APPENDIX F

Torsional Rigidity (Spring Rate)

E. R. Wagner, P.E. — Saginaw Steering Gear Div., GMC

In drivetrain system design, the resulting overall torsional rigidity or stiffness can be of considerable importance in meeting the application requirements. The driveline serves as a relative torsionally elastic subsystem in a typical vehicle power train system and its torsional rigidity or spring rate can be determined with reasonable accuracy only by laboratory test of a complete assembly. However, in the design stage, it may be desirable or necessary to analytically estimate the torsional rate of proposed individual components and predict their effect on the entire system.

This analytical procedure can be accomplished most readily by the equivalent shafts method. For a uniform circular shaft, the total angle of twist in radians is:

$$\theta = \frac{TL}{GI_p} \qquad \text{Eq. F-1}$$

where:

T = Torque, lb-in
L = Length of shaft, in
G = Modulus of rigidity, psi
I_p = Polar moment of inertia of the cross section, in^4

Hence, the torsional rigidity or spring rate which is defined as the torque required to produce one radian of angular displacement is:

$$k = \frac{T}{\theta} = \frac{GI_p}{L} \qquad \text{Eq. F-2}$$

For a solid shaft, the torsional rigidity is:

$$k = \frac{\pi d^4 G}{32L} \qquad \text{Eq. F-3}$$

where:

d = Shaft diameter, in

For a hollow shaft the torsional rigidity is:

$$k = \frac{\pi (d_o^4 - d_i^4)G}{32L} \qquad \text{Eq. F-4}$$

where:

d_o = Outside diameter, in
d_i = Inside diameter, in

When the shafting is not of uniform diameter or cross section throughout its length, it is often convenient to replace each different section of the actual shafting by an equivalent length of shaft of some suitable reference diameter. For a solid shaft:

L = Length of actual shaft of diameter d
L_e = Length of equivalent shaft of reference diameter d_e

Then from Equation F-3, the actual and equivalent shafts will possess the same torsional rigidity when:

$$\frac{d^4}{L} = \frac{d_e^4}{L_e}$$

For a solid shaft the equivalent length is:

$$L_e = \frac{Ld_e^4}{d^4} \qquad \text{Eq. F-5}$$

Similarly from Equation F-4 for a hollow shaft with outer and inner diameters d_o and d_i, respectively, the equivalent length is:

$$L_e = \frac{Ld_e^4}{d_o^4 - d_i^4} \qquad \text{Eq. F-6}$$

When, as usual in practice, there are several shafts or other flexible elements in series, the overall torsional rigidity of the assembly is obtained as follows:

$\sum L_e$ = Equivalent length of complete assembly

$$= (L_a + L_b + L_c + \ldots + L_n),$$

where:

L_a, L_b, etc., are the equivalent lengths of the individual elements all reduced to the same reference diameters d_e.

Then:

$\sum k$ = Overall torsional rigidity

$$= \frac{\pi d_e^4 G}{32 \sum L_e} \qquad \text{Eq. F-7}$$

also, let:

$$k_a = \frac{\pi d_e^4 G}{32 L_a}$$

$$k_b = \frac{\pi d_e^4 G}{32 L_b}$$

etc.,

where:

American Axle v. Neapco - IPR2025-00091
PET_AAM_1012-0401

k_a, k_b, etc., are the torsional rigidities of the various sections of the shafting.

Then from Equation F-7: Eq. F-8

$$\frac{1}{\sum k} = \left(\frac{1}{k_a} + \frac{1}{k_b} + \ldots + \frac{1}{k_n}\right)$$

This expression enables the overall rigidity of a number of shafts in series to be determined from the torsional rigidities of the individual elements.

In some power train systems, the shafts may also be in a parallel arrangement. In this case, the overall torsional rigidity is simply the sum of the torsional rigidities of the elements as follows:

$$\sum k = (k_a + k_b + k_c + \ldots + k_n) \qquad \text{Eq. F-9}$$

Also, from Equation F-7: Eq. F-10

$$\frac{1}{\sum L_e} = \left(\frac{1}{L_a} + \frac{1}{L_b} + \frac{1}{L_c} + \ldots + \frac{1}{L_n}\right)$$

where:

L_a, L_b, etc., are the equivalent lengths of the various elements all reduced to the same reference diameter d_e.

References

1. W. Ker Wilson, "Practical Solution of Torsional Vibration Problems," *Frequency Calculations*, Vol. 1, 3rd ed. New York: John Wiley and Sons, Inc., 1956.

APPENDIX G

Joint Angle Capabilities of End Motion Universal Joints

E. R. Wagner, P. E. — Saginaw Steering Gear Div., GMC

The joint angle design characteristics of a typical end motion universal joint can be best described and shown on a chart where the maximum design angular capability is plotted for all axial stroke positions as shown in Fig. G-1. The chart shows that the range of angular deflection is limited by the joint construction in the different relative axial positions of the inner and outer members. The shape of this chart can vary considerably depending on the design features of the different types of end motion joints.

For a specific application, the maximum operating angles at all possible positions of axial stroke can be plotted with respect to a given zero design position of the joint center as shown by the typical curve in Fig. G-1. Thus the proposed joint design, because of its construction, must provide sufficient angular capability for all the required operating positions as well as clearances necessary to accommodate component manufacturing and installation assembly tolerances. Due to these tolerances, it is apparent that a family of curves is possible in a given application. Therefore, the chart limit lines must provide a safety margin so that with the tolerances occurring in practice, the limit lines are not reached and the joint functions satisfactorily in all operating conditions.

In some types of end motion joints, the zero design position may be determined by a joint's specific design characteristics. In other joint designs, the location of the zero design position is arbitrary and may be shifted if, for example, a particular joint is proposed for various applications with different angulation and axial motion requirements. This relocation of the joint center is permissible provided that the operating and assembly requirements of the intended application can be accommodated within the limit lines of the chart, while still being able to meet all other application parameters.

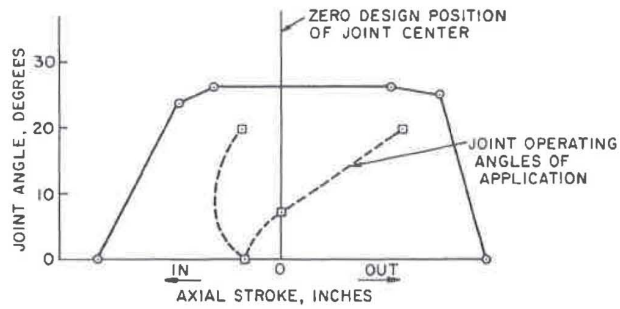

Fig. G-1 — Angular capability of typical end motion universal joint

For an end motion joint, it is common practice to locate the zero design position of the joint center with respect to some suitable reference point on the joint outer member. This point may be a typical flange face, stub shaft end, or other location depending on the joint design. In addition, this joint center is also located with reference to the center of the universal joint used at the opposite end of a typical driveshaft using two joints.

American Axle v. Neapco - IPR2025-00091
PET_AAM_1012-0403

APPENDIX H

Bending Moment (Secondary Couple) Analysis of Ball Type Constant Velocity Universal Joints

E. R. Wagner, P. E. — Saginaw Steering Gear Div., GMC

Whenever the direction of the transmitted torque is changed in a mechanical device, such as a constant velocity universal joint operating at an angle, a bending moment is produced by this change in direction of torque. This bending moment is called a *secondary couple* to distinguish it from the primary driving or torque transmitting couple.

Fig. H-1 shows a simplified general case of a ball type constant velocity joint operating at an angle. The joint is assumed to have two drive balls which are located in diametrically opposed and axially straight ball grooves of the joint driving and driven members. These balls are spaced at a radius r from the rotational axis of the driving and driven members and the diametrical distance between the two balls is thus, d = 2r. The two balls are assumed to be positioned in the constant velocity, or bisecting angle plane, at points 1 and 2 as shown when the driving and driven member rotational centerlines are displaced at joint angle θ in the plane of the paper. When torque T is applied to the driving member and resisted by an equal and opposite torque T_1 on the driven member, the values of the secondary couples can be determined as follows:

$$T = T_1 \text{ (Constant in constant velocity joint)}$$

Then:

$$F = \frac{T}{d}$$

where:

$$F = \text{Force producing torque at each ball}$$

Secondary Couple on Driving Member

$$C = F\left(d \tan\frac{\theta}{2}\right) = \left(\frac{T}{d}\right) d \tan\frac{\theta}{2}$$

$$C = T \tan\frac{\theta}{2}$$

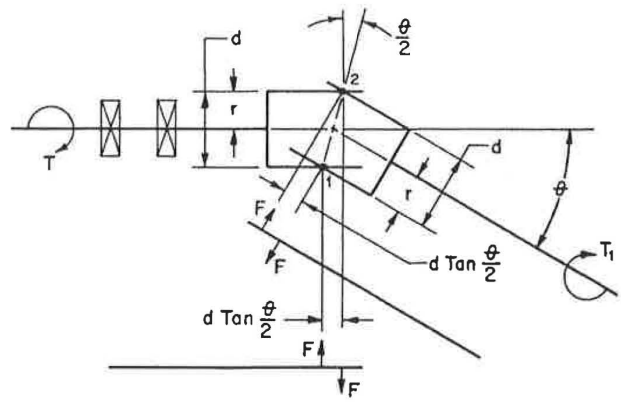

Fig. H-1 — Simplified ball type constant velocity universal joint

Secondary Couple on Driven Member

$$C_1 = F\left(d \tan\frac{\theta}{2}\right) = \left(\frac{T}{d}\right) d \tan\frac{\theta}{2}$$

$$C_1 = T \tan\frac{\theta}{2}$$

Thus when transmitting torque at an angle, a secondary couple is produced on both driving and driven members of the joint. When driving contact is maintained through the constant velocity or bisecting angle plane, the couple forces react as constant or static nonvibrating forces only on the bearing supports. The secondary couples are a function of the torque and joint angle only. These couples are of the same magnitude on both driving and driven members and are normal or perpendicular to the joint angle plane. For a given torque direction and disposition of the joint angle, both couples are sensed in the same clockwise or counterclockwise direction.

American Axle v. Neapco - IPR2025-00091
PET_AAM_1012-0405

APPENDIX I

Universal Joint Rating Procedure

E. R. Wagner, P.E. — Saginaw Steering Gear Div., GMC

Since there are many types of universal joints, the procedure for rating and comparing these joints can vary depending on their specific design characteristics. In general, a fixed center type of joint can be rated according to its static and operating capabilities in terms of such design parameters as torque, speed, and joint angle. The joint's torque capacity is usually stated as the maximum static torque, which is the maximum permissible statically applied torque at a zero degree joint angle and is safely below the ultimate strength of the joint. The ultimate strength is the maximum applied torque at which failure of any one of its components will occur. Depending on the requirements of a specific application, a maximum recommended operating torque is permitted for a short duration or intermittently at a specified maximum operating angle and at a relatively low speed. Also, the maximum recommended operating speed with no torque load is permitted at a zero degree joint angle or at a recommended continuous operating angle.

Life expectancy ratings for the joint can be established through testing and analytical procedures. The determination of joint life can be facilitated with the aid of a duty cycle described in the chapter on *Basic Driveline Requirements,* and with applicable rolling element bearing relationships listed in *Appendix B*. A typical life rating can then be specified, if desired, in hours or revolutions at a given torque, speed, and joint angle.

When an end motion type of joint is considered, the procedure for rating this joint must also include its axial movement characteristic in addition to such design parameters as torque, speed, and joint angle.

For example, for short duration or intermittent operating conditions, the specified maximum operating angle must be safely within the limits of the joint angle versus axial stroke chart described in *Appendix G*.

As previously indicated, the procedure for rating joints can vary depending on their specific design characteristics. For example, in a Cardan type of joint employing needle rollers as the rolling elements, the term *bearing factor,* as described in the section on the *Cardan or Hooke Universal Joint,* is also utilized in rating and joint size determination.

The torque load which can be transmitted by multiple ball type of constant velocity joints depends on a number of interrelated factors as follows:

a. Number of load-carrying balls
b. Size of the balls
c. Ball circle or torque radius of the balls
d. Angle between the tangential torque load component on the ball at the ball circle radius and the load component normal to the groove contact point
e. Normal load per ball
f. Ball groove conformity which is the ratio of the groove radius to the ball diameter
g. Permissible Hertz contact stress

From these factors, it can be seen that when rating ball type joints of congruent or geometrically similar designs, the allowable torque loads are determined by the number and size of the load-carrying balls and their distance from the joint rotational axis. In accordance with ball bearing practice, the permissible crushing load of the balls and the allowable contact stress varies approximately with the square of the ball diameter. Since the ball circle radius at which the ball operates in the joint is also, by conditions of the design, a multiple of its diameter, the permissible torque load is proportional to the cube of these linear dimensions.

The approximate torque load capacity can, be expressed mathematically in the form of a *capacity factor* as follows:

$$\text{Capacity Factor} = n \times BCR \times d^2$$

where:

n = number of balls
BCR = Ball circle radius, in
d = Ball diameter, in

Therefore, in a family of geometrically similar joints which have the same number of balls, this relationship indicates that a comparison of approximate torque load capacities of different size joints varies simply as the product of the ball circle radius, and the square of the ball diameter.

For ball type joints, allowable ball contact pressures have been experimentally determined with due regard to the ball groove conformity, surface stresses, and stress repetitions. With increasing joint angles, at a given constant torque, the contact loads must be reduced in order to maintain a given life expectancy. Since a combination of rolling and sliding of the balls occurs in the joint, the conditions of ball loading differ considerably over those encountered in ball bearings. Sliding of the ball influences the life of the joint and must be taken into account when the dynamic capacity is being considered. The dynamic capacity is thus based on the fatigue life under repeated stress applications, and not as in static conditions, on permanent deformation or fracture under load. The life is inversely proportional to the speed and the third power of the continuous torque.

Universal joints are used not only in driveshaft applications requiring periodic or intermittent joint angle changes, but also in fixed angle driveshaft systems. When a joint is used in a fixed angle drive, the continuous torque rating for the joint

American Axle v. Neapco - IPR2025-00091
PET_AAM_1012-0407

must be used to select the proper joint size and an empirically determined angular correction factor must be applied to determine the allowable speed and joint angle combination.

References

1. A. H. Rzeppa, "Universal Joint Drives," *Machine Design*, April, 1953, pp. 2-10.

2. P. J. Mazziotti, *Dynamic Characteristics of Truck Driveline Systems*, Published in SAE SP-262, 1964.

3. J. W. Macielinski, "Propeller Shafts and Universal Joints — Characteristics and Methods of Selection," *Drive Line Engineering*, Book I, Paper 29, The Institution of Mechanical Engineers, 1972, pp. 516-543.

American Axle v. Neapco - IPR2025-00091
PET_AAM_1012-0408

APPENDIX J

Mass Polar Moment of Inertia

E. R. Wagner, P.E. — Saginaw Steering Gear Div., GMC
C. E. Cooney — Mechanics Div., Borg Warner Corp.

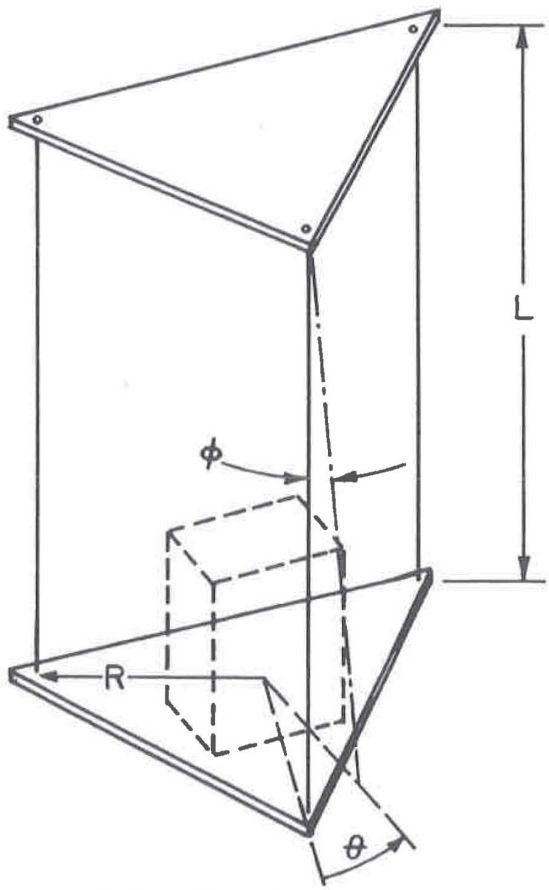

Fig. J-1 — Three-string torsional pendulum

In order to perform certain drivetrain computations, it may be necessary to know the value of the mass polar moment of inertia of a particular component. When a component consists of simple geometric shapes, it is possible to compute this inertia by the use of well known equations. The simple configurations, however, are not often encountered in engineering practice and in such cases experimental methods are very useful. For drivetrain analysis procedures, the torsional pendulum and the string and weight methods will in general suffice for the majority of cases commonly encountered and are described as follows:

Three-String Torsional Pendulum Method

The three-string torsional pendulum consists of a platform supported by three strings equally spaced about its center as

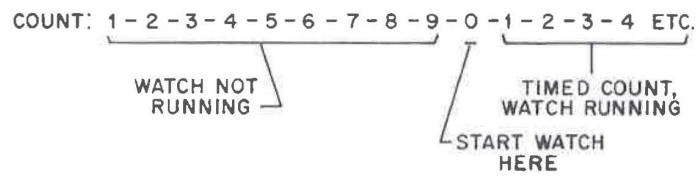

Fig. J-2 — Suggested method for timing oscillations

shown in Fig. J-1. The component is placed on the platform so that its center of gravity coincides with the center of the platform. The platform and component are then oscillated through a small torsional angle in the horizontal plane.

If the oscillations are limited to small angles and the strings are of reasonable length, the vertical displacement of the platform can be neglected. Any pendulum utilizes the principles of harmonic or sinusoidal motion to determine the moment of inertia of a given mechanical component.

For most components, the center of gravity must be located before the moment of inertia can be determined. The center of gravity can generally be found with sufficient accuracy by balancing the component on a pin point. The point at which it balances is the center of gravity.

Timing the oscillations to obtain the frequency of the pendulum can also present some problems. Small oscillations are not easy to count and considerable error can be introduced if this procedure is not carefully done. Starting the stop watch and the count at the proper time is often difficult and it is suggested that the count be started before starting the watch so as to get the proper rhythm as shown in Fig. J-2. Timing the oscillations for any one component should be repeated until at least three readings with reasonable agreement are obtained. Fifty cycles is often a reasonable number of cycles to time.

Since the pendulum describes a harmonic motion, the count of these cycles should be made at one end of the angular displacement where the velocity is zero. A cycle consists of one complete oscillation which ranges from one extreme end to the other end, and then back again. The time required to complete this cycle is called a period.

For the three-string torsional pendulum, the following equation has been derived to determine the moment of inertia:

$$J = \frac{R^2 W}{4\,\pi^2 f_n^2 L}$$

American Axle v. Neapco - IPR2025-00091
PET_AAM_1012-0409

where:

J = Combined mass polar moment of inertia of component and platform about the center of gravity, lb-in-s^2
R = Distance from center of platform to any string, in
W = Combined weight of component and platform, lb
f_n = Frequency of oscillation of pendulum, cps or Hz
L = Length of string, in

To properly use the three-string torsional pendulum, the weight and moment of inertia of the empty platform should first be determined. The process can then be repeated using the combined weight of the platform and mechanical component and obtaining the combined moment of inertia. The moment of inertia for the component only can, hence, be determined by subtracting the moment of inertia of the empty platform from the combined moment of inertia. It is best if the moment of inertia of the platform is small in comparison to the inertia of the mechanical component so that a sizeable difference exists between the combined moment of inertia and that of the empty platform. Otherwise small errors in these two moments of inertia will result in a large error in their difference.

Illustrative Problem

The mass polar moment of inertia is to be determined about its rotational axis for a typical front Cardan universal joint used in a passenger car driveshaft. Initially, the inertia of the platform itself must be determined from the following pendulum data:

$L = 102$ in
$R = 4$ in
$W_p = 0.45$ lb

When the platform was oscillated torsionally, its period was timed at 1.882 s average. The frequency of the oscillation is the reciprocal of this period as follows:

$$f_n = \frac{1}{1.882} = 0.531 \text{ cps (Hz)}$$

Therefore, the mass polar moment of inertia of the empty platform is:

$$J_p = \frac{R^2 W_p}{4\pi^2 f_n^2 L}$$

$$= \frac{(4)^2 \times 0.45}{4(\pi)^2 \times (0.531)^2 \times 102}$$

$$J_p = 0.00634 \text{ lb-in-s}^2$$

Then, the universal joint weighing 5.74 lb was placed on the platform so that its center of gravity coincided with the center of the platform. The pendulum was oscillated and its period was timed at 1.090 s average. The frequency of the oscillation is the reciprocal of this period as follows:

$$f_n = \frac{1}{1.090} = 0.9174 \text{ cps (Hz)}$$

Thus, the combined mass polar moment of inertia of the universal joint and the platform is:

$$J = \frac{R^2 W}{4\pi^2 f_n^2 L}$$

$$= \frac{(4)^2 \times (5.74 + 0.45)}{4(\pi)^2 \times (0.9174)^2 \times 102}$$

$$J = 0.02922 \text{ lb-in-s}^2$$

Hence, the mass polar moment of inertia of the front Cardan universal joint is determined by subtracting the moment of inertia of the empty platform from the combined moment of inertia as follows:

$$J_{uj} = J - J_p$$
$$= 0.02922 - 0.00634$$
$$J_{uj} = 0.02288 \text{ lb-in-s}^2$$

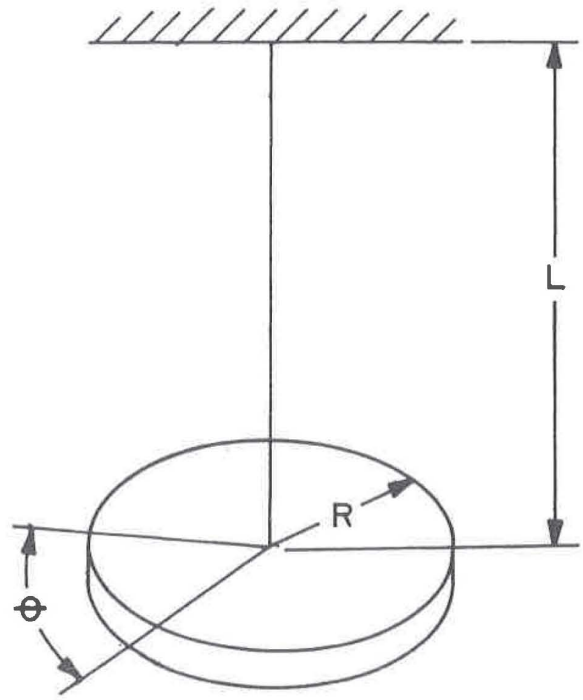

Fig. J-3 — Single wire torsional pendulum

Single Wire Torsional Pendulum Method

The single wire torsional pendulum shown in Fig. J-3 consists of an inertia disc supported at its center of oscillation by

American Axle v. Neapco - IPR2025-00091
PET_AAM_1012-0410

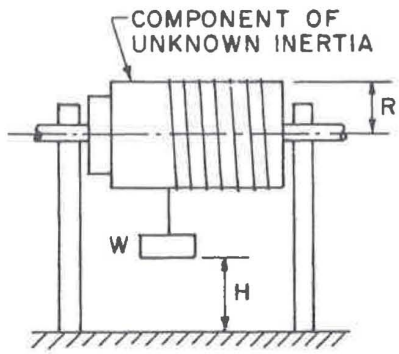

Fig. J-4 — Rotating component with string and weight

a suspended wire. For this simple torsional pendulum, the following equation has been derived to determine the moment of inertia of the disc:

$$J_d = \frac{d^4 G}{128\,\pi\, f_n^2 L}$$

where:

J_d = Mass polar moment of inertia of disc, lb-in-s²
d = Wire diameter, in
G = Modulus of rigidity or shear modulus of wire material, psi
f_n = Frequency of oscillation of pendulum, cps or Hz
L = Length of wire, in

Also, when a simple solid disc is used, the moment of inertia can be computed with the following basic equation:

$$J_d = \frac{1}{2}\,\frac{WR^2}{g}$$

where:

W = Weight of disc, lb
R = Radius of disc, in
g = Acceleration due to gravity, 386.4 in/s/s

When the equation for the single wire torsional pendulum is examined, it is noted that when a given pendulum is used to determine the moment of inertia of various components, the inertias are inversely proportional to the square of the frequencies of oscillation. Since the frequency is the reciprocal of the period, the following convenient relationship can be developed:

$$J = \frac{T^2 J_d}{T_d^2}$$

where:

J = Combined mass polar moment of inertia of component and disc, lb-in-s²
T = Period of oscillation of component and disc, s
J_d = Mass polar moment of inertia of disc, lb-in-s²
T_d = Period of oscillation of disc, s

String and Weight Method "A"

The string and weight is also a commonly used method for determining the moment of inertia of rotating components as shown in Fig. J-4. In the first of two string and weight methods to be described, a light string is wrapped around the component of unknown inertia which is supported in bearings, and a known weight is attached to the string. By accurately measuring the time required for the weight to fall a known distance from its point of release, the moment of inertia of the rotating component can be established.

For the string and weight method, the following equation has been derived to determine the moment of inertia:

$$J = \left[\frac{t^2}{H} - \frac{2}{g}\right]\frac{WR^2}{2}$$

where:

J = Mass polar moment of inertia of rotating component, lb-in-s²
H = Distance weight falls, in
t = Time for weight to fall distance H from time of release, s
g = Acceleration due to gravity, 386.4 in/s/s
W = Falling weight, lb
R = Radius of surface on which string is wrapped, in

In this equation, it is assumed that there is no stiffness in the string and that friction is neglected. If there is so much friction that it cannot be neglected, which is generally the case, it can be measured by experimentally determining what magnitude of weight will fall at a constant velocity, thus just overcoming friction. This amount of weight can then be subtracted from the weight to be used in the previous equation. Also, the distance that the weight falls should be sufficient so that the timing can be accomplished with reasonable or consistent accuracy.

Illustrative Problem

The mass polar moment of inertia is to be determined for a typical passenger car driveshaft, which consists of a 3.00 in diameter tube with a Cardan universal joint at each end. Since the front Cardan joint incorporates a typical outboard slip yoke, a common hose clamp is fastened around this joint in order to maintain it at zero degree joint angle when the shaft is supported in bearings and rotated. Thus, the moment of inertia obtained is the combined moment of inertia of the driveshaft and the hose clamp.

Initially, it was determined that a weight of 0.469 lb was required to just overcome friction and permit this weight to

fall at constant speed while the shaft rotated. This weight was attached to a string which was wrapped around the tube diameter. Then, when a test weight of 1.115 lb was used, the average time for the weight to fall 120 in was found to be 4.157 s. Therefore, the combined mass polar moment of inertia of the driveshaft and the hose clamp is:

$$J = \left[\frac{t^2}{H} - \frac{2}{g} \right] \frac{WR^2}{2}$$

where:

$$t = 4.157 \text{ s}$$
$$H = 120 \text{ in}$$
$$g = 386.4 \text{ in/s/s}$$
$$W = 1.115 - 0.469 = 0.646 \text{ lb}$$
$$R = \frac{3.00}{2} = 1.50 \text{ in}$$

hence:

$$= \left[\frac{(4.157)^2}{120} - \frac{2}{386.4} \right] \frac{0.646 \times (1.50)^2}{2}$$

$$J = 0.10089 \text{ lb-in-s}^2$$

The mass polar moment of inertia of the hose clamp is:

$$J_{hc} = \frac{WR^2}{g}$$

where:

$$W = 0.075 \text{ lb}$$

$$R = 1.90 \text{ in}$$

hence:

$$= \frac{0.075 \times (1.90)^2}{386.4}$$

$$J_{hc} = 0.00070 \text{ lb-in-s}^2$$

Hence, the mass polar moment of inertia of the driveshaft is determined by subtracting the moment of inertia of the hose clamp from the combined moment of inertia as follows:

$$J_{ds} = J - J_{hc}$$
$$= 0.10089 - 0.00070$$
$$J_{ds} = 0.10019 \text{ lb-in-s}^2$$

String and Weight Method "B"

A second string and weight method can also be used for determining the moment of inertia of rotating components as shown in Fig. J-5. In this method, the component of unknown inertia and an attached drum are supported in bearings. A light string is wrapped around the drum and a known weight is attached to the end of this string. The time required for the weight to fall a known distance from the point of release to the floor is accurately measured. Upon hitting the floor, the shaft continues to rotate and unrolls an additional length of string before coming to rest. This additional rotation is dependent on the friction in the system.

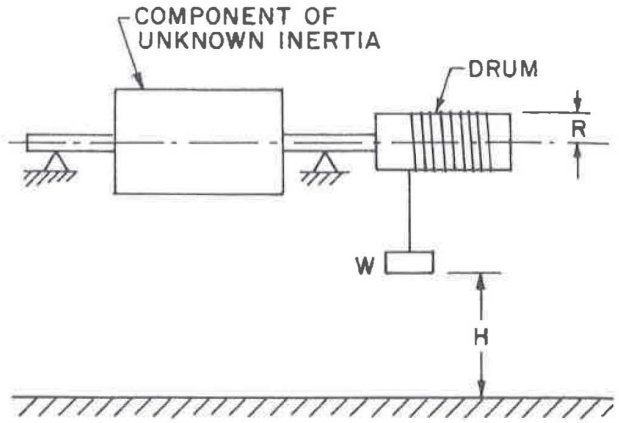

Fig. J-5 — Rotating component and drum with string and weight

For this second string and weight method, the following equation has been derived to determine the moment of inertia:

$$J = \frac{W\left[H - \frac{2H^2}{gt^2} \right]}{\frac{2H^2}{R^2t^2}\left[1 - \frac{H}{S} \right]}$$

where:

J = Combined mass polar moment of inertia of component and drum, lb-in-s²
W = Falling weight, lb
H = Distance weight falls to floor, in
t = Time for weight to fall distance H from time of release, s
R = Radius of drum on which string is wrapped, in
S = Excess length of string which unrolls from the drum while the component and drum rotating system decelerates under influence of friction after W has hit the floor, in

The moment of inertia of the component only, hence, can be determined by subtracting the moment of inertia of the drum from the combined moment of inertia. When a component of unknown inertia only and without an attached drum is supported in bearings as shown in Fig. J-4, the second string and weight method can be used equally well in determining the moment of inertia.

Typical Passenger Car Driveshaft and Universal Joint Moment of Inertias

For reference purposes, moment of inertia values of typical passenger car driveshafts and universal joints with their corresponding weights are tabulated as follows:

American Axle v. Neapco - IPR2025-00091
PET_AAM_1012-0412

	Mass Polar Moment of Inertia, lb-in-s²	Weight, lb
Driveshaft with 3.00 in O.D. × 0.065 in wall tubing and a Cardan joint at each end	0.10019	17.00
Front Cardan joint for above driveshaft with typical slip and weld yokes	0.02288	5.74
Rear Cardan joint for above driveshaft with a typical weld yoke only	0.01428	2.86
Driveshaft with 3.50 in O.D. × 0.065 in wall tubing and a double Cardan joint at each end	0.18824	33.00
Front double Cardan joint for above driveshaft with typical slip and weld yokes	0.05279	12.22
Rear double Cardan joint for above driveshaft with typical weld and flange yokes	0.06339	11.06

References

1. E. J. Nestorides, *A Handbook on Torsional Vibration*, British Internal Combustion Engine Research Association Research Laboratory, Cambridge at the University Press, 1958.
2. C. E. Cooney, *Design and Application of Universal Joints for Off-Highway Vehicles*, SAE Paper 650681, 1965.
3. F. E. Fisher, *Instrumentation for Mechanical Analysis*, The University of Michigan Engineering Summer Conferences, June 2-13, 1968.

APPENDIX K

Basic Mathematics For Cardan Universal Joint Problems

A. H. Berker — Ford Motor Co.

The application of approximate equations relative to driveline analysis is fully detailed in the section on the *Cardan or Hooke Universal Joint*. This appendix merely presents a simplified derivation of the basic relationships.

Equation of Motion

In the *Cardan or Hooke Universal Joint* section, the fundamental equation governing the dynamic behavior of this joint is given as follows:

$$\omega_1 = \frac{\omega \cos \theta}{1 - \sin^2 \beta \sin^2 \theta} \qquad \text{Eq. K-1}$$

where:

ω_1 = Instantaneous angular velocity of driven shaft or yoke, rad/s
ω = Constant angular velocity of driving shaft or yoke, rad/s
θ = Joint angle, deg
β = Angle of rotation of driving yoke from a position where it is normal to the plane of the joint angle, deg

Angle β may also be measured from a position where the driving yoke is in the plane of the joint angle. In that case, the previous expression is given as:

$$\omega_1 = \frac{\omega \cos \theta}{1 - \cos^2 \beta \sin^2 \theta} \qquad \text{Eq. K-2}$$

Both Eqs. K-1 and K-2 would yield the same numerical results. First consider the position of the driving yoke where it lies in the plane of the joint angle.

Then $\beta = 0$ deg, $\cos \beta = 1$ and,

$$\omega_1 = \frac{\omega}{\cos \theta} \quad \text{in Eq. K-2}$$

Now consider the position of the driving yoke when $\beta = 90$ deg.

Then $\cos \beta = 0$ and,

$$\omega_1 = \omega \cos \theta \text{ in Eq. K-2}$$

Finally, there is an intermediate position of the driving yoke for which $\omega_1 = \omega$.

$$\text{Then } \frac{\cos \theta}{1 - \cos^2 \beta \sin^2 \theta} = \frac{\omega_1}{\omega} = 1$$

$$\text{or} \quad \tan \beta = \sqrt{\cos \theta}$$

For joint angles up to 20 deg, the solution is $\beta = 44$ deg to 45 deg.

From the preceding expressions it appears that the angular velocity of the driven shaft changes from a maximum to a mean and then to a minimum. Since this occurs for a 90 deg constant speed rotation of the driving yoke, the driven shaft is therefore required to speed up and slow down twice for each revolution of the driving yoke.

The equation of this fluctuating motion of the driven shaft is derived from Eq. K-2 to be:

$$\epsilon = \beta + \frac{K}{2} \sin 2\beta + \frac{K^2}{8} \sin 4\beta, \text{ rad} \qquad \text{Eq. K-3}$$

where:

$$K = \frac{\sin^2 \theta}{2 - \sin^2 \theta}$$

In practical joint angle problems, angle θ is relatively small. Therefore K may be approximated to $\frac{\theta^2}{2}$ in these cases. It should be noted that for $K = \frac{\theta^2}{2}$, θ is expressed in radians.

Substituting K in Eq. K-3 yields:

$$\epsilon = \beta + \frac{\theta^2}{4} \sin 2\beta + \frac{\theta^4}{32} \sin 4\beta \qquad \text{Eq. K-4}$$

This relationship describes the fluctuating motion of a shaft driven through joint angle θ by a driving yoke that has moved through angle β at constant angular velocity ω.

Torsional Vibration of the Driven Shaft

Amplitude of Vibration

Eq. K-4 indicates that ϵ is composed of two components, one steady and one periodic. The steady component is β and the periodic component is $\frac{\theta^2}{4} \sin 2\beta + \frac{\theta^4}{32} \sin 4\beta$.

Subtracting β from Eq. K-4 will, therefore, yield the torsional vibration motion:

$$\gamma = \frac{\theta^2}{4} \sin 2\beta + \frac{\theta^4}{32} \sin 4\beta \qquad \text{Eq. K-5}$$

American Axle v. Neapco - IPR2025-00091
PET_AAM_1012-0415

For practical joint angles θ, the second term $\frac{\theta^4}{32}$ sin 4 β is considered negligible. Neglecting this term, Eq. K-5 yields:

$$\gamma = \frac{\theta^2}{4} \sin 2\beta$$

γ is maximum where sin 2 β = 1. Therefore, for practical purposes, the amplitude of torsional vibration is:

$$A = \frac{\theta^2}{4} \qquad \text{Eq. K-6}$$

This equation is developed in the *Cardan or Hooke Universal Joint* section.

Angular Acceleration

The angular rotation of the driving yoke may be expressed as:

$$\beta = \omega t$$

where:

t = Time, s

Substituting in Eq. K-5 and then differentiating twice with respect to t, yields:

$$\alpha_1 = -\omega^2 \left(\theta^2 \sin 2\beta + \frac{\theta^4}{2} \sin 4\beta\right)$$

where:

α_1 = Angular acceleration of driven yoke or shaft, rad/s/s

The second term $\frac{\theta^4}{2}$ sin 4β is relatively small and, therefore, may be neglected.
Hence:

$$\alpha_1 = -\omega^2 \theta^2 \sin 2\beta$$

with:

$$\alpha_{1(max)} = +\omega^2 \theta^2$$

and:

$$\alpha_{1(min)} = -\omega^2 \theta^2$$

further:

$$\alpha_{1(max)} = \omega^2 \theta^2 = \omega^2 4 \frac{\theta^2}{4} \qquad \text{Eq. K-7}$$

The term $\frac{\theta^2}{4}$ = A, as shown in Eq. K-6, and by substituting in Eq. K-7 yields:

$$\alpha_{1(max)} = 4A\omega^2 \qquad \text{Eq. K-8}$$

Vibratory Torque

The fluctuating torque that is acting on the driven shaft is:

$$T = J \alpha_1$$

where:

J = Mass moment of inertia of the driven shaft

α_1 = Angular acceleration of the driven shaft

Therefore, the vibratory or maximum torque is:

$$T_{max} = J \alpha_{1(max)} \qquad \text{Eq. K-9}$$

Typical Problem

Two shafts are connected by a Cardan joint where the joint angle is 5 deg. The driving shaft rotates at a constant speed N of 1000 rpm. The mass moment of inertia of the driven shaft is equivalent to that of a flywheel having a diameter D of 6 in and a weight W of 40 lb. Compute the amplitude of torsional vibration, the maximum angular acceleration of the driven shaft, and the maximum vibratory torque. Then determine the percent error inherent with the use of the approximate equations.

From Eq. K-6:

$$A = \frac{\theta^2}{4}$$

where:

$$\theta = 5 \text{ deg} = \frac{5 \times 2\pi}{360} = 0.0873 \text{ rad}$$

since 2 π rad equals 360 deg.
Hence,

$$A = \frac{(0.0873)^2}{4} = 0.001905 \text{ rad}$$

or,

$$A = \frac{0.001905 \times 360}{2\pi} = 0.1091 \text{ deg}$$

From Eq. K-8:

$$\alpha_{1(max)} = 4A\omega^2$$

where:

$$\omega = \frac{2\pi N}{60} = \frac{2\pi \times 1000}{60} = 105 \text{ rad/s}$$

Hence,

$$\alpha_{1(max)} = 4A\omega^2 = 4 \times 0.001905 \times (105)^2$$

$$\alpha_{1(max)} = 84.01 \text{ rad/s/s}$$

From Eq. K-9:

$$T_{max} = J \alpha_{1(max)}$$

When expressed in terms of the diameter, the mass moment of inertia is:

$$J = \frac{WD^2}{8g}$$

where:

g = Acceleration due to gravity, 386.4 in/s^2

Therefore:

$$J = \frac{40 \times (6)^2}{8 \times 386.4} = 0.466 \text{ lb-in-s}^2$$

American Axle v. Neapco - IPR2025-00091
PET_AAM_1012-0416

Hence:

$$T_{max} = 0.466 \times 84.01 = 39.15 \text{ lb-in}$$

The true values for A, $\alpha_{1(max)}$ and T_{max} were then determined on the basis of Eq. K-3. The approximate and true values of these parameters are tabulated in Table K-1, together with the percent error. This table tends to support the fact that the use of approximate equations would produce a negligible error in practical joint angle problems.

Table K-1 — Dynamic Characteristics

	Computed Values		
	Approximate	True	Percent Error
Amplitude of Torsional Vibration, deg	0.1091	0.1093	0.18
Maximum Angular Acceleration, rad/s/s	84.01	84.50	0.58
Maximum Torque, lb-in	39.15	39.36	0.53

References

1. W. Ker Wilson, "Practical Solution of Torsional Vibration Problems," *Amplitude Calculations*, Vol. 2, 3rd ed. London: Chapman and Hall, Ltd., 1963, pp. 299-308.

APPENDIX L
Useful Design Aids

E. R. Wagner, P.E. — Saginaw Steering Gear Div., GMC

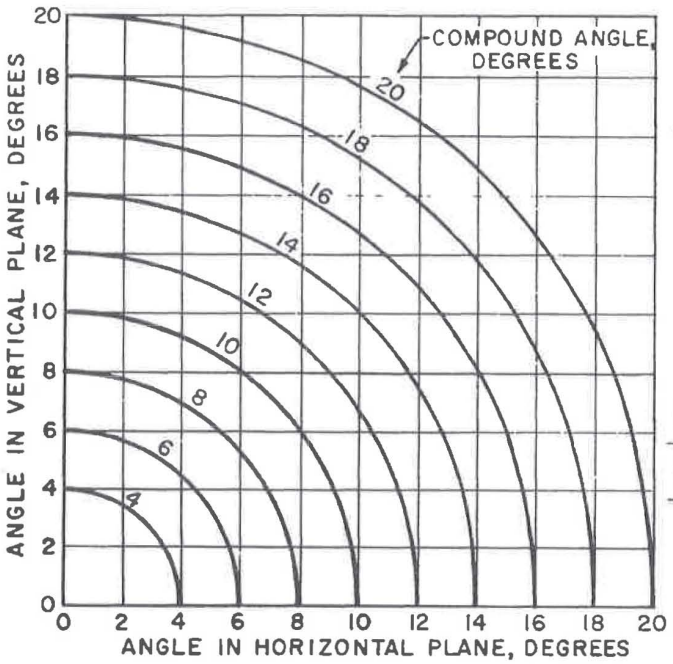

Fig. L-1 — Compound angle chart

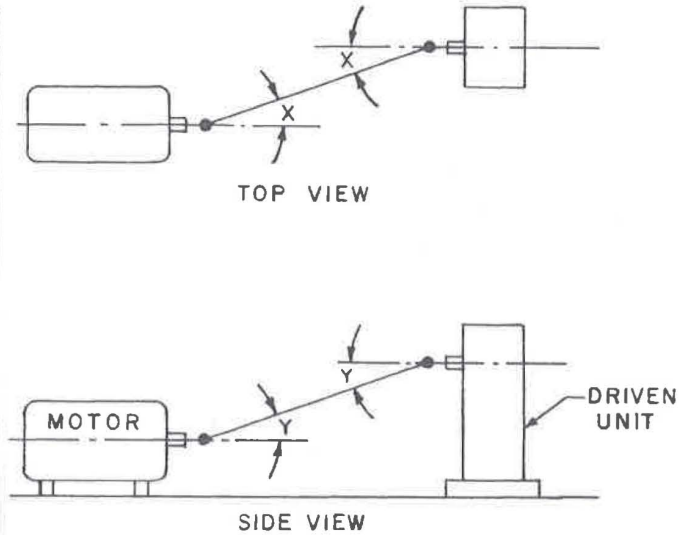

Fig. L-2 — Universal joint drive system

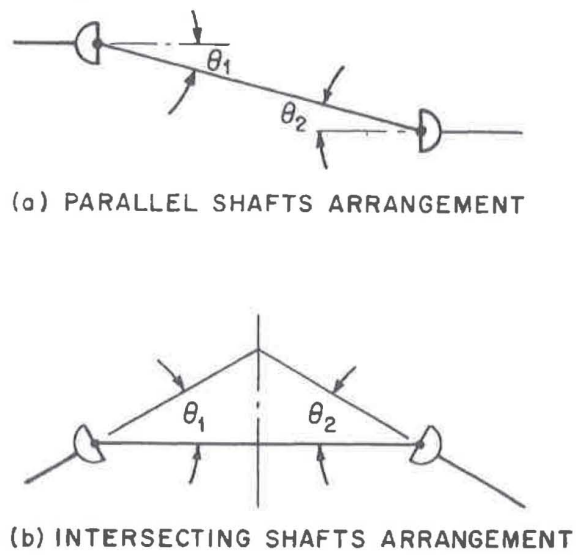

Fig. L-3 — Two-joint driveshaft with all shafts in a common plane

True (Compound) Joint Angle

In the design of universal joint drive systems, the true or compound joint angles must be known so that the universal joint operating characteristics of the system can be analyzed for a given application. The true joint angles can be estimated from Fig. L-1 if the horizontal and vertical components are known. For example, consider a universal joint drive system from a motor to a driven unit as shown in Fig. L-2. The driven unit's input shaft is parallel to the motor shaft. Then, if angle X is 6 deg and angle Y is 8 deg, the true or compound angle from Fig. L-1 is 10 deg approximately.

Phasing of Cardan Universal Joints

A two-joint driveshaft using Cardan joints can be operated in an application and produce constant output angular velocity when proper yoke phasing is provided with equal joint angles. Fig. L-3 illustrates two driveshaft arrangements where the input and output shafts as well as the intermediate or connecting shaft all lie in a common plane. Fig. L-3(a) shows the parallel shafts arrangement where the input and output shaft centerlines, when extended, intersect at infinity and thus joint angles θ_1 and θ_2 are equal. Therefore, when the two yokes on the connecting shaft are installed in the same plane as shown (parallel or zero degree phasing) uniform angular velocity is transmitted since the second joint cancels the nonuniform motion characteristics of the first joint.

American Axle v. Neapco - IPR2025-00091
PET_AAM_1012-0419

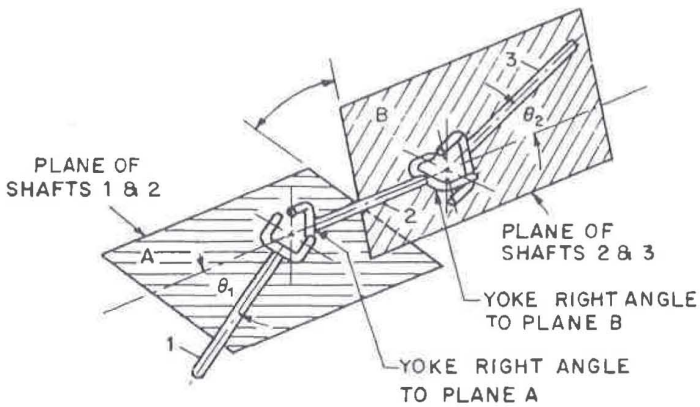

Fig. L-4 — Two-joint driveshaft with no shafts in a common plane

Fig. L-3(b) illustrates the intersecting shaft arrangement where the input and output shaft centerlines, when extended, intersect at a point which lies on a line perpendicular to the connecting shaft centerline and is located midway between the joint centers. In this arrangement, hence, joint angles θ_1 and θ_2 are also equal. Therefore, when the two yokes on the connecting shaft are placed in the same plane as shown (parallel or zero degree phasing) uniform angular velocity is transmitted for the same reason, described for the parallel shafts arrangement of Fig. L-3(a).

Fig. L-4 shows a two-joint driveshaft arrangement where none of the shafts, that is, the input and output shafts and the connecting shaft, lie in the same plane. The joint angles of both joints, however, are equal. The angle of the first joint, θ_1 lies in plane A formed by shafts 1 and 2, which are the input shaft and connecting shaft, respectively. The angle of the second joint θ_2 lies in plane B formed by shafts 2 and 3, which are the connecting shaft and output shaft, respectively. As illustrated in Fig. L-4, the driven yoke of the first joint is placed perpendicular to plane A, while the driving yoke of the second joint is located perpendicular to plane B. This arrangement results in the two yokes on the connecting shaft being out of phase with each other by an angle equal to the angle between planes A and B. This phase angle produces uniform angular velocity at shaft 3, which is the output shaft.

Resonant Frequency and Damping Factor with Viscous Damping

The amount of damping present in a vibrating system can be determined by measuring the rate of decay of the oscillation. This rate of decay for viscous damping is best expressed mathematically by a term called the logarithmic decrement, which is defined as the natural logarithm of the ratio of any two successive amplitudes. Both the resonant frequency and the damping factor or ratio can be estimated readily by applying a mechanical impulse load to the system. The resulting time history of the load position as shown in Fig. L-5 gives the period of damped oscillation and the diminishing amplitudes. Using the peak amplitude

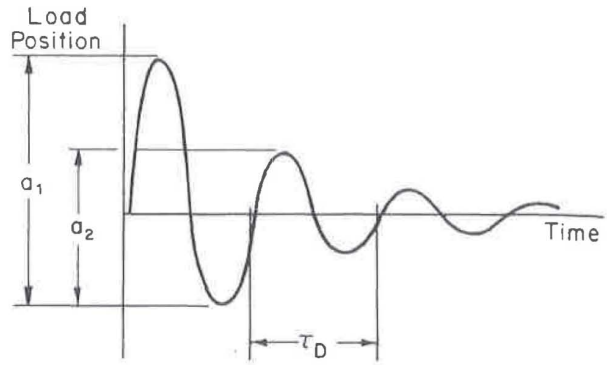

Fig. L-5 — Oscillation of vibrating system with viscous damping

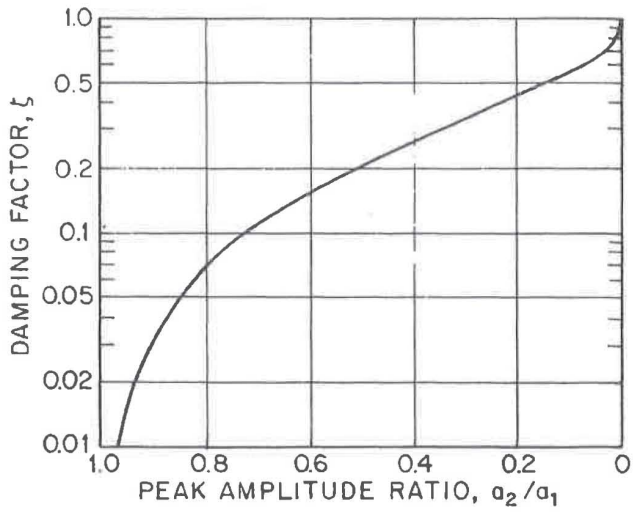

Fig. L-6 — Damping factor versus peak amplitude ratio

ratio then permits a simple approximation of the damping factor as illustrated in Fig. L-6.

Determination of Yield Stress by Offset and JAEL Methods

The yield stress of engineering materials is commonly expressed in textbook and handbook references as a stress value at which the permanent deformation corresponds to some convenient percent offset on the strain scale. This permanent deformation point is located by constructing a line originating from the strain scale, which is offset from and parallel to the elastic portion of the stress-strain curve.

As an illustrative example, assume that it is desired to determine the torsional yield torque of a 2.75 in outside diameter driveshaft quality welded steel tubing which is welded to weld yokes at both ends and results in a 55.00 in joint center-to-joint center distance. The effect of the weld yokes on the torsional deflection is considered to be the same as if the tubing were equal to the full joint center-to-joint center distance. A static torsional load is applied until ultimate failure of the tubing occurs. Also, it is desired that the yield torque be determined from the

American Axle v. Neapco - IPR2025-00091
PET_AAM_1012-0420

plotted data by both the 0.1% offset and the JAEL (Johnson's Apparent Elastic Limit) methods for comparison purposes.

The torsional shearing strain can be expressed as follows:

$$\gamma = \frac{\Delta_c}{L}$$

where:

γ = Torsional shearing strain, dimensionless

Δ_c = Displacement on circumference of tube, in

L = Joint center-to-joint center distance, in

The strain can be expressed from the 0.1% offset as follows:

$$\gamma = 100 \times 0.1 = 0.001$$

Therefore, by transposing the previous equation and substituting values, the displacement on the circumference is:

$$\Delta_c = \gamma L = 0.001 \times 55.00 = 0.05500 \text{ in}$$

The displacement on the circumference can be converted to radians and then to degrees of twist as follows:

$$\theta = \frac{2\Delta_c}{d_o}$$

where:

θ = Angle of twist, rad

d_o = Outside diameter of tube, in

hence:

$$\theta = \frac{2 \times 0.05500}{2.75} = 0.04000 \text{ rad}$$

Since 1 rad equals 57.296 deg, the angle of permanent twist in degrees is:

$$\theta = 0.04000 \times 57.296 = 2.29184 \text{ deg}$$

The previously described tube was torqued to failure by plotting torque in lb-in versus deflection in degrees as shown in Fig. L-7. At a point corresponding to 2.29 deg permanent twist on the angular deflection scale, a line is drawn parallel to the elastic portion of the load-deflection or stress-strain curve as shown. The intersection of this line with the load-deflection curve determines the 0.1% offset yield torque.

The yield torque is also to be determined by the JAEL method. The JAEL is defined as that stress at which the rate of deformation is 50% greater than the initial rate of deformation. This method is often used in laboratory testing procedures, because it is simple and provides a rapid means of determining the yield point.

In Fig. L-7, the angle of the elastic portion of the curve with respect to the vertical axis is measured. The tangent corresponding to this angle is determined and multiplied by

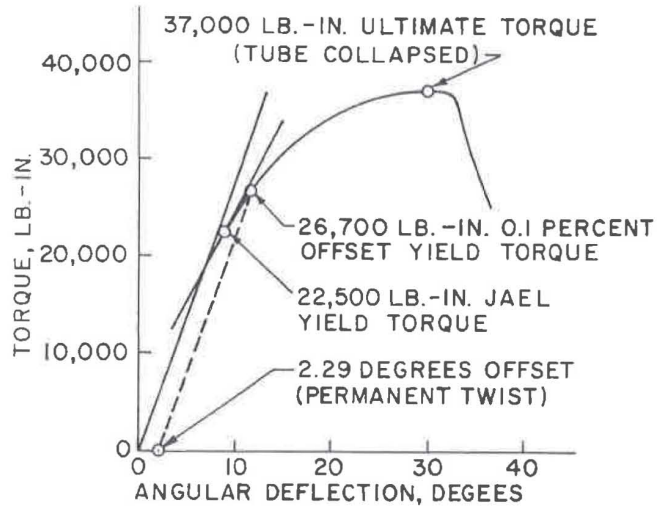

Fig. L-7 — Driveshaft tube static torsional load capacity test

1.5. This new tangent value is then converted back to degrees. Then with respect to the vertical axis, a line at this new angle is drawn tangent to the load-deflection curve. The point of tangency represents the JAEL yield torque. It can be seen that this point is lower than the yield torque found by the offset method. By using the yield torque values found in Fig. L-7 and knowing the wall thickness of the tubing, it is possible to compute the yield stresses corresponding to both yield points. For a round tube, the torsional shear yield stress has a maximum value at the outermost fiber and is:

$$S_s = \frac{T}{Z_p} = \frac{16\ T\ d_o}{\pi(d_o^4 - d_i^4)}$$

where:

T = Torque, lb-in
Z_p = Polar section modulus, in^3
d_o = Outside diameter, in
d_i = Inside diameter, in

Vehicle Performance and Analysis Equations

Engine Torque

The net output of an engine can be expressed in either torque or horsepower. In typical automotive computations, it is customary to use the torque value since it simplifies computations. The relationship between torque and horsepower is given by the following equation:

$$T_e = \frac{5252hp}{N_e}$$

American Axle v. Neapco - IPR2025-00091
PET_AAM_1012-0421

where:

5252 = A constant
T_e = Torque, lb-ft
hp = Horsepower
N_e = Engine speed, rpm

The torque can also be expressed in lb-in by using the following equation:

$$T_e = \frac{63\ 024hp}{N_e}$$

where:

63 024 = A constant

Driveshaft Torque

The engine delivered torque available in the driveshaft of an automatic transmission equipped vehicle is obtained by multiplying 12 by the engine torque, the torque converter ratio, the applicable gear reduction through the transmission, and the transmission efficiency as follows:

$$T_d = 12T_e\ R_c\ R_{at}\ \eta_{at}$$

where:

12 = A constant = 12 lb-in/1lb-ft
T_d = Driveshaft torque, lb-in
T_e = Engine torque, lb-ft
R_c = Torque converter ratio
R_{at} = Automatic transmission ratio for the particular gears engaged
η_{at} = Automatic transmission efficiency factor

For a manual transmission equipped vehicle, the torque available in the driveshaft is obtained by multiplying 12 by the engine torque, the applicable gear reduction through the transmission, and the transmission efficiency as follows:

$$T_d = 12\ T_e\ R_{mt}\ \eta_{mt}$$

where:

R_{mt} = Manual transmission ratio for the particular gears engaged
η_{mt} = Manual transmission efficiency factor

Rear Axle Torque

The torque available at the rear driving axle of a vehicle is the engine torque multiplied by the overall gear reduction of the drivetrain and the appropriate efficiencies as follows:

$$T_{ra} = T_e\ R_{mt}\ R_{axt}\ R_{ra}\ \eta_{mt}\ \eta_{axt}\ \eta_{ra}$$

where:

T_{ra} = Rear axle torque, lb-ft
R_{axt} = Auxiliary transmission ratio for the particular gears engaged
R_{ra} = Rear axle ratio
η_{axt} = Auxiliary transmission efficiency factor
η_{ra} = Rear axle efficiency factor

Front Half Axle Driveshaft Torque

For an automatic transmission equipped front wheel drive vehicle, the torque available in the half axle driveshafts is obtained by multiplying 12 by the engine torque, the torque converter ratio, the applicable gear reduction through the transmission, the final drive ratio, and the appropriate efficiencies all divided by 2 as follows:

$$T_{ad} = \frac{12\ T_e\ R_c\ R_{at}\ R_{fd}\ \eta_{at}\ \eta_{fd}}{2}$$

where:

T_{ad} = Half axle driveshaft torque, lb-in
R_{fd} = Final drive ratio
η_{fd} = Final drive efficiency factor

Engine Torque Required to Slip Rear Wheels

The engine torque required to slip the wheels is the vehicle weight over the driving wheels, times the coefficient of friction of the tires on the rolling surface, times the rolling radius of the tires, all divided by the overall gear reduction times the appropriate efficiencies as follows:

$$T_s = \frac{W\mu\ r_r}{R_{ra}\ R_{mt}\ \eta_{ra}\ \eta_{mt}}$$

where:

T_s = Wheel slip torque, lb-in
W = Vehicle weight over driving wheels, lb
μ = Coefficient of friction of tires on road surface
r_r = Rolling radius of loaded driving tire, in

Driveshaft Speed

The driveshaft speed is obtained by multiplying 168 by the gear ratio of each applicable component in the drivetrain, by the vehicle speed, and dividing by the rolling radius of the tire as follows:

$$N_d = \frac{168\ R_{ra}\ V}{r_r}$$

where:

N_d = Driveshaft speed, rpm
168 = A constant
V = Vehicle speed, mph

American Axle v. Neapco - IPR2025-00091
PET_AAM_1012-0422

Vehicle Speed

The vehicle speed is the engine rotational speed multiplied by the loaded tire rolling radius, and divided by the product of 168 and the overall gear reduction of the drivetrain as follows:

$$V = \frac{N_e r_r}{168\ R_o}$$

where:

V = Vehicle speed, mph
N_e = Engine speed, rpm
R_o = Overall gear reduction including the axle and all other applicable drivetrain components

The vehicle speed can also be expressed in ft/s by multiplying the speed in mph by 1.47 as follows:

$$v = 1.47V$$

where:

1.47 = A constant

Tractive Effort

The tractive effort force at the driving wheels is obtained by multiplying 12 by the engine torque, the overall ratio of the drivetrain, the appropriate efficiencies, all divided by the rolling radius of the driving tires as follows:

$$F_{te} = \frac{12\ T_e\ R_o\ \eta_o}{r_r}$$

where:

F_{te} = Tractive effort force, lb
η_o = Drivetrain efficiency factor

APPENDIX M

Conversion From U.S. Customary To SI (Revised Metric) Units

E. R. Wagner, P.E. — Saginaw Steering Gear Div., GMC

All units of measurement used in this design manual are based on the U.S. customary system. This appendix describes the new SI (revised metric) units and lists the factors necessary to convert the U.S. customary units to the equivalent SI units. Only the base units in the SI system required to make conversions in this manual are shown. In addition, supplementary and recognized derived units of SI required to make conversions in this manual are described. Any combination of the base and supplementary units is a derived unit. A derived unit can also be a combination of other derived units and may have a special name which is often that of the scientist first noted for developments in the utilization area for the unit. Typical examples are the newton, a unit of force, and the pascal, a unit of pressure.

Prefixes are applied to a base, supplementary or derived unit to modify that unit. The most commonly used prefixes for developing decimal variations of SI units are shown in Table M-1. A list of basic, supplementary and derived SI units is illustrated in Table M-2, while a list of conversion factors for these units is shown in Table M-3.

Table M-1 — Prefixes for SI Units

Exponential Factor	Multiplier	Prefix	Symbol
10^{12}	1,000,000,000,000	tera	T
10^{9}	1,000,000,000	giga	G
10^{6}	1,000,000	mega	M
10^{3}	1,000	kilo	k
10^{2}	100	hecto	h
10^{1}	10	deka	da
10^{0}	1	—	—
10^{-1}	0.1	deci	d
10^{-2}	0.01	centi	c
10^{-3}	0.001	milli	m
10^{-6}	0.000,001	micro	μ
10^{-9}	0.000,000,001	nano	n
10^{-12}	0.000,000,000,001	pico	p
10^{-15}	0.000,000,000,000,001	femto	f

Table M-2 — List of Basic, Supplementary and Derived SI Units

Quantity	Unit	Symbol	Other Units
length	metre	m	
mass, weight	kilogram	kg	gram (g) small masses
time	second	s	minute (min) hour (h)
temperature (other than thermodynamic)	degree Celcius	°C	
plane angle	radian	rad	degree (decimal divisions preferred)
area	square metre	m^2	
volume	cubic metre	m^3	liter (L) equals 1000 cubic centimeters and used without a prefix in expressing engine displacement
angular velocity	radian per second	rad/s	
linear velocity	metre per second	m/s	kilometre per hour (km/h) for vehicle speed
rotational velocity, speed or frequency	revolution per second	rps	revolution per minute (rpm)
frequency	hertz	Hz	formerly cycle per second (cps)
density	kilogram per cubic metre	kg/m^3	
linear damping coefficient	newton-second per metre	N • s/m	
torsional damping coefficient	newton-metre-second per radian	N • m • s/rad	
linear acceleration	metre per second squared	m/s^2	acceleration due to gravity
angular acceleration	radian per second squared	rad/s^2	
mass polar moment of inertia	kilogram-metre squared	$kg \cdot m^2$	
force, applied load	newton	N	
torque, moment of force	newton-metre	N • m	
stress	pascal	Pa	
energy, work	joule	J	
power	watt	W	
modulus of elasticity, Young's modulus	megapascal	MPa	
modulus of rigidity, shear modulus	megapascal	MPa	
unbalance, moment of mass	kilogram-millimetre	kg • mm	
linear spring rate	kilonewton per metre	kN/m	
torsional spring rate	newton-metre per degree	N • m/deg	N • m/rad
surface finish (roughness height)	micrometre	μm	

American Axle v. Neapco - IPR2025-00091
PET_AAM_1012-0425

Table M-3 — Commonly Used Conversion Factors

Multiply	By	To get equivalent number of
	Length	
Inch	25.4000*	millimetre (mm)
Foot	0.304800*	metre (m)
Mile	1.60934	kilometre (km)
	Area	
Inch^2	645.160*	millimetre^2 (mm^2)
	Volume	
Inch^3	16387.1	millimetre^3 (mm^3)
	Mass (Weight)	
Ounce	28.3495	gram (g)
Pound	0.453592	kilogram (kg)
	Force	
Pound	4.44822	newton (N)
	Acceleration	
Foot/second^2	0.304800*	metre/sec^2 (m/s^2)
Inch/second^2	0.0254000*	metre/sec^2 (m/s^2)
	Torque	
Pound-inch	0.112985	newton-metre (N • m)
Pound-foot	1.35582	newton-metre (N • m)
	Power	
Horsepower	0.745700	kilowatt (kW)
	Stress	
Pound/square inch	6.89476	kilopascal (kPa)
	Energy or Work	
Foot-pound	1.35582	joule (J)
	Velocity	
Foot/second	0.304800*	metre/sec (m/s)
Mile/hour	1.60934	kilometre/hr (km/hr)
	Temperature	
Degree Fahrenheit	$\frac{(°F-32)}{1.8}$*	degree Celcius (C)
	Surface Finish (Roughness Height)	
Microinch	0.0254000*	micrometer (m)
	Engine Displacement	
Inch^3	0.0163871	liter (L)
	Unbalance	
Ounce-inch	0.720079	kilogram-millimetre (kg • mm)
	Modulus of Elasticity (Young's Modulus)	
Pound/square inch	0.00689476	megapascal (MPa)
	Modulus of Rigidity (Shear Modulus)	
Pound/square inch	0.00689476	megapascal (MPa)
	Density	
Pound/cubic inch	27679.9	kilogram/cubic metre (kg/m^3)
	Linear Damping Coefficient	
Pound-second/inch	175.127	newton-second/metre (N • s/m)
	Torsional Damping Coefficient	
Pound-inch-second/radian	0.112985	newton-metre-second/radian (N • m • s/rad)
	Linear Spring Rate	
Pound/inch	0.175127	kilonewton/metre (kN/m)
	Torsional Spring Rate	
Pound-inch/degree	0.112985	newton-metre/degree (N • m/deg)
Pound-inch/radian	6.47357	newton-metre/radian (N • m/rad)
Pound-foot/degree	1.35582	newton-metre/degree (N • m/deg)
	Mass Polar Moment Of Inertia	
Pound-Inch-second^2	0.112985	kilogram-metre squared (kg • m^2)

*Denotes exact value

American Axle v. Neapco - IPR2025-00091
PET_AAM_1012-0426

In Tables M-2 and M-3, it should be noted that the derived SI unit for the mass polar moment of inertia, $kg \cdot m^2$ is expressed in terms of two of the basic units of measurement in the SI system as follows:

$$\text{mass or weight} \cdot (\text{length})^2$$

However, the U. S. customary derived unit for mass polar moment of inertia is generally stated as $lb\text{-}in\text{-}s^2$ or $lb\text{-}ft\text{-}s^2$, which is expressed in terms of three of the basic units of measurement in the U.S. system as follows:

$$\text{mass or weight} \cdot \text{length} \cdot (\text{time})^2$$

This derived unit can also be reduced to the same two basic units of measurement used in the derived SI unit simply by multiplying the U.S. customary derived unit by the appropriate value of the gravitational acceleration.

In Table M-3, the conversion factors are shown to six significant digits. These factors are either exact or rounded from a greater number of digits. Those conversion factors which are exact relationships are followed by an asterisk (*). When the acceleration due to gravity was required to develop certain conversion factors, a gravitational acceleration of 9.80665 m/s^2 was used.

References

1. H. M. Nelson, "A Metric America," *Automotive Industries,* November 15, 1972, pp. 43-46.

2. U. Gat, "Going Metric — The System," *Machine Design,* March 8, 1973, pp. M35-M37.

3. "Rules for SAE Use of SI (Metric) Units — SAE J916b," *1978 SAE Handbook.*

American Axle v. Neapco - IPR2025-00091
PET_AAM_1012-0427

APPENDIX N

Torque Required to Accelerate Power Train Systems

E. R. Wagner, P.E. — Saginaw Steering Gear Div., GMC

Rotary Motion Systems

In the power train of a typical machine, the gears and other rotating components revolve at different speeds than the driving motor. In order to compute the torque required by the motor to start and accelerate such a system, the inertia, load, frictional and breakaway torques must all be considered.

The inertia torque is determined by reducing the mass polar moment of inertia of each moving component to an equivalent moment of inertia about a common shaft. Then, the equivalent moment of inertias of the respective components are added together about this common shaft which is usually the motor shaft.

The basic equation for the mass polar moment of inertia of a body is:

$$J = \frac{Wk^2}{g}$$

where:

J = Mass polar moment of inertia, lb-in-s^2

W = Weight of component, lb

k = radius of gyration, in

g = acceleration due to gravity, 386.4 in/s^2

In performing an analysis of a system, it is convenient to express the inertias in terms of Wk^2, which is the product of the two variables, W and k^2, in the basic equation. The equivalent Wk_e^2 of a rotating component, referred to the motor shaft, can be obtained by means of an equation developed from the basic kinetic energy equation which is:

$$K.E. = \frac{1}{2}\,\frac{WV^2}{g}$$

where:

K.E. = Kinetic energy, in-lb

V = Linear velocity, in/s

The equation for the linear velocity of a rotating component is:

$$V = \frac{2\pi kN}{60}$$

where:

N = Rotational speed, rpm

60 = A constant, 60 s/min

By substituting this linear velocity equation and the gravitational constant in the basic kinetic energy equation, the kinetic energy of a rotating component can be expressed as follows:

$$K.E. = \tfrac{1}{2}\left(\frac{W}{386.4}\right)\left(\frac{2\pi kN}{60}\right)^2$$

$$K.E. = \frac{Wk^2N^2}{70\,471}$$

Since the kinetic energy of a rotating component and its kinetic energy referred to in the motor shaft are the same, these two kinetic energy expressions can be equated as follows:

$$\frac{Wk_e^2N_m^2}{70\,471} = \frac{Wk^2N^2}{70\,471}$$

Therefore, the equivalent Wk_e^2 is:

$$Wk_e^2 = Wk^2\left(\frac{N}{N_m}\right)^2$$

where:

N_m = Rotational speed of motor shaft, rpm

In other words, the Wk_e^2 of a component rotating at a speed different from that of the motor is the same as the Wk^2 of the component times the square of the ratio of its speed to that of the motor. If desired, the values of the actual and equivalent mass moment of inertia may be used and the previously developed equation would be:

$$J_e = J\left(\frac{N}{N_m}\right)^2$$

The torque required at the motor shaft to accelerate the rotating system can be determined with the following basic equation:

$$T = J_e\alpha$$

American Axle v. Neapco - IPR2025-00091
PET_AAM_1012-0429

where:

T = Torque, lb-in

α = Angular acceleration, rad/s^2

The basic equation for the equivalent mass polar moment of inertia of the rotating system is:

$$J_e = \frac{Wk_e^2}{g} = \frac{Wk_e^2}{386.4}$$

The equation for the angular acceleration can be developed as follows:

$$\alpha = \frac{\omega}{t} = \frac{2\pi N_m}{60t}$$

where:

ω = Angular velocity, rad/s

t = Time, s

By substituting the equations for the equivalent mass moment of inertia and the angular acceleration in the basic acceleration torque equation, the inertia torque required at the motor shaft can be expressed as follows:

$$T = \left(\frac{Wk_e^2}{386.4}\right)\left(\frac{2\pi N_m}{60t}\right)$$

$$T = \frac{Wk_e^2 N_m}{3690t}$$

Linear Motion Systems

The linear speed of a concentrated weight located at a given distance from a rotational axis is:

$$V = \frac{2\pi kN}{60}$$

where:

k = radius of concentrated weight to rotational axis, in

Then, by substituting this equation for the linear speed and the gravitational constant in the basic kinetic energy equation, the kinetic energy for the rotating body is:

$$K.E. = \tfrac{1}{2}\,\frac{WV^2}{g} = \tfrac{1}{2}\left(\frac{W}{386.4}\right)\left(\frac{2\pi kN}{60}\right)^2$$

and for the linearly moving body the kinetic energy is:

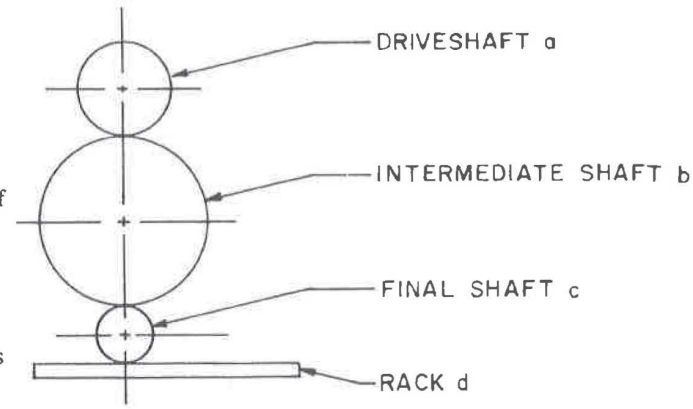

Fig. N-1 — Typical machine power train

$$K.E. = \tfrac{1}{2}\left(\frac{W}{386.4}\right)V^2$$

These two expressions can be equated as follows:

$$\tfrac{1}{2}\left(\frac{W}{386.4}\right)\left(\frac{2\pi\ kN}{60}\right)^2 = \tfrac{1}{2}\left(\frac{W}{386.4}\right)V^2$$

or: $$Wk^2(2\pi)^2N^2 = WV^2 \times 3600$$

When referred to the motor shaft, the equivalent Wk_e^2 of a component moving in a straight line is:

$$Wk_e^2\,(2\pi)^2\,N_m^2 = WV^2 \times 3600$$

or: $$Wk_e^2 = 91.19\,W\left(\frac{V}{N_m}\right)^2$$

This equation is valid only when the linear velocity maintains a constant relationship to the motor speed as in the case of a rack and pinion. Reciprocating components with variable velocity cannot be applied here.

Combination Drive Systems

The computations on all components of a machine, that either rotate or move linearly, can be reduced to the mathematical basis corresponding to the speed of the driving motor or to any other reference speed. After the summation of the Wk_e^2 of all components has been made, the torque required to accelerate the system can be computed as well as the horsepower.

Fig. N-1 illustrates schematically, the power train of a typical machine. It is necessary to determine the total torque which the motor must produce on its shaft to start and accelerate the machine and to overcome the load and friction torques. The equations for these various torques are developed by using the following nomenclature:

V = Linear velocity of rack and load, in/s.

A = Total Wk^2 of rotating components on driveshaft a.

American Axle v. Neapco - IPR2025-00091
PET_AAM_1012-0430

B = Total Wk^2 of rotating components on intermediate shaft b.

C = Total Wk^2 of rotating components on final shaft c.

D = WV^2 of linear moving rack d and load.

N_a = rpm of driveshaft a.

N_b = rpm of intermediate shaft b.

N_c = rpm of final shaft c.

Wk_e^2 = Total equivalent Wk_e^2 referred to driveshaft for the complete power train.

The total equivalent Wk_e^2 can be expressed by the following equation:

$$Wk_e^2 = A + B\left(\frac{N_b}{N_a}\right)^2 + C\left(\frac{N_c}{N_a}\right)^2 + 91.19\,\frac{D}{N_a^2}$$

The torque required at driveshaft a to accelerate this Wk_e^2 load from rest to a driveshaft speed of N_a rpm in t seconds is:

$$T_a = \frac{Wk_e^2 N_a}{3690t}$$

In a machine where the motor is coupled directly to the driveshaft, the torque required at the motor shaft to accelerate the Wk_e^2 of the load and the Wk_m^2 of the motor is:

$$T_m = \frac{(Wk_e^2 + Wk_m^2)N_a}{3690t}$$

When the motor is connected to the driveshaft by a belt, and with the motor having a speed of N_m rpm, the torque required at the motor shaft to accelerate the Wk_e^2 of the load referred to the driveshaft and the Wk_m^2 of the motor referred to its shaft is:

$$T_m = \frac{Wk_m^2 N_m + Wk_e^2\left(\frac{N_a}{N_m}\right)^2}{3690t}$$

In addition to the torque required for acceleration of system inertia, additional torque is required to overcome load torque, friction torques, and breakaway torques. Torque at the driveshaft caused by a load is:

$$T'_a = \frac{T_c N_c}{N_a}$$

or at the motor shaft the torque is:

$$T'_m = \frac{T'_a N_a}{N_m}$$

Torque that results from the friction on components such as bearings and gears, windage and breakaway torque caused by static friction of oil and lubricant in bearings, are often large enough to be considered. These torques can be expressed in terms of equivalent torque T''_m at the motor shaft by using the same procedure as with other torques. To start and accelerate a machine and to overcome load and friction torques, the motor must produce a total torque T_t on its shaft such that:

$$T_t = T_m + T'_m + T''_m$$

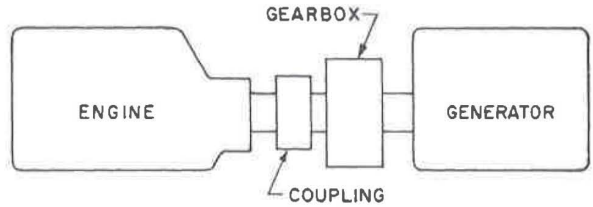

Fig. N-2 — Typical Diesel engine and generator drive system

Application Problem

A 250 hp, 8 cyl, 4 cycle Diesel engine is connected to a generator through a coupling and a gear box as shown in Fig. N-2. The engine rotating at 1800 rpm drives the generator at 3600 rpm through the gear box with a 1:2 gear ratio. The mass polar moment of inertia of the engine is 50 lb-in-s², and that of the generator is 80 lb-in-s².

Assuming that the inertia effects of the gear box are included with the inertia values for the engine and generator, determine the following:

A. The equivalent or effective inertia of the generator referred or corrected to the engine output shaft speed.

B. The effective system inertia of the engine inertia and the effective generator inertia combined.

Solution:

A. The effective inertia of the generator corrected to the engine output shaft speed is:

$$J_{g(eff)} = J_g\left(\frac{N_g}{N_e}\right)^2$$

where:

$J_{g(eff)}$ = Effective mass polar moment of inertia of generator, lb-in-s²

J_g = Mass polar moment of inertia of generator, lb-in-s²

N_g = Rotational speed of generator, rpm

N_e = Rotational speed of engine, rpm

$$J_{g(eff)} = 80\left(\frac{3600}{1800}\right)^2 = 320 \text{ lb-in-s}^2$$

B. The torsional system shown in Fig. N-2 can be considered as a two-degree-of-freedom system where two rotating in-

ertias are coupled by a torsional spring. In such a system, the effective inertia is:

$$J_{eff} = \frac{J_e J_{g(eff)}}{J_e + J_{g(eff)}}$$

where:

J_{eff} = Effective system mass polar moment of inertia, lb-in-s^2

J_e = Mass polar moment of inertia of engine, lb-in-s^2

$$J_{eff} = \frac{50 \times 320}{50 + 320} = 43.24 \text{ lb-in-s}^2$$

The need for this effective system inertia is illustrated in a typical application problem in the section on *Rubber Element Tubes* of the *Vibration Control* chapter.

APPENDIX O

Basic Cardan Universal Joint Computation Procedures

E. R. Wagner, P.E. — Saginaw Steering Gear Div., GMC

A Cardan universal joint is used to connect two shafts which intersect and are positioned in an angular relationship in the horizontal plane, as shown in Fig. 0-1. Because the Cardan joint illustrated in this figure is of the non-self-supporting type, two bearings are used to support both the driving and driven shaft members of the joint.

Since the driving and driven shafts of the joint are not coaxial or in a straight line, the rotational speed of the driven shaft is not equal to that of the driving shaft. The equation expressing the relationship of these speeds was derived in the section on the *Cardan or Hooke Universal Joint* and is:

$$N_Y = \frac{N_X \cos\theta}{1 - \sin^2\beta \sin^2\theta}$$

where:

N_Y = Rotational speed of the driven shaft yoke, rpm

N_X = Rotational speed of the driving shaft yoke, rpm

θ = Joint angle (Angle between the axes of the driving and driven shafts), deg

β = Angle of rotation of the driving shaft yoke from the position where it is perpendicular to the plane of the joint angle, deg

As an example, consider a torque of 360 lb-in applied to the driving shaft X of the joint and with the joint angle θ at 20 deg. For the rotational position illustrated in Fig. 1, and by using the appropriate dimensions as required, determine the following:

A. The torque on the driven shaft Y.

B. The bearing stress of the cross trunnion on the projected bearing area in the yoke cross holes.

C. The maximum bending stress at section A − A of the cross trunnion where the stress concentration factor due to the fillet radius is assumed to be 2.00.

D. The maximum compressive, maximum tensile, and maximum shear stresses in the yoke of driving shaft X at section B − B.

E. The bearing reactions at A, B, C, and D.

Solution:

A. The torque on the driven shaft Y can be determined in several ways. One method is to examine the cross, by application of the equations of equilibrium, and to determine that the only forces which can be applied to it are as shown in the plane of the cross. Each of the forces acting on the cross trunnions are designated F.

The two components of F, acting on the yoke of driving shaft X, are $F_b = F\cos\theta$ which is perpendicular to the rotational axis and $F_a = F\sin\theta$ which is axially in line with the rotational axis. The torque acting on the yoke of the driving shaft X due to the action of the cross is:

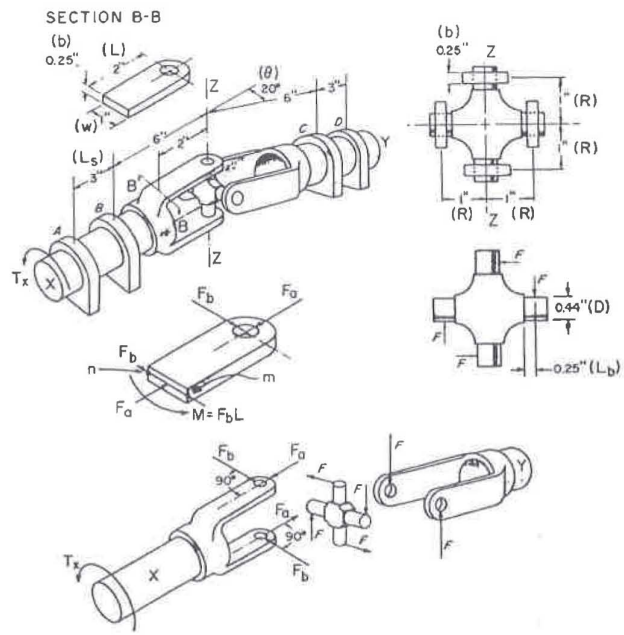

Fig. 0-1 — Cardan universal joint

$$T_x = F_b\,(2R) = F\cos\theta\,(2R)$$

where:

T_X = Torque on yoke of driving shaft X, lb-in

F = Couple force on cross trunnion, lb

R = Torque radius of couple force, in

θ = Joint angle, deg

The solution for the force can be obtained by rearranging this equation and substituting as follows:

$$F = \frac{T_X}{\cos\theta\,(2R)} = \frac{T_X}{\cos 20\text{ deg}\,(2R)}$$

$$F = \frac{360}{0.939693 \times 2 \times 1.00} = 191.55\text{ lb}$$

The values of the two components of F can now be determined as follows:

$$F_b = F\cos\theta = F\cos 20\text{ deg}$$

$$= 191.55 \times 0.939693$$

American Axle v. Neapco - IPR2025-00091
PET_AAM_1012-0433

$$F_b = 180.00 \text{ lb}$$

$$F_a = F\sin\theta = F\sin 20 \text{ deg}$$

$$= 191.55 \times 0.342020$$

$$F_a = 65.51 \text{ lb}$$

The torque on the driven shaft Y is:

$$T_Y = F\,(2R) = 191.55 \times 2 \times 1.00$$

$$T_Y = 383.10 \text{ lb-in}$$

It is noted that for the position of rotation shown, shaft Y is in torsion only, while shaft X is in bending as well as in torsion. If shaft X were rotated 90 deg, shaft X would be in torsion only, while shaft Y would be subjected to both bending and torsion.

A second method that can be used to obtain the output torque of the joint is to use the equation derived in the section on the *Cardan or Hooke Universal Joint,* which expresses the relationship of angular speeds. When no friction loss is assumed in the joint, the power in must equal the power out as follows:

$$HP = \frac{T_X N_X}{63\,024} = \frac{T_Y N_Y}{63\,024}$$

or:

$$T_X N_X = T_Y \left(\frac{N_X \cos\theta}{1 - \sin^2\beta \sin^2\theta} \right)$$

Then, by rearranging this equation, the torque on the driven shaft Y can be expressed as follows:

$$T_Y = T_X \left(\frac{1 - \sin^2\beta \sin^2\theta}{\cos\theta} \right)$$

By substituting values, the driven shaft torque can be obtained for the rotational position shown in Fig. 1 as follows:

$$T_Y = 360 \left(\frac{1 - \sin^2 0 \text{ deg} \sin^2 20 \text{ deg}}{\cos 20 \text{ deg}} \right)$$

$$= 360 \left(\frac{1 - (0.00)^2 \times (0.342020)^2}{0.939693} \right)$$

$$T_Y = 383.10 \text{ lb-in}$$

This solution agrees with the value for the torque obtained by the previous force analysis method.

B. The bearing stress of the cross trunnion on the projected bearing area in the yoke cross holes is computed as follows:

$$S_{br} = \frac{F}{A} = \frac{F}{bD}$$

where:

S_{br} = Bearing stress, psi

b = Yoke section thickness at cross hole, in

D = Cross trunnion diameter, in

hence:

$$S_{br} = \frac{191.55}{0.25 \times 0.44} = 1741.36 \text{ psi}$$

C. Assuming a stress concentration factor of 2.00 for the fillet radius, the maximum bending stress at section A − A of the cross trunnion is determined as follows:

$$S'_b = K_t S_b = K_t \frac{M}{Z} = \frac{K_t F L_b}{\frac{\pi D^3}{32}}$$

where:

S'_b = Maximum bending stress, psi

K_t = Stress concentration factor, dimensionless

S_b = Nominal bending stress, psi

M = Bending moment, in-lb

Z = Area section modulus, in^3

L_b = Bending moment arm, in

hence:

$$S'_b = \frac{2.00 \times 191.55 \times 0.25}{\frac{\pi \times (0.44)^3}{32}}$$

$$S'_b = 11\,452.34 \text{ psi}$$

D. The maximum compressive stress in the yoke of driving shaft X at point m of section B − B is:

$$S_c = \frac{M}{Z} + \frac{F_a}{A} = \frac{F_b L}{\frac{bw^2}{6}} + \frac{F_a}{bw}$$

where:

b = Yoke section thickness, in

w = Yoke section width, in

L = Bending moment arm, in

hence:

$$S_c = \frac{180 \times 2}{\frac{0.25 \times (1.00)^2}{6}} + \frac{65.51}{0.25 \times 1.00} = 8640.00 + 262.04$$

$$S_c = 8902.04 \text{ psi}$$

The maximum tensile stress in the yoke of driving shaft X at point n of section B−B is:

$$S_t = \frac{\frac{F_b L}{bw^2}}{6} - \frac{F_a}{bw} = 8640.00 - 262.04$$

$$S_t = 8377.96 \text{ psi}$$

The maximum shear stress in the yoke of driving shaft X at point m of section B−B is:

$$S_s = \tfrac{1}{2} S_c = \tfrac{1}{2} \times 8902.04$$

$$S_s = 4451.02 \text{ psi}$$

E. The reactions at bearings A, B, C, and D are caused by bending moments that are imposed on shafts X and Y when torque is transmitted through the Cardan joint which is operated at an angle as shown in Fig. 1. For the rotational position shown, shaft X is subjected to both bending and torsional loads, while shaft Y is in torsion only. Therefore, bearings A and B must resist the bending moment produced by the axial force components F_a on the yoke of driving shaft X as follows:

$$F_A = F_B = \frac{F_a (2R)}{L_s}$$

where: $F_A = F_B$ = Reaction forces on bearings A and B, respectively, lb

L_s = Bearing span, in

Substituting values, the reactions at bearings A and B are:

$$F_A = F_B = \frac{65.51 \times 2 \times 1.00}{3.00}$$

$$F_A = F_B = 43.67 \text{ lbs}$$

Since no axial force components exist on the yoke of driven shaft Y, at the rotational position shown in Fig. 1, the reactions at bearings C and D are:

$$F_C = F_D = 0$$

In the section on the *Cardan or Hooke Universal Joint*, equations were derived for the bending moments on both the driving and driven shafts for all positions of joint rotation. These bending moments are commonly referred to in Cardan joint kinematics as secondary couples. For the rotational position shown, the secondary couple on the driving shaft X is:

$$C_X = T_X \tan \theta$$

where:

C_X = Secondary couple on driving shaft, in-lb

Also, for the rotational position shown, the secondary couple on the driven shaft Y is zero. The reaction forces on bearings A and B due to the secondary couple on the driving shaft can be expressed as follows:

$$F_A = F_B = \frac{T_X \tan \theta}{L_S}$$

Substituting values, the solution for these reaction forces yields the following:

$$F_A = F_B = \frac{360 \tan 20 \text{ deg}}{3.00} = \frac{360 \times 0.363970}{3.00}$$

$$F_A = F_B = 43.67 \text{ lbs}$$

This solution agrees with the previously computed values for the force reactions at bearings A and B. Since the secondary couple on the driven shaft Y is zero, the force reactions at bearings C and D are likewise zero and also agree with the previous computation method.

The entire solution, ((A) through (E)) for this problem, can also be performed with the driving shaft X rotated 90 deg from that shown in Fig. 1. The results would indicate that the rotational position shown in Fig. 1 produces the highest torque and forces on the cross and yoke and, therefore, yields the highest stresses in these components.

American Axle v. Neapco - IPR2025-00091
PET_AAM_1012-0435

The calculations shown in this problem are intended to show the basic computation procedures only. The actual permissible levels of forces and stresses depend on the specific component materials and mechanical properties for a given Cardan joint design and on the requirements of the intended application. Further, in order to illustrate simplified computation procedures, the Cardan joint was shown in Fig. 1 with a plain bearing design instead of having bearings which incorporate needle rollers.

It should also be pointed out that with regard to analysis of the yoke ear, the location of the section under consideration relative to the centroid of the projected bearing area in a given joint is extremely important. Sections taken at various points along the ear of a yoke are subjected to varying magnitudes of forces and moments (bending as well as torsion). For example, at section B−B of the problem analyzed, the yoke ear was subjected to an axial force and a bending moment only. No torsional moment was present. If a torsional moment had been present, the resultant or combined stresses in section B−B would have been higher.

References

1. A. S. Hall, Jr., A. R. Holowenko, and H. G. Laughlin, *Schaum's Outline of Theory and Problems of Machine Design*, New York: Schaum Publishing Company, 1961.

American Axle v. Neapco - IPR2025-00091
PET_AAM_1012-0436

Bibliography

American Axle v. Neapco - IPR2025-00091
PET_AAM_1012-0437

Bibliography

E. R. Wagner, P.E. — Saginaw Steering Gear Div., GMC

SAE Literature

1. F. M. Potgieter, *Recent European Developments on Constant Velocity Joints*, Paper 650682, 1965.
2. C. E. Cooney, *Design and Application of Universal Joints for Off-Highway Vehicles*, Paper 650681, 1965.
3. C. E. Cooney, *Practical Procedures for Designing and Analyzing a Tandem Truck Driveline*, Paper 660413, 1966.
4. J. A. Kayser, *Drivelines for Heavy Equipment*, Paper 403A, 1961.
5. B. R. Reimer, *Design and Application Considerations for Agricultural P.T.O. Drivelines*, Paper 650680, 1965.
6. L. J. DiFrancesco, *Better Needle Bearings for Universal Joints*, Paper 660159, 1966.
7. R. R. Burkhalter and P. J. Mazziotti, *The Low Silhouette Drive Line*, Paper 691, 1956.
8. J. A. Kayser, *New Concepts in Drivelines*, Paper 320E, 1961.
9. F. R. L. Daley, P. E. and R. J. Christensen, *The New Buick Low-Profile Driveline*, Paper 320B, 1961.
10. F. F. Timpner, *The 1961 Tempest Driveline*, Paper 320A, 1961.
11. D. R. Veazy, *Engineering the Continental Driveline*, Paper 320D, 1961.
12. P. J. Mazziotti, *Torsionally Resilient Drive Lines*, Paper S180, 1959.
13. W. T. Trisler, *Drivelines Providing Torsional Flexibility*, Paper 737E, 1963.
14. P. G. Jones, *Torsional Vibrations in Drive Lines*, Paper S428, 1965.
15. P. Mitchell, *Reducing Shock and Vibration in Power Take-Off Drivelines*, Paper 737D, 1963.
16. M. C. Kaye, *Some Aspects of the Truck Drive Train Vibration Problem*, Paper 402A, 1961.
17. H. R. Pickford, "Hints on How to Reduce Truck Drive Train Vibration," (Written discussion on Paper 402A), *SAE Journal*, April, 1962, pp. 70-73.
18. S. E. Staffeld, *Computer Analysis of Automotive Drivetrains*, Paper 127C, 1960.
19. J. R. Farnham, *Power Train Tuning for Quiet Cars*, Paper 627C, 1963.
20. J. K. Sauter, *Driveline Critical Speed–A Practical Approach*, Paper 680146, 1968.
21. J. A. Kayser and W. T. Groves, *A New Concept in Driveline Slip Splines*, Paper 680118, 1968.
22. J. R. Young, *Truck Driveline Slip*, Paper 660145, 1966.
23. W. B. McCardell, J. Mahoney, and D. Cameron, *Design Practice Automotive Driveline Splines and Serrations*, Paper 680009, 1968.
24. P. E. Burke and W. Fisher, *Design and Analysis Procedures for Shafts and Splines*, Paper 680024, 1968.
25. P. E. Burke, *Shaft Design for Finite Life*, Paper 359D, 1961.
26. L. D. Hurley, *A Rolling End Motion Universal Joint for Passenger Car Drive Shafts*, Paper 958C, 1965.
27. S. Oldberg and R. Stuemky, *The Evolution of a Constant Velocity Universal Joint*, Paper 958B, 1965.
28. F. F. Miller, *Constant Velocity Universal Ball Joints–Their Application in Wheel Drives*, Paper 958A, 1965.
29. P. J. Mazziotti, *Dynamic Characteristics of Truck Driveline Systems*, Paper SP-262, 1964.
30. D. P. Marquis, *Future High Angle Joints*, Paper S218, 1959.
31. D. P. Marquis, *Low Tunnels Mean High Angles*, Paper 320C, 1961.
32. W. T. Condon, *Application of Universal Joints to Construction and Industrial Machinery*, Paper 403B, 1961.
33. R. H. Bollinger, *Dynamics of a Low Silhouette Hotchkiss Drive Line*, Paper 119, 1957.
34. L. E. Muller and E. Greene, *Dynamics of a Low Silhouette Torque Tube Drive Line*, Paper 120, 1957.
35. P. G. Axelrad, *New Features for Four Wheel Drive Vehicles*, Paper 660125, 1966.
36. O. E. Phelps, *Front Wheel Drive Components to Achieve Low Silhouette*, Paper 945C, 1965.
37. W. P. Mitchell and W. E. Day, *Driveline and Axle Noise*, Paper 725, 1956.
38. M. A. Erickson, *Strength Considerations in Agricultural Drive Lines*, Paper 95U, 1959.
39. R. H. Bollinger and J. H. Ruhl, *Cures for Powerplant Bending Noise Problems*, Paper 203A, 1960.
40. J. R. Farnham, *Control of Noise and Vibration in the Unibody*, Paper 143C, 1960.
41. "Drive Shaft Nomenclature and Terminology," SAE Report J-901–Drive Shaft Subcommittee, *SAE Handbook*, 1965.
42. "Universal Joint and Drive Shaft Nomenclature and Terminology," SAE Report J-901a—Drive Shaft Subcommittee, *SAE Handbook*, 1969.
43. J. R. Gilmore and G. R. Beardsley, *Driveline–Optimum Design*, Paper SP-240, 1962, pp. 6-11.
44. D. P. Marquis, *The Composite Universal Joint*, Paper 690256, 1969.
45. J. M. Roethlisberger and F. C. Aldrich, *The Tri-Pot Universal Joint*, Paper 690257, 1969.
46. A. H. Berker and B. J. Hoover, *Driveline Tuning for Quieter Vehicles*, Paper 690258, 1969.
47. W. M. Esser, *Axle Noise Control–The IVA Propeller Shaft*, Paper 690259, 1969.
48. D. Hajduk, *A Technique for Reduction of Axle Generated Noises*, Paper 700102, 1970.

American Axle v. Neapco - IPR2025-00091
PET_AAM_1012-0439

49. C. W. Haines, *Drivelines for High Performance*, Paper 700742, 1970.

50. M. M. Schall, *A High Speed Drivetrain Concept for Gas Turbine Powered Trucks*, Paper 710200, 1971.

51. F. M. Potgieter, "Germans Develop Unique Universal Joints," *SAE Journal*, September, 1958, pp. 42-47.

52. E. R. Wagner, P. E., *Driveline Splines and Axial Motion Mechanisms*, Paper 740670, 1974.

53. C. E. Cooney, *Double Cardan Constant Velocity Universal Joint*, Paper 740671, 1974.

54. "Universal Joint and Driveshaft Nomenclature and Terminology," SAE Report J-901b–Driveshaft Subcommittee, *SAE Handbook*, 1974.

55. D. Hodgetts and D. W. Parkins, *Vibration Modes of an Automobile Driveline*, Paper 740952, 1974.

56. W. P. Mitchell, *Drive Line for High Speed Truck Engines*, Paper 201, 1954.

57. E. Abe and H. Hagiwara, *Advanced Method for Reduction in Axle Gear Noise*, Paper 750150, 1975.

58. C. W. Spicer, "Action, Application and Construction of Universal Joints," *The Journal of the Society of Automotive Engineers*, Vol. XIX, No. 6, December, 1926, pp. 625-634.

59. "Rubber Springs Between Universal Joint Centers up Torsional Flexibility," *SAE Journal*, June, 1959, pp. 42-43.

60. "A Primer on Driveline Splines and Axial Motion Mechanisms," *Automotive Engineering*, Vol. 82, No. 9, September, 1974, pp. 44-49, 114.

61. R. G. Joyner, *The Truck Driveline as a Source of Vibration*, Paper 760843, 1976.

62. R. L. Fox, *Measurement and Analysis of Truck Power Train Vibration*, Paper 760844, 1976.

63. S. O. Williamson, *Vehicle Drive-Line Dynamics*, Paper 680584, 1968.

64. T. S. Trojanowski, P.E., *Torsionally Elastic Agricultural PTO Drivelines and their Application*, Paper 690064, 1969.

65. S. L. Girguis, I. G. Sankey, V. Schueler, and P. Guimbretiere, *Analysis of Constant Velocity Joints and Their Applications*, Paper 780098, 1978.

66. E. P. Lehmann, *Shaker-Vibration Study of Automotive Driveline*, Paper 680050, 1968.

67. E. P. Remmers, *The Dynamics of Automotive Rear Axle Gear Noise*, Paper 710114, 1971.

68. "How to Limit Truck Drive Train Vibrations," *SAE Journal*, November, 1961, pp. 58-60.

Non-SAE Literature

1. W. Steeds, "Universal Joints," *Automobile Engineer*, January, 1937, pp. 10-12.

2. A. H. Rzeppa, "Universal Joint Drives," *Machine Design*, April, 1953, pp. 2-10.

3. "Universal Joints-The Mechanical Drives Reference Issue," *Machine Design*, Chapt. 11, December, 1969, pp. 66-69.

4. A. Treyer, "Le Joint Tracta," *Ingenieurs De L'Automobile*, April, 1964, pp. 221-225.

5. R. E. Philipp, "Kinematics of a General Arrangement of Two Hooke's Joints," *ASME Publication 60-WA-37*.

6. W. Steeds, "The Hooke's Joint," *Automobile Engineer*, April, 1957, pp. 161-163.

7. H. I. F. Evernden, "The Propeller Shaft or Hooke's Coupling and the Cardan Joint," *Proceedings of the Institution of Mechanical Engineers*, October, 1949, pp. 100-110.

8. H. H. Mabie, "Constant Velocity Joints," *Machine Design*, May, 1948, pp. 101-105.

9. E. B. Sturges, "Constant Velocity Universal Joints," *Product Engineering*, July, 1947, pp. 120-123.

10. R. B. Bossler and W. G. Flannelly, "How to Predict Drive-Train Vibration Caused By Hooke's Joints," *Machine Design*, June 18, 1964, pp. 194-198.

11. D. A. Lee, "Estimating Universal Joint Performance Variation," *Machine Design*, July 8, 1965.

12. N. J. Denil, "The Application of Nomography to the Design of a Two-Piece Propeller Shaft System," *GM Engineering Journal*, Vol. 7, No. 4, 1960, pp. 2-10.

13. J. Z. DeLorean, "The Pontiac Tempest Drive Line," *Automotive Industries*, July, 1961, pp. 39-42.

14. *Universal Joint Layout and Selection Data Book*, Rockwell-Standard Corporation, 1964.

15. "Propeller Shafts," *Automobile Engineer Supplement*, October, 1968.

16. P. Cormack, "Harmonic Analysis of Motion Transmitted by Hooke's Joint," *Philosophical Magazine*, Vol. 44, 1922, pp. 156-160.

17. R. F. Ansdale, "Transmission Shafts and Final Drive Assemblies," *Automobile Engineer*, May, 1964, pp. 230-232.

18. "Triumph Propeller Shafts," *Automobile Engineer*, August, 1965, pp. 365-366.

19. P. J. Mazziotti, *Universal Joints and Propeller Shafts*. Bulletin J-1371, Dana Corporation, October 15, 1954.

20. N. P. Chironis, "Dressing Splines in Nylon Proves to Extend Their Life," *Product Engineering*, April 8, 1968, pp. 42-44.

21. H. O. Fuchs, *Notes on Universal Joints*, Product Study, GMC, October 6, 1939.

22. W. Reinecke, "Bewegungsverhaeltnisse bei Kardangelenken," *ATZ*, Vol. 33, No. 22, August 10, 1930, pp. 530-534.

23. D. Thomas, "Das Kraeftespiel im Kreuzgelenk," *Schweizerische Bauzeitung*, Vol. 75, No. 17, April 24, 1920, pp. 187-188.

24. F. E. Mynard, "Theorie Generale des joints de transmission de rotation," *Le Genie Civil*, Vol. 102, No. 15, April 15, 1933, pp. 345-349. Also in: *Journal de la SIA*, Vol. 11, March, 1938, pp. 77-88.

25. K. Kutzbach, "Gleichganggelenke für Wellenleitungen," *VDI-Z*, Vol. 81, No. 30, July 24, 1937, pp. 889-892.

26. T. C. Stott, *Notes on Propeller Shafts and Universal Joints*, February 13, 1962.

27. M. Olley and J. Valukonis, *Propeller Shaft and Universal Joint Notes*, Chevrolet R & D, GMC, 1954.

28. L. Forbush, *Method for Minimizing Couple Forces at Center Bearing Support of Three-Joint Propeller Shaft*, Engineering Staff, GMC, 1955.

29. P.M. Heldt, "Propeller Shafts and Universal Joints," Chapt. VI, *The Automotive Chassis*, 1948, pp. 140-169.

30. "Propeller Shafts, Slip Joints and Universal Joints,"

American Axle v. Neapco - IPR2025-00091
PET_AAM_1012-0440

Principles of Automotive Vehicles, TM9-2700, Chapt. 16, Department of the Army, November, 1947, pp. 292-301.

31. "Universal Joints and Propeller Shafts," *Automobile Engineers Reference Book,* Section 13, 1959, pp. 46-62.

32. "Isolation of the Engine and Transmission System," *Automobile Engineer,* October, 1969, pp. 402-403.

33. S. J. Baranyi, "The Analytical Design of Universal Joints," *Design News,* September 1, 1969

34. "Velocity and Acceleration Analysis of Universal Joints," *Machine Design,* Vol. 14, 1942, pp. 93-94.

35. R. Dean-Averns, "Propeller Shafts," *Automobile Engineer,* July, 1930, pp. 249-252.

36. Adiel Y. Dodge, "Bearing Loads Due to Universal Joint Action," *Automotive Industries,* December 15, 1940, pp. 636-639.

37. L. D. Hagenbook and J. H. Holstein, "Universal Joints," *Product Engineering,* June, 1942, pp. 334-336.

38. H. K. Sachs, "On Critical Shaft Speeds in Flexure of Spring Supported Automotive Drive Lines," *Industrial Mathematics,* Vol. 10, Part II, 1959-1960, pp. 45-49.

39. B. C. Carter, "Analytical Treatment of Linked Levers and Allied Mechanisms," *J. Royal Aeronautical Society,* October, 1950, pp. 247-252.

40. M. Orain, "Demonstration de l'homocinetie du joint G. I." (Notes on tripode joint calculations), *Ingenieurs De L'Automobile,* Vol. 37. April, 1964, pp. 225-227.

41. R. F. Ansdale, "Propeller Shafts and Final Drives," *Automobile Engineer,* May, 1963, pp. 233-235.

42. R. H. Burkhalter and P. J. Mazziotti, "Motion Equations of a Cardan-Type Universal Joint," *Design News,* April 15, 1956.

43. *Balance Engineering Manual.* Research Lab, GMC, 1962.

44. "Propeller Shaft Tubing," *Handbook of Welded Steel Tubing,* Welded Steel Tube Institute, Inc., 1967, pp. 37-43.

45. R. T. Buscarello, *Practical Solutions of Machinery and Maintenance Vibration Problems,* Update Industrial Seminars, 1968.

46. "Isolation of the Engine and Transmission System," *Automobile Engineer,* October, 1969, pp. 402-403.

47. J. A. Kayser, "Cardan-Type Universal Joints," *Power Transmission and Bearing Handbo*', 1969-1970, pp. A278-A281.

48. N. J. Denil, *Analysis of Multi-Universal Joint Drive Lines,* Vols. I and II, Cadillac Motor Car Division and General Motors Institute, 1957.

49. *The Birfield Joint, An Angular Contact Constant Velocity Universal Joint,* Hardy Spicer Limited, 1967.

50. J. W. Macielinski, "The Design and Selection of Universal Joints, Part I: The Hooke's Joint," *The Journal of Automotive Engineering,* May, 1970, pp. 14-18.

51. J. W. Macielinski, "The Design and Selection of Universal Joints, Part II: The Constant Velocity Joint," *The Journal of Automotive Engineering,* June, 1970, pp. 8-14.

52. *Drive Line Engineering,* Vols. I and II, The Institution of Mechanical Engineering, London, 1972.

53. F. A. Hiersch, "Harmonic Analysis of a Hooke's Joint Motion," *Journal of Applied Mechanics,* June, 1943, Page A-76.

54. J. R. Phillips and H. Winter, *Über die Frage des Gleitens in Kugel-Gleichganggelenken, (The Question of Sliding in Ball-Type Universal Joints),* VDI-Z, 1968.

55. Zb. Jaskiewicz, *Mechaniczne Napedy Samochodowe, Waly I Przeguby, (The Mechanical Drives of Motor Vehicles–Transmission Shafts and Joints,* Vol. 4), Warsaw: Wydawnictwa Komunikacji i Lacznosci, 1968.

56. W. H. Crouse, "Drive Lines," *Automotive Mechanics,* Chapter 27, McGraw-Hill Book Co., Inc. 1960, pp. 583-590.

57. *GWB Gelenkwellen Katalog,* Essen: Gelenkwellenbau, 1958.

58. "Universal Joints-The Mechanical Drives Reference Issue," *Machine Design,* Section 8, June, 1971, pp. 144-145.

59. C. F. Shelton, *The Effect of Manufacturing Variations on the Operation of the Buick Double Cardan Universal Joint,* Buick Motor Division and General Motors Institute, 1962.

60. J. M. Seaton, *Experimental Analysis of Driveline Requirements for a Three Joint Propeller Shaft,* Pontiac Motor Division and General Motors Institute, 1957.

61. G. Bowen, "Rubber Couplings for Drivelines," *The Journal of Automotive Engineering,* January, 1971, pp. 3-8.

62. "Rubber in Transmissions," *Automobile Engineer,* May, 1962.

63. *Elasticity in the Propulsion Members of Vehicles–Rubber in Transport Engineering,* Proceedings of a Conference held at Imperial College of Science and Technology, London, 1970.

64. "Universal Joints-The Mechanical Drives Reference Issue," *Machine Design,* Section 8, June, 1973, pp. 165-166.

65. A. C. Orr, *Design Study of the Automotive Double Cardan Joint,* Saginaw Steering Gear Division and General Motors Institute, 1959.

66. K. H. Hunt, "Constant Velocity Shaft Couplings: A General Theory," *Transactions of the ASME, Journal of Engineering for Industry,* May, 1973, pp. 455-464.

67. W. Ker Wilson, "Practical Solution of Torsional Vibration Problems," *Frequency Calculations,* Vol. 1, 3rd ed., John Wiley and Sons, Inc. 1956.

68. W. Ker Wilson, "Practical Solution of Torsional Vibration Problems," *Amplitude Calculations,* Vol. 2, London: Chapman and Hall, Ltd., 1963.

69. W. Ker Wilson, "Practical Solution of Torsional Vibration Problems," *Strength Calculations,* Vol. 3, London: Chapman and Hall, Ltd., 1965.

70. W. Ker Wilson, "Practical Solution of Torsional Vibration Problems," *Devices for Controlling Vibration,* Vol. 4, London: Chapman and Hall, Ltd., 1968.

71. V. Mashinostroeniya, "Determination of Axial Clearance in the Centre Cross Bearings of Universal Joint Shafts," *Russian Engineering Journal,* Vol. 54, No. 9, 1974, pp. 33-35.

72. B. P. Sveshnikov and B. A. Ivanov, "Load Distribution Between Rolling Elements in Universal Joint Needle Bearings," *Russian Engineering Journal,* Vol. 52, No. 8, 1972, pp. 28-30.

73. N. V. Rodzevich et.al., "Better Reliability from Propeller Shaft Needle Bearings," *Russian Engineering Journal,* Vol. 52, No. 5, 1972, pp. 3-5.

74. V. P. Voinov, B. A. Tyagelski, and K. S. Ponomarev,

The Fatigue Strength of the Joints on the Type of Propeller Shaft Welded by Friction, Translation No. 16/72, Translated from Russian by A. J. Greening, Motor Industry Research Association, England, 1972.

75. O. Saari, "How to Obtain Useful Speed Variation with Universal Joints," *Machine Design,* October, 1954, pp. 175-178.

76. R. V. Hutchinson, *Notes on "Pot-Type" Universal Joints,* Engineering Staff, GMC, February 27, 1958.

77. "Universal Joints-The Mechanical Drives Reference Issue," *Machine Design,* Chapt. 10, June, 1965, pp. 65-68.

78. "Universal Joints-The Mechanical Drives Reference Issue," *Machine Design,* Chapt. 10, September, 1967, pp. 65-68. 65-68.

79. F. F. Miller, "Constant-Velocity Universal Ball Joints," *Machine Design,* April 15, 1965, pp. 184-193.

80. J. H. Ferguson and F. Woodruff, "The Forgotten Forces in Couplings," *Machine Design,* September 6, 1973, pp. 146-150.

81. F. E. Mynard, "Les transmissions de rotation a couples d'emboitement," *Le Genie Civil,* Vol. 102, No. 23, June 10, 1933, pp. 539-541.

82. F. E. Mynard, "Nouveaux mecanismes de liaisons rotatives," *Le Genie Civil,* Vol. 105, No. 11, September 15, 1934, pp. 235-238.

83. F. Duditza, *Kardangelenkgetriebe und ihre Anwendungen,* Düsseldorf: VDI-Verlag GmbH, 1973.

84. L. L. Ruffle, *Design and Frictional Characteristics of Slipping Splines,* Saginaw Steering Gear Division and General Motors Institute, 1959.

85. E. R. Wagner, P.E., *Analysis of the Tri-Pot Universal Joint,* Saginaw Steering Gear Division, GMC, 1964.

86. R. P. Heise, *Solutions to Tractor Implement P.T.O. Drive Problems,* ASAE paper MC-71-304, 1971.

87. *The Gray Light of Dawn–A Discussion of "Booms" and Vibrations* Cadillac Motor Car Division, GMC, June, 1962.

88. *Pontiac Vibration Manual,* Pontiac Motor Division, GMC, January, 1968.

89. G. Marshall and W. Breindel, "Boosting Power Train Life with Engineered Elastomers," Reprinted from *Diesel and Gas Turbine Progress,* Lord Corporation, October, 1968.

90. R. Kohl, "Stopping Vibration with Dynamic Dampers," *Machine Design,* August 23, 1973, pp. 125-129.

91. J. Wright, "Isolating Engine Vibration," *Machine Design,* April, 1975, pp. 86-91.

92. N. W. Webster, *Neapco Equal Angle Driveshaft,* ASAE paper 76-1582, 1976.

93. C. Lessen, "An Approach to Laboratory Testing of Tractor Drive Trains," *Transactions of the ASAE,* 1975, pp. 48-50.

94. G. H. Sutherland, "Finding Bearing Loads Caused by Constant-Velocity U-Joints," *Machine Design,* April, 1978, pp. 55-59.

Index

American Axle v. Neapco - IPR2025-00091
PET_AAM_1012-0443

Index

absorber
transmission mounted tuned, 231-232
tuned, 235
untuned internal, 235
agricultural implement driveshaft
critical speed, 301-302
design parameters, 296-298
torque requirements, 303-304
types, 293-294
attenuators
axle noise, 235
bending, 235
driveline rumble, 235
start-up groan, 235
torsional, 235
axial thrust forces, 22
axle chuckle, 229
axle driveshafts
attachment methods, 316
construction of, 315-316
design parameters, 312-314
material selection, 317-318
stress analysis, 316-317
axle noise, 229

balance, 215
balancing, 323
limits, 217
machines, 217
methods, 217-218
ball spline Rzeppa universal joint
advantages, 151-152
applications, 153
components, 332
design, 151-152
disadvantages, 151
kinematics, 151
lubrication, 153
material selection, 152-153
rating procedure, 153
ball and trunnion universal joint
advantages, 82
applications, 83
components, 328-329
design, 77, 79-82
kinematics, 77-78
lubrication, 83
material selection, 82-83
phasing, 78
rating procedure, 83
bearing factor, 65, 72-74, 83, 87, 91, 326
bearing life, affected by
design techniques, 66-67
retention means, 67
sealing, 66
surface finish, 66
bearing seals, types
boot, 66
elastomer, 66
nonventing, 66
packing, 66
venting, 66
bipot joint
(*see* **ball and trunnion universal joint**)
(*see* **roller and trunnion universal joint**)
(*see* **sliding block and trunnion universal joint**)
bisecting angle plane
(*see* **constant velocity plane**)
body boom suppressor, 231
boom, 227
boot seal, 66

Cardan universal joint
advantages, 40
applications, 39-40, 74
components, 327-328
design, 62-70

American Axle v. Neapco - IPR2025-00091
PET_AAM_1012-0445

equations of motion and force, 40-43
kinematics, 40
lubrication, 71-72
material selection, 71
rating procedure, 72-74
size selection, 72-74
circumferential clearance, 64
clunk, 227
clutch tuning, 231
constant velocity
methods of achieving, 100
requirements for, 99
constant velocity plane, 99, 325
constant velocity universal joint, 323
ball spline Rzeppa, 151-153, 332
cross groove, 163-166, 332
double Cardan, 103-118, 331
double Cardan (trunnion pin type), 119-121, 331
double Cardan (twin ball and centering plate type), 123-125, 331
double offset (end motion type), 167-170, 332-333
double offset (fixed center type), 171-173, 333
Rzeppa, 145-150, 332
Tracta, 100, 127-129, 331
tripot (end motion type), 100, 131-140, 331
tripot (fixed center type), 100, 141-143, 331-332
Weiss (end motion type), 155-158, 332
Weiss (fixed center type), 159-162, 332
Corten-Dolan Theory, 31
cross groove universal joint
advantages, 163
applications, 166
components, 332
design, 164-165
disadvantages, 163
kinematics, 163-164
lubrication, 166
material selection, 165-166
rating procedure, 166

diametral clearance, 64
distortion energy theory, 317-318
double Cardan joint buzz, 228
double Cardan joint click, 228
double Cardan universal joint
advantages, 104
applications, 117-118
components, 112-116, 331
design of yokes, 116
kinematics, 104-107
limitations, 104
lubrication, 117
material selection, 116-117
rating procedure, 117
double Cardan universal joint (trunnion pin type)
advantages, 119
applications, 119, 121
components, 119-120, 331
design, 119-120
disadvantages, 119
kinematics, 119
lubrication, 120
material selection, 120
rating procedure, 121
double Cardan universal joint (twin ball and centering plate type)
applications, 125
components, 124, 331
design, 123-124
kinematics, 123
lubrication, 124-125
material selection, 124
rating procedure, 125
double offset universal joint (end motion type)
advantages, 167
applications, 170
components, 332-333
design, 167-169
disadvantages, 167, 169
kinematics, 167-168
lubrication, 170
material selection, 169-170
rating procedure, 170
double offset universal joint (fixed center type)
advantages, 171
applications, 173
components, 333
design, 171-172
kinematics, 171
lubrication, 173
material selection, 172-173
rating procedure, 173
driveline arrangements, in
agricultural implements, 5, 10, 294, 307
military vehicles, 4
passenger cars, 3-5, 7-8, 10, 18-22
trucks, 7-8, 21
driveline rumble attenuator, 235
drivetrain critical speed, 228, 233-234
driveshaft, 323
balance, 21-22, 215-219
components, 263, 311-318, 323
critical speed, 267-277, 301-302
design, 21, 296-298
dimensions, 294-298, 323
disturbance levels, 296-298
drivetrain disturbances
driveshaft induced, 228-229, 233-234
powerplant induced, 227, 231-233
rear axle induced, 229, 235
universal joint induced, 227-228, 232-233

American Axle v. Neapco - IPR2025-00091
PET_AAM_1012-0446

duty cycle, 31
dynamic secondary couple force limits, 202

elastomer seals, 66
end motion universal joint, 325
end yoke, 69-70, 209-210
excitation
inertia, 61
secondary couple, 61-62
torsional, 60-61
excitation limits
inertia, 19, 233
secondary couple, 19-20, 233
torsional, 19, 233

fatigue life, 31
fixed center universal joint, 325
flange yoke, 70, 210
flywheel
(see **inertia disc)**
funnel angle, 149

gear rattle, 227
gross vehicle weight categories, 24

Hertz contact stress, 337-347
homokinetic plane
(see **constant velocity plane)**
Hooke universal joint
(see **Cardan universal joint)**

Hotchkiss drive, 3

inboard balancing procedure, 218-219
inertia coast equivalent angle, 49, 325
inertia disc, 235
inertia drive equivalent angle, 49, 325
inertia equivalent angle, 48-50, 325
inertia vibration, 228
instantaneous center, 99, 133-134
interference fit spline
(see **zero backlash spline)**
intersecting shaft arrangement, 51-55
involute spline, 185-186

Johnson's apparent elastic limit method, 279, 412-413

joint angle, 325
liners, 233, 263, 323
load cycle, 31

major diameter fit spline, 186
maximum applied torque, 23-24
maximum tractive force, 25-29
Miner's Theory, 31
mode shaping technique, 232

near constant velocity universal joint, 323
nonconstant velocity universal joint, 323
ball and trunnion, 77-83, 328-329
Cardan or Hooke, 39-74, 327-328
roller and trunnion, 85-87, 329-330
sliding block and trunnion, 89-91, 330
nonself-supporting universal joint, 325
nonventing seals, 66

open driveline
(see **Hotchkiss drive)**
overbalancing
(see **inboard balancing procedure)**

packing seals, 66
parallel shaft arrangement, 51-53
parallel side splines, 186-187
permanent fit splines, 187
phase angle, 323
pot coupling, 91
precession, 66
PTO types
engine crankshaft, 287-288
engine flywheel, 288
split-shaft, 289
transmission mounted, 288-289
responding systems, 225
rolling element spline, 193-194
roller and trunnion universal joint
advantages, 85-86
applications, 87
components, 329-330
design, 85-86
kinematics, 85
lubrication, 86-87
material selection, 86
rating procedure, 87
rubber couplings, 93-94, 330
rubber element tubes
applications, 241-244, 248, 257
constructions, 239-240, 243-244, 246-247, 323
design parameters, 241
fatigue life, 244
material selection, 246
Rzeppa universal joint
advantages, 145
applications, 145, 150
components, 332
design, 145-149
kinematics, 145-146
lubrication, 150
material selection, 149-150
rating procedure, 150

safe speed factor, 270-271
seals, 21
secondary couple forces, 50-60, 202-203, 326
secondary couple vibration, 228
self-supporting universal joint, 323
shaft support bearings
design, 201-203

American Axle v. Neapco - IPR2025-00091
PET_AAM_1012-0447

functions, 203, 205, 211
lubrication, 201
shock torque, 23
shudder, 227
side fit spline, 186
single joint coupling shafts, 21, 323
sliding block and trunnion universal joint
advantages, 89
applications, 91
components, 330
design, 89-90
kinematics, 89
lubrication, 91
material selection, 90
rating procedure, 91
sliding spline, 186
slip, 323
slip spline
(*see* **sliding spline**)
slip yoke, 69
spline
applications, 195
design, 185
function, 210-211
lubrication, 190-191
material selection, 188-189
sealing methods, 190-192
stress analysis, 187-188
surface treatments, 189-190
types, 185-187, 192-194
spline grunt, 77, 228, 234
start-up groan, 229
stationary implement driveshaft, 302
swaged tube, 180, 323
swing diameter, 325
tip-in-moan, 227
torque, 17-18, 23-24
torque tube drive, 3-4
torsional dampers
applications, 260
design, 259
location, 259
torsional equivalent angle, 46, 60, 325
torsional vibration, 228
Tracta universal joint
advantages, 127
applications, 129
components, 331
design, 100, 128-129
disadvantages, 127
kinematics, 127-128
lubrication, 129
material selection, 129
rating procedure, 129
tripot universal joint (end motion type)
advantages, 131
applications, 131
components, 331
design, 100, 131, 137-139
disadvantages, 131
kinematics, 131-134
lubrication, 140
material selection, 139-140
rating procedure, 140
tripot universal joint (fixed center type)
advantages, 141
applications, 143
components, 331-332
design, 100, 141-142
disadvantages, 141
kinematics, 141-142
lubrication, 143
material selection, 142-143
rating procedure, 143
tube diameter, 323
tube yoke, 68-69
tuned absorber, 235

unbalance, 215-216
universal joint
constant velocity types (*see* **constant velocity universal joint**)
nonconstant velocity types (*see* **nonconstant velocity universal joint**)
untuned internal absorber, 235

vehicle driveline analysis
four-wheel drive light-duty trucks, 27-29
front wheel drive passenger cars, 26-27
rear wheel drive passenger cars, 25-26
venting seals, 66
vibration
(*see* **inertia vibration**)
(*see* **secondary couple vibration**)
(*see* **torsional vibration**)

Weiss universal joint (end motion type)
advantages, 155
applications, 155
components, 332
design, 155-157
disadvantages, 155-156
kinematics, 156
lubrication, 158
material selection, 157-158
rating procedure, 158
Weiss universal joint (fixed center type)
advantages, 159
applications, 162
components, 332
design, 159-161
disadvantages, 159
kinematics, 159-160
lubrication, 161
material selection, 161
rating procedure, 162
weld yoke, 68-69
wheel slip torque, 25-29

yoke ears, 67-68

zero backlash spline, 186

American Axle v. Neapco - IPR2025-00091
PET_AAM_1012-0448