US009863464B2

(12) **United States Patent**
Hosen et al.

(10) **Patent No.: US 9,863,464 B2**
(45) **Date of Patent: Jan. 9, 2018**

(54) **DUST COVER**

(71) Applicant: **NOK CORPORATION**, Tokyo (JP)

(72) Inventors: **Tatsuro Hosen**, Fujisawa (JP); **Koji Kanagawa**, Makinohara (JP)

(73) Assignee: **NOK CORPORATION**, Tokyo (JP)

(*) Notice: Subject to any disclaimer, the term of this patent is extended or adjusted under 35 U.S.C. 154(b) by 0 days.

(21) Appl. No.: **15/518,841**

(22) PCT Filed: **Oct. 19, 2015**

(86) PCT No.: **PCT/JP2015/079440**
§ 371 (c)(1),
(2) Date: **Apr. 13, 2017**

(87) PCT Pub. No.: **WO2016/063832**
PCT Pub. Date: **Apr. 28, 2016**

(65) **Prior Publication Data**

US 2017/0234361 A1 Aug. 17, 2017

(30) **Foreign Application Priority Data**

Oct. 22, 2014 (JP) 2014-215325
Nov. 19, 2014 (JP) 2014-234307

(51) **Int. Cl.**
F16C 11/06 (2006.01)
F16J 15/52 (2006.01)

(52) **U.S. Cl.**
CPC ***F16C 11/0671*** (2013.01); ***F16J 15/52*** (2013.01)

(58) **Field of Classification Search**
CPC F16C 11/0666; F16C 11/0676; F16C 11/0671; F16J 3/04; F16J 3/042; F16J 15/52; Y10T 403/315; Y10T 403/32729
See application file for complete search history.

(56) **References Cited**

U.S. PATENT DOCUMENTS

4,322,175 A * 3/1982 Szczesny F16B 21/20 277/635
5,066,159 A * 11/1991 Urbach F16C 11/0666 277/635

(Continued)

FOREIGN PATENT DOCUMENTS

DE 102011052532 A1 * 2/2013 ..... F16J 3/042
EP 1010905 A1 * 6/2000 ..... F16C 11/0671

(Continued)

Primary Examiner — Daniel J Wiley
(74) *Attorney, Agent, or Firm* — Harness, Dickey & Pierce, P.L.C.

(57) **ABSTRACT**

A dust cover in which an improvement in sealing performance is achieved. A dust cover **100** used in a ball joint includes a seal main body made of an elastic body and integrally having a body portion **110**, a fixed portion **130** that is provided on one end side of the body portion **110**, and a seal portion **120** that is provided on the other end side of the body portion **110**, and an annular auxiliary seal **150** made of resin and provided in the seal portion **120**. The seal portion **120** includes an inner peripheral seal portion and a dust lip **122**, and the auxiliary seal **150** includes an auxiliary inner peripheral seal portion **151**, an auxiliary dust seal portion, and a supported portion **153** that is supported by a collar fixed to a shaft portion on an opposite side to the auxiliary dust seal portion in an axial direction.

8 Claims, 14 Drawing Sheets

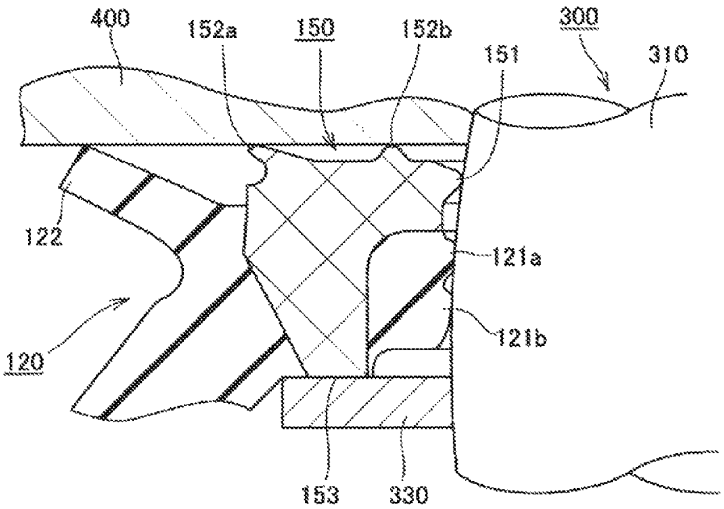

(56) **References Cited**

U.S. PATENT DOCUMENTS

6,308,959	B1 *	10/2001	Sokolihs	F16J 3/046 277/394
6,334,620	B1 *	1/2002	Reetz	B60G 7/005 277/560
6,814,521	B2 *	11/2004	Suzuki	B60G 7/005 277/635
6,834,863	B2 *	12/2004	Urbach	F16C 11/0671 277/555
8,414,215	B2 *	4/2013	Langendoen	F16C 11/0676 277/635
9,206,837	B2 *	12/2015	Ishimori	F16C 11/06
9,221,225	B2 *	12/2015	Idies	F16C 11/06
9,254,867	B2 *	2/2016	Hosen	F16C 11/0671
9,528,547	B2 *	12/2016	Hosen	F16J 3/042
2003/0202842	A1	10/2003	Abels	
2005/0042022	A1	2/2005	Abels et al.	
2007/0231060	A1 *	10/2007	Abels	F16C 11/0671 403/76
2009/0047063	A1 *	2/2009	Shirai	F16C 11/0604 403/133
2009/0209353	A1 *	8/2009	Abels	B29C 45/2612 464/106
2011/0222959	A1 *	9/2011	Beutler	F16C 11/0671 403/122
2015/0030376	A1 *	1/2015	Shimazawa	F16C 11/0671 403/134
2015/0300502	A1	10/2015	Hosen	

FOREIGN PATENT DOCUMENTS

EP	2012028	A2 *	1/2009	F16C 11/0671
JP	H03-032211	U	3/1991	
JP	H07-019621	U	4/1995	
JP	H08-200517	A	8/1996	
JP	H09-158941	A	6/1997	
JP	H11-63245	A	3/1999	
JP	2004-519637	A	7/2004	
JP	2005-536700	A	12/2005	
JP	2007532831	A	11/2007	
JP	2014-084967	A	5/2014	
JP	2014-181741	A	9/2014	
WO	2014-020980	A1	2/2014	
WO	WO-2015186441	A1 *	12/2015	F16C 11/06
WO	WO-2016027590	A1 *	2/2016	F16J 3/04

* cited by examiner

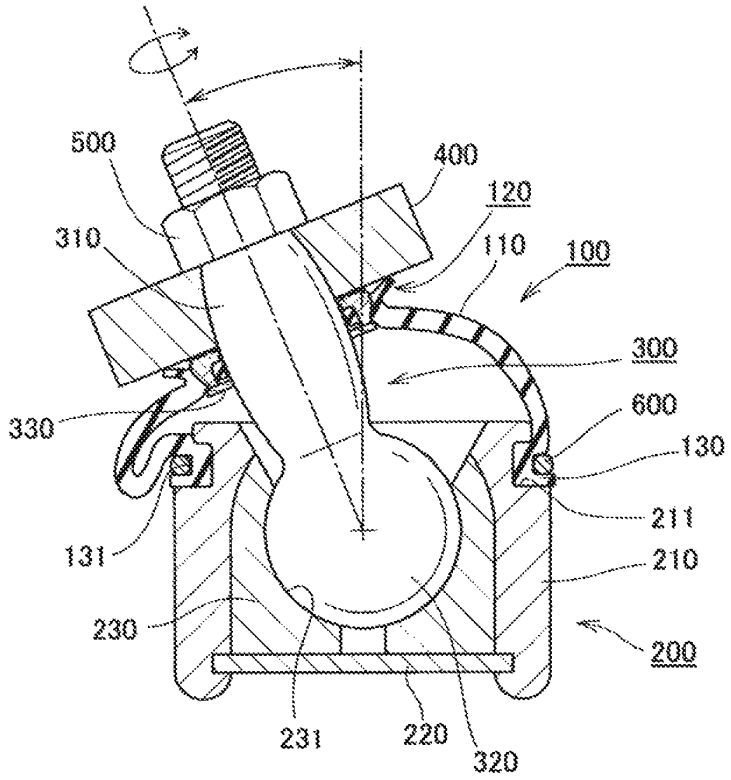
500
400
120
310
110
100
300
330
600
130
211
131
210
230
200
231
220
320

Fig.1

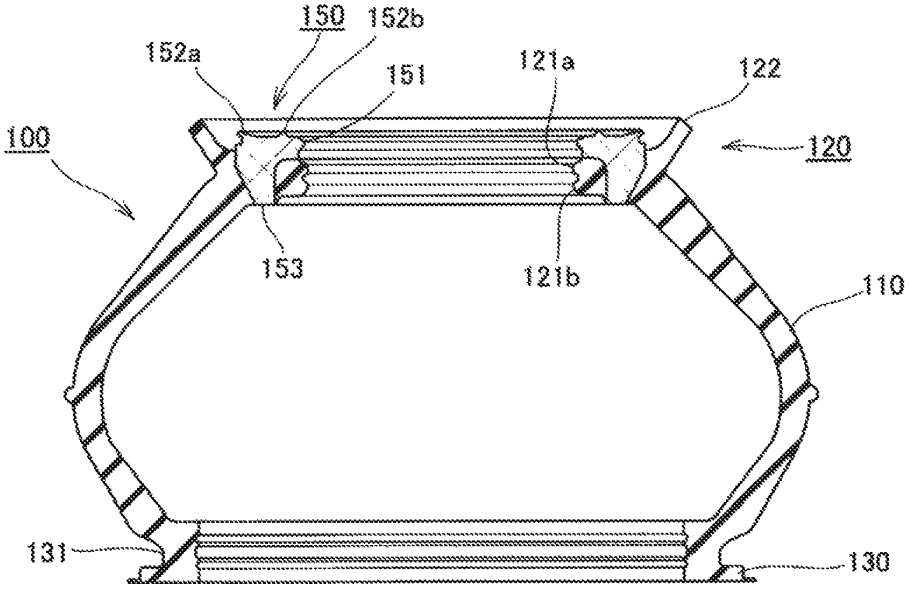

Fig.2

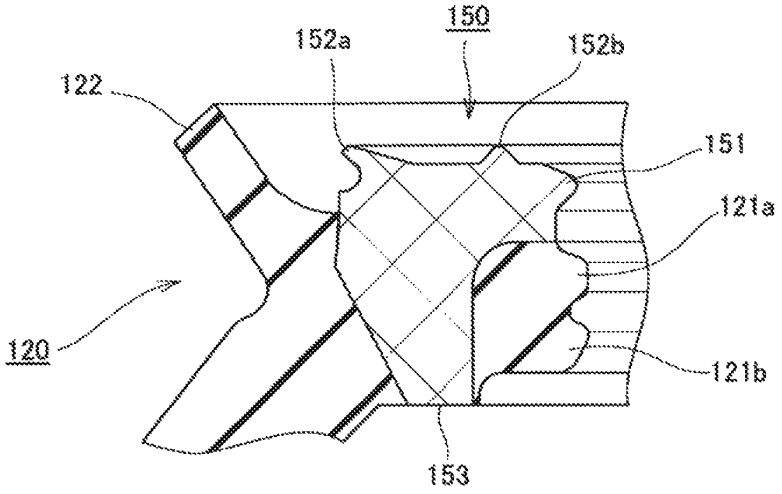

Fig.3

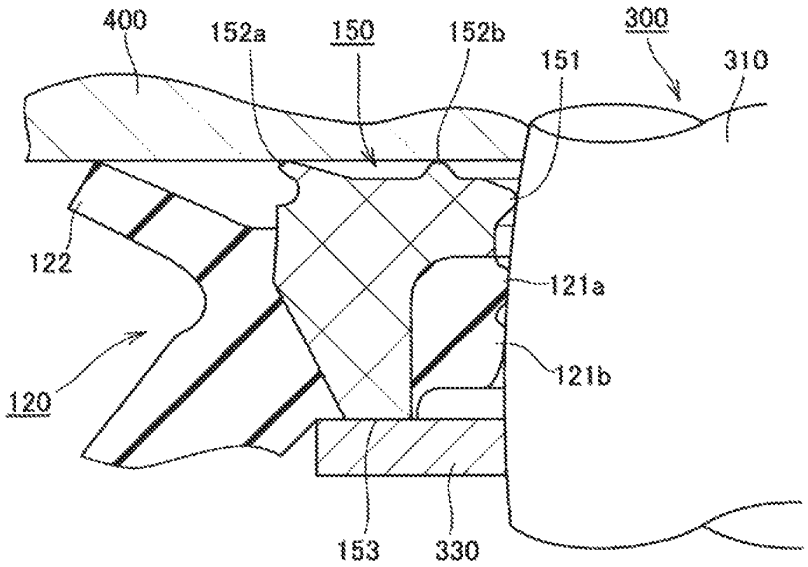

Fig.4

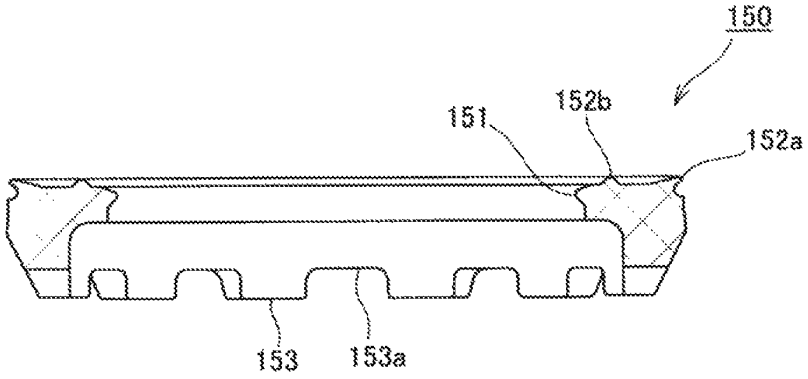

Fig.5

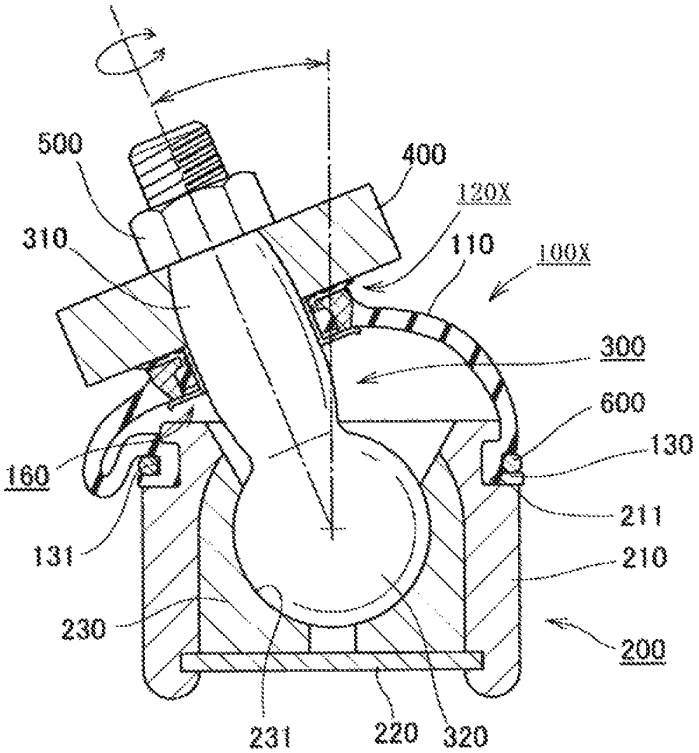
500
400
120X
310
110
100X
300
600
130
160
211
131
210
230
200
231
220
320

Fig.6

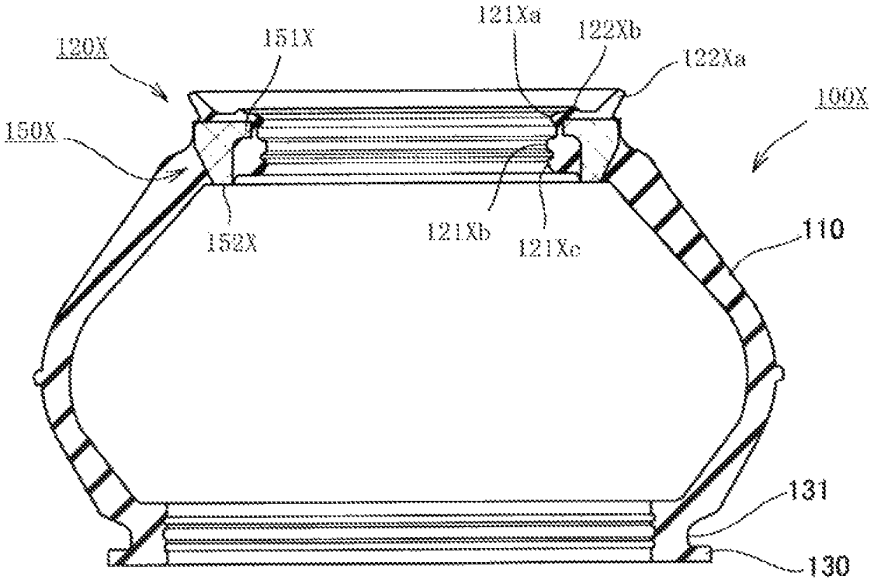
120X
151X
121Xa
122Xb
122Xa
100X
150X
152X
121Xb
121Xc
110
131
130

Fig.7

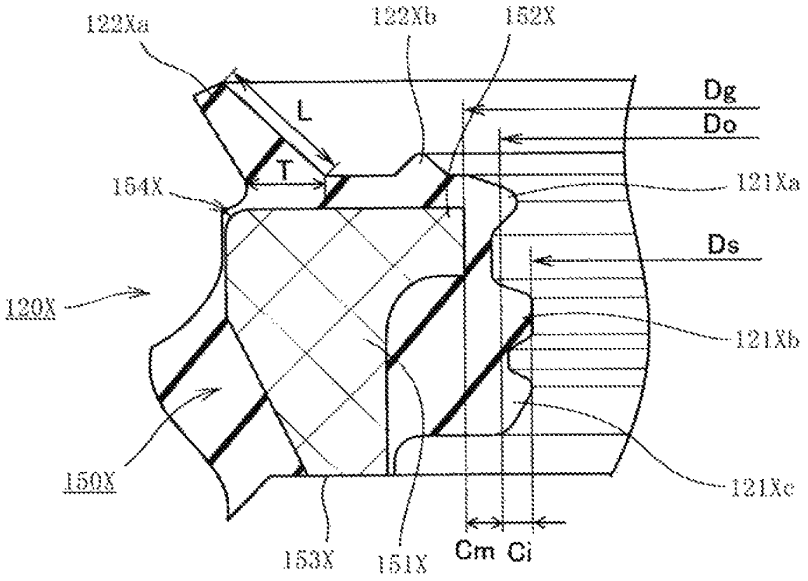
122Xa
122Xb
152X
L
T
Dg
Do
154X
121Xa
Ds
120X
121Xb
150X
121Xc
153X
151X
Cm
Ci

Fig.8

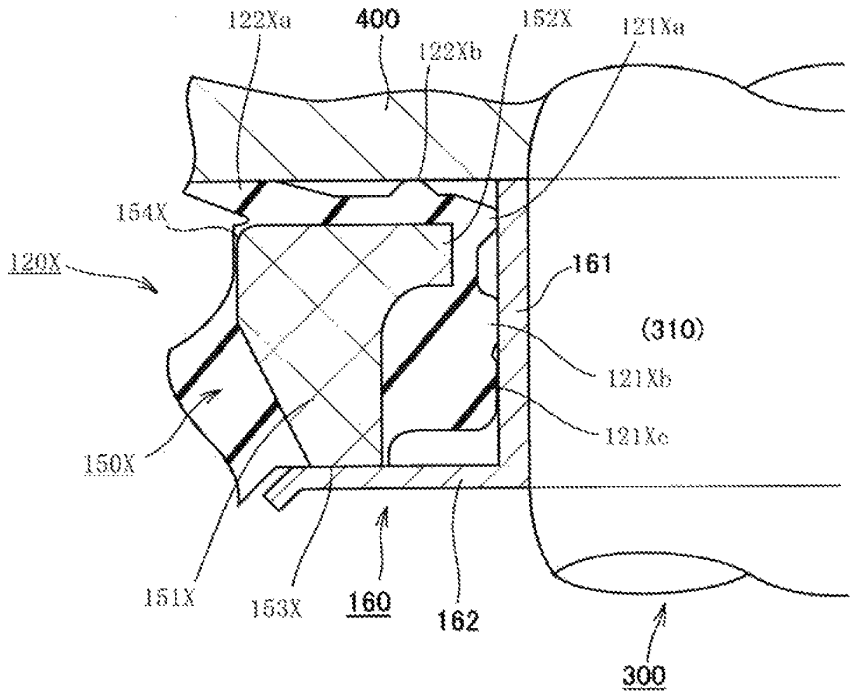
122Xa
400
152X
121Xa
122Xb
154X
120X
161
(310)
121Xb
121Xc
150X
151X
153X
160
162
300

Fig.9

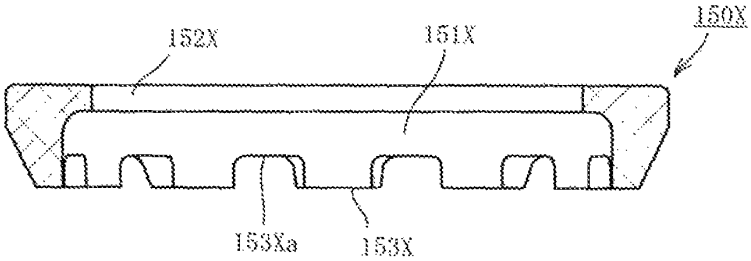

Fig.10

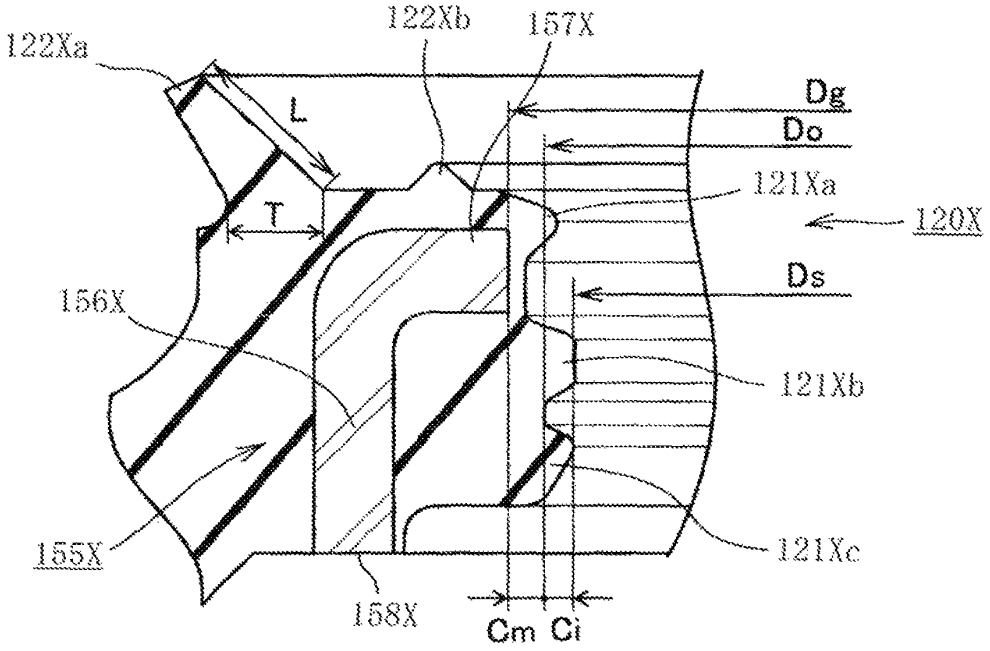
122Xa
122Xb
157X
L
Dg
Do
121Xa
120X
T
Ds
156X
121Xb
155X
121Xc
158X
Cm
Ci

Fig.11

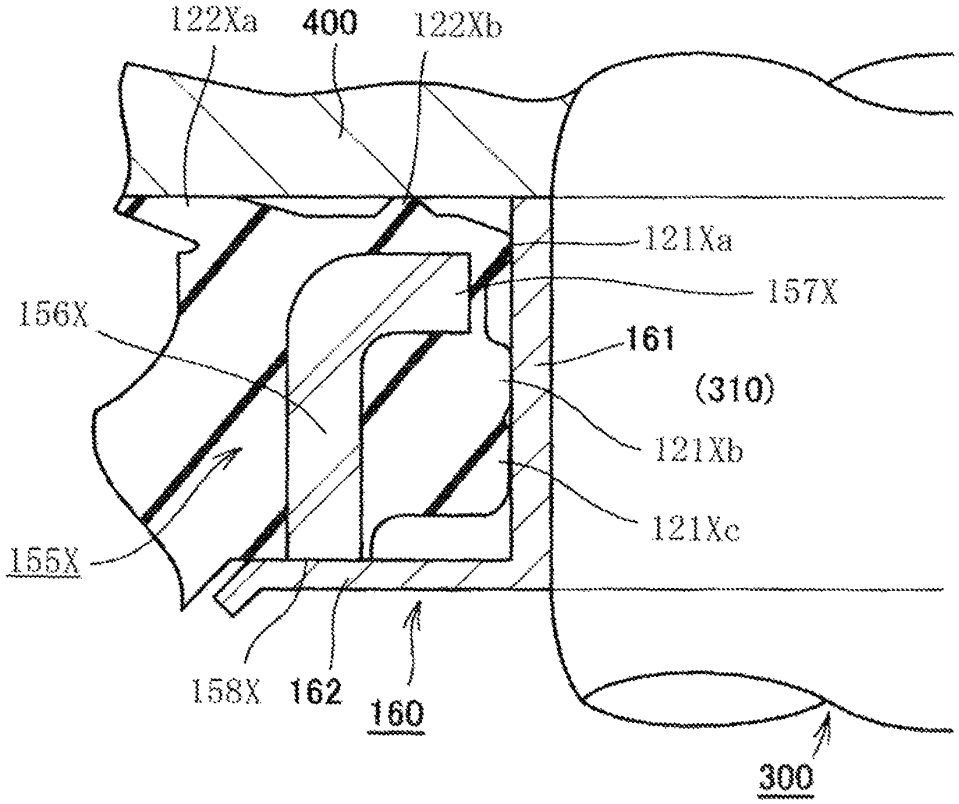
122Xa
400
122Xb
121Xa
157X
156X
161
(310)
121Xb
121Xc
155X
158X
162
160
300

Fig.12

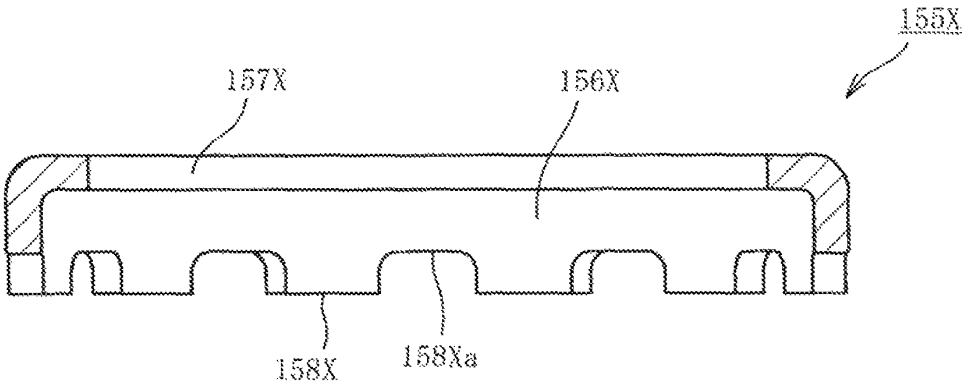

Fig.13

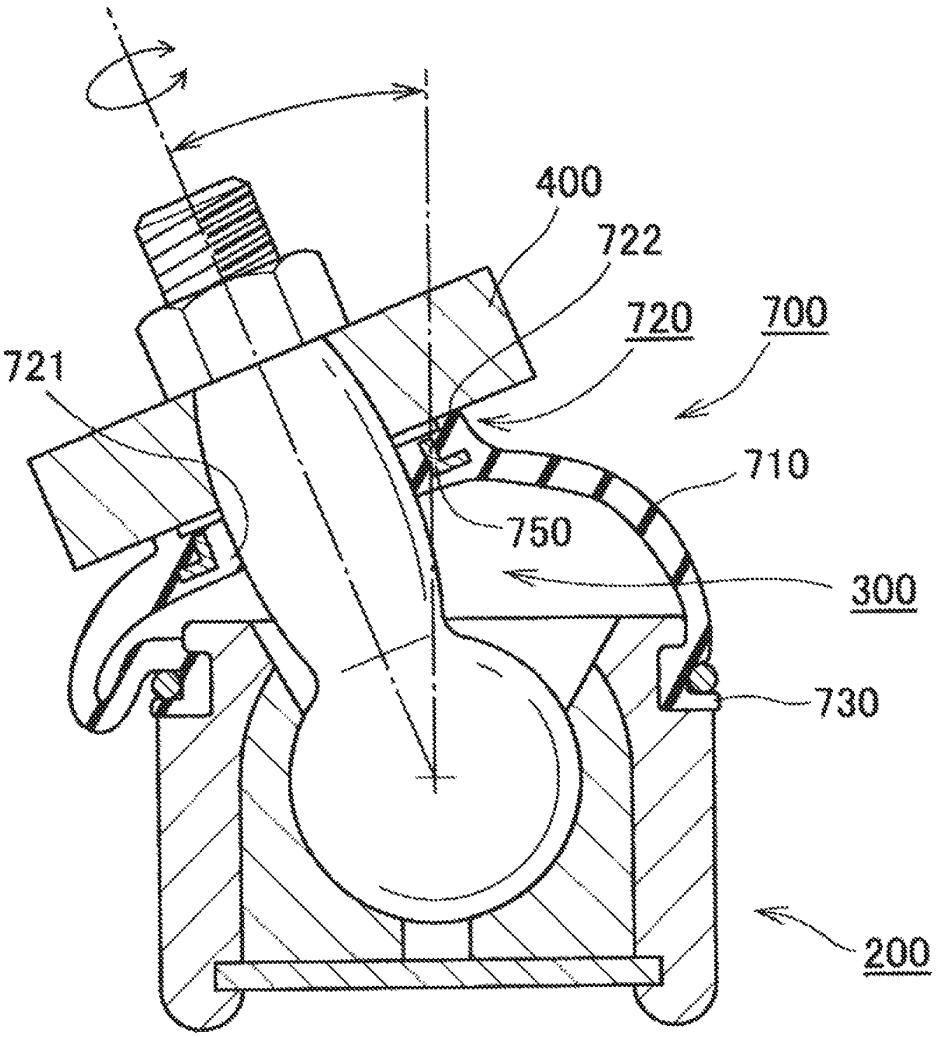

Fig.14

DUST COVER

CROSS-REFERENCE TO RELATED APPLICATIONS

This application is a National Stage of International Application No. PCT/2015/079440, filed Oct. 19, 2015, which claims priority to Japanese Application No. 2014-234307, filed Nov. 19, 2014 and Japanese Application No. 2014-215325, filed Oct. 22, 2014. The entire disclosures of each of the above applications are incorporated herein by reference.

FIELD

The present disclosure relates to a dust cover used in a ball joint provided in various devices of a vehicle or the like.

BACKGROUND

Conventionally, in a ball joint provided in various devices of a vehicle or the like, a dust cover is used in order to prevent entry of water, dust, etc. into a joint portion and prevent an outflow of grease from the joint portion. The dust cover used in the ball joint according to a prior art will be described with reference to FIG. **14**. FIG. **14** is a schematic cross-sectional view of the ball joint and the dust cover mounted to the ball joint according to the prior art.

The ball joint includes a ball stud **300** that has a spherical portion at one end of a shaft portion, a socket **200** that rotatably and swingably supports the ball stud **300**, and a knuckle **400** that is fixed to an opposite side of the shaft portion to the spherical portion. A dust cover **700** includes a seal main body made of an elastic body and integrally having a deformable film-like body portion **710**, a fixed portion **730** that is provided on one end side of the body portion **710** and is fixed to the socket **200**, and a seal portion **720** that is provided on the other end side of the body portion **710**. Herein, the seal portion **720** includes an inner peripheral seal portion **721** that is provided so as to be slidable on the shaft portion in the ball stud **300**, and a dust seal portion **722** that is provided so as to be slidable on the knuckle **400**.

In addition, in the seal portion **720**, a reinforcing ring **750** made of metal or resin is buried. Thus, by burying the reinforcing ring **750** in the seal portion **720**, it becomes possible to improve sealing performance by the inner peripheral seal portion **721** and the dust seal portion **722**.

Herein, for example, as shown in FIG. **14**, in a state in which the ball stud **300** is tilted to the left in the drawing, the left part of the body portion **710** in the drawing is compressed, and the right part thereof in the drawing is extended. With this, in the right part in the drawing, a force acts on the inner peripheral seal portion **721** such that the inner peripheral seal portion **721** is caused to move away from the shaft portion in the ball stud **300**, and a force acts on the dust seal portion **722** such that the dust seal portion **722** is caused to move away from the knuckle **400**. As described above, by burying the reinforcing ring **750** in the seal portion **720**, the inner peripheral seal portion **721** is prevented from moving away from the shaft portion, and the dust seal portion **722** is prevented from moving away from the knuckle **400**.

However, in a low temperature environment, elasticity of each of the inner peripheral seal portion **721** and the dust seal portion **722** that are made of rubber is significantly lost. In addition, with a permanent set resulting from compressive deformation at a low temperature, gaps may be formed between the inner peripheral seal portion **721** and the shaft portion in the ball stud **300** and between the dust seal portion **722** and the knuckle **400**. With this, a sealing function may be reduced.

Note that it is possible to more reliably prevent the inner peripheral seal portion **721** from moving away from the shaft portion in the ball stud **300** by reducing the inner diameter of the reinforcing ring **750**. However, as the inner diameter of the reinforcing ring **750** is reduced, a pressing force to the shaft portion by the inner peripheral seal portion **721** is increased correspondingly, and it becomes difficult for the inner peripheral seal portion **721** to slide on the shaft portion. With this, there arises a new problem that the film-like body portion **710** is twisted. Accordingly, the measure by reducing the inner diameter of the reinforcing ring **750** has limitations.

CITATION LIST

Patent Literature

[PTL 1] Japanese Patent Application Laid-open No. H9-158941

[PTL 2] Japanese Utility Model Application Laid-open No. H7-19621

[PTL 3] Japanese Patent Application Laid-open No. H8-200517

[PTL 4] Japanese Translation of PCT Application No. 2007-532831

[PTL 5] Japanese Utility Model Application Laid-open No. H3-32211

[PTL 6] Japanese Patent Application Laid-open No. H11-63245

[PTL 7] WO 2014/020980

SUMMARY

Technical Problem

An object of the present disclosure is to provide a dust cover in which an improvement in sealing performance is achieved.

Solution to Problem

The present disclosure has adopted the following means in order to solve the above problem.

That is, the dust cover of the present disclosure is a dust cover used in a ball joint including (a) a ball stud that has a spherical portion at one end of a shaft portion; (b) a socket that has a bearing of the spherical portion and rotatably and swingably supports the ball stud; and (c) an annular member that is fixed on an opposite side of the shaft portion to the spherical portion (or a coupling member that couples to the shaft portion on an opposite side of the shaft portion to the spherical portion), the dust cover including (d) a seal main body made of an elastic body and integrally having (d1) a deformable body portion; (d2) a fixed portion that is provided on one end side of the body portion and is fixed to the socket; and (d3) a seal portion that is provided on another end side of the body portion and is provided so as to be slidable on the shaft portion (the present disclosure includes the case of another member provided on the outer peripheral surface of the shaft portion in addition to the shaft portion itself in the ball stud; the same applies to the following description) and the annular member (or the coupling member); and (e) an annular auxiliary seal made of resin and provided in the seal portion, wherein the seal portion

includes: (d3-1) an inner peripheral seal portion that is slidable on an outer peripheral surface of the shaft portion; and (d3-2) a dust seal portion that is slidable on an end surface of the annular member (or the coupling member), and the auxiliary seal includes: (e1) an auxiliary inner peripheral seal portion that is slidable on the outer peripheral surface of the shaft portion; (e2) an auxiliary dust seal portion that is slidable on the end surface of the annular member (or the coupling member); and (e3) a supported portion that is supported by a fixed member fixed to the shaft portion on an opposite side to the auxiliary dust seal portion in an axial direction (the present disclosure includes the case where the fixed member is provided integrally with the shaft portion).

According to the present disclosure, since the auxiliary seal made of resin is provided, even in a state in which the sealing function of the seal portion in the seal main body made of an elastic body is not adequately exerted in a low temperature environment or the like, sealing performance is maintained by the auxiliary seal.

In addition, in the auxiliary seal, the inner peripheral surface side and both end sides in the axial direction are supported. That is, the auxiliary inner peripheral seal portion is slidably in contact with the shaft portion in the ball stud on the inner peripheral surface side of the auxiliary seal, and hence the inner peripheral surface side of the auxiliary seal is supported by the shaft portion. On one end side in the axial direction in the auxiliary seal, the auxiliary dust seal portion is slidably in contact with the end surface of the annular member fixed to the shaft portion (or the coupling member that couples to the shaft portion on the opposite side of the shaft portion to the spherical portion). Accordingly, one end side of the auxiliary seal is supported by the annular member (or the coupling member). In addition, on the other end side in the axial direction in the auxiliary seal, the supported portion is supported by the fixed member fixed to the shaft portion. Consequently, the attitude of the auxiliary seal with respect to the ball stud and the annular member (or the coupling member) is stably maintained irrespective of the attitude of the ball stud with respect to the socket. With this, the sealing performance by the auxiliary seal is stably exerted irrespective of the attitude of the ball stud with respect to the socket.

In addition, the attitude of the auxiliary seal with respect to the ball stud and the annular member (or the coupling member) is stably maintained, whereby the attitude of the seal portion in the seal main body with respect to the ball stud and the annular member (or the coupling member) is also stably maintained. With this, the sealing performance by the seal portion is also stably exerted irrespective of the attitude of the ball stud with respect to the socket.

A plurality of slits may be formed on the opposite side of the auxiliary seal to the auxiliary dust seal portion in the axial direction, and a part that is provided with the inner peripheral seal portion and a part that is provided with the dust seal portion in the seal portion may be connected to each other via the slits.

By adopting this configuration, it is possible to provide the auxiliary seal made of resin that includes the auxiliary inner peripheral seal portion and the auxiliary dust seal portion in the seal portion made of an elastic body that includes the inner peripheral seal portion and the dust seal portion.

A resin material used for the auxiliary seal may be higher in low temperature resistance than a rubber material used for the seal main body.

With this, even when the sealing performance of the seal portion in the seal main body is reduced in the low temperature environment, the sealing performance of the auxiliary seal is maintained.

In addition, another dust cover of the present disclosure is a dust cover used in a ball joint including: (a) a ball stud that has a spherical portion at one end of a shaft portion; (b) a socket that has a bearing of the spherical portion and rotatably and swingably supports the ball stud; and (c) an annular member that is fixed on an opposite side of the shaft portion to the spherical portion (or a coupling member that couples to the shaft portion on an opposite side of the shaft portion to the spherical portion), the dust cover including (d) a seal main body made of an elastic body and integrally having: (d1) a deformable body portion; (d2) a fixed portion that is provided on one end side of the body portion and is fixed to the socket; and (d3) a seal portion that is provided on another end side of the body portion and is provided so as to be slidable on the shaft portion (the present disclosure includes the case of another member provided on the outer peripheral surface of the shaft portion in addition to the shaft portion itself in the ball stud. The same applies to the following description.) and the annular member (or the coupling member); and (e) a reinforcing ring made of resin or metal and provided in the seal portion, wherein the seal portion includes: (d3-1) an inner peripheral seal portion that is slidable on an outer peripheral surface of the shaft portion; and (d3-2) a dust seal portion that is slidable on an end surface of the annular member (or the coupling member), wherein the inner peripheral seal portion has (d3-1-1) a first inner peripheral convex portion that is slidable on the outer peripheral surface of the shaft portion; and (d3-1-2) a second inner peripheral convex portion that is provided adjacent to the first inner peripheral convex portion and closer to the one end side than the first inner peripheral convex portion, and is slidable on the outer peripheral surface of the shaft portion, the reinforcing ring includes: (e1) a supported portion that is supported by a fixed member fixed to the shaft portion on the one end side (the present disclosure includes the case where the fixed member is provided integrally with the shaft portion); and (e2) an inward flange portion that is provided on the other end side and is buried in the seal portion, wherein a tip of the inward flange portion is provided so as to be positioned between a radially inward foremost end portion of the first inner peripheral convex portion and a radially inward foremost end portion of the second inner peripheral convex portion in an axial direction.

According to the present disclosure, in the reinforcing ring provided in the seal portion, the supported portion that is supported by the fixed member fixed to the shaft portion is provided. Consequently, it is possible to stably maintain the attitude of the seal portion with respect to the ball stud and the annular member (or the coupling member) irrespective of the attitude of the ball stud with respect to the socket. With this, the sealing performance by the seal portion is stably exerted irrespective of the attitude of the ball stud with respect to the socket. In addition, the tip of the inward flange portion is provided so as to be positioned between the radially inward foremost end portion of the first inner peripheral convex portion and the radially inward foremost end portion of the second inner peripheral convex portion in the axial direction. With this, it is possible to prevent a pressing force to the shaft portion by the first inner peripheral convex portion and the second inner peripheral convex portion from becoming excessively large. Consequently, it is possible to prevent sliding resistance between the first and second inner peripheral convex portions and the shaft por-

tion from becoming excessively large while exerting the sealing performance by the first inner peripheral convex portion and the second inner peripheral convex portion.

A difference between an outer diameter of a part of the shaft portion on which the second inner peripheral convex portion slides and an inner diameter of the tip of the inward flange portion may be larger than a difference between the outer diameter and an inner diameter of the radially inward foremost end portion of the second inner peripheral convex portion.

With this, it becomes possible to increase the thickness of a part of the seal main body that covers the tip of the inward flange portion to a certain degree while preventing the sliding resistance by the second inner peripheral convex portion from becoming excessively large. With this, it is possible to prevent a reduction in moldability when the seal main body is molded.

The dust seal portion may have a dust lip that extends radially outwardly toward a surface side of the annular member (or the coupling member), and the dust lip may satisfy $0.45 \leq T \div L \leq 0.6$, where T represents a width of a base of the dust lip, and L represents a length of the dust lip.

With this, it is possible to stabilize the sealing performance by the dust lip for a long time period.

Note that the individual configurations described above may be adopted by being combined together whenever possible.

Advantageous Effects of the Disclosure

Thus, according to the present disclosure, it is possible to improve the sealing performance.

DRAWINGS

FIG. **1** is a schematic cross-sectional view of a ball joint and a dust cover mounted to the ball joint according to Embodiment 1 of the present disclosure.

FIG. **2** is a schematic cross-sectional view of the dust cover according to Embodiment 1 of the present disclosure.

FIG. **3** is a schematic cross-sectional view in which a part in the vicinity of a seal portion in the dust cover according to Embodiment 1 of the present disclosure is enlarged.

FIG. **4** is a schematic cross-sectional view in which the part in the vicinity of the seal portion in the dust cover is enlarged in a state in which the dust cover according to Embodiment 1 of the present disclosure is mounted to the ball joint.

FIG. **5** is a schematic cross-sectional view of an auxiliary seal according to Embodiment 1 of the present disclosure.

FIG. **6** is a schematic cross-sectional view of a ball joint and a dust cover mounted to the ball joint according to Embodiment 2 of the present disclosure.

FIG. **7** is a schematic cross-sectional view of the dust cover according to Embodiment 2 of the present disclosure.

FIG. **8** is a schematic cross-sectional view in which a part in the vicinity of a seal portion in the dust cover according to Embodiment 2 of the present disclosure is enlarged.

FIG. **9** is a schematic cross-sectional view in which the part in the vicinity of the seal portion in the dust cover is enlarged in a state in which the dust cover according to Embodiment 2 of the present disclosure is mounted to the ball joint.

FIG. **10** is a schematic cross-sectional view of a reinforcing ring according to Embodiment 2 of the present disclosure.

FIG. **11** is a schematic cross-sectional view in which a part in the vicinity of a seal portion in a dust cover according to Embodiment 3 of the present disclosure is enlarged.

FIG. **12** is a schematic cross-sectional view in which the part in the vicinity of the seal portion in the dust cover is enlarged in a state in which the dust cover according to Embodiment 3 of the present disclosure is mounted to a ball joint.

FIG. **13** is a schematic cross-sectional view of a reinforcing ring according to Embodiment 3 of the present disclosure.

FIG. **14** is a schematic cross-sectional view of a ball joint and a dust cover mounted to the ball joint according to a prior art.

DETAILED DESCRIPTION

Hereinbelow, with reference to the drawings, a mode for carrying out the disclosure will be illustratively described in detail based on embodiments. It should be noted that, however, unless otherwise specified expressly, the dimensions, materials, shapes, relative arrangements of components, etc. described in these embodiments are not intended to limit the scope of the present disclosure to the dimensions, materials, shapes, and relative arrangements thereof.

Embodiment 1

With reference to FIGS. **1** to **5**, a dust cover according to Embodiment 1 of the present disclosure will be described. FIG. **1** is a schematic cross-sectional view of a ball joint and the dust cover mounted to the ball joint according to Embodiment 1 of the present disclosure. Note that FIG. **1** shows the cross-sectional view obtained by cutting using a plane that includes the central axis of a shaft portion of a ball stud provided in the ball joint. FIG. **2** is a schematic cross-sectional view of the dust cover according to Embodiment 1 of the present disclosure. FIG. **2** shows the cross-sectional view obtained by cutting using a plane that includes the central axis of the annular dust cover in a state in which the dust cover is not deformed. FIG. **3** is a partially enlarged view of FIG. **2**, and is a schematic cross-sectional view in which a part in the vicinity of a seal portion in the dust cover according to Embodiment 1 of the present disclosure is enlarged. FIG. **4** is a partially enlarged view of FIG. **1**, and is a schematic cross-sectional view in which the part in the vicinity of the seal portion in the dust cover is enlarged in a state in which the dust cover according to Embodiment 1 of the present disclosure is mounted to the ball joint. FIG. **5** is a schematic cross-sectional view of an auxiliary seal according to Embodiment 1 of the present disclosure. Note that FIG. **5** shows the cross-sectional view obtained by cutting using a plane that includes the central axis in the annular auxiliary seal.

<Ball Joint>

With reference particularly to FIG. **1**, an example of the ball joint to which the dust cover according to the present embodiment can be applied will be described. The ball joint includes a ball stud **300** that has a spherical portion **320** at one end of a shaft portion **310**, a socket **200** that rotatably and swingably supports the ball stud **300**, and a knuckle **400** as an annular member that is fixed to an opposite side of the shaft portion **310** to the spherical portion **320**. Note that the knuckle **400** corresponds to a coupling member that couples to the shaft portion **310** on the opposite side of the shaft portion **310** to the spherical portion **320**. The socket **200** includes an annular case **210**, a bottom plate **220** that is fixed

to the bottom side of the case **210**, and a bearing **230** of the spherical portion **320**. The bearing **230** has a bearing surface **231** that is constituted by a spherical surface having the same radius as the curvature radius of the spherical portion **320**. The knuckle **400** is provided in a vehicle body or the like, and the shaft portion **310** of the ball stud **300** is fixed to the knuckle **400** with a nut **500**. Note that a male thread is formed at the tip of the shaft portion **310**.

A dust cover **100** is used in order to prevent entry of water, dust, etc. into a joint portion and prevent an outflow of grease from the joint portion.

<Dust Cover>

The overall configuration of the dust cover **100** will be described with reference particularly to FIG. **2**. The dust cover **100** is constituted by a seal main body made of an elastic body such as rubber (e.g., chloroprene rubber) and an annular auxiliary seal **150** made of resin. It is possible to obtain the dust cover **100** by, e.g., after the auxiliary seal **150** made of resin is molded, applying an adhesive to the auxiliary seal **150**, setting the auxiliary seal **150** in a mold, injecting a rubber material into the mold, and molding the seal main body by vulcanization. In addition, the auxiliary seal **150** according to the present embodiment is constituted by a solid lubricant in order to reduce sliding resistance. Further, the auxiliary seal **150** according to the present embodiment is constituted by a material excellent in low temperature resistance, and is constituted by a material that is at least higher in low temperature resistance than the rubber material of the seal main body. Specific examples of the material of the auxiliary seal **150** include PTFE, nylon, and polyamide each of which the low temperature resistance is increased by using a filler or the like.

The seal main body integrally has an annular film-like body portion **110** that is deformable, a fixed portion **130** that is provided on one end side of the body portion **110** and is fixed to the socket **200**, and a seal portion **120** that is provided on the other end side of the body portion **110**. An annular concave portion **131** is provided in the fixed portion **130**. A clamp **600** is fitted in the annular concave portion **131**, and the fixed portion **130** is thereby fixed to the case **210** of the socket **200**. The auxiliary seal **150** is provided in the seal portion **120**. In the thus configured dust cover **100**, when the ball stud **300** swings with respect to the socket **200**, the body portion **110** deforms (see FIG. **1**). In addition, when the ball stud **300** rotates with respect to the socket **200**, the seal portion **120** slides on the shaft portion **310** of the ball stud **300** and the knuckle **400**. With this, even when the ball stud **300** swings or rotates with respect to the socket **200**, a sealing function is exerted by the dust cover **100**.

<Seal Portion and Auxiliary Seal>

The seal portion **120** and the auxiliary seal **150** according to the present embodiment will be described in greater detail with reference particularly to FIGS. **3** to **5**. The seal portion **120** includes an inner peripheral seal portion (a first inner peripheral seal portion **121***a* and a second inner peripheral seal portion **121***b*) that is slidable on an outer peripheral surface of the shaft portion **310** of the ball stud **300**, and a dust seal portion (a dust lip **122**) that is slidable on an end surface of the knuckle **400**. Each of the first inner peripheral seal portion **121***a* and the second inner peripheral seal portion **121***b* is constituted by an annular convex portion that protrudes radially inwardly. Note that two inner peripheral seal portions are provided in the present embodiment, but the number of the inner peripheral seal portions to be provided may also be one, or three or more. The dust lip **122** is constituted by an inclined part that is inclined radially outwardly toward the end surface of the knuckle **400**.

The auxiliary seal **150** includes an auxiliary inner peripheral seal portion **151** that is slidable on the outer peripheral surface of the shaft portion **310** of the ball stud **300**. The auxiliary inner peripheral seal portion **151** is constituted by an annular convex portion that protrudes radially inwardly. The amount of the radially inward protrusion of the auxiliary inner peripheral seal portion **151** is smaller than the amount of the radially inward protrusion of each of the first inner peripheral seal portion **121***a* and the second inner peripheral seal portion **121***b* (see FIG. **3**). With this, the sealing function by the first inner peripheral seal portion **121***a* and the second inner peripheral seal portion **121***b* is not prevented. In addition, the auxiliary seal **150** includes an auxiliary dust seal portion (a first auxiliary dust seal portion **152***a* and a second auxiliary dust seal portion **152***b*) that is slidable on the end surface of the knuckle **400**. The first auxiliary dust seal portion **152***a* is constituted by a lip that is inclined radially outwardly toward the end surface of the knuckle **400**. The second auxiliary dust seal portion **152***b* is constituted by an annular convex portion that protrudes toward the end surface of the knuckle **400**. The amount of the protrusion of the auxiliary dust seal portion toward the knuckle **400** is smaller than the amount of the protrusion of the dust lip **122** toward the knuckle **400** (see FIG. **3**). With this, the sealing function by the dust lip **122** is not prevented.

Further, the auxiliary seal **150** includes a supported portion **153** that is supported by a collar **330** as a fixed member fixed to the shaft portion **310** of the ball stud **300** on an opposite side to the auxiliary dust seal portion in an axial direction. In the auxiliary seal **150**, a plurality of slits **153***a* are formed on the opposite side to the auxiliary dust seal portion in the axial direction. A tip surface of a part that is not provided with the slit **153***a* serves as the supported portion **153**. A part that is provided with the inner peripheral seal portion and a part that is provided with the dust seal portion in the seal portion **120** are connected to each other via the slits **153***a*.

Herein, as described above, the collar **330** is fixed to the shaft portion **310** of the ball stud **300**. In a state in which the seal portion **120** of the dust cover **100** is mounted to the ball stud **300**, the supported portion **153** in the auxiliary seal **150** comes into intimate contact with the collar **330** and the auxiliary seal **150** is supported by the collar **330** (see FIG. **4**). Note that the collar **330** is constituted by a material having high rigidity such as metal or resin. In addition, the present embodiment has described the configuration in the case where the collar **330** as a member separate from the shaft portion **310** is fixed to the shaft portion **310**, but it is also possible to adopt a configuration in which a portion corresponding to the collar **330** is provided integrally with the shaft portion **310**.

In addition, in the seal portion **120**, a part on the side of the inner peripheral surface of the auxiliary seal **150** is compressed by the inner peripheral surface of the auxiliary seal **150** and the outer peripheral surface of the shaft portion **310** of the ball stud **300**. With this, the first inner peripheral seal portion **121***a* and the second inner peripheral seal portion **121***b* are pressed radially inwardly by the inner peripheral surface of the auxiliary seal **150**.

<Advantages of the Dust Cover According to the Present Embodiment>

According to the dust cover **100** according to the present embodiment, since the auxiliary seal **150** made of resin is provided, even when the sealing function of the seal portion **120** in the seal main body made of an elastic body is not

adequately exerted in a low temperature environment or the like, sealing performance is maintained by the auxiliary seal **150**.

In addition, in the auxiliary seal **150**, the inner peripheral surface side and both end sides in the axial direction are supported. That is, on the inner peripheral surface side of the auxiliary seal **150**, the auxiliary inner peripheral seal portion **151** is slidably in contact with the shaft portion **310** in the ball stud **300**, and hence the inner peripheral surface side of the auxiliary seal **150** is supported by the shaft portion **310**. Further, on one end side in the axial direction in the auxiliary seal **150**, the auxiliary dust seal portion (the first auxiliary dust seal portion **152***a* and the second auxiliary dust seal portion **152***b*) is slidably in contact with the end surface of the knuckle **400** fixed to the shaft portion **310**, and hence one end side of the auxiliary seal **150** is supported by the knuckle **400**. Furthermore, on the other end side in the axial direction in the auxiliary seal **150**, the supported portion **153** is supported by the collar **330** fixed to the shaft portion **310**. Consequently, the attitude of the auxiliary seal **150** with respect to the ball stud **300** and the knuckle **400** is stably maintained irrespective of the attitude of the ball stud **300** with respect to the socket **200**. With this, the sealing performance by the auxiliary seal **150** is stably exerted irrespective of the attitude of the ball stud **300** with respect to the socket **200**.

In addition, the attitude of the auxiliary seal **150** with respect to the ball stud **300** and the knuckle **400** is stably maintained, whereby the attitude of the seal portion **120** in the seal main body with respect to the ball stud **300** and the knuckle **400** is also stably maintained. With this, the sealing performance by the seal portion **120** is also stably exerted irrespective of the attitude of the ball stud **300** with respect to the socket **200**.

In the present embodiment, by providing the auxiliary seal **150**, the attitude of the seal portion **120** is stably maintained, and hence it is not necessary to increase the pressing force of the inner peripheral seal portion in the seal portion **120** to the shaft portion **310**. With this, an increase in the sliding resistance of the inner peripheral seal portion to the shaft portion **310** is avoided. Further, in the present embodiment, since the auxiliary seal **150** is constituted by the solid lubricant, it is possible to further reduce the sliding resistance.

In addition, the part that is provided with the inner peripheral seal portion and the part that is provided with the dust seal portion in the seal portion **120** are connected to each other via the plurality of slits **153***a* formed in the auxiliary seal **150**. With this, it is possible to provide the auxiliary seal **150** made of resin that includes the auxiliary inner peripheral seal portion and the auxiliary dust seal portion in the seal portion **120** made of an elastic body that includes the inner peripheral seal portion and the dust seal portion.

Further, in the present embodiment, the resin material used for the auxiliary seal **150** is higher in low temperature resistance than the rubber material used for the seal main body. With this, even when the sealing performance of the seal portion **120** in the seal main body is reduced in the low temperature environment, the sealing performance of the auxiliary seal **150** is maintained.

(Others)

The embodiment described above has described the case where the dust lip **122** and the auxiliary dust seal portion (the first auxiliary dust seal portion **152***a* and the second auxiliary dust seal portion **152***b*) slide on the knuckle **400**. However, the present disclosure includes the case where the dust lip and the auxiliary dust seal portion slide on another member provided on the end surface side of the knuckle. For example, as in a technique disclosed in Japanese Patent Application Laid-open No. H11-63245, in a configuration in which a ferrule that abuts on the knuckle is provided, the present disclosure can also be applied to the case where the dust lip and the auxiliary dust seal portion slide on the ferrule.

In addition, the embodiment described above has described the case where the inner peripheral seal portion (the first inner peripheral seal portion **121***a* and the second inner peripheral seal portion **121***b*) and the auxiliary inner peripheral seal portion **151** slide on the outer peripheral surface of the shaft portion **310** of the ball stud **300**. However, the present disclosure can also be applied to the case where the inner peripheral seal portion and the auxiliary inner peripheral seal portion are configured so as to be slidable on the outer peripheral surface of another member provided on the outer peripheral surface side of the shaft portion **310** of the ball stud **300**. For example, as in the technique disclosed in Japanese Patent Application Laid-open No. H11-63245 mentioned above, in the configuration in which the ferrule is provided, the present disclosure can also be applied to the case where the inner peripheral seal portion and the auxiliary inner peripheral seal portion slide on the ferrule. In addition, as in a technique disclosed in Japanese Utility Model Application Laid-open No. H3-32211, in a configuration in which a retaining member (retainer) having a flange is provided, the present disclosure can also be applied to the case where the inner peripheral seal portion and the auxiliary inner peripheral seal portion slide on the retainer.

Further, the present embodiment has described the configuration in the case where the supported portion **153** in the auxiliary seal **150** is supported by the collar **330** fixed to the shaft portion **310** of the ball stud **300**. However, in the present disclosure, the member that supports the supported portion **153** is not limited to the collar **330**. For example, as in the technique disclosed in Japanese Utility Model Application Laid-open No. H3-32211 mentioned above, in the configuration in which the retainer is provided, the present disclosure can also be applied to the case where the supported portion is supported by the flange in the retainer. In addition, as in the technique disclosed in Japanese Patent Application Laid-open No. H11-63245 mentioned above, in the configuration in which the ferrule is provided, the present disclosure can also be applied to the case where a flange is provided in the ferrule and the supported portion is supported by the flange.

Embodiment 2

With reference to FIGS. **6** to **10**, a dust cover according to Embodiment 2 of the present disclosure will be described. FIG. **6** is a schematic cross-sectional view of a ball joint and the dust cover mounted to the ball joint according to Embodiment 2 of the present disclosure. Note that FIG. **6** shows the cross-sectional view obtained by cutting using a plane that includes the central axis of a shaft portion of a ball stud provided in the ball joint. FIG. **7** is a schematic cross-sectional view of the dust cover according to Embodiment 2 of the present disclosure. Note that FIG. **7** shows the cross-sectional view obtained by cutting using a plane that includes the central axis of the annular dust cover in a state in which the dust cover is not deformed. FIG. **8** is a partially enlarged view of FIG. **7**, and is a schematic cross-sectional view in which a part in the vicinity of a seal portion in the

dust cover according to Embodiment 2 of the present disclosure is enlarged. FIG. **9** is a partially enlarged view of FIG. **6**, and is a schematic cross-sectional view in which the part in the vicinity of the seal portion in the dust cover is enlarged in a state in which the dust cover according to Embodiment 2 of the present disclosure is mounted to the ball joint. FIG. **10** is a schematic cross-sectional view of a reinforcing ring according to Embodiment 2 of the present disclosure. Note that FIG. **10** shows the cross-sectional view obtained by cutting using a plane that includes the central axis in the reinforcing ring.

<Ball Joint>

An example of the ball joint to which the dust cover according to the present embodiment can be applied will be described with reference particularly to FIG. **6**. The ball joint includes the ball stud **300** that has the spherical portion **320** at one end of the shaft portion **310**, the socket **200** that rotatably and swingably supports the ball stud **300**, and the knuckle **400** as the annular member that is fixed to the opposite side of the shaft portion **310** to the spherical portion **320**. Note that the knuckle **400** corresponds to the coupling member that couples to the shaft portion **310** on the opposite side of the shaft portion **310** to the spherical portion **320**. The socket **200** includes the annular case **210**, the bottom plate **220** that is fixed to the bottom side of the case **210**, and the bearing **230** of the spherical portion **320**. The bearing **230** has the bearing surface **231** that is constituted by the spherical surface having the same radius as the curvature radius of the spherical portion **320**. The knuckle **400** is provided in the vehicle body or the like, and the shaft portion **310** of the ball stud **300** is fixed to the knuckle **400** with the nut **500**. Note that the male thread is formed at the tip of the shaft portion **310**.

A dust cover **100**X is used in order to prevent the entry of water, dust, etc. into the joint portion and prevent the outflow of grease from the joint portion. In addition, in the present embodiment, a retainer **160** that is constituted by a material having high rigidity such as metal or resin is fixed to a part of the shaft portion **310** to which a seal portion **120**X of the dust cover **100**X is mounted. The retainer **160** includes a cylindrical portion **161** that is fitted on the shaft portion **310** and an outward flange portion **162** that is provided on one end side of the cylindrical portion **161** (see FIG. **9**).

<Dust Cover>

The overall configuration of the dust cover **100**X will be described with reference particularly to FIG. **7**. The dust cover **100**X is constituted by a seal main body made of an elastic material such as rubber (e.g., chloroprene rubber) and a reinforcing ring **150**X made of resin such as PTFE, nylon, or polyamide. In the present embodiment, it is possible to obtain the dust cover **100**X by, after the reinforcing ring **150**X made of resin is molded, applying an adhesive to the reinforcing ring **150**X, setting the reinforcing ring **150**X in a mold, injecting a rubber material into the mold, and molding the seal main body by vulcanization.

The seal main body integrally has the annular film-like body portion **110** that is deformable, the fixed portion **130** that is provided on one end side of the body portion **110** and is fixed to the socket **200**, and the seal portion **120**X that is provided on the other end side of the body portion **110**. The annular concave portion **131** is provided in the fixed portion **130**. The clamp **600** is fitted in the annular concave portion **131**, and the fixed portion **130** is thereby fixed to the case **210** of the socket **200**. The reinforcing ring **150**X is provided in the seal portion **120**X. In the thus configured dust cover **100**X, when the ball stud **300** swings with respect to the socket **200**, the body portion **110** deforms (see FIG. **6**). In addition, when the ball stud **300** rotates with respect to the socket **200**, the seal portion **120**X slides on the shaft portion **310** of the ball stud **300** and the knuckle **400**. With this, even when the ball stud **300** swings or rotates with respect to the socket **200**, the sealing function is exerted by the dust cover **100**X. Note that, in the present embodiment, the retainer **160** is fixed to the shaft portion **310**, and hence the seal portion **120**X slides on the cylindrical portion **161** of the retainer **160** instead of sliding directly on the shaft portion **310**.

<Seal Portion and Reinforcing Ring>

The seal portion **120**X and the reinforcing ring **150**X according to the present embodiment will be described in greater detail with reference particularly to FIGS. **8** to **10**. The seal portion **120**X includes an inner peripheral seal portion that is slidable on an outer peripheral surface of the cylindrical portion **161** of the retainer **160** fixed to the shaft portion **310** of the ball stud **300**, and a dust seal portion that is slidable on the end surface of the knuckle **400**.

The inner peripheral seal portion according to the present embodiment includes a first inner peripheral convex portion **121**Xa, a second inner peripheral convex portion **121**Xb, and a third inner peripheral convex portion **121**Xc arranged in this order from the other end side to one end side. Each of the first inner peripheral convex portion **121**Xa, the second inner peripheral convex portion **121**Xb, and the third inner peripheral convex portion **121**Xc is constituted by an annular convex portion that protrudes radially inwardly. Herein, the first inner peripheral convex portion **121**Xa exerts the function of preventing tilting of the seal portion **120**X when a pulling force is applied to the seal portion **120**X from the body portion **110** due to tilting of the ball stud **300**. Note that three inner peripheral convex portions are provided in the present embodiment, but the number of the inner peripheral convex portions to be provided may also be only two, or four or more. The inner diameter of the radially inward foremost end portion of the first inner peripheral convex portion **121**Xa is designed so as to be larger than the inner diameter of the radially inward foremost end portion of the second inner peripheral convex portion **121**Xb. Note that the inner diameter of the radially inward foremost end portion of the second inner peripheral convex portion **121**Xb and the inner diameter of the radially inward foremost end portion of the third inner peripheral convex portion **121**Xc are designed so as to be equal to each other.

The dust seal portion according to the present embodiment includes a dust lip **122**Xa that is provided radially outwardly, and an annular convex portion **122**Xb that is provided radially inwardly. The dust lip **122**Xa is configured so as to extend radially outwardly toward the surface side of the knuckle **400**. Herein, T represents the width of the base of the dust lip **122**Xa, and L represents the length thereof, the dust lip **122**Xa is designed so as to satisfy $0.45 \leq T \div L \leq 0.6$. Note that the width T of the base is defined by using the radial width of the base part of the dust lip **122**Xa. In addition, the length L is defined by using a distance from the radially inward position of the base of the dust lip **122**Xa to the foremost end position of the dust lip **122**Xa.

The reinforcing ring **150**X includes a tubular portion **151**X and an inward flange portion **152**X that is provided on the other end side of the tubular portion **151**X. The inner peripheral surface of the tubular portion **151**X is constituted by a cylindrical surface. In addition, one end side of the tubular portion **151**X serves as a supported portion **153**X that is supported by the outward flange portion **162** of the retainer **160** serving as a fixed member fixed to the shaft portion **310** of the ball stud **300**. Further, a plurality of slits **153**Xa are formed on one end side of the tubular portion

151X in the reinforcing ring 150X. The tip surface of a part that is not provided with the slit 153Xa serves as the supported portion 153X. A part that is provided with the inner peripheral seal portion in the seal portion 120X and a part that is provided with the body portion 110 are connected to each other via the slits 153Xa. The reinforcing ring 150X is buried in the seal portion 120X, only the supported portion 153X (the end surface of the tubular portion 151X on one end side) is exposed, and the other part is buried in the seal portion 120X. Note that an outer peripheral end edge of a part that connects the tubular portion 151X and the inward flange portion 152X is constituted by a small chamfer portion (R surface) 154X such that the deformation of the dust lip 122Xa is facilitated.

Herein, as described above, the retainer 160 is fixed to the shaft portion 310 of the ball stud 300. In a state in which the seal portion 120X of the dust cover 100X is mounted to the ball stud 300, the supported portion 153X in the reinforcing ring 150X comes into intimate contact with the outward flange portion 162 of the retainer 160, and the reinforcing ring 150X is supported by the outward flange portion 162 (see FIG. 9).

The present embodiment has described the configuration in the case where the retainer 160 is fixed to the shaft portion 310, and it is also possible to adopt a configuration in which a collar (a member obtained by forming a hole in the center of a disk-like member) is fixed to the shaft portion 310. In this case, the supported portion 153X in the reinforcing ring 150X comes into intimate contact with the collar, and the reinforcing ring 150X is supported by the collar. In addition, the inner peripheral seal portion (the first inner peripheral convex portion 121Xa, the second inner peripheral convex portion 121Xb, and the third inner peripheral convex portion 121Xc) slides directly on the shaft portion 310 of the ball stud 300. Further, it is also possible to adopt a configuration in which a portion corresponding to the outward flange portion 162 or the collar is provided integrally with the shaft portion 310 instead of fixing the retainer 160 or the collar as a member separate from the shaft portion 310 to the shaft portion 310. In this case, the supported portion 153X in the reinforcing ring 150X comes into intimate contact with the portion corresponding to the outward flange portion 162 or the collar, and the reinforcing ring 150X is supported by the portion. The inner peripheral seal portion slides directly on the shaft portion 310 of the ball stud 300.

In the seal portion 120X, a part on the side of the inner peripheral surface of the reinforcing ring 150X is compressed by the inner peripheral surface of the reinforcing ring 150X and the outer peripheral surface of the cylindrical portion 161 of the retainer 160. With this, the first inner peripheral convex portion 121Xa, the second inner peripheral convex portion 121Xb, and the third inner peripheral convex portion 121Xc are pressed radially inwardly by the inner peripheral surface of the reinforcing ring 150X.

In the present embodiment, the tip of the inward flange portion 152X in the reinforcing ring 150X is provided so as to be positioned between the radially inward foremost end portion of the first inner peripheral convex portion 121Xa and the radially inward foremost end portion of the second inner peripheral convex portion 121Xb in the seal portion 120X in the axial direction. In addition, the radial dimensions of the seal portion 120X and the reinforcing ring 150X are set in the following manner. That is, as shown in FIG. 8, Do represents the outer diameter of a part of the shaft portion 310 on which the second inner peripheral convex portion 121Xb slides. Note that, in the present embodiment, the second inner peripheral convex portion 121Xb slides on the cylindrical portion 161 of the retainer 160 instead of sliding directly on the shaft portion 310, and hence the outer diameter Do corresponds to the outer diameter of the cylindrical portion 161. In addition, Dg represents the inner diameter of the tip of the inward flange portion 152X of the reinforcing ring 150X. Further, Ds represents the inner diameter of the radially inward foremost end portion of the second inner peripheral convex portion 121Xb. At this point, in the present embodiment, they are designed so as to satisfy Ci (=(Do−Ds)÷2)<Cm (=(Dg−Do)÷2). Note that Ci corresponds to the interference of the second inner peripheral convex portion 121Xb, and Cm corresponds to a gap between the reinforcing ring 150X and the cylindrical portion 161 of the retainer 160.

<Advantages of the Dust Cover According to the Present Embodiment≤

According to the dust cover 100X according to the present embodiment, in the reinforcing ring 150X provided in the seal portion 120X, the supported portion 153X that is supported by the outward flange portion 162 of the retainer 160 fixed to the shaft portion 310 is provided. Consequently, it is possible to stably maintain the attitude of the seal portion 120X with respect to the ball stud 300 and the knuckle 400 irrespective of the attitude of the ball stud 300 with respect to the socket 200. With this, the sealing performance by the seal portion 120X is stably exerted irrespective of the attitude of the ball stud 300 with respect to the socket 200.

In addition, the tip of the inward flange portion 152X in the reinforcing ring 150X is provided so as to be positioned between the radially inward foremost end portion of the first inner peripheral convex portion 121Xa and the radially inward foremost end portion of the second inner peripheral convex portion 121Xb in the seal portion 120X in the axial direction. With this, it is possible to prevent the pressing force to the shaft portion 310 (the cylindrical portion 161 of the retainer 160) by the first inner peripheral convex portion 121Xa and the second inner peripheral convex portion 121Xb from becoming excessively large. Consequently, it is possible to prevent the sliding resistance between the first and second inner peripheral convex portions 121Xa and 121Xb and the shaft portion 310 (the cylindrical portion 161 of the retainer 160) from becoming excessively large while exerting the sealing performance by the first inner peripheral convex portion 121Xa and the second inner peripheral convex portion 121Xb.

In addition, as described above, the dust cover 100X according to the present embodiment is designed so as to satisfy Ci<Cm. That is, the dust cover 100X is designed such that the gap between the reinforcing ring 150X and the cylindrical portion 161 of the retainer 160 is larger than the interference of the second inner peripheral convex portion 121Xb.

With this, it becomes possible to increase the thickness of a part of the seal main body that covers the tip of the inward flange portion 152X to a certain degree while preventing the sliding resistance by the second inner peripheral convex portion 121Xb from becoming excessively large. With this, it is possible to prevent a reduction in moldability when the seal main body is molded. That is, in general, in the case where injection molding is performed by using a rubber material, when a thin part is present, the fluidity of the rubber material when the rubber material injected into a mold passes through the thin part is poor, and molding failure tends to occur. In addition, when Ci>Cm is set after the value of Cm is set to such a degree that the occurrence of the molding failure is prevented, the interference of the

second inner peripheral convex portion **121**Xb becomes excessively large, and the sliding resistance is increased. When the sliding resistance becomes excessively large, the body portion **110** deforms abnormally and may be damaged due to occurrence of buckling or the like. To cope with this, in the present embodiment, by designing the dust cover **100**X such that Ci<Cm is satisfied, the sliding resistance by the second inner peripheral convex portion **121**Xb is prevented from becoming excessively large while the molding failure is prevented.

Further, in the present embodiment, T represents the width of the base of the dust lip **122**Xa, L represents the length thereof, and the dust lip **122**Xa is designed so as to satisfy $0.45 \leq T \div L \leq 0.6$. With this, it is possible to stabilize the sealing performance by the dust lip **122**Xa for a long time period. That is, it is known that, in general, in the case of rubber, when deformed rubber is continuously heated, the resilience of the rubber is lost and the rubber is permanently deformed. A permanent deformation amount of the rubber is increased as an initial deformation amount of the rubber (in the case of the present embodiment, the initial deformation amount corresponds to an initial compression amount of the dust lip **122**Xa) is increased. In the case where T÷L is set to be smaller than 0.45, the initial compression amount of the dust lip **122**Xa is small, and the initial sealing performance becomes insufficient. In the case where T÷L is set to be larger than 0.6, the permanent deformation amount in the case where the rubber is continuously heated is increased, and a reduction amount of the sealing performance is increased. To cope with this, the dust lip **122**Xa according to the present embodiment is designed so as to satisfy $0.45 \leq T \div L \leq 0.6$. With this, it is possible to maintain the stable sealing performance even when the permanent deformation occurs while adequately satisfying the initial sealing performance.

Embodiment 3

FIGS. **11** to **13** show Embodiment 3 of the present disclosure. Embodiment 2 described above has described the configuration in the case where the reinforcing ring is made of resin, and the present embodiment describes a configuration in the case where the reinforcing ring is made of metal. The configurations and operations other than the reinforcing ring are the same as those in Embodiment 2, and hence the same components as those in Embodiment 2 are designated by the same reference numerals as those in Embodiment 2 and the description thereof will be omitted.

The configuration of the ball joint and the overall configuration of the dust cover are as described in Embodiment 2 described above, and hence the description thereof will be omitted. Hereinbelow, with reference to FIGS. **11** to **13**, the seal portion **120**X and a reinforcing ring **155**X according to the present embodiment will be described. FIG. **11** is a schematic cross-sectional view in which a part in the vicinity of a seal portion in a dust cover according to Embodiment 3 of the present disclosure is enlarged. FIG. **12** is a schematic cross-sectional view in which the part in the vicinity of the seal portion in the dust cover is enlarged in a state in which the dust cover according to Embodiment 3 of the present disclosure is mounted to a ball joint. FIG. **13** is a schematic cross-sectional view of a reinforcing ring according to Embodiment 3 of the present disclosure. Note that FIG. **13** shows the cross-sectional view obtained by cutting using a plane that includes the central axis in the reinforcing ring.

The configuration of the seal portion **120**X is the same as that in Embodiment 2, and hence the description thereof will be appropriately omitted, and the reinforcing ring **155**X will be described in detail. Similarly to the case of Embodiment 2, the reinforcing ring **155**X according to the present embodiment also includes a tubular portion **156**X and an inward flange portion **157**X that is provided on the other end side of the tubular portion **156**X. The strength of the tubular portion **151**X is increased by increasing the thickness of the other end side in the case of Embodiment 2. In the case of the present embodiment, the reinforcing ring **155**X is made of metal and the strength thereof is high, and hence the tubular portion **156**X is constituted by a cylindrical portion having a relatively small thickness. Similarly to the case of Embodiment 2 described above, one end side of the tubular portion **156**X serves as a supported portion **158**X that is supported by the outward flange portion **162** of the retainer **160**. Similarly to the case of Embodiment 2 described above, a plurality of slits **158**Xa are formed on one end side of the tubular portion **156**X in the reinforcing ring **155**X. In addition, similarly to the case of Embodiment 2 described above, the tip surface of a part that is not provided with the slit **158**Xa serves as the supported portion **158**X. Further, similarly to the case of Embodiment 2, the reinforcing ring **155**X is buried in the seal portion **120**X, only the supported portion **158**X is exposed, and the other part is buried in the seal portion **120**X.

In addition, the collar may be used instead of the retainer **160**, and the configuration in which the part corresponding to the outward flange portion **162** or the collar is provided integrally with the shaft portion **310** may be adopted, as described in Embodiment 2 described above. Further, similarly to the case of Embodiment 2 described above, the tip of the inward flange portion **157**X in the reinforcing ring **155**X is provided so as to be positioned between the radially inward foremost end portion of the first inner peripheral convex portion **121**Xa and the radially inward foremost end portion of the second inner peripheral convex portion **121**Xb in the seal portion **120**X in the axial direction. Furthermore, as described in Embodiment 2 described above, the radial dimensions of the seal portion **120**X and the reinforcing ring **155**X are designed so as to satisfy Ci (=(Do−Ds)÷2)<Cm (=(Dg−Do)÷2).

It will be easily understood that effects similar to those of the case of Embodiment 2 described above are obtained also in the thus configured dust cover according to the present embodiment.

(Others)

Each of Embodiments 2 and 3 described above has described the case where the dust seal portion (the dust lip **122**Xa and the annular convex portion **122**Xb) slides on the knuckle **400**. However, the present disclosure includes the case where the dust seal portion slides on another member that is provided on the end surface side of the knuckle. For example, as in the technique disclosed in Japanese Patent Application Laid-open No. H11-63245, in the configuration in which the ferrule that abuts on the knuckle is provided, the present disclosure can also be applied to the case where the dust seal portion slides on the ferrule.

REFERENCE SIGNS LIST

100, **100**X: Dust cover
110: Body portion
120, **120**X: Seal portion
121*a*: First inner peripheral seal portion
121*b*: Second inner peripheral seal portion
121 Xa: First inner peripheral convex portion
121 Xb: Second inner peripheral convex portion

121 Xc: Third inner peripheral convex portion
122: Dust lip
122 Xa: Dust lip
122 Xb: Annular convex portion
130: Fixed portion
131: Annular concave portion
150: Auxiliary seal
150X, **155**X: Reinforcing ring
151: Auxiliary inner peripheral seal portion
151X, **156**X: Tubular portion
152*a*: First auxiliary dust seal portion
152*b*: Second auxiliary dust seal portion
152X, **157**X: Inward flange portion
153, **153**X, **158**X: Supported portion
153*a*, **153**Xa, **158**Xa: Slit
160: Retainer
161: Cylindrical portion
162: Outward flange portion
200: Socket
210: Case
220: Bottom plate
230: Bearing
231: Bearing surface
300: Ball stud
310: Shaft portion
320: Spherical portion
330: Collar
400: Knuckle
500: Nut
600: Clamp

The invention claimed is:

1. A dust cover used in a ball joint including:
a ball stud that has a spherical portion at one end of a shaft portion;
a socket that has a bearing which receives the spherical portion and rotatably and swingably supports the ball stud; and
a coupling member that couples to the shaft portion on an opposite end of the shaft portion to the spherical portion,
the dust cover comprising:
a seal main body made of an elastic body and integrally having:
a deformable body portion;
a fixed portion that is provided on one end side of the body portion and is fixed to the socket; and
a seal portion that is provided on another end side of the body portion and is provided so as to be slidable on the shaft portion and the coupling member; and
an annular auxiliary seal made of resin or metal and provided in the seal portion, wherein the seal portion includes:
an inner peripheral seal portion that is slidable on an outer peripheral surface of the shaft portion; and
a dust seal portion that is slidable on an end surface of the coupling member, and the auxiliary seal includes:
an auxiliary inner peripheral seal portion that is slidable on the outer peripheral surface of the shaft portion;
an auxiliary dust seal portion that is slidable on the end surface of the coupling member; and
a supported portion that is supported by a fixed member fixed to the shaft portion on an opposite side to the auxiliary dust seal portion in an axial direction.

2. The dust cover according to claim **1**, wherein a plurality of slits are formed on the opposite side of the auxiliary seal to the auxiliary dust seal portion in the axial direction, and a part that is provided with the inner peripheral seal portion and a part that is provided with the dust seal portion in the seal portion are connected to each other via the slits.

3. The dust cover according to claim **1**, wherein a resin material used for the auxiliary seal is higher in low temperature resistance than a rubber material used for the seal main body.

4. The dust cover according to claim **2**, wherein a resin material used for the auxiliary seal is higher in low temperature resistance than a rubber material used for the seal main body.

5. The dust cover according to claim **1**, wherein the dust seal portion has a dust lip that extends radially outwardly toward a surface side of the coupling member, and the dust lip satisfies $0.45<T+L<0.6$, where T represents a width of a base of the dust lip, and L represents a length of the dust lip.

6. A dust cover used in a ball joint including:
a ball stud that has a spherical portion at one end of a shaft portion;
a socket that has a bearing which receives the spherical portion and rotatably and swingably supports the ball stud; and
a coupling member that couples to the shaft portion on an opposite end of the shaft portion to the spherical portion, the dust cover comprising:
a seal main body made of an elastic body and integrally having:
a deformable body portion;
a fixed portion that is provided on one end side of the body portion and is fixed to the socket, and
a seal portion that is provided on another end side of the body portion and is provided so as to be slidable on the shaft portion and the coupling member; and
a reinforcing ring made of resin or metal and provided in the seal portion, wherein the seal portion includes:
an inner peripheral seal portion that is slidable on an outer peripheral surface of the shaft portion; and
a dust seal portion that is slidable on an end surface of the coupling member, wherein the inner peripheral seal portion has:
a first inner peripheral convex portion that is slidable on the outer peripheral surface of the shaft portion; and
a second inner peripheral convex portion that is provided adjacent to the first inner peripheral convex portion and closer to the one end side than the first inner peripheral convex portion, and is slidable on the outer peripheral surface of the shaft portion, the reinforcing ring includes:
a supported portion that is supported by a fixed member fixed to the shaft portion on the one end side; and
an inward flange portion that is provided on the other end side and is buried in the seal portion, wherein a tip of the inward flange portion is provided so as to be positioned between a radially inward foremost end portion of the first inner peripheral convex portion and a radially inward foremost end portion of the second inner peripheral convex portion in an axial direction.

7. The dust cover according to claim **6**, wherein a difference between an outer diameter of a part of the shaft portion on which the second inner peripheral convex portion slides and an inner diameter of the tip of the inward flange portion is larger than a difference between the outer diameter and an inner diameter of the radially inward foremost end portion of the second inner peripheral convex portion.

8. The dust cover according to claim **6**, wherein the dust seal portion has a dust lip that extends radially outwardly toward a surface side of the coupling member, and the dust

lip satisfies $0.45 \leq T \div L \leq 0.6$, where T represents a width of a base of the dust lip, and L represents a length of the dust lip.

* * * * *