US 20110151667A1

(19) United States

(12) Patent Application Publication

Hwang et al.

(10) Pub. No.: US 2011/0151667 A1

(43) Pub. Date: Jun. 23, 2011

(54) METHODS OF MANUFACTURING THREE-DIMENSIONAL SEMICONDUCTOR DEVICES AND RELATED DEVICES

(76) Inventors: **Sung-Min Hwang**, Seoul (KR); **Hansoo Kim**, Suwon-si (KR); **Wonseok Cho**, Suwon-si (KR); **Jaehoon Jang**, Seongnam-si (KR)

(21) Appl. No.: **12/963,241**

(22) Filed: **Dec. 8, 2010**

(30) **Foreign Application Priority Data**

Dec. 18, 2009 (KR) 10-2009-0126855

Publication Classification

(51) **Int. Cl.**
H01L 21/768 (2006.01)

(52) **U.S. Cl.** **438/667**; 257/E21.585

(57) **ABSTRACT**

A three-dimensional semiconductor device may include a substrate including wiring and contact regions and a thin film structure on the wiring and contact regions of the substrate. The thin-film structure may include a plurality of alternating wiring layers and inter-layer insulating layers defining a terraced structure in the contact region so that each of the wiring layers includes a contact surface in the contact region that extends beyond others of the wiring layers more distant from the substrate. A plurality of contact structures may extend in a direction perpendicular to a surface of the substrate with each of the contact structures being electrically connected to a contact surface of a respective one of the wiring layers. Related methods are also discussed.

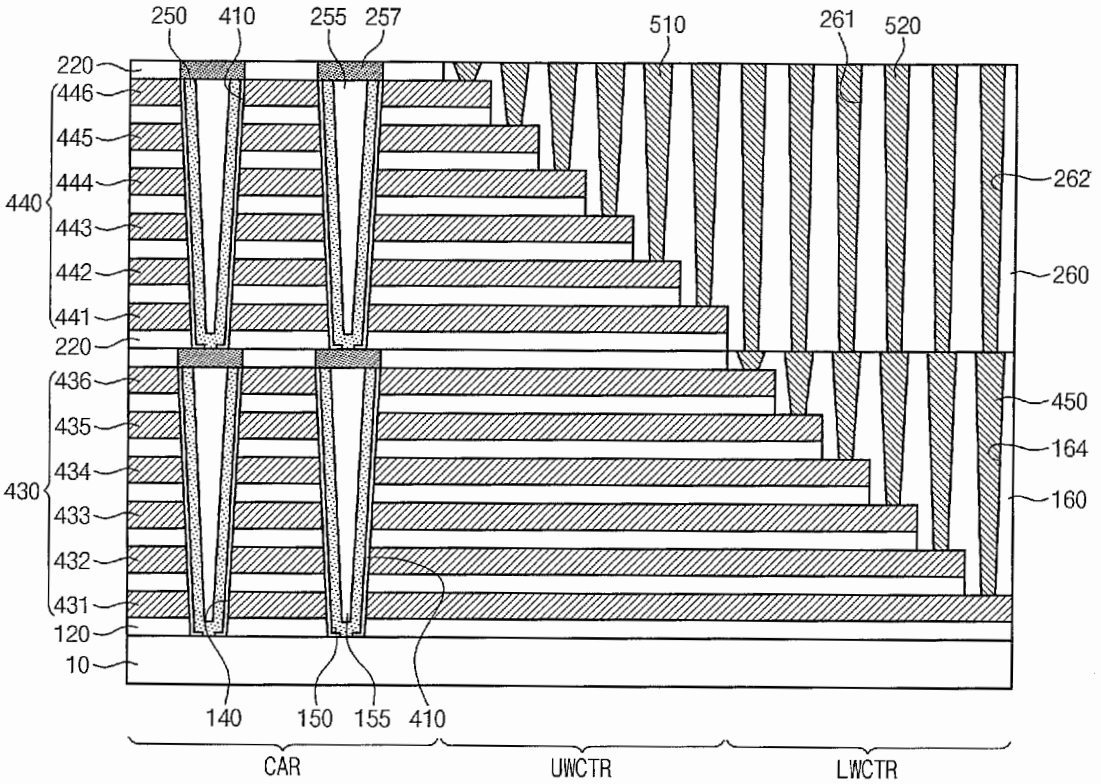

Fig. 1A

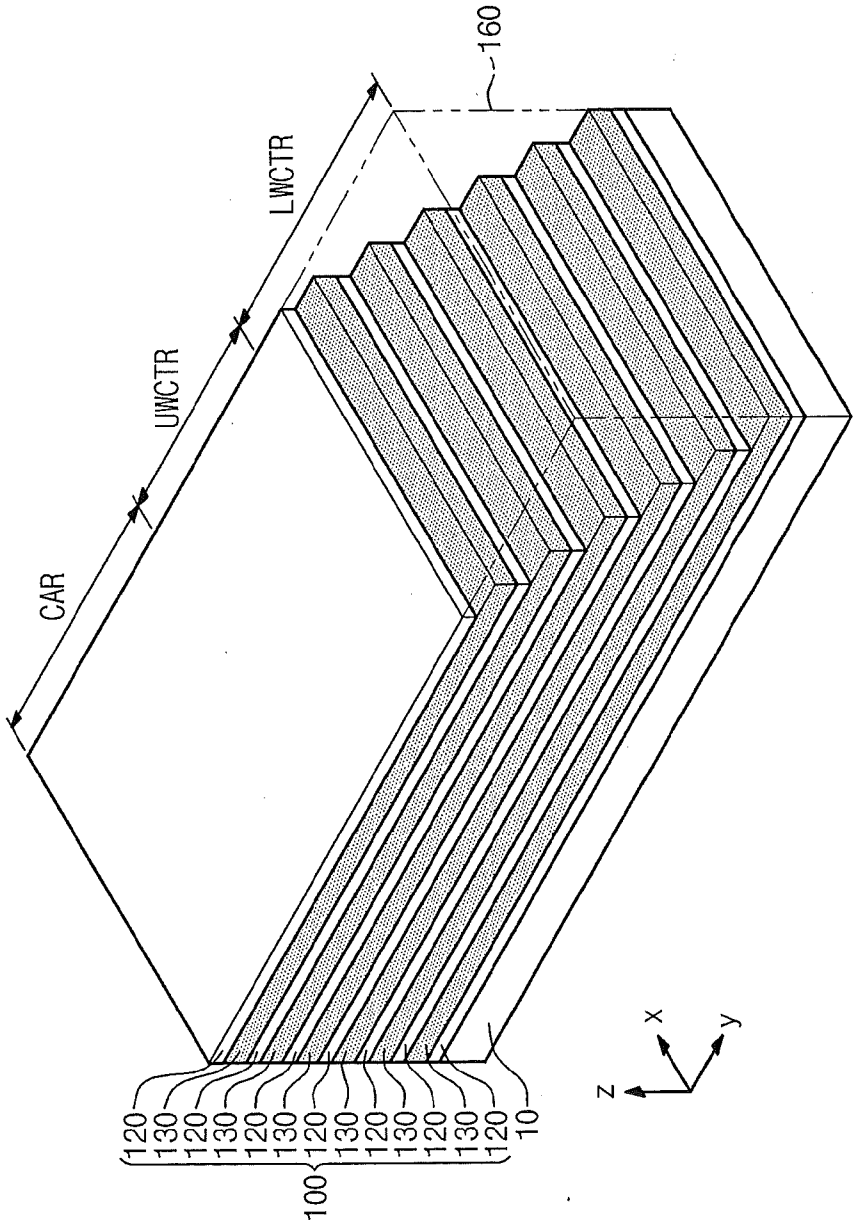
CAR
UWCTR
LWCTR
160
120
130
120
130
120
130
120
130
120
130
120
130
120
100
10
z
x
y

Fig. 1B

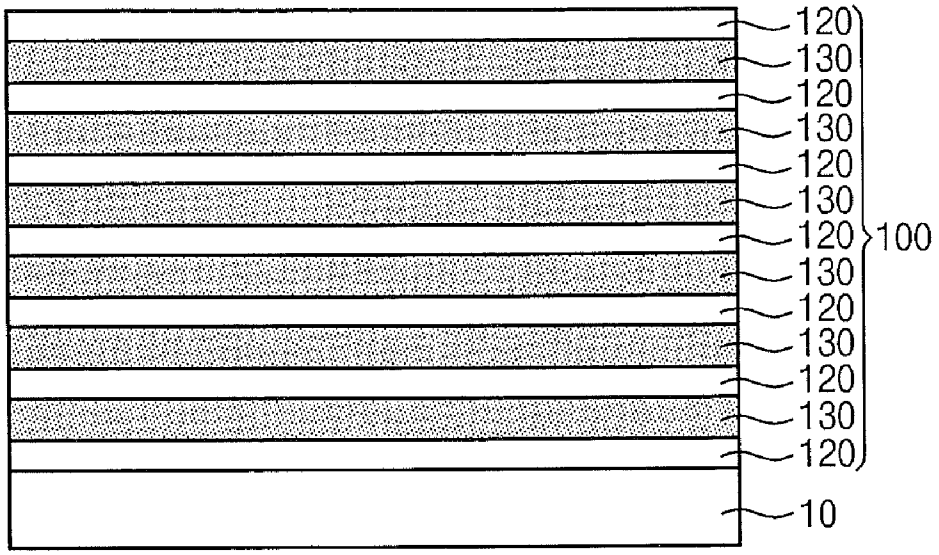
120
130
120
130
120
130
120
130
120
130
120
130
120
130
120
100
10

Fig. 1C

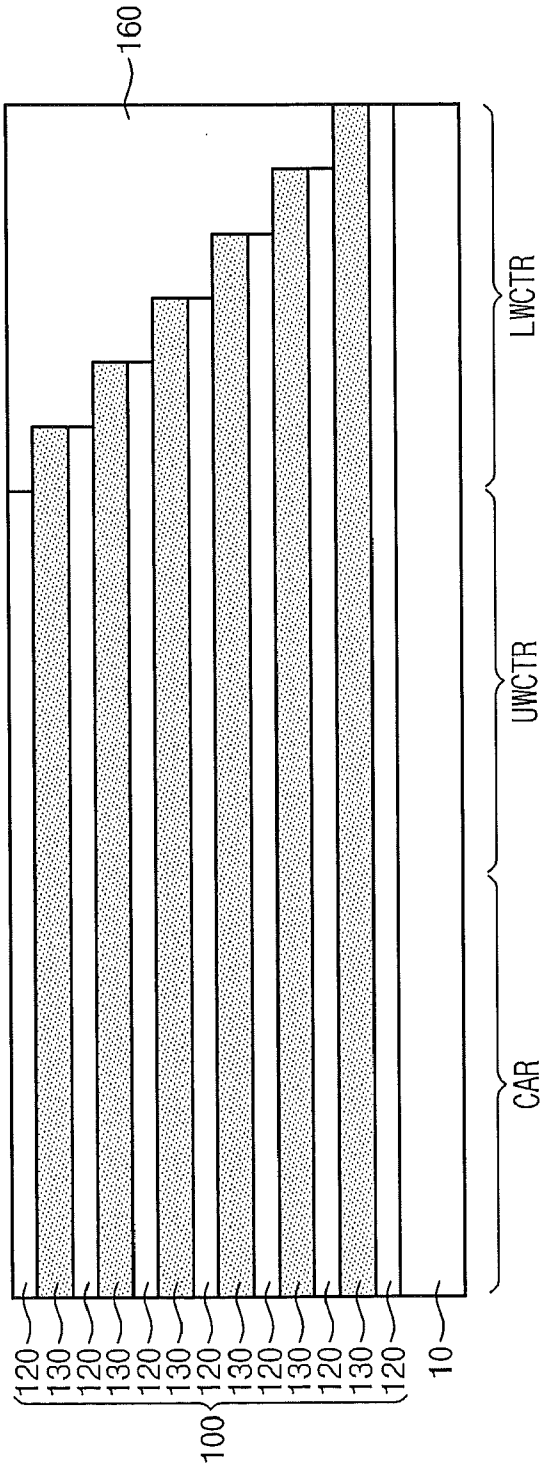
160
LWCTR
UWCTR
CAR
120
130
120
130
120
130
120
130
120
130
120
130
120
100
10

Fig. 2A

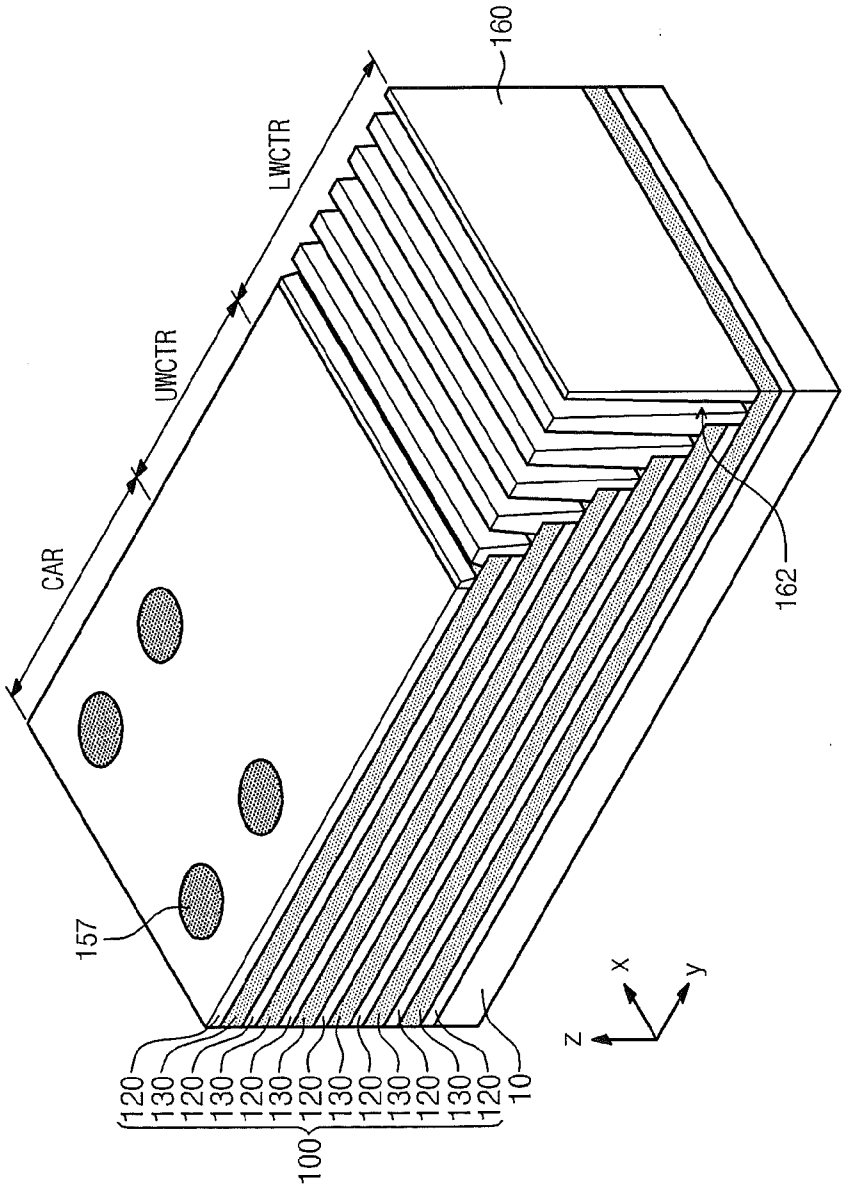
CAR
UWCTR
LWCTR
160
157
162
100
120
130
120
130
120
130
120
130
120
130
120
130
120
10
z
x
y

Fig. 2B

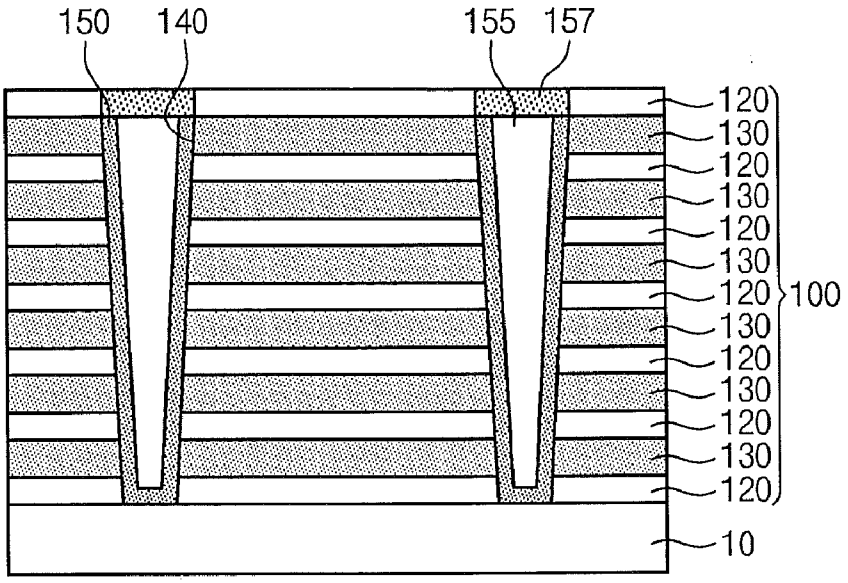
150
140
155
157
120
130
120
130
120
130
120
130
120
130
120
130
120
130
120
100
10

Fig. 2C

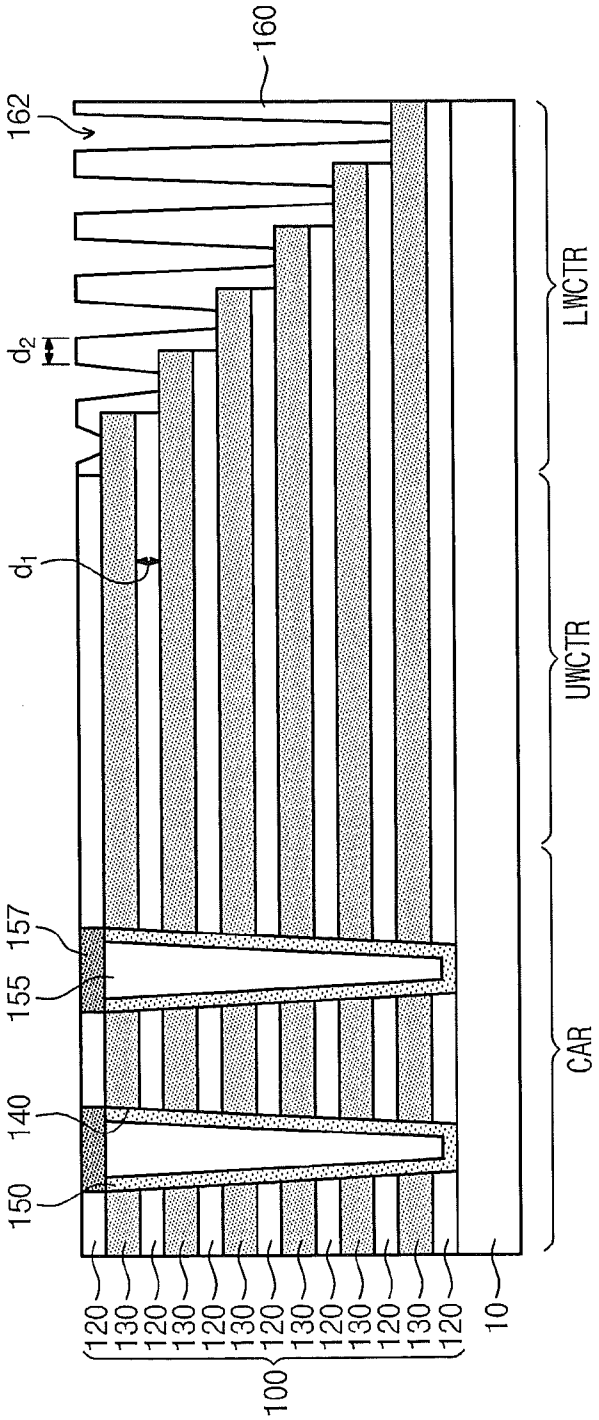
160
162
d_2
d_1
157
155
140
150
120
130
120
130
120
130
120
130
120
130
120
130
120
130
120
100
10
LWCTR
UWCTR
CAR

Fig. 3A

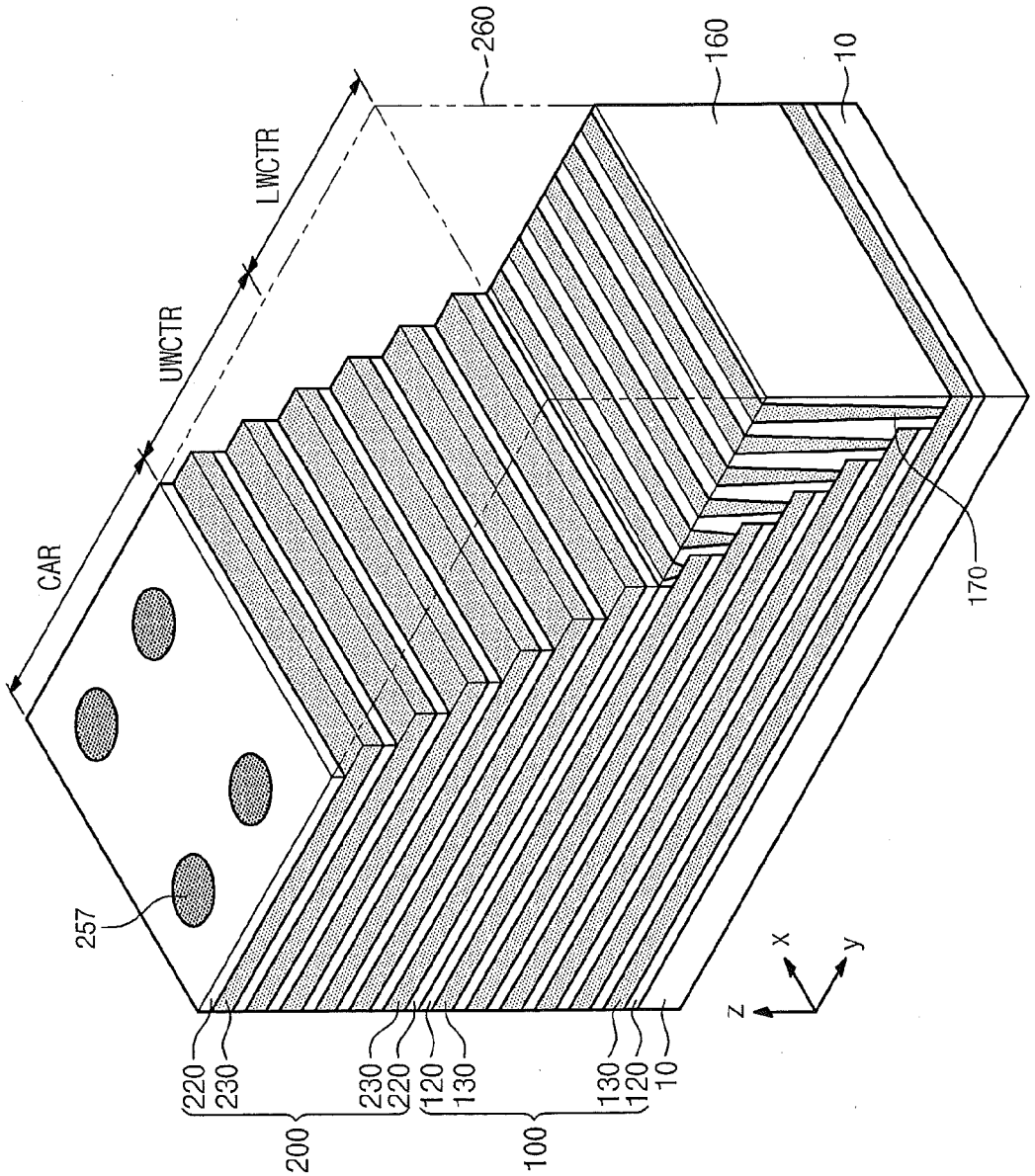
CAR
UWCTR
LWCTR
260
160
10
170
257
220
230
200
230
220
120
130
100
130
120
10
z
x
y

Fig. 3B

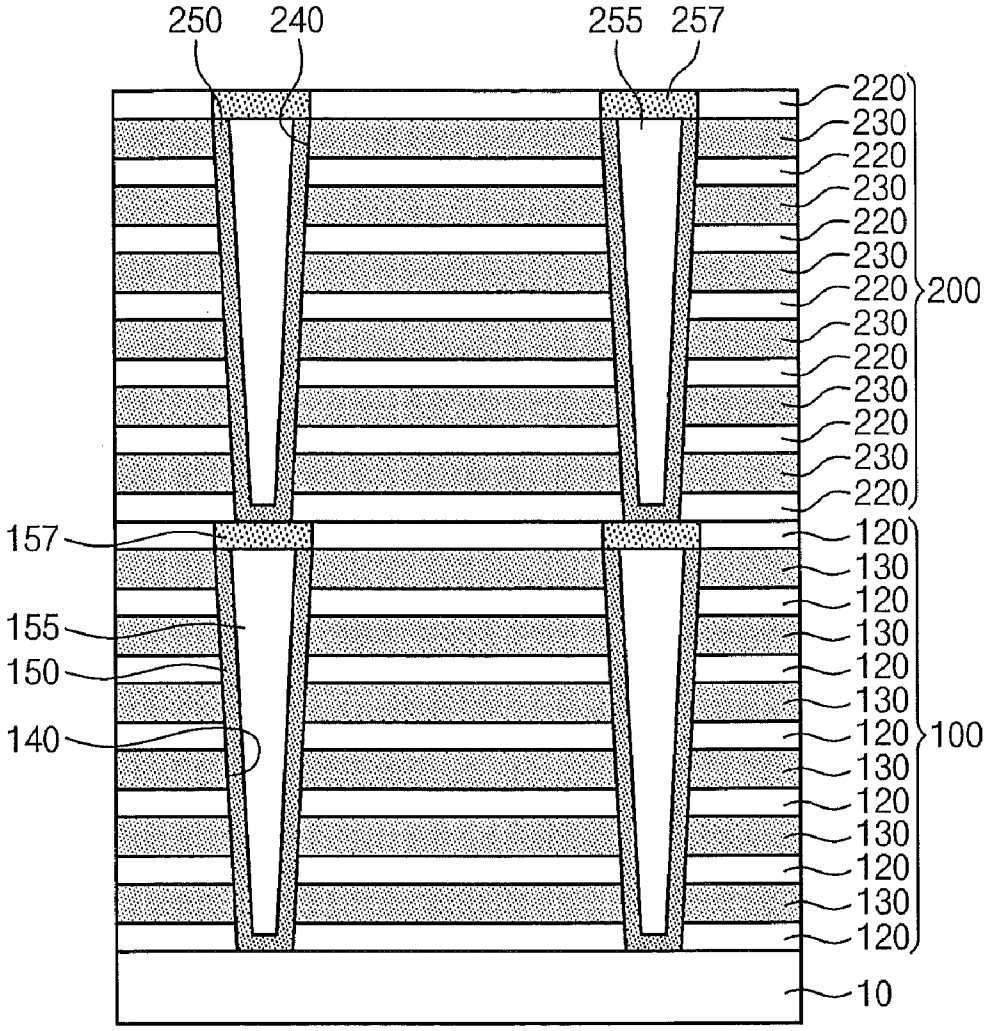
250
240
255
257
220
230
220
230
220
230
220
200
230
220
230
220
230
220
157
120
130
120
155
130
150
120
130
140
120
100
130
120
130
120
130
120
10

Fig. 3C

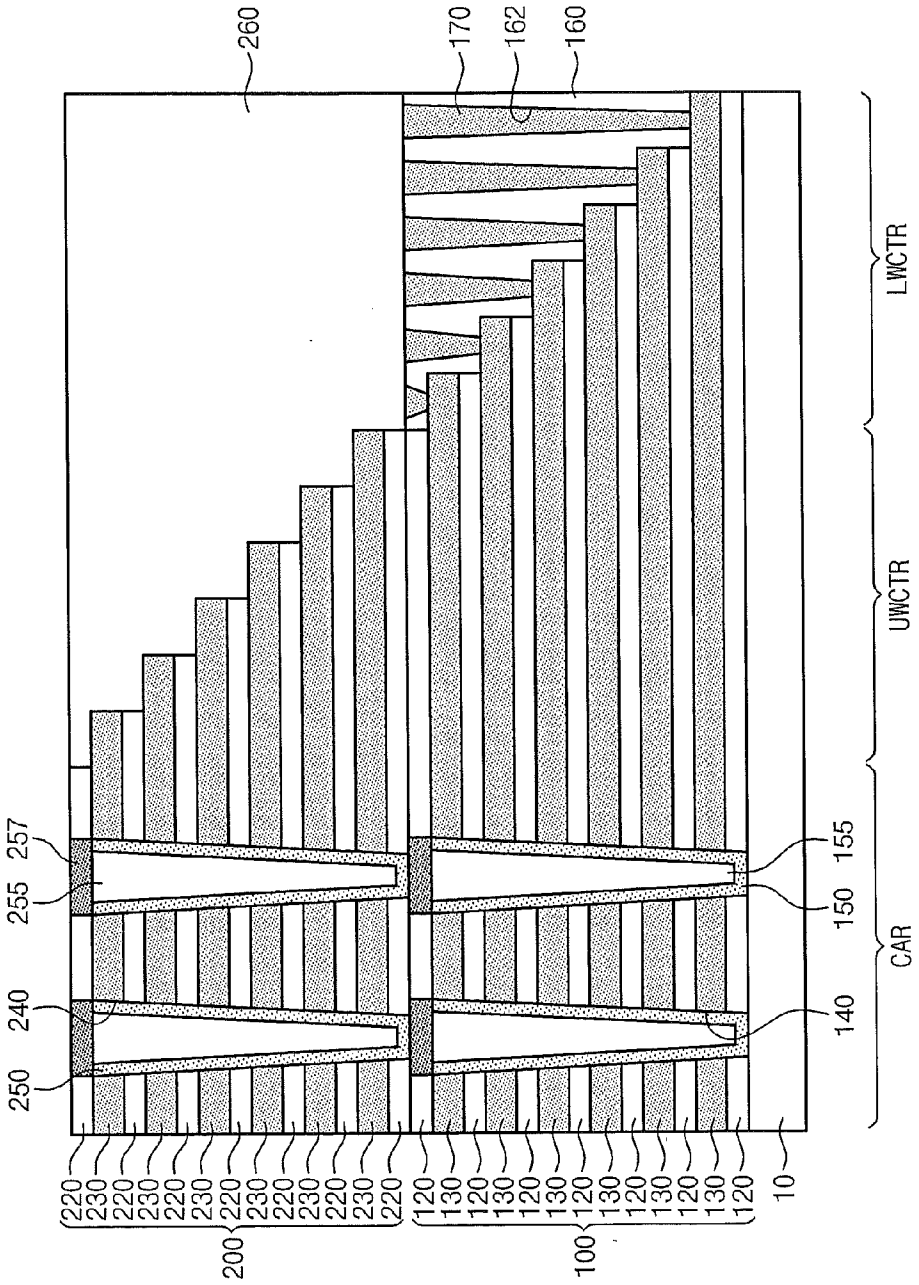
260
170
162
160
257
255
240
250
155
150
140
LWCTR
UWCTR
CAR
220
230
200
120
130
100
10

Fig. 4A

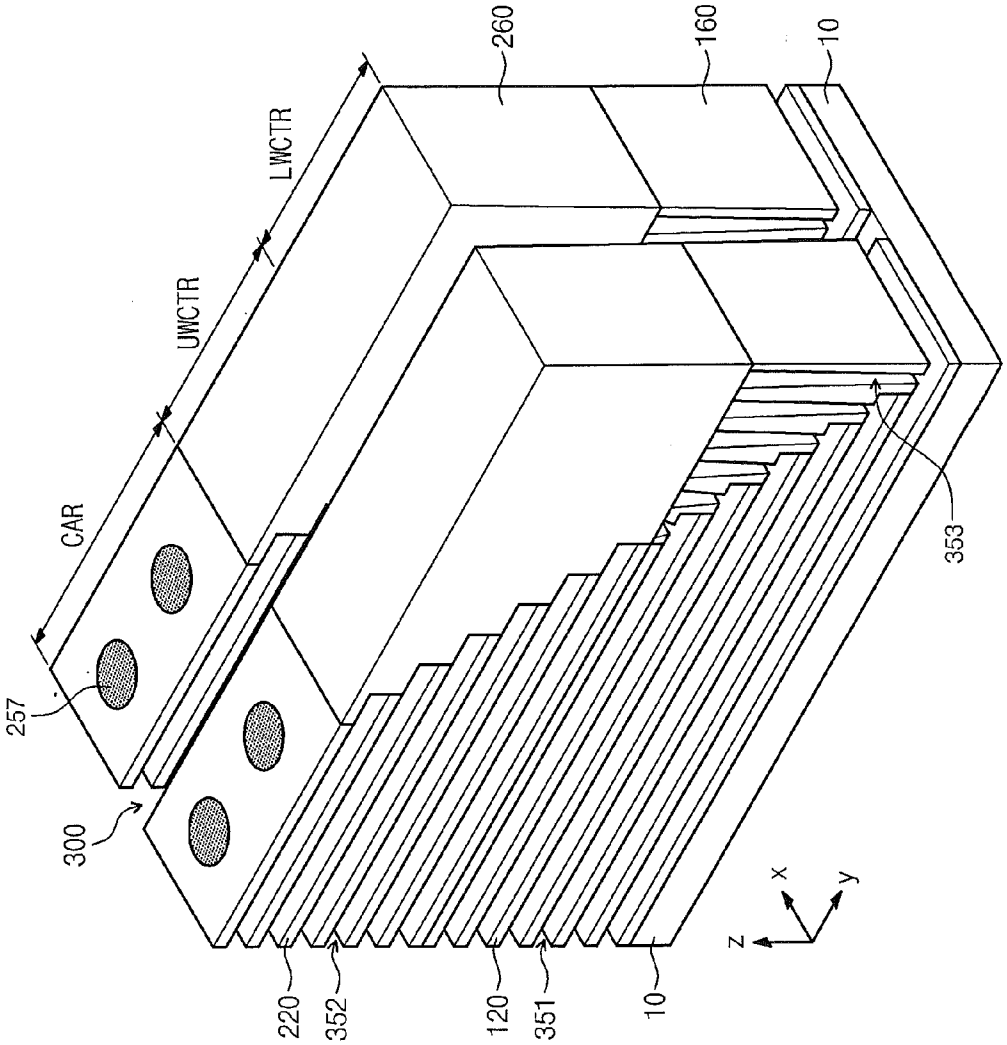

Fig. 4B

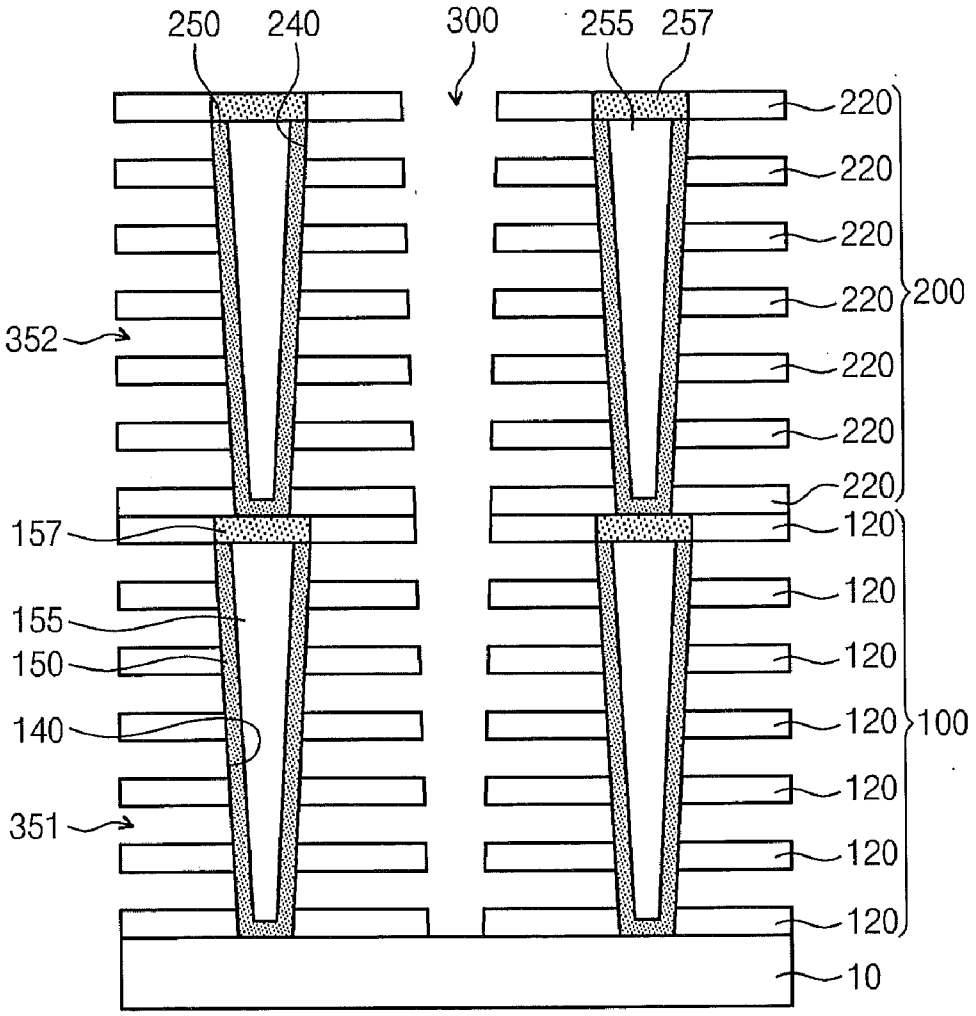
250
240
300
255
257
220
220
220
220
200
352
220
220
220
157
120
120
155
150
120
140
120
100
120
351
120
120
10

Fig. 4C

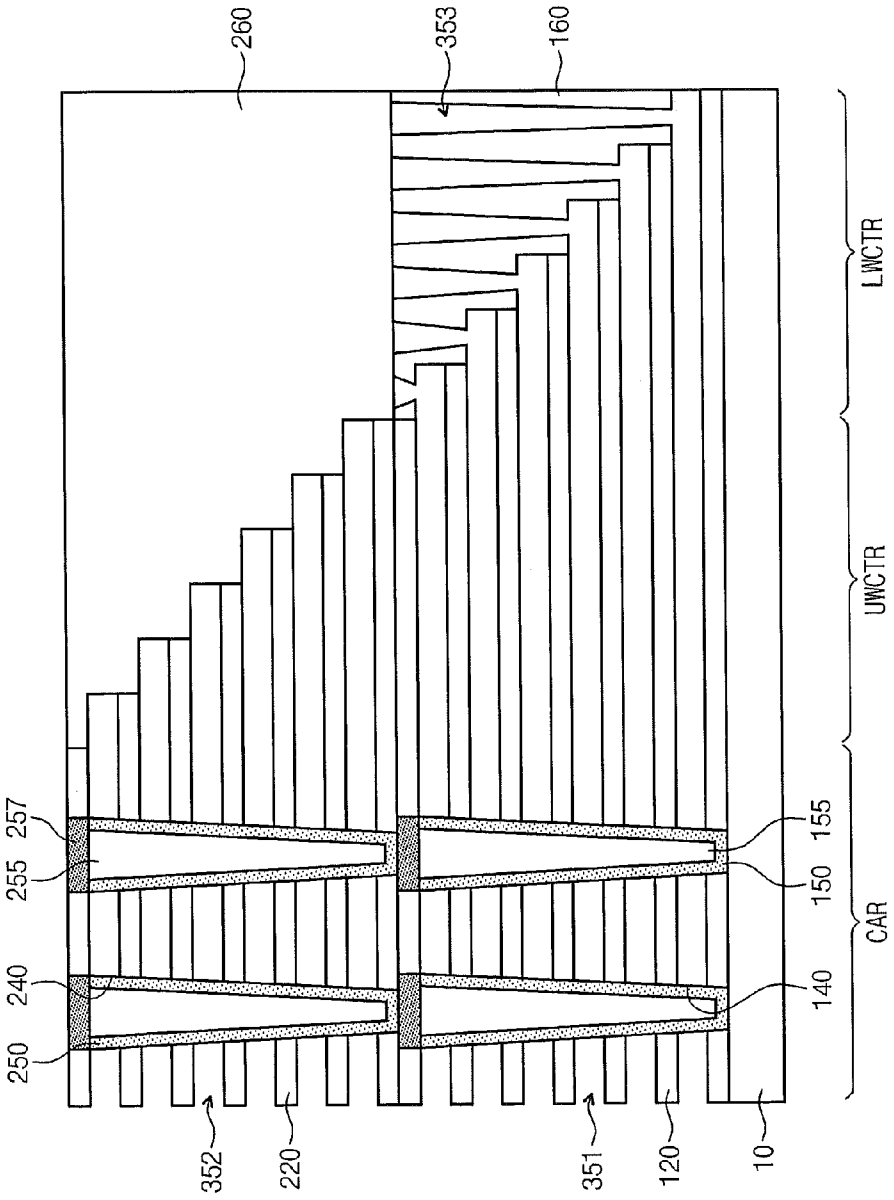
260
353
160
LWCTR
UWCTR
CAR
257
255
240
250
155
150
140
352
220
351
120
10

Fig. 5A

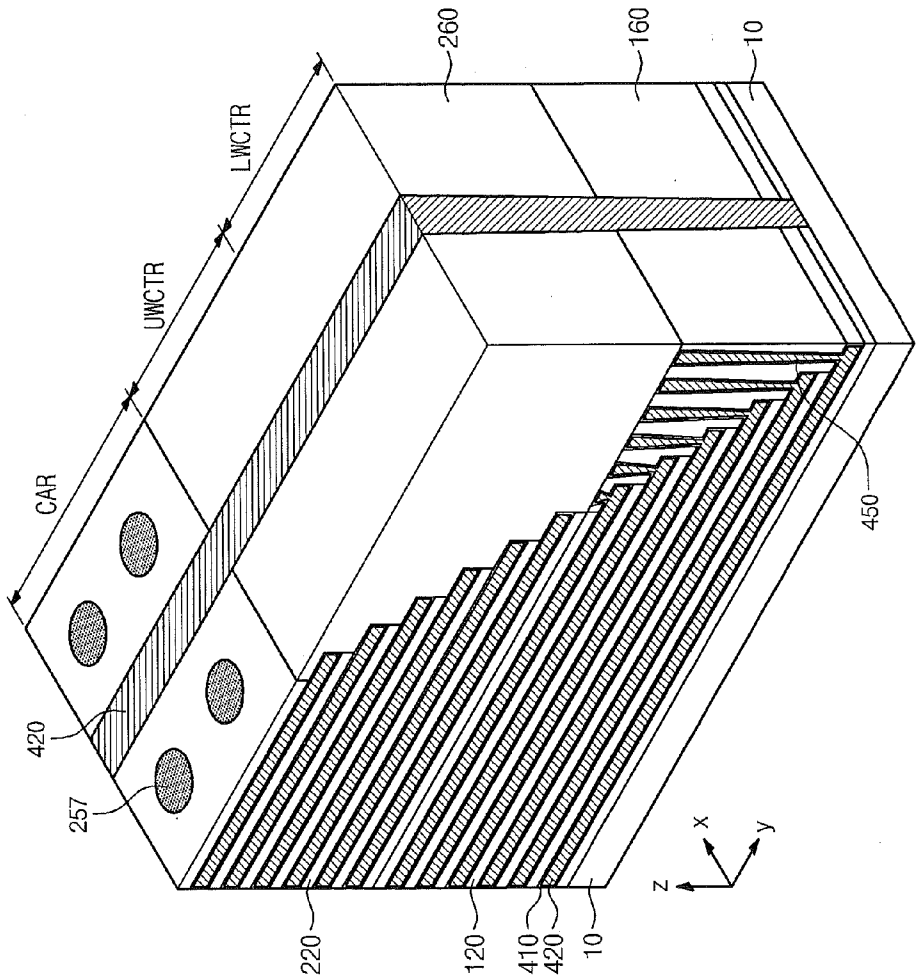

Fig. 5B

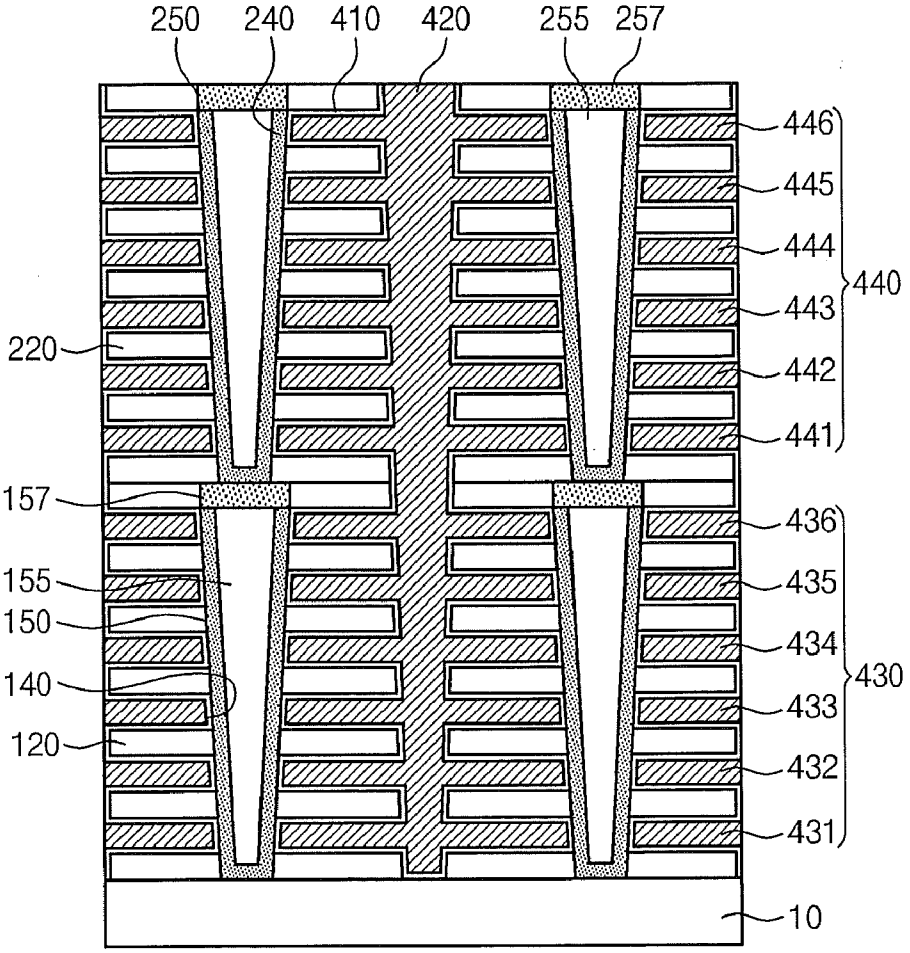
250
240
410
420
255
257
446
445
444
443
442
441
440
220
157
436
435
434
433
432
431
430
155
150
140
120
10

Fig. 5C

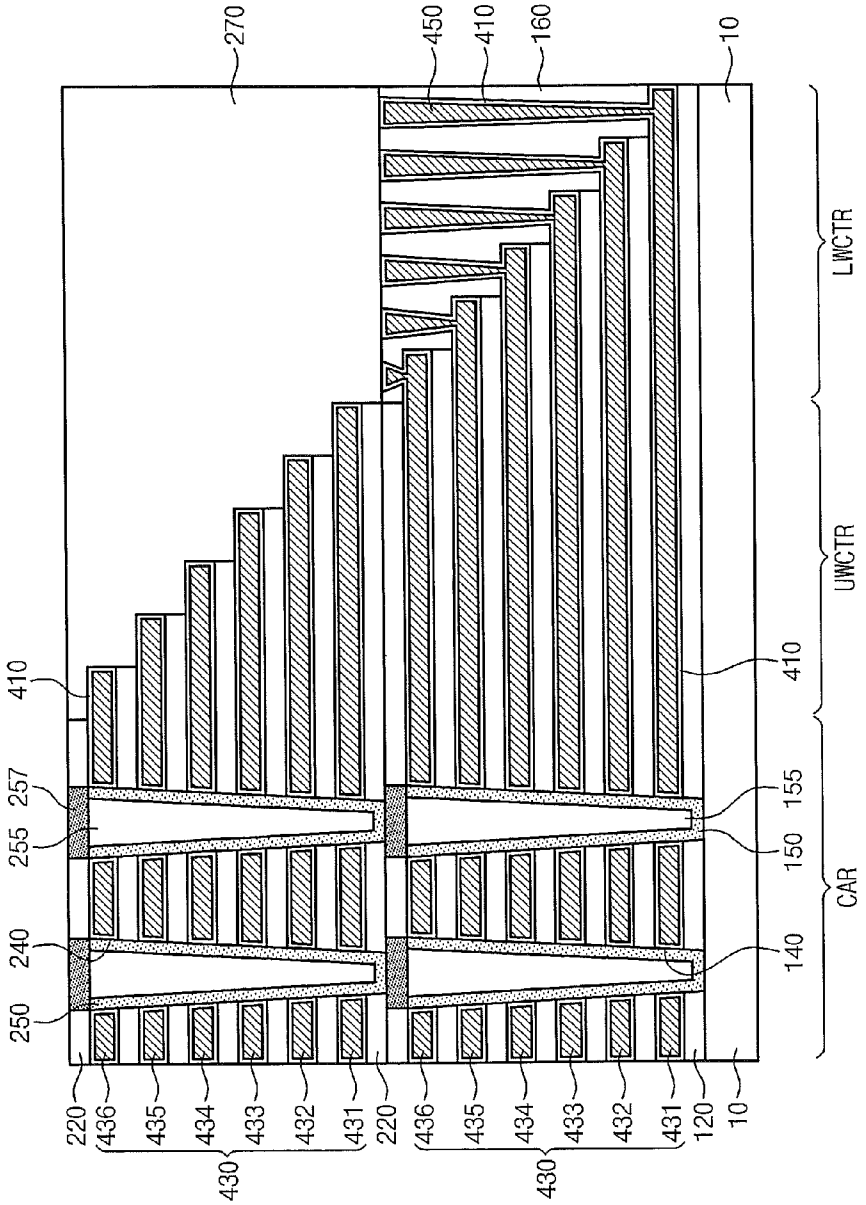
270
450
410
160
10
LWCTR
UWCTR
CAR
410
257
255
240
250
155
150
140
220
436
435
434
433
432
431
430
120

Fig. 6A

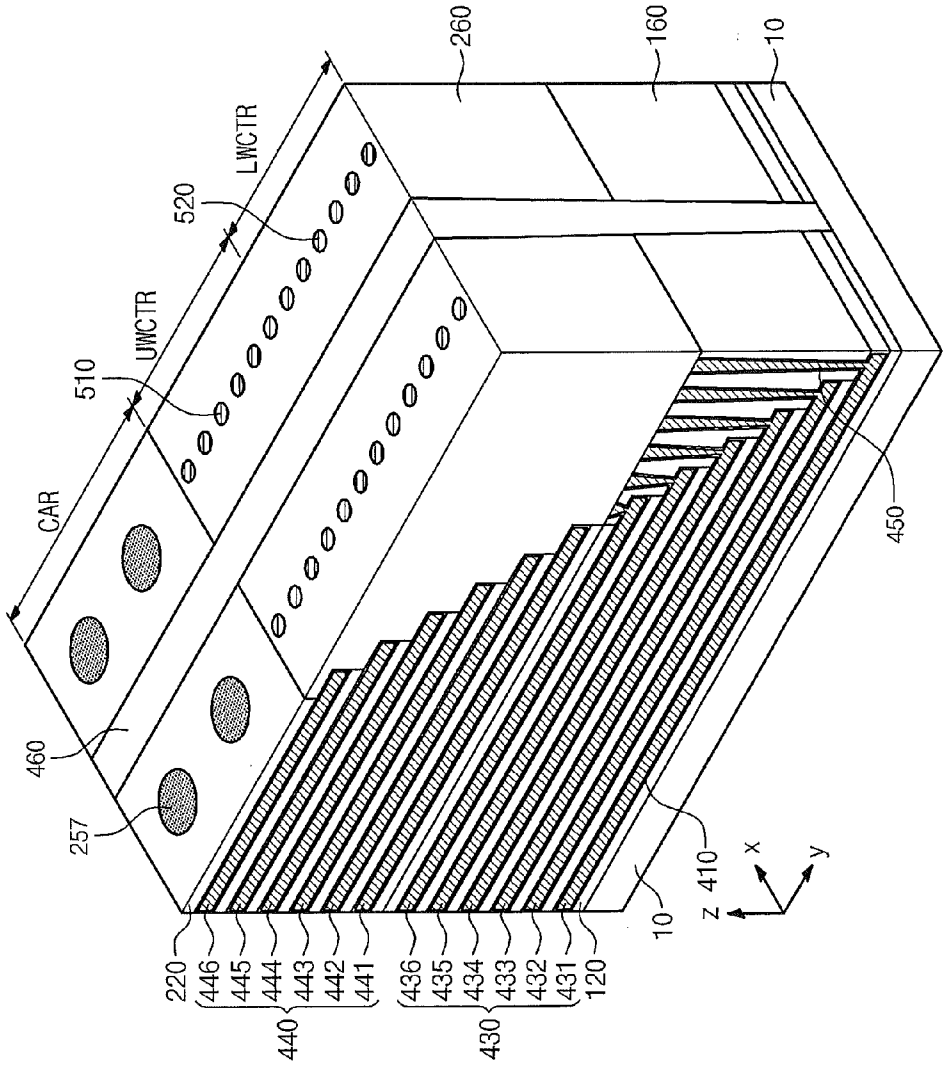
CAR
510
UWCTR
520
LWCTR
460
257
220
446
445
444
443
442
441
440
436
435
434
433
432
431
430
120
10
410
z
x
y
260
160
10
450

Fig. 6B

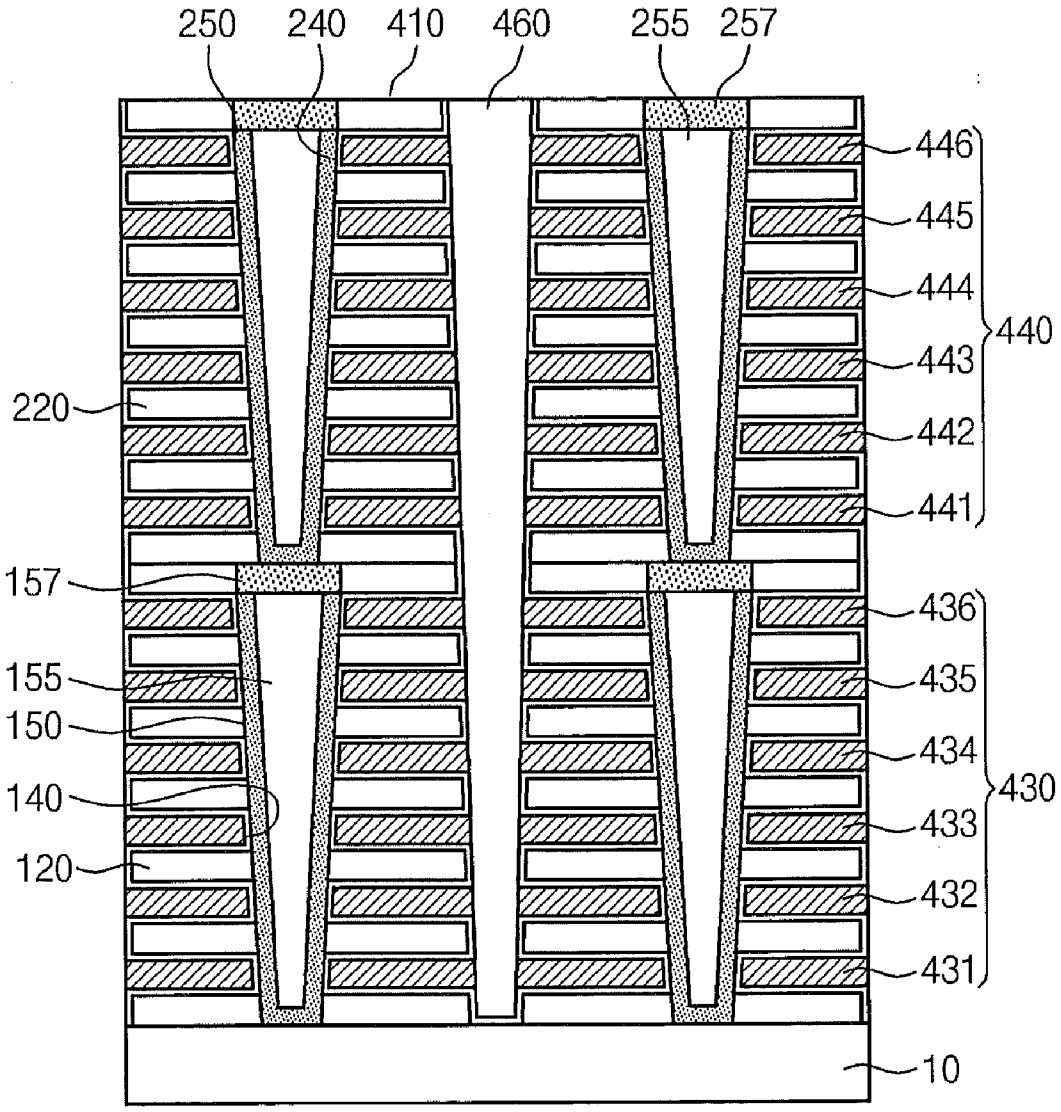
250
240
410
460
255
257
446
445
444
443
442
441
440
220
157
436
435
434
433
432
431
430
155
150
140
120
10

Fig. 6C

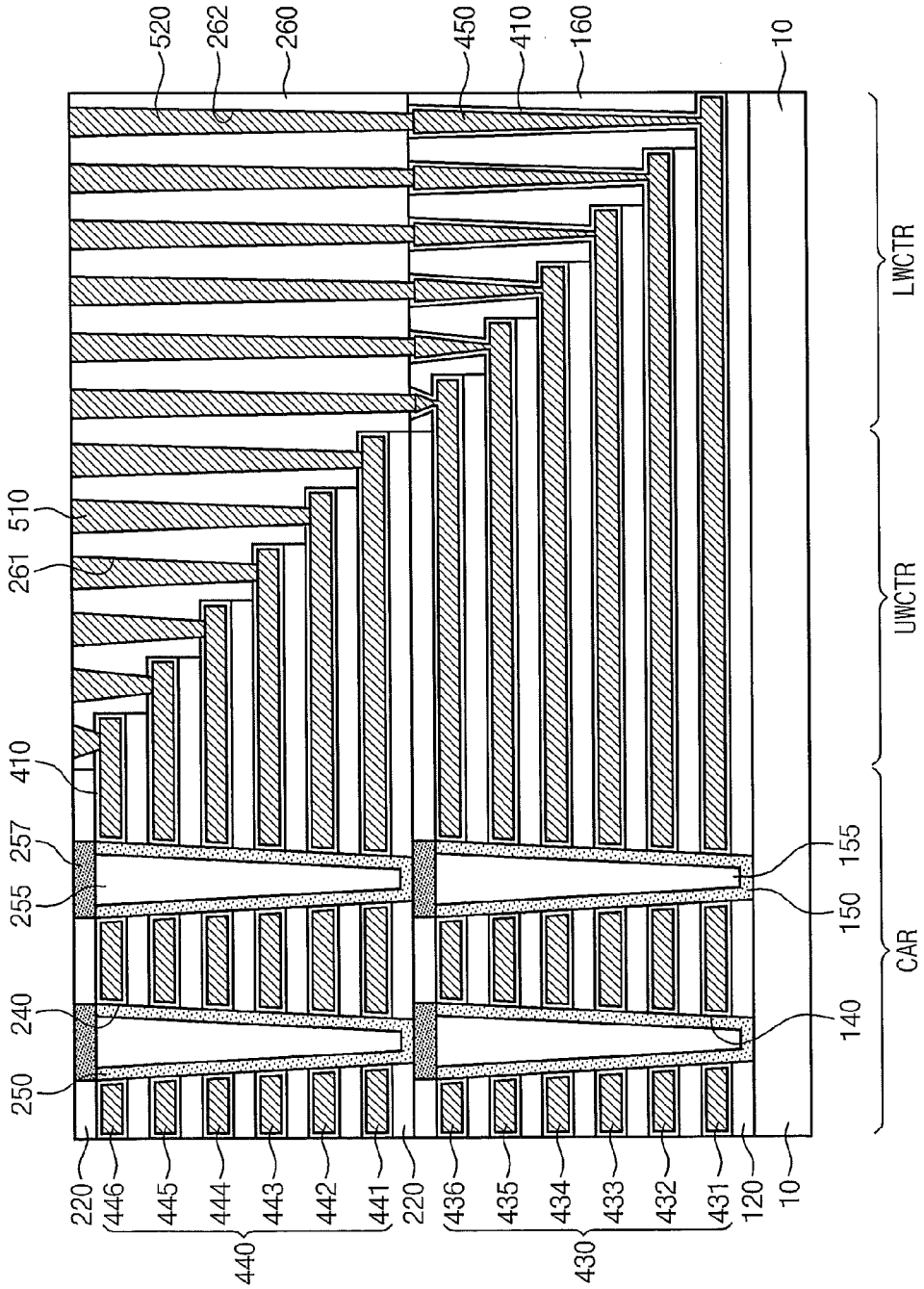
520
262
260
450
410
160
10
510
261
410
257
255
240
250
155
150
140
LWCTR
UWCTR
CAR
220
446
445
444
443
442
441
220
436
435
434
433
432
431
120
10
440
430

Fig. 7

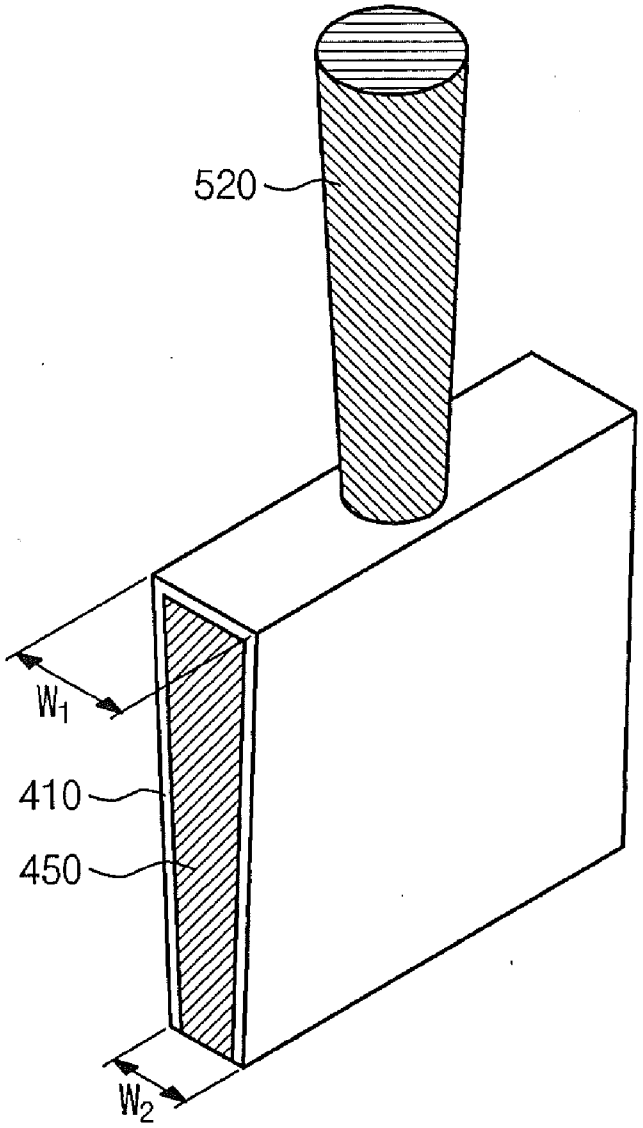

Fig. 8

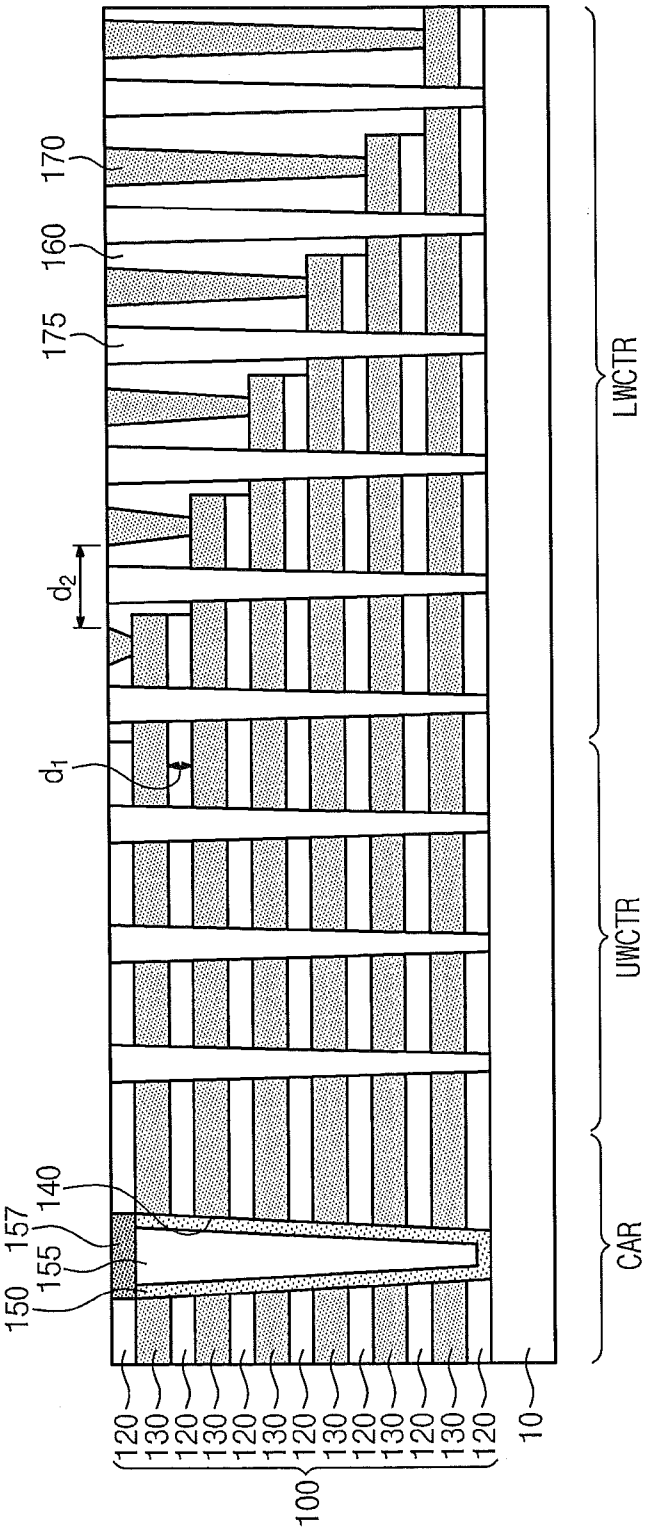

Fig. 9

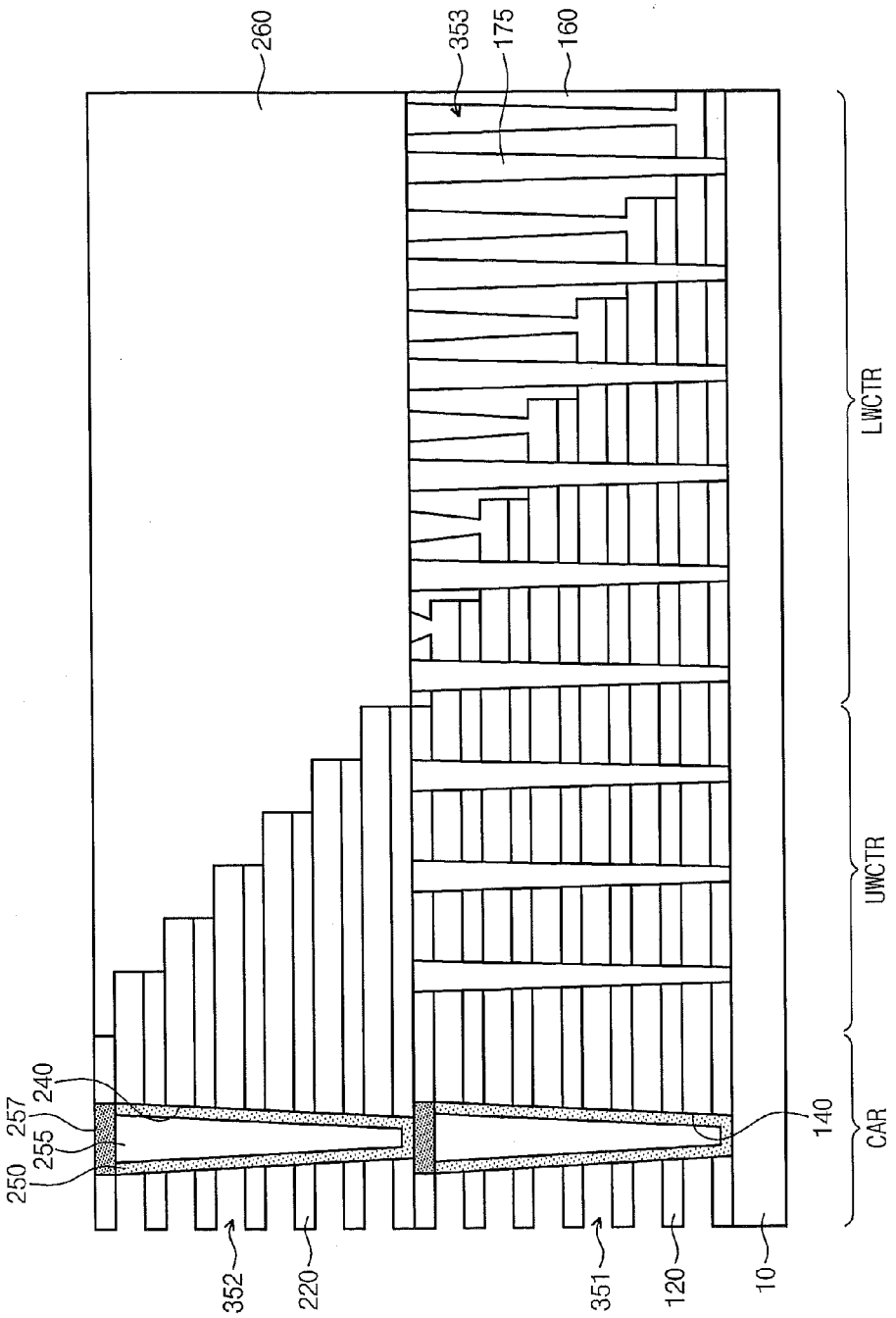
260
353
175
160
LWCTR
UWCTR
CAR
240
257
255
250
140
352
220
351
120
10

Fig. 10A

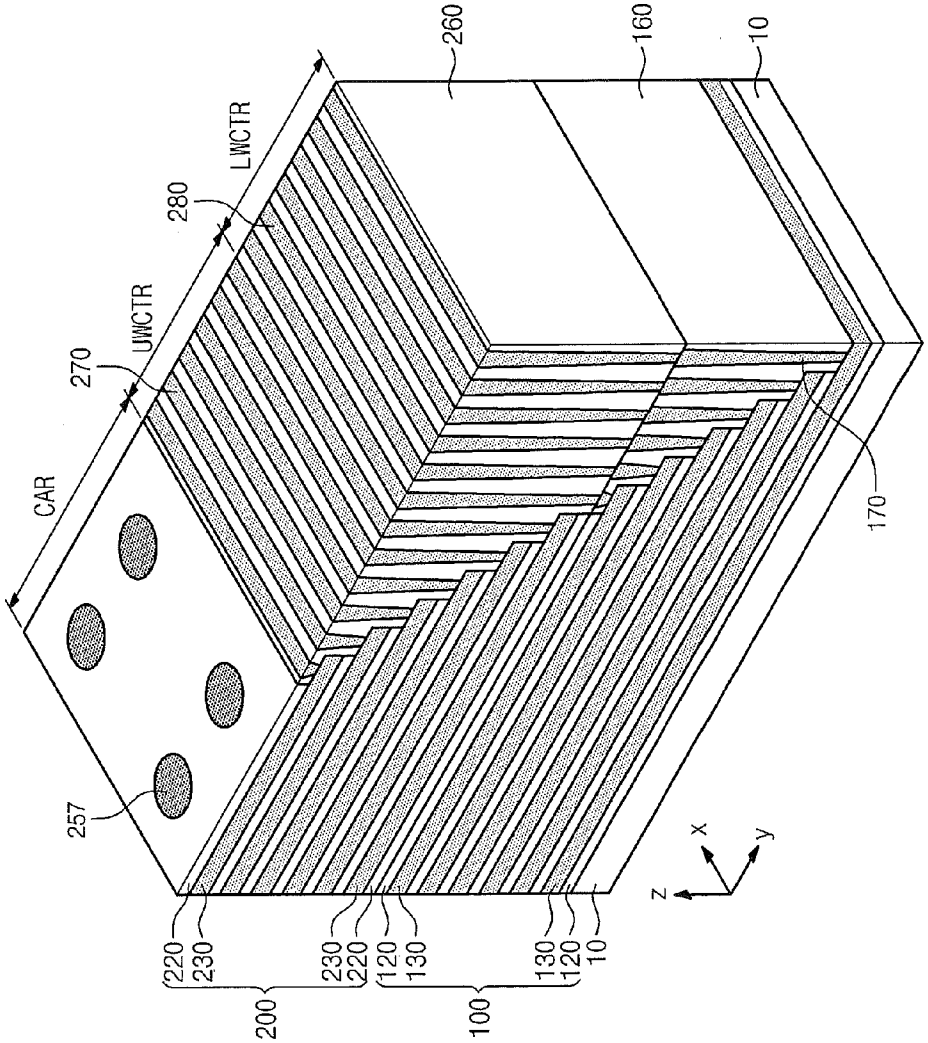
CAR
257
270
UWCTR
280
LWCTR
260
160
10
170
220
230
200
230
220
120
130
100
130
120
10
z
x
y

Fig. 10B

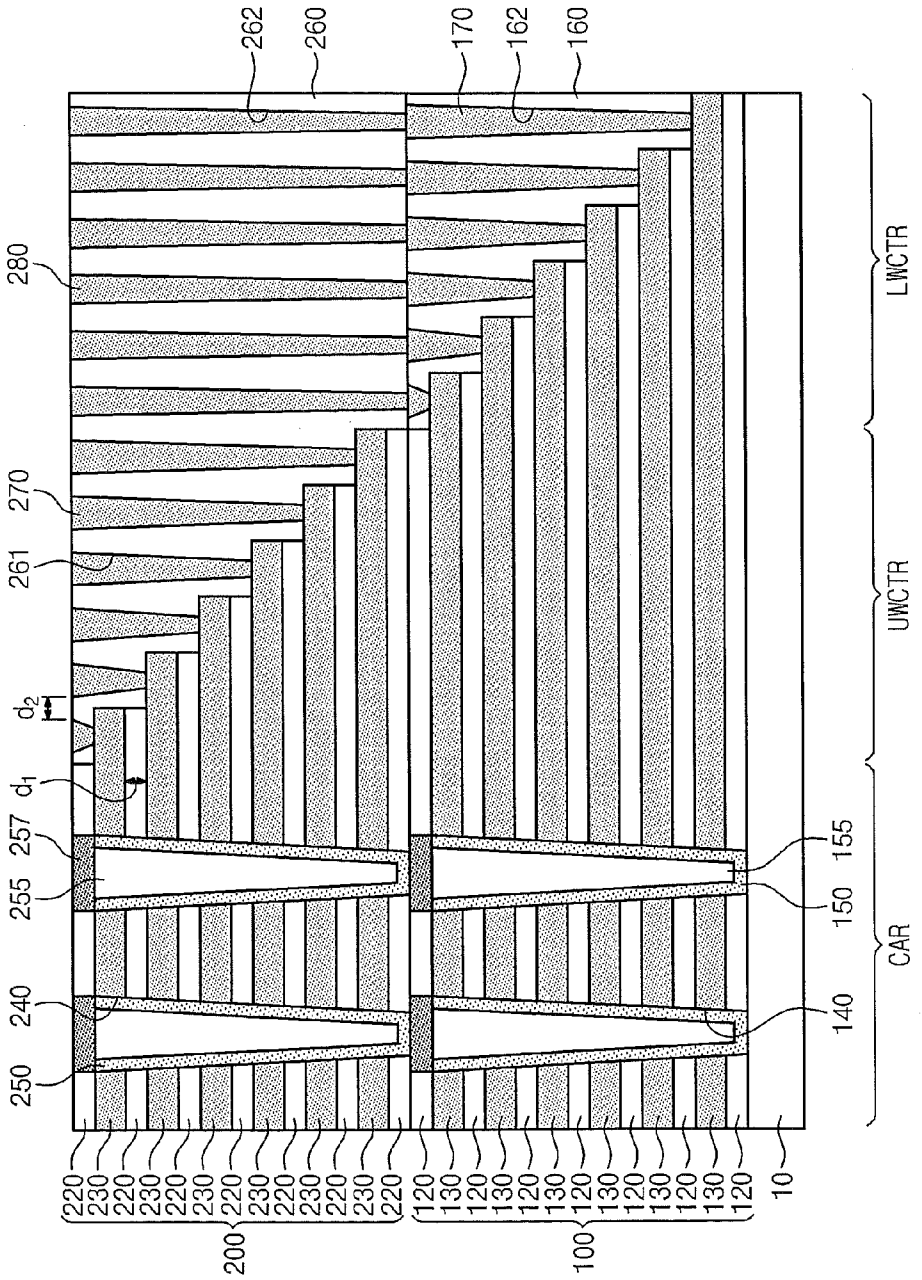
262
260
170
162
160
280
270
261
d_2
d_1
257
255
240
250
155
150
140
LWCTR
UWCTR
CAR
220
230
200
120
130
100
10

Fig. 11A

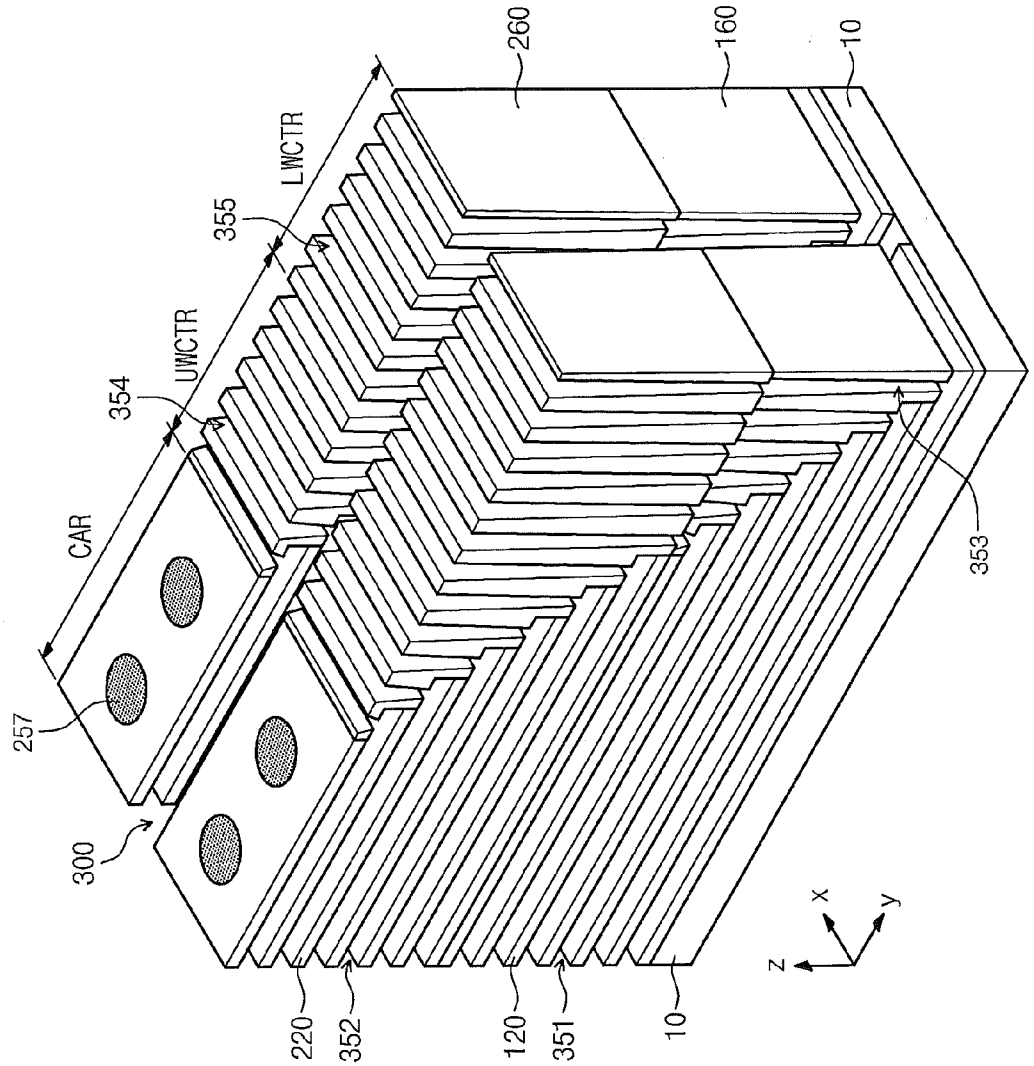
260
160
10
LWCTR
355
UWCTR
354
CAR
257
300
353
220
352
120
351
10
z
x
y

Fig. 11B

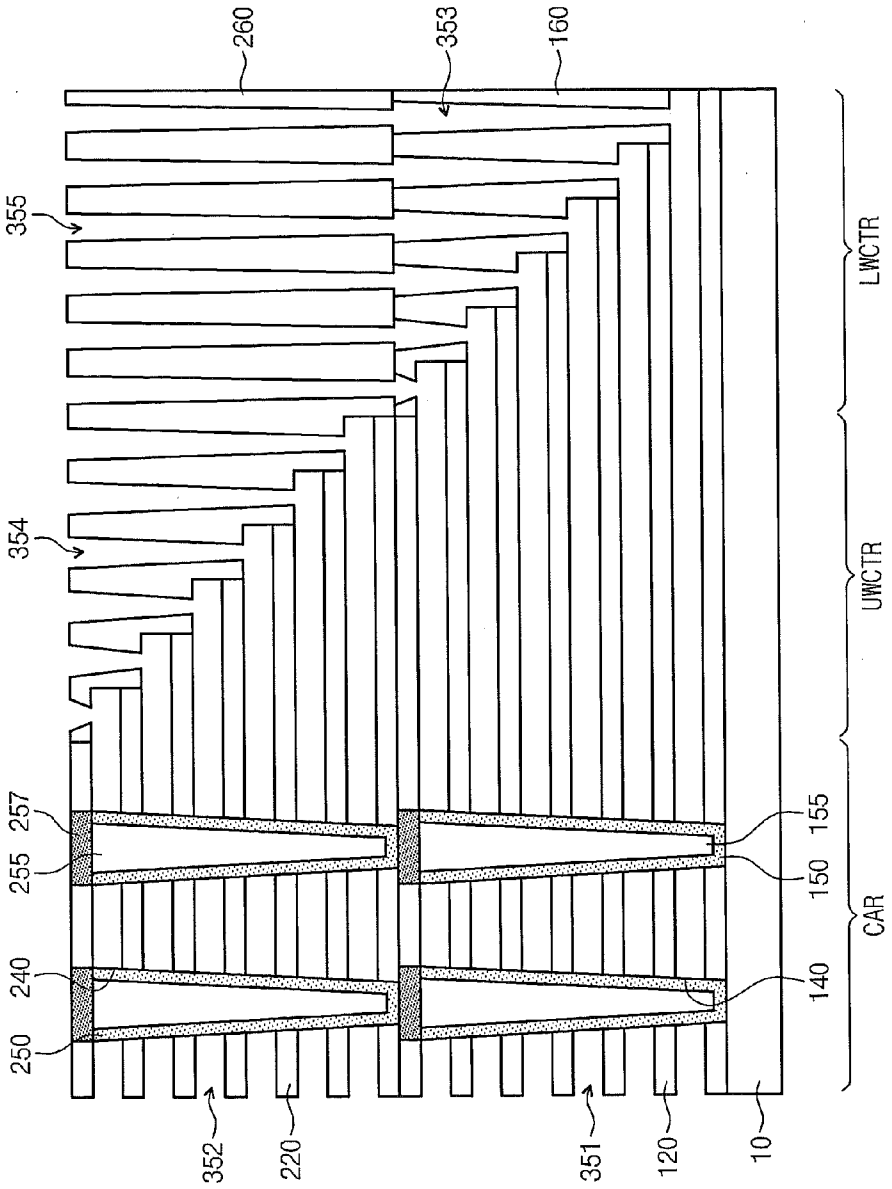
260
353
160
355
354
257
255
240
250
352
220
351
120
10
155
150
140
LWCTR
UWCTR
CAR

Fig. 12A

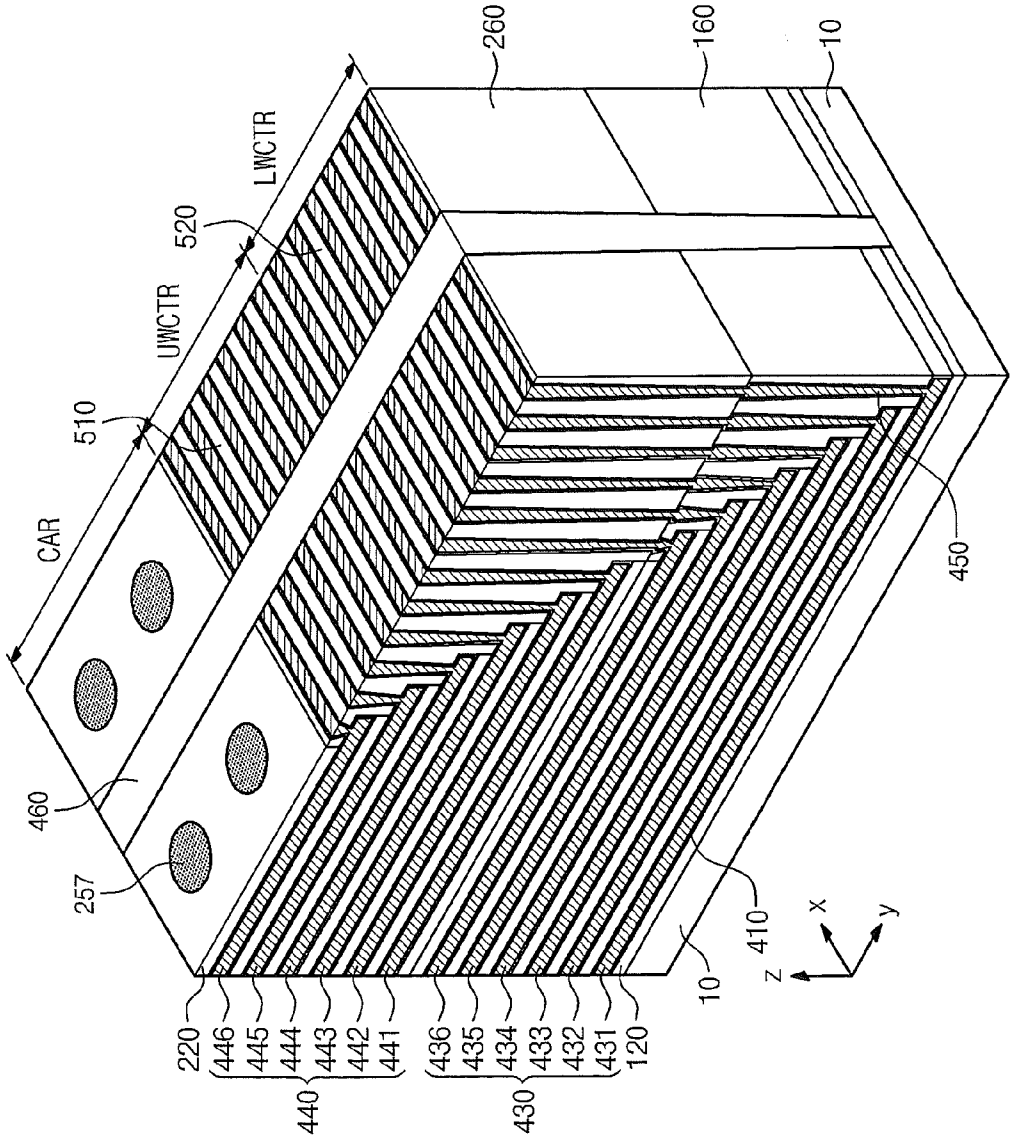
CAR
510
UWCTR
520
LWCTR
460
257
220
446
445
444
443
442
441
440
436
435
434
433
432
431
430
120
10
410
z
x
y
260
160
10
450

Fig. 12B

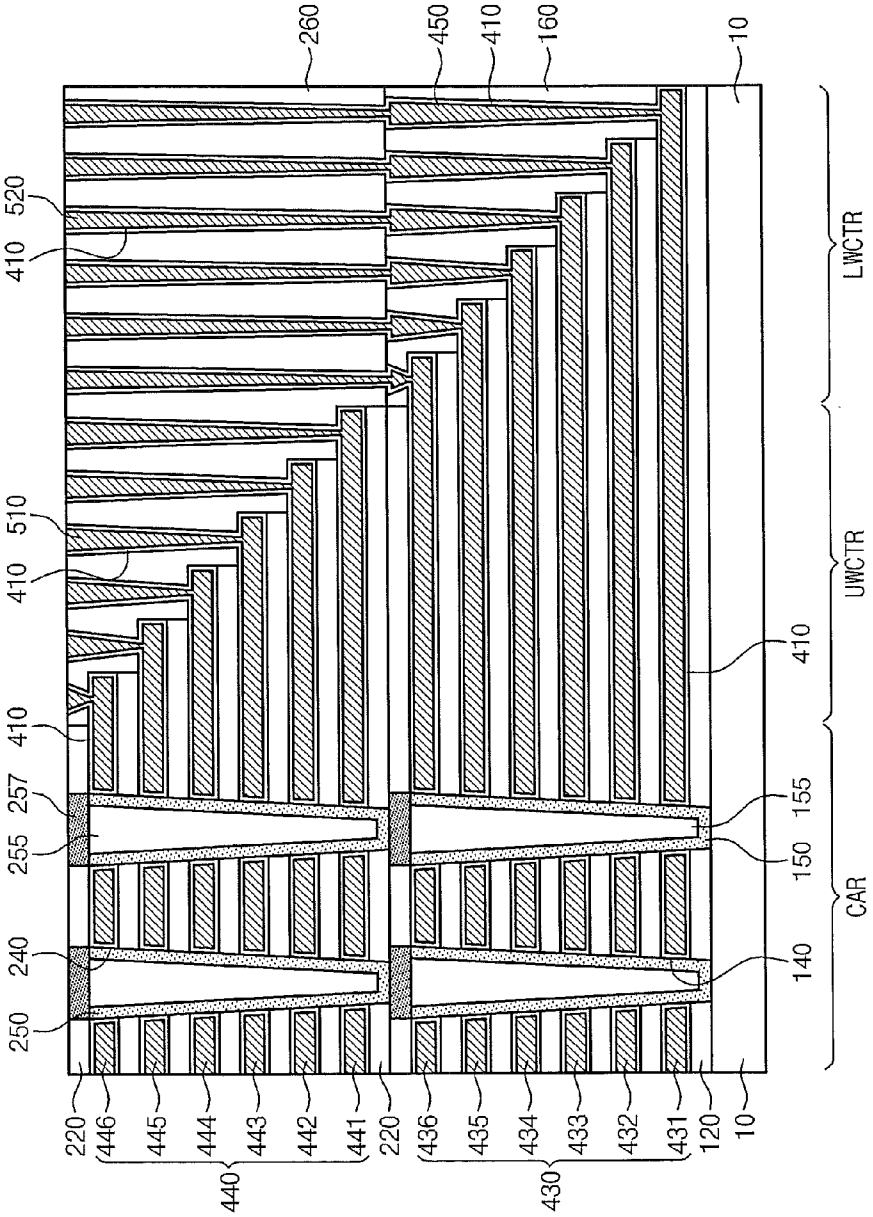
260
450
410
160
10
520
410
510
410
410
257
255
240
250
410
155
150
140
LWCTR
UWCTR
CAR
220
446
445
444
443
442
441
220
436
435
434
433
432
431
120
10
440
430

Fig. 13

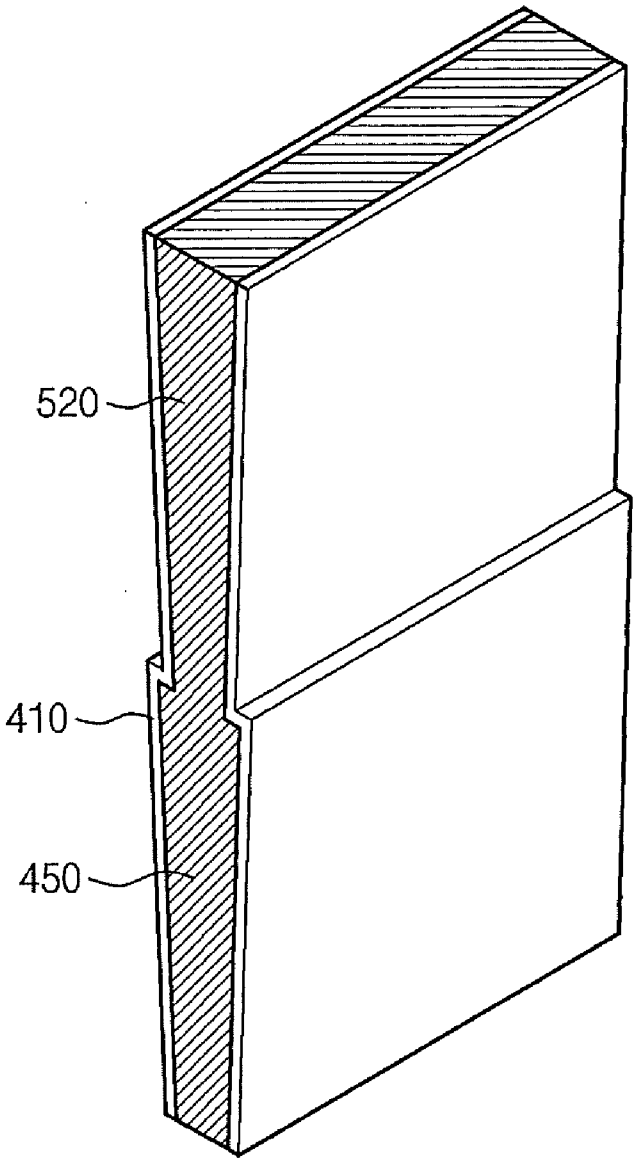

Fig. 14

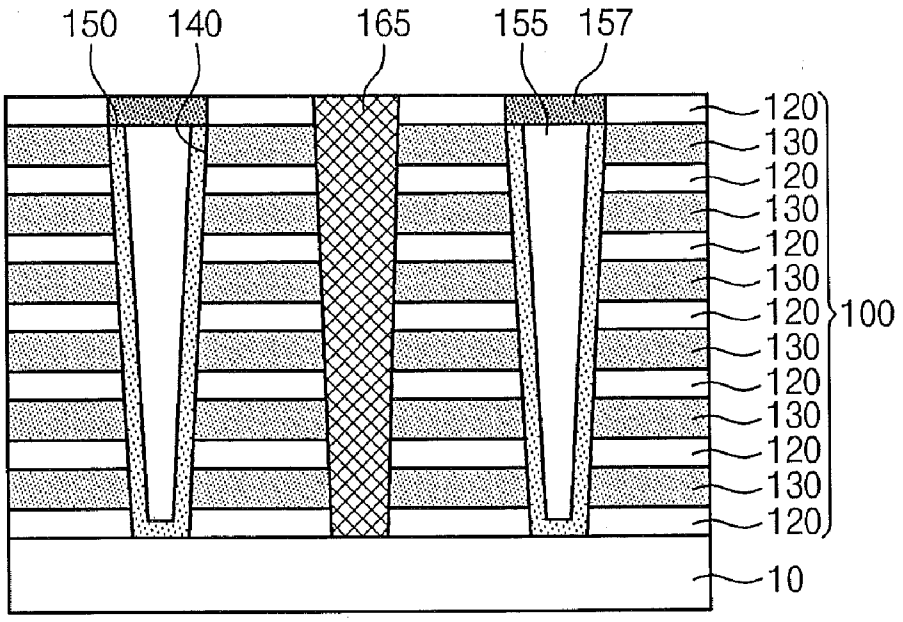
150
140
165
155
157
120
130
120
130
120
130
120
130
120
130
120
130
120
100
10

Fig. 15

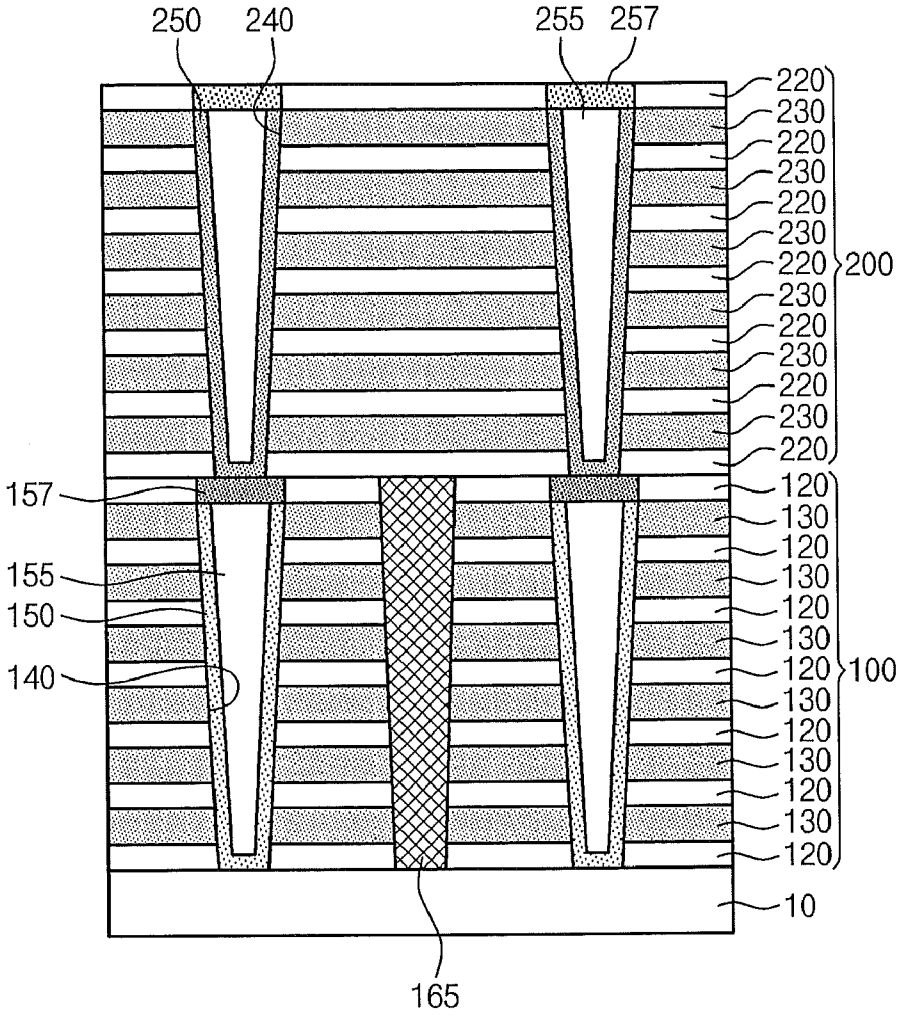
250
240
255
257
220
230
220
230
220
230
220
200
230
220
230
220
230
220
157
120
130
120
155
130
150
120
130
140
120
100
130
120
130
120
130
120
10
165

Fig. 16

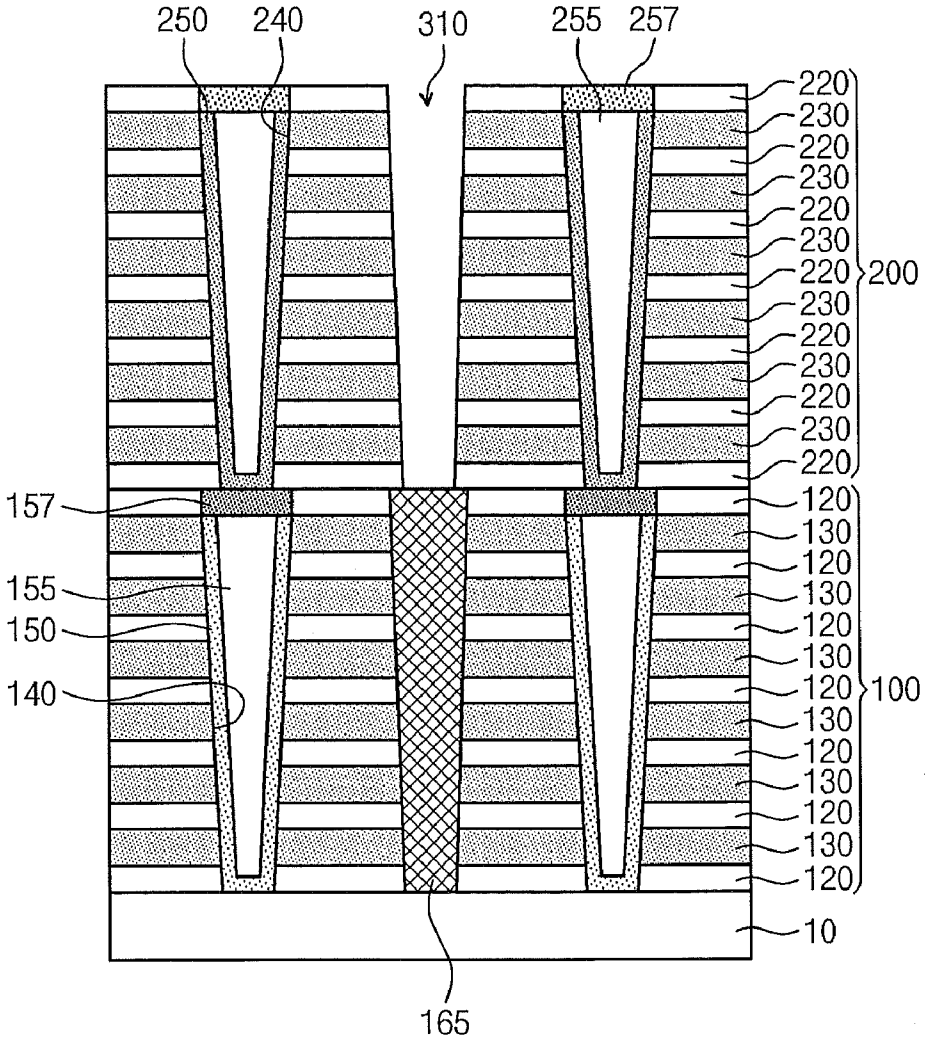
250
240
310
255
257
220
230
220
230
220
230
220
200
230
220
230
220
230
220
157
120
130
120
155
130
150
120
130
140
120
100
130
120
130
120
130
120
10
165

Fig. 17

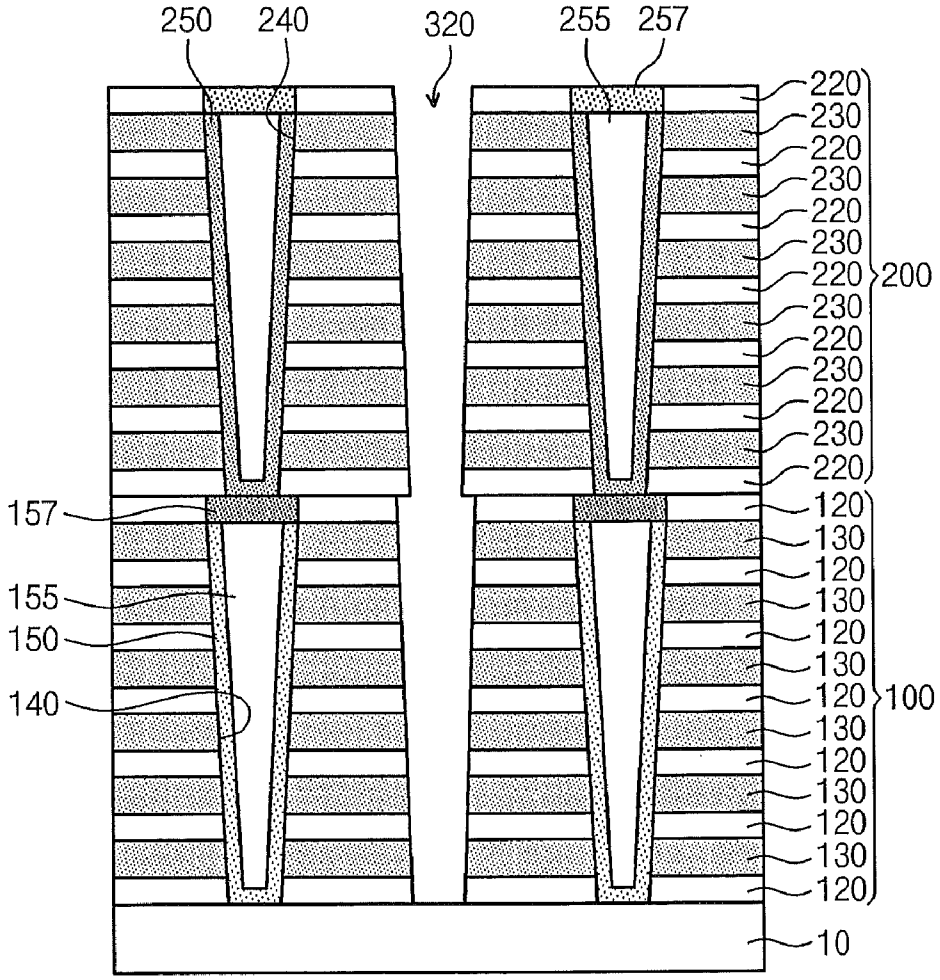
250
240
320
255
257
220
230
220
230
220
230
220
230
220
230
220
230
220
200
157
155
150
140
120
130
120
130
120
130
120
130
120
130
120
130
120
100
10

Fig. 18

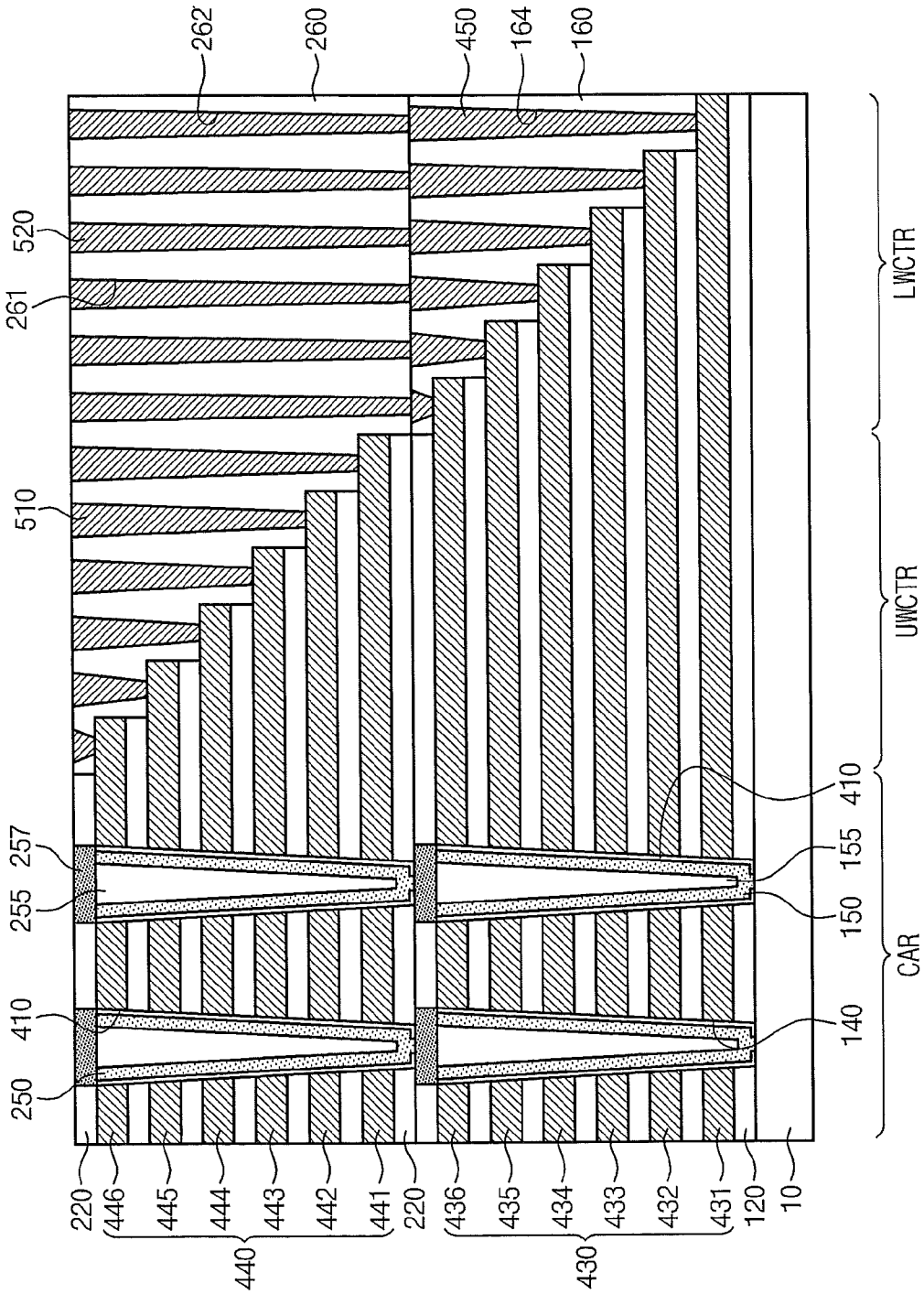
262
260
450
164
160
520
261
510
257
255
410
250
220
446
445
444
443
442
441
220
436
435
434
433
432
431
120
10
440
430
410
155
150
140
LWCTR
UWCTR
CAR

Fig. 19

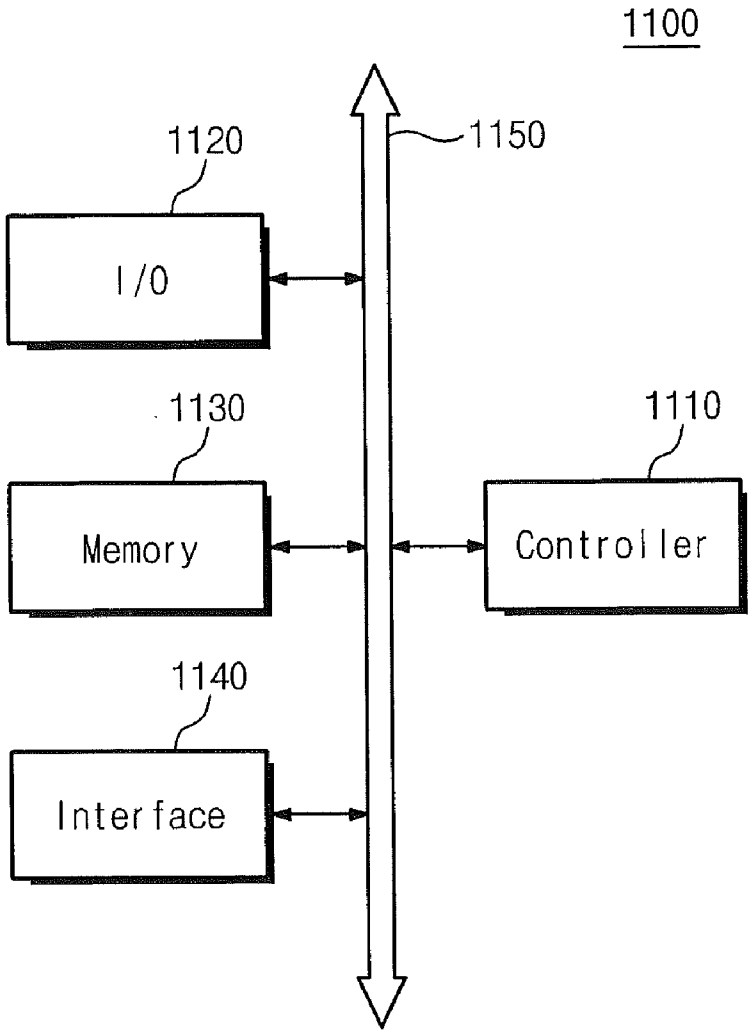
1100
1150
1120
I/O
1130
Memory
1110
Controller
1140
Interface

Fig. 20

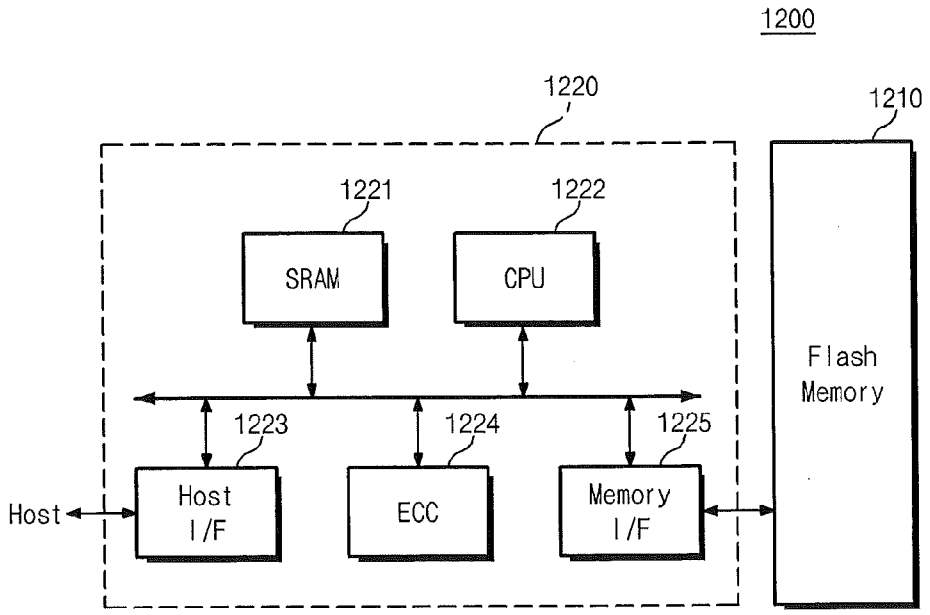
1200
1220
1210
1221
1222
SRAM
CPU
Flash Memory
1223
1224
1225
Host
Host I/F
ECC
Memory I/F

Fig. 21

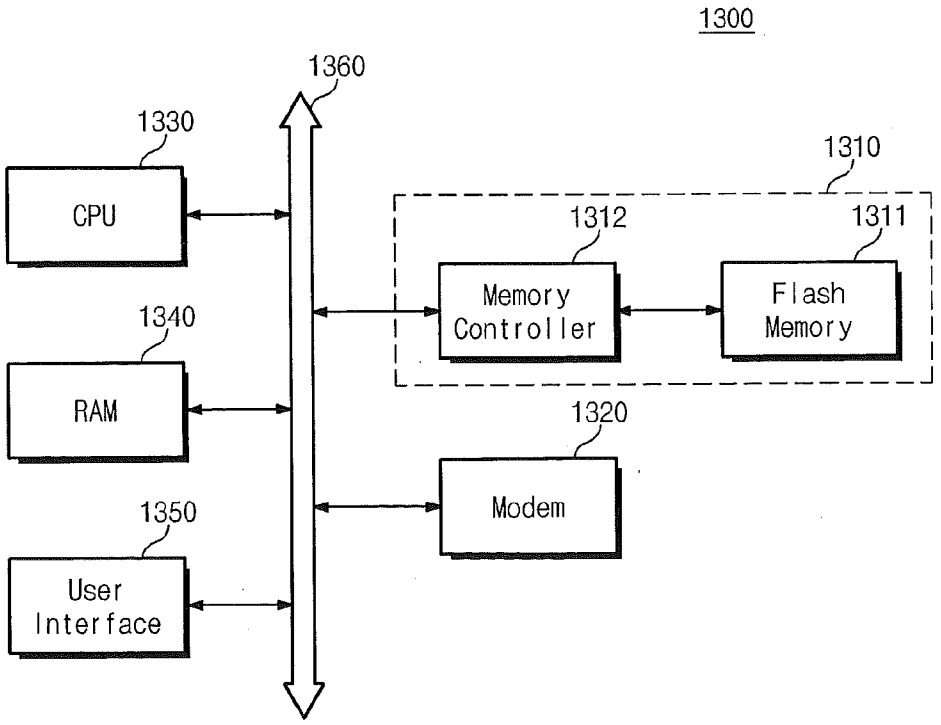
1300
1360
1330
CPU
1310
1312
1311
Memory Controller
Flash Memory
1340
RAM
1320
Modem
1350
User Interface

METHODS OF MANUFACTURING THREE-DIMENSIONAL SEMICONDUCTOR DEVICES AND RELATED DEVICES

CROSS-REFERENCE TO RELATED APPLICATIONS

[0001] This U.S. non-provisional patent application claims the benefit of priority under 35 U.S.C. §119 of Korean Patent Application 10-2009-0126855, filed on Dec. 18, 2009, the disclosure of which is hereby incorporated herein in its entirety by reference.

BACKGROUND

[0002] The present disclosure herein relates to methods of manufacturing three-dimensional semiconductor devices and related three-dimensional semiconductor devices.

[0003] Recently, demand for higher integration of semiconductor devices has increased to obtain improved performance and/or low price for user needs. In semiconductor memory devices, higher integration may be particularly required, since integration is a significant factor in determining prices. In two-dimensional or planar semiconductor devices, since the integration degree mainly depends on an area occupied by a unit memory cell, integration is affected by the technique(s) used to form fine patterns. In order to realize minute patterns, however, an increase in integration of the two dimensional semiconductor devices may be restricted since it may be necessary to install expensive equipment.

[0004] In order to overcome these restrictions, there have been suggested three-dimensional semiconductor devices including memory cells arranged three-dimensionally. In order to realize mass production of the three-dimensional devices, however, a manufacturing technique may be required to achieve reliable product characteristics while reducing a manufacturing cost per bit more than that of two dimensional semiconductor devices.

SUMMARY

[0005] Embodiments of inventive concepts may provide a method of manufacturing the three-dimensional semiconductor device. A substrate may be prepared including a wiring region and a contact region. A thin film structure may be formed including a plurality of sacrificial layers and inter-layer insulating layers alternately laminated on the substrate and having a terraced shape in the contact region. An insulating layer may be formed covering the thin film structure in the contact region. Sacrificial contact patterns may be formed connected vertically to the sacrificial layers in the contact region, respectively. Horizontal recess regions may be formed between the inter-layer insulating layers and contact recess regions extending from the horizontal recess regions in the insulating layer by removing both the sacrificial layers and the sacrificial contact patterns, and forming wiring patterns and contact plugs extending continuously from the wiring patterns, respectively, by filling the horizontal contact recess regions and the contact recess regions with a conductive material.

[0006] Embodiments of the inventive concept may also provide a three-dimensional semiconductor device. A may substrate include a wiring region and a contact region. A plurality of wiring structures may be laminated on the substrate with each of the wiring structures including a wiring section parallel to an upper surface of the substrate in the wiring region and a contact section extending continuously from an end portion of the wiring section so as to be vertical to the substrate in the contact region. In this case, the distance between the contact sections adjacent to each other is larger than the distance between the wiring sections vertically adjacent to each other.

[0007] According to some embodiments of inventive concepts, a three-dimensional semiconductor device may include a substrate including wiring and contact regions and a thin film structure on the wiring and contact regions of the substrate. The thin-film structure may include a plurality of alternating wiring layers and inter-layer insulating layers defining a terraced structure in the contact region so that each of the wiring layers includes a contact surface in the contact region that extends beyond others of the wiring layers more distant from the substrate. A plurality of contact structures may extend in a direction perpendicular to a surface of the substrate with each of the contact structures being electrically connected to a contact surface of a respective one of the wiring layers.

[0008] According to some other embodiments of inventive concepts, a method of forming a three-dimensional semiconductor device may include forming a thin film structure on wiring and contact regions of a substrate. The thin film structure may include a plurality of alternating sacrificial layers and inter-layer insulating layers, and the thin film structure may define a terraced structure in the contact region. An insulating layer may be formed on the terraced structure in the contact region, and sacrificial contact patterns may be formed through the insulating layer in the contact region in a direction perpendicular with respect to a surface of the substrate, with each of the sacrificial contact patterns being connected to a respective one of the sacrificial layers. The sacrificial layers and the sacrificial contact patterns may be removed to define recess regions between the inter-layer insulating layers and through the insulating layer, and wiring patterns may be formed in the recess regions between the inter-layer insulating layers and through the insulating layer.

BRIEF DESCRIPTION OF THE DRAWINGS

[0009] The accompanying drawings are included to provide a further understanding of inventive concepts, and are incorporated in and constitute a part of this specification. The drawings illustrate exemplary embodiments of inventive concepts and, together with the description, serve to explain principles of inventive concept. In the drawings:

[0010] FIGS. **1**A, **2**A, **3**A, **4**A, **5**A, and **6**A are perspective views illustrating sequential operations of a method of manufacturing a three-dimensional semiconductor device according to first embodiments of inventive concepts;

[0011] FIGS. **1**B, **2**B, **3**B, **4**B, **5**B, and **6**B are cross sectional views illustrating sequential operations of the method of manufacturing the three-dimensional semiconductor device according to the first embodiments of inventive concepts along an x-z plane of FIGS. **1**A, **2**A, **3**A, **4**A, **5**A, and **6**A;

[0012] FIGS. **1**C, **2**C, **3**C, **4**C, **5**C, and **6**C are cross sectional views illustrating sequential operations of manufacturing the three-dimensional semiconductor device according to the first embodiments of inventive concepts along a y-z plane of FIGS. **1**A, **2**A, **3**A, **4**A, **5**A, and **6**A;

[0013] FIG. **7** is a perspective view illustrating a contact structure of the three-dimensional semiconductor device according to first embodiments of inventive concepts;

[0014] FIGS. **8** and **9** are cross sectional views illustrating methods of manufacturing a three-dimensional semiconductor device according to a modification of the first embodiments of inventive concepts;

[0015] FIGS. **10**A, **11**A, and **12**A are perspective views illustrating sequential operations of manufacturing a three-dimensional semiconductor device according to second embodiments of inventive concepts;

[0016] FIGS. **10**B, **11**B, and **12**B are cross sectional views illustrating sequential operations of manufacturing the three-dimensional semiconductor device according to the second embodiments of inventive concepts along a y-z plane of FIGS. **10**A, **11**A, and **12**A;

[0017] FIG. **13** is a perspective view illustrating a contact structure of a three-dimensional semiconductor device according to second embodiments of inventive concepts;

[0018] FIGS. **14** through **17** are cross sectional views illustrating a method of manufacturing a three-dimensional semiconductor device according to third embodiments of inventive concepts;

[0019] FIG. **18** is a cross sectional view illustrating a three-dimensional semiconductor device according to fourth embodiments of inventive concepts;

[0020] FIG. **19** is a schematic block diagram illustrating an example of a memory system including a non-volatile memory device according to some embodiments of inventive concepts;

[0021] FIG. **20** is a schematic block diagram illustrating an example of a memory card including a non-volatile memory device according to some embodiments of inventive concepts; and

[0022] FIG. **21** is a schematic block diagram illustrating an example of an information processing system including a non-volatile memory device according to some embodiments of inventive concepts.

DETAILED DESCRIPTION OF THE EMBODIMENTS

[0023] Advantages and features of inventive concepts and methods of accomplishing the same may be understood more readily by reference to the following detailed description of embodiments and the accompanying drawings. Inventive concepts may, however, be embodied in many different forms and should not be construed as being limited to embodiments set forth herein. Rather, these embodiments are provided so that this disclosure will be thorough and complete and will fully convey inventive concepts to those skilled in the art, and inventive concepts will only be defined by the appended claims. Like reference numerals refer to like elements throughout the specification.

[0024] It will be understood that when an element is referred to as being "on", "connected to", or "coupled to" another element, it can be directly on, directly connected to, or directly coupled to the other element or intervening elements may be present. In contrast, when an element is referred to as being "directly on", "directly connected to", or "directly coupled to" another element, there are no intervening elements present. Like numbers refer to like elements throughout. As used herein, the term "and/or" includes any and all combinations of one or more of the associated listed items.

[0025] It will be understood that, although the terms first, second, etc. may be used herein to describe various elements, components, layers, and/or sections, these elements, components, layers, and/or sections should not be limited by these to terms. These terms are only used to distinguish one element, component or section from another element, component, or section. Thus, a first element, component, layer, or section discussed below could be termed a second element, component, layer, or section without departing from the teachings of inventive concepts.

[0026] Unless otherwise defined, all terms (including technical and scientific terms) used herein have the same meaning as commonly understood by one of ordinary skill in the art to which inventive concepts belong. It will be further understood that terms, such as those defined in commonly used dictionaries, should be interpreted as having a meaning that is consistent with their meaning in the context of the relevant art and will not be interpreted in an idealized or overly formal sense unless expressly so defined herein.

[0027] In addition, when terms used in this specification are not specifically defined, all the terms used in this specification (including technical and scientific terms) can be understood by those skilled in the art. Further, when general terms defined in the dictionaries are not specifically defined, the terms will have the normal meaning in the art.

[0028] The terminology used herein is for the purpose of describing particular embodiments only and is not intended to be limiting of example embodiments. As used herein, the singular forms "a," "an" and "the" are intended to include the plural forms as well, unless the context clearly indicates otherwise. It will be further understood that the terms "comprises" and/or "comprising," when used in this specification, specify the presence of stated features, integers, steps, operations, elements, layers, and/or components, but do not preclude the presence or addition of one or more other features, integers, steps, operations, elements, layers, components, and/or groups thereof.

[0029] In the drawings, the illustrated features may be changed due to, for example, the manufacturing technology and/or tolerance. Accordingly, it should be understood that example embodiments of inventive concepts are not limited to the drawings but include modifications of the features of elements caused due to, for example, the manufacture.

[0030] Hereinafter, methods of manufacturing three-dimensional semiconductor devices according to embodiments of inventive concepts will be described in conjunction with the accompanying drawings.

[0031] FIGS. **1**A, **2**A, **3**A, **4**A, **5**A, and **6**A are perspective views illustrating sequential operations of manufacturing a three-dimensional semiconductor device according to first embodiments of inventive concepts. FIGS. **1**B, **2**B, **3**B, **4**B, **5**B, and **6**B are cross sectional views illustrating sequential operations of manufacturing three-dimensional semiconductor devices according to first embodiments of inventive concepts along an x-z plane of FIGS. **1**A, **2**A, **3**A, **4**A, **5**A, and **6**A. FIGS. **1**C, **2**C, **3**C, **4**C, **5**C, and **6**C are cross sectional views illustrating sequential operations of manufacturing the three-dimensional semiconductor device according to first embodiments of inventive concepts along a y-z plane of FIGS. **1**A, **2**A, **3**A, **4**A, **5**A, and **6**A. FIG. **7** is a cross sectional view illustrating a contact structure of the three-dimensional semiconductor device according to first embodiments of inventive concepts;

[0032] A three-dimensional semiconductor device according to some embodiments of inventive concepts may include a cell array region CAR (or a wiring region) and contact regions UWCTR and LWCTR. Memory cells with a three-

dimensional structure are formed in the cell array region CAR. In the contact regions UWCTR and LWCTR, contact plugs are formed to connect the memory cells to peripheral circuits. The contact regions UWCTR and LWCTR of the three-dimensional semiconductor device according to embodiments of inventive concepts include a lower word line contact region LWCTR and an upper word line contact region LWCTR. The upper word line contact region UWCTR is disposed closer to the cell array region CAR than the lower word line contact region LWCTR.

[0033] Referring to FIGS. **1**A, **1**B, and **1**C, a lower thin film structure **100** is formed on a substrate **10**. The lower thin film structure **100** may include a plurality of lower inter-layer insulating layers **120** and a plurality of lower sacrificial layers **130**. The lower inter-layer insulating layers **120** and the lower sacrificial layers **130** may be laminated alternately and repeatedly.

[0034] The substrate **10** may be formed of a material (for example, a silicon wafer) with semiconductor characteristics. According to other embodiments, the substrate **10** may be formed of an insulating material (for example, glass) or a semiconductor or a conductive member covered with an insulating material.

[0035] The lower inter-layer insulating layers **120** and the lower sacrificial layers **130** may be formed of different materials having etching selectivity with respect to each other. For example, each lower inter-layer insulating layer **120** may be formed of at least one of a silicon oxide layer and a silicon nitride layer. Each lower sacrificial layer **130** may be formed of a material selected from a silicon layer, a silicon oxide layer, a silicon carbide, and/or a silicon nitride layer and different from that of the lower inter-layer insulating layer **120**. Other embodiments of inventive concepts may further include forming an impurity region (not illustrated) in the substrate **10**, before the lower thin film structure **100** is formed.

[0036] Subsequently, by patterning the lower thin film structure **100**, a contact region with a terraced shape is formed at the lower word line contact region LWCTR.

[0037] Specifically, a sacrificial mask pattern (not illustrated) may be formed on the lower thin film structure **100**, and then the contact region in terraced shape may be formed by etching the lower thin film structure **100**. Therefore, as the lower sacrificial layers **130** are more distant from the substrate **10**, the distance between the cell array region CAR and one-sidewalls of the lower sacrificial layers **130** may become shorter. That is, the areas of the lower sacrificial layers **130** may be decreased, as the lower sacrificial layers **130** are more distant from the substrate **10**.

[0038] The sacrificial mask pattern (not illustrated) may be formed of one or more materials having etching selectivity with respect to to the materials of the lower inter-layer insulating layers **120** and the lower sacrificial layers **130**. According to some embodiments of inventive concepts, the sacrificial mask pattern may be formed of one of organic materials and/or photoresist materials. The thickness of the sacrificial mask pattern may be thicker than the area of the contact regions LWCTR and UWCTR.

[0039] The patterning of the lower thin film structure **100** may include exhaustive etching performed using the sacrificial mask pattern as an exhaustive etching mask. Specifically, the exhaustive etching may include a plurality of lower patterning. The lower patterning may include horizontal etching and vertical etching.

[0040] The horizontal etching may be performed to gradually reduce the area occupied by the sacrificial mask pattern and may include etching the sidewall of the sacrificial mask pattern horizontally. The horizontal etching may newly expose a part of the upper surface of the lower thin film structure **100** covered with the sacrificial mask pattern in the previous lower patterning, by expanding the region exposed by the sacrificial mask pattern horizontally. That is, exposed areas of the lower inter-layer insulating layers **120** and the lower sacrificial layers **130** may be expanded by performing the lower patterning repeatedly. The horizontal etching may be performed either by isotropic dry etching or by wet etching. In the horizontal etching, the upper surface of the sacrificial mask pattern may be etched together with the sidewall of the sacrificial mask pattern by performing slimming. The width and thickness of the sacrificial mask pattern may be reduced by repeating the lower patterning.

[0041] The vertical etching may include etching the lower inter-layer insulating layers **120** and the lower sacrificial layers **130** using the sacrificial mask pattern as an etching mask.

[0042] The cumulative number of lower patterning performed on the lower thin film structure **100** depends on the number of thin films laminated. Based on the difference in the cumulative number of lower patterning, as illustrated in FIGS. **1**A through **1**C, the lower thin film structure **100** may be formed to have the contact region with the terraced shape in the lower word line contact region LWCTR. That is, the end portions of the lower inter-layer insulating layers **120** and the lower sacrificial layers **130** may be located in the lower word line contact region LWCTR. By patterning the lower thin film structure **100** repeatedly, the end portions of the lower sacrificial layers **130** may be sequentially exposed. Therefore, the areas of the lower inter-layer insulating layers **120** and the lower sacrificial layers **130** may be decreased vertically from the substrate **10**.

[0043] Subsequently, the sacrificial mask pattern may be removed, and then a lower insulating layer **160** may be formed so as to cover the lower thin film structure **100** in the lower word line contact region LWCTR. The lower insulating layer **160** may be formed of an insulating material having etching selectivity with respect to the lower sacrificial layers **130**. For example, the lower insulating layer **160** may be formed of a silicon oxide material.

[0044] Referring to FIGS. **2**A, **2**B, and **2**C, lower through-holes **140** are formed in the cell array region CAR to penetrate the lower thin film structure **100**, and then lower semiconductor patterns **150** are formed in the lower through-holes **140**.

[0045] The lower through-holes **140** are arranged two-dimensionally to expose the upper surface of the substrate **10** or an impurity region. As a consequence, lower semiconductor patterns **150** may be arranged two-dimensionally to come into direct contact with the upper surface of the substrate **10** or a lower conductive pattern.

[0046] Forming the lower through-holes **140** may include forming a mask pattern defining the positions of the lower through-holes **140** on the lower thin film structure **100** and etching the lower thin film structure **100** using the mask pattern as an etching mask. The etching of the lower thin film structure **100** may be performed by anisotropic etching. However, since the lower thin film structure **100** includes the plurality of layers, the lower through-holes **140** may be formed in a downwardly tapered shape, as illustrated. That is, the lower through-holes **140** may each have a width narrower in the lower portion than in the upper portion.

[0047] The forming of the lower semiconductor patterns **150** may include forming a lower semiconductor layer with which the lower through-holes **140** are filled and a node isolating step of etching the lower semiconductor layer to expose the upper surface of the lower thin film structure **100**. The semiconductor layer forming step may be performed by an epitaxial technique and/or chemical vapor deposition. The node isolating step may be performed by chemical-mechanical planarization and an etch-back technique.

[0048] The lower semiconductor patterns **150** may be formed of one of semiconductor materials by an epitaxial technique and/or chemical vapor deposition. The crystalline structure may be one of a multi-crystalline structure, a single-crystalline structure, and an amorphous structure. The lower semiconductor patterns **150** may be formed in a cylindrical shape completely filling the lower through-holes **140** or in a hollow cylindrical shape substantially conformally covering the inner sidewalls of the lower through-holes **140** as shown in FIGS. **2**B and **2**C.

[0049] When the lower through-holes **140** are formed in the downwardly tapered shape, as described above, the lower semiconductor patterns **150** also have a downwardly tapered shape that is formed using the lower through-holes **140** as molds. That is, the lower semiconductor patterns **150** may each be formed so as to have a width narrower in the lower portion than in the upper portion, as illustrated. On the other hand, the horizontal cross-sections of the lower through-holes **140** and the lower semiconductor pattern **150** may be circular or oval.

[0050] When the lower semiconductor patterns **150** are formed in the hollow cylindrical shape, as illustrated in FIGS. **2**A through **2**C, buried patterns **155** may be formed to fill the insides of the lower semiconductor patterns **150**. The buried patterns **155** may contain at least one of insulating materials. For example, the buried patterns **155** may be formed of a silicon oxide layer or insulating materials by an SOG technique.

[0051] A contact pad **157** may be formed on the upper regions of the buried pattern **155** and the lower semiconductor pattern **150**. The contact pad **157** may be an impurity region doped with impurities of a conductive type different from that of the lower semiconductor pattern **150**. The contact pad **157** may be a conductive layer that may come into ohmic contact with the lower semiconductor pattern **150**.

[0052] After the lower semiconductor patterns **150** are formed, hydrogen annealing may be further performed to process the product, in which the lower semiconductor patterns **150** are formed, under a gas atmosphere containing hydrogen and/or heavy hydrogen. The hydrogen annealing may cure crystal defects existing in the lower semiconductor patterns **150**.

[0053] According to first embodiments of inventive concepts, the lower thin film structure **100** is patterned with the terraced shape before the lower semiconductor patterns **150** are formed. However, according to other embodiments, the lower thin film structure **100** may be patterned with the terraced shape in the lower word line contact region LWCTR, after the lower semiconductor patterns **150** are formed.

[0054] Subsequently, contact openings **162** are formed in the lower insulating layer **160**, as illustrated in FIGS. **2**A, **2**B, and **2**C.

[0055] Specifically, the forming of the contact openings **162** may include forming a mask pattern (not illustrated) on the lower insulating layer **160** of the lower word line contact region LWCTR to define positions of the contact openings **162** and etching the lower insulating layer **160** using the mask pattern as an etching mask.

[0056] The line-shaped mask pattern may be formed to define the positions of the contact openings **162**. In this way, the contact openings **162** may have a line-shaped plane.

[0057] The etching of the lower insulating layer **160** may be performed by anisotropic etching. Therefore, the contact opening **162** may expose the upper surface of the lower sacrificial layer **130** in the lower word line contact region LWCTR. The contact openings **162** may have a width narrower in the lower portion than in the upper portion. In the patterning of the lower insulating layer **160**, an etching depth of the lower insulating layer **160** in the anisotropic etching is thinner than the height of the lower thin structure **100**.

[0058] On the other hand, since the lower thin film structure **100** has the terraced shape in the lower word line contact region LWCTR, the respective contact openings **162** are formed so as to expose the lower sacrificial layers **130** located at different heights from the substrate **10**. That is, the contact openings **162** different in the etching depth are formed in the lower word line contact region LWCTR. In order to form these contact openings **162**, the lower insulating layer **160** may be patterned as an additional step. That is, the lower sacrificial layers **130** formed at the different heights may be exposed by the contact openings **162** formed simultaneously in the same step.

[0059] The contact openings **162** may each expose the upper surface of the lower sacrificial layer **130** at the position spaced from one-sidewall of the lower sacrificial layer **130** at a predetermined distance. Since the lower thin film structure **100** has the laminated configuration in which the adjacent one-sidewalls of the lower sacrificial layers **130** are spaced from each other at a predetermined distance, one contact opening **162** may be formed between the one-sidewalls of the lower sacrificial layers **130** vertically adjacent to each other.

[0060] Since the lower contact openings **162** are formed by patterning the lower insulating layer **160**, a distance d_2 between the lower contact openings **162** may be larger than a distance d_1 between the lower sacrificial layers **130**. The distance between the lower contact openings **162** may be different depending on the distance between the one-sidewalls of the lower sacrificial layers **130** vertically adjacent to each other.

[0061] Referring to FIGS. **3**A, **3**B, and **3**C, lower sacrificial contact patterns **170** are formed by burying a sacrificial material in the contact openings **162**. The burying of the sacrificial material in the contact openings **162** includes depositing the same material as that of the lower sacrificial layers included in the lower thin film structure **100** and performing planarization until the upper portion of the lower insulating layer **160** is exposed. In this way, the lower sacrificial contact patterns **170** may be formed in the lower word line contact region LWCTR so as to have the line-shaped horizontal configuration and have depths different from each other. That is, the lower sacrificial contact patterns **170** may be formed to correspond to the lower sacrificial layers **130** laminated in the terraced shape. The thicknesses of the lower sacrificial contact patterns **170** are decreased as the lower sacrificial contact patterns **170** are closer to the cell array region CAR.

[0062] Subsequently, an upper thin film structure **200** and upper semiconductor patterns **250** are formed on the product in which the lower semiconductor patterns **150** and the lower sacrificial contact patterns **170** are formed.

[0063] The upper thin film structure **200** may include a plurality of upper inter-layer insulating layers **220** and a plurality of upper sacrificial layers **230**. The upper thin film structure **200** may be formed in the same way as that of the lower thin film structure **100**. That is, the upper inter-layer insulating layers **220** and the upper sacrificial layers **230** may be formed in the same way as that of the lower inter-layer insulating layers **120** and the lower sacrificial layers **130** in terms of at least one of the material, the thickness, and the forming methods. According to a modified example, however, the upper inter-layer insulating layers **220** and the upper sacrificial layers **230** may be different from the lower inter-layer insulating layers **120** and the lower sacrificial layers **130** in terms of at least one of the material, the thickness, and the forming methods. The upper thin film structure **200** may be different from the lower thin film structure **100** in the number of thin films of the structure.

[0064] After the upper thin film structure **200** is formed, the upper thin film structure **200** is patterned to form a contact region with a terraced shape in an upper word line contact region UWCTR.

[0065] Specifically, a sacrificial mask pattern (not illustrated) is formed on the upper thin film structure **200**, and then the upper thin film structure **200** is patterned to form the contact region with the terraced shape.

[0066] As described with reference to FIGS. **1**A through **1**C, the patterning of the upper thin film structure **200** may include performing exhaustive etching by using the sacrificial mask pattern as an exhaustive etching mask. Specifically, the exhaustive etching includes a plurality of lower patterning. The lower patterning may include horizontal etching and vertical etching,

[0067] The horizontal etching may be performed to gradually reduce the area occupied by the sacrificial mask pattern and may include etching the sidewall of the sacrificial mask pattern horizontally. The vertical etching may include etching the upper inter-layer insulating layers **220** and the upper sacrificial layers **230** using the sacrificial mask pattern as an etching mask.

[0068] The cumulative number of patterning on the upper thin film structure **200** depends on the number of thin films laminated. As illustrated in FIGS. **3**A through **3**C, the upper thin film structure **200** may have a terraced shape in the upper word line contact region UWCTR. By patterning the upper thin film structure **200** repeatedly, the surfaces of the lower insulating layer **160** and the lower sacrificial contact patterns **170** may be exposed.

[0069] According to other embodiments, the upper thin film structure **200** may be patterned and the contact region with the terraced shape may be formed in the upper word line contact region UWCTR, after the upper semiconductor patterns **250** are formed in the upper thin film structure **200**.

[0070] Subsequently, after the upper thin film structure **200** is patterned, an upper insulating layer **260** is formed to cover the upper thin film structure **200** in the upper word line contact region UWCTR and the lower word line contact region LWCTR.

[0071] The upper semiconductor patterns **250** may be formed by patterning using a same photo mask pattern as that of the lower semiconductor patterns **150** as an etching mask. Specifically, upper through-holes **240** may be formed above the lower through-holes **140**, respectively, to define the positions of the upper semiconductor patterns **250**. The upper semiconductor patterns **250** may be aligned and laminated on the lower semiconductor patterns **150**.

[0072] The upper semiconductor patterns **250** may be formed in the same method used to form lower semiconductor patterns **150**. Specifically, the upper semiconductor patterns **250** may be formed in the semiconductor layer forming step and the node isolating step described with reference to FIGS. **2**A through **2**C. Therefore, the upper semiconductor pattern **250** may be the same as the lower semiconductor pattern **150** in at least one of shape, material, and/or crystalline structure. For example, as illustrated, the upper semiconductor patterns **250** may also be formed in the downwardly tapered shape. In this case, the area of the bottom surface of the upper semiconductor pattern **250** may be larger than that of the upper surface of the lower semiconductor pattern **150**.

[0073] According to a modification of the inventive concept, at least one intermediate thin film structure and intermediate semiconductor patterns may be formed, before the upper thin film structure **200** and the upper semiconductor patterns **250** are formed. The intermediate thin film structure and the intermediate semiconductor patterns may be formed in the same way as the method of forming one of the lower thin film structure **100** and the upper thin film structure **200** and at least one of the lower semiconductor pattern **150** and the upper semiconductor pattern **250**, or a modified method.

[0074] Referring to FIGS. **4**A, **4**B, and **4**C, trenches **300** are formed between the upper semiconductor patterns **250** so as to penetrate the lower thin film structure **100** and the upper thin film structure **200**. The trenches **300** may be formed to be spaced from the lower semiconductor patterns **150** and the upper semiconductor patterns **250**. The trenches **300** expose the sidewalls of the lower sacrificial layers **130**, the upper sacrificial layers **230**, the lower inter-layer insulating layers **120**, and the upper inter-layer insulating layers **220**.

[0075] The trenches **300** may intersect the cell array region CAR, the upper word line contact region UWCTR, and the lower word line contact region LWCTR. In this case, the lower thin film structure **100** and the upper thin film structure **200** may be divided into at least two configurations. The trenches **300** may intersect the lower sacrificial contact patterns **170** with a line-shaped plane. That is, the line-shaped lower sacrificial contact patterns **170** may be patterned, when the trenches **300** are formed. Therefore, the lower sacrificial contact patterns **170** may have a horizontal cross-section of a rectangular shape. The sidewalls of the lower sacrificial contact patterns **170** may be exposed.

[0076] The trenches **300** may be formed by one-time patterning to penetrate the plurality of thin film structures (for example, the lower thin film structure **100** and the upper thin film structure **200**) formed by at least two distinct processes. For example, as described above, the step may be further performed to form the intermediate thin film structure, the through-holes penetrating the intermediate thin film structure, and the semiconductor patterns between the lower thin film structure **100** and the upper thin film structure **200**.

[0077] When viewed from the vertical cross-section, the width of the upper portion (which is a portion adjacent to the upper surface of the upper thin film structure **200**) of the trench **300** may be broader than the width of the lower portion (which is a portion adjacent to the substrate **10**) of the trench **300**. That is, according to the above-described embodiment, the trench **300** may be formed so as to have the downwardly tapered shape.

[0078] When viewed from horizontal plane, the line-shaped trenches **300** may be formed. Specifically, the trenches **300** may be formed to have a length longer than the sum of the widths of the plurality of upper semiconductor patterns **250** and a width shorter than the sum thereof.

[0079] According to a modified example of the inventive concept, the trenches **300** may penetrate all of the thin films of the upper thin film structure **200** and some of the thin films of the lower thin film structure **100**. For example, the trenches **300** may not penetrate the lowermost thin film of the lower thin film structure **100** to expose the upper surface of the lowermost thin film.

[0080] Subsequently, upper recess regions **352**, lower recess regions **351**, and contact recess regions **353** are formed by selectively removing the upper sacrificial layers **230**, the lower sacrificial layers **130**, and the lower sacrificial contact patterns **170** of which the sidewalls are exposed by the trenches **300**.

[0081] The upper recess region **352** and the lower recess region **351** may be gap regions extending horizontally from the trench **300** to spaces between upper inter-layer insulating layers **220** and the lower inter-layer insulating layers **120**, respectively. The upper recess region **352** and the lower recess region **351** may be formed so as to expose the sidewalls of the upper semiconductor pattern **250** and the lower semiconductor pattern **150**.

[0082] The contact recess regions **353** may be empty spaces in which the lower sacrificial contact patterns **170** are removed in the lower insulating layer **160**. The contact recess regions **353** may be connected to the lower recess regions **351**.

[0083] The forming of the upper recess regions **352**, the lower recess regions **351**, and the contact recess regions **353** may include isotropic etching performed on the upper sacrificial layers **230** and the lower sacrificial layers **130** using an etching recipe having etching selectivity with respect to the upper inter-layer insulating layers **220** and the lower inter-layer insulating layers **120**. Since the lower sacrificial contact patterns **170** come into contact with the lower sacrificial layers **130** and are formed of the same material, the lower sacrificial contact patterns **170** may be removed together upon removing the upper sacrificial layers **230** and the lower sacrificial layers **130**.

[0084] For example, when the upper sacrificial layers **230**, the lower sacrificial layers **130**, and the lower sacrificial contact patterns **170** are silicon nitride layers and the upper inter-layer insulating layers **220** and the lower inter-layer insulating layers **120** are silicon oxide layers, the etching may be performed using an etchant containing phosphoric acid. According to the embodiments of the inventive concept, the upper recess regions **352** and the lower recess regions **351** may substantially be formed with the contact recess regions **353** at the same time.

[0085] Referring to FIGS. **5**A, **5**B, and **5**C, an information storing layer **410** and a conductive layer **420** are sequentially formed in the upper recess regions **352**, the lower recess regions **351**, and the contact recess regions **353**.

[0086] The information storing layer **410** may be formed using a deposition technique (for example, chemical vapor deposition and/or atomic layer deposition) capable of providing good step coverage. The information storing layer **410** may be formed to have a thickness thinner than the half of the thickness of the upper recess region **352** and the lower recess region **351**. In this way, the information storing layer **410** may substantially be formed to conformally cover the product in which the upper recess regions **352**, the lower recess regions **351**, and the contact recess regions **353** are formed.

[0087] More specifically, the information storing layer **410** may be formed on the surface of the insulating layers exposed to the upper recess regions **352**, the lower recess regions **351**, and the contact recess regions **353**. The information storing layer **410** may successively extend from the lower recess regions **351** to the contact recess regions **353**. Moreover, the information storing layer **410** may be formed to wrap around the circumferences of the lower semiconductor patterns **150** and the upper semiconductor patterns **250**.

[0088] According to some embodiments of inventive concepts for a flash memory, the information storing layer **410** may include a charge storing layer. For example, the information storing layer **410** may include one of a trap insulating layer and an insulating layer with a floating gate electrode or conductive nano dots. According to an embodiment of the inventive concept, the information storing layer **410** may further include a tunnel insulating layer and a blocking insulating layer.

[0089] The conductive layer **420** may be formed to fill the trenches **300**, the upper recess regions **352**, the lower recess regions **351**, and the contact recess regions **353** covered with the information storing layer **410**. The conductive layer **420** may contain at least one of a doped polysilicon, metal layers, metal nitride layers, and/or metal silicides.

[0090] On the other hand, since inventive concepts are applied to memory types other than flash memory devices, the information storing layer **410** and the conductive layer **420** may be modified in various forms in terms of materials and structures.

[0091] Referring to FIGS. **6**A, **6**B, and **6**C, by removing the conductive layer **420** in the trench **300**, lower conductive patterns **430** (**431** to **436**) and upper conductive patterns **440** (**441** to **446**) are formed in the upper recess regions **352**, and the lower recess regions **351** and buried contact plugs **450** are formed in the contact recess regions **353**. The lower conductive patterns **430**, the upper conductive patterns **440**, and the buried contact plugs **450** are formed of the same conductive material, since they are formed simultaneously.

[0092] The removing of the conductive layer **420** in the trench **300** may include anisotropically etching the conductive layer **420** using a mask pattern (not illustrated) additionally formed in or above the uppermost upper inter-layer insulating layer **220** of the upper thin film structure **200** as an etching mask. When the conductive layer **420** in the trench **300** is removed, the conductive layer **420** is vertically divided to form the lower conductive patterns **430**, the upper conductive patterns **440**, and the buried contact plugs **450**.

[0093] That is, the lower conductive patterns **430** and the upper conductive patterns **440** may be formed locally in the lower recess regions **351** and the upper recess regions **352**, respectively, and may form a lower wiring structure **430** and an upper wiring structure **440**, respectively. Moreover, the buried contact plugs **450** are locally formed in the contact recess region **353** to be connected to the lower conductive patterns **430**, respectively. The buried contact plugs **450** formed in the contact recess region **353** may have a horizontal configuration of a rectangular shape and the sidewalls thereof may be exposed to the trench **300**.

[0094] The buried contact plugs **450** may be connected one-to-one to respective lower conductive patterns **430** and may be formed at different heights depending on the layers in which the lower conductive patterns **430** are disposed. Moreover, since the buried contact plugs **450** are formed simultaneously with the lower conductive patterns **430**, no boundary

is formed between the buried contact plugs **450** and the lower conductive patterns **430**. That is, the buried contact plugs **450** and the lower conductive patterns **430** may form one conductive pattern formed of the same material.

[0095] Subsequently, an isolation insulating pattern **460** is formed to fill the trench **300**. The forming of the isolation insulating pattern **460** may include filling the trench **300**, of which the conductive layer is removed, with at least one insulating material. Therefore, the sidewalls of the lower conductive patterns **430**, the upper conductive patterns **440**, and the buried contact plugs **450** may come into contact with the isolation insulating pattern **460**. According to some embodiments of inventive concepts, the isolation insulating pattern **460** may be at least one of a silicon oxide layer, a silicon nitride layer, and/or a silicon oxynitride.

[0096] After the isolation insulating pattern **246** is formed, as illustrated in FIGS. **6**A through **6**C, upper contact plugs **510** are formed to be connected to the upper conductive patterns **440**, and lower contact plugs **520** are formed to be connected to the buried contact plugs **450**.

[0097] The forming of the upper contact plugs **510** and the lower contact plugs **520** includes forming contact holes **261** and **262** in the upper insulating layer **260** and burying a conductive material in contact holes **261** and **262**.

[0098] Specifically, the forming of the contact holes **261** and **262** may include: forming a mask pattern (not illustrated) defining positions of the contact holes **261** and **262** on the upper insulating layer **260** covering the lower word line contact region LWCTR and the upper word line contact region UWCTR; and etching the upper insulating layer **260** using the mask pattern as an etching mask.

[0099] forming the contact holes **261** and **262** may include forming the lower contact holes **262** to expose respective buried contact plugs **450** and forming the upper contact holes **261** to expose respective upper conductive patterns **440**.

[0100] Since the upper thin film structure **200** is formed to have the contact region with the terraced shape in the upper word line contact region UWCTR, the patterning of the upper insulating layer **260** may be repeated to expose the upper conductive patterns **440** formed at different distances from the substrate **10**. The contact holes formed simultaneously in the same patterning may expose the upper conductive patterns **440** formed at the same height.

[0101] The etching of the upper insulating layer **260** may be performed by anisotropic etching. In this case, the contact holes **261** and **262** may be formed in downwardly tapered shape. That is, the contact holds **261** and **262** may be formed to have a width narrower in the lower portion than in the upper portion.

[0102] In the anisotropic etching, the portions of information storing layer **410** formed on the buried contact plugs **450** and the upper conductive patterns **440** are removed locally to expose the upper conducive patterns **440** and the buried contact plugs **450** by over etch.

[0103] Subsequently, the upper contact plugs **510** and the lower contact plugs **520** may be formed by burying a conductive material in the contact holes formed in the upper insulating layer **260**. That is, in the upper word line contact region UWCTR, the upper contact plugs **510** may be formed to be connected to the upper conductive patterns **440**. In the lower word line contact region LWCTR, the lower contact plugs **520** may be formed to be connected to the buried conductive plugs **450**. In this way, the upper contact plugs **510** and the lower contact plugs **520** may be formed in a cylindrical shape in the contact holes.

[0104] After the upper contact plugs **510** and the lower contact plugs **520** are formed, bit lines may be formed to be connected to the upper semiconductor pattern **250**, and global word lines GWL may be formed to be connected to the upper contact plugs **510** and the lower contact plugs **520**.

[0105] The bit lines may intersect the isolation insulating pattern **460** or the upper conductive patterns **430** and the upper conductive patterns **440**. The global word lines may be parallel to the bit lines. The global word lines electrically connect the upper contact plugs **510** and the lower contact plugs **520** connected to the conductive patterns formed at the same height. The bit lines and the global word lines may be connected electrically to the upper semiconductor patterns **250** and the contact plugs **510** and **520** by additional contact plugs.

[0106] Hereinafter, the three-dimensional semiconductor device manufactured according to first embodiments of inventive concepts will be described with reference to FIGS. **6** and **7**.

[0107] The three-dimensional semiconductor device includes the lower wiring structure **430** and the upper wiring structure **440** laminated on a substrate **10**. The lower wiring structure **430** includes the laminated lower conductive patterns **431** to **436**. The upper wiring structure **440** includes the laminated upper conductive patterns **441** to **446**.

[0108] The lower wiring structure **430** has a terraced structure in the lower word line contact region LWCTR. The upper wiring structure **440** has a terraced structure in the upper word line contact region UWCTR. That is, the areas of the conductive patterns may be reduced in order of the lower conductive patterns **431** to **436** and the upper conductive patterns **441** to **446** laminated on the substrate **10**. As the lower conductive patterns **431** to **436** and the upper conductive patterns **441** to **446** are more distant from the substrate **10**, the distance between the cell array region CAR and -sidewalls of the conductive patterns may be reduced.

[0109] In the cell array region CAR, the lower semiconductor patterns **150** are disposed to penetrate the lower wiring structure **430**, and the upper semiconductor patterns **250** are disposed to penetrate the upper wiring structure **440** and to be connected to the lower semiconductor patterns **150**.

[0110] In the lower word line contact region LWCTR, the end portions of the lower conductive patterns **430** are disposed, the buried contact plugs **450** are disposed to be electrically connected to the lower conductive patterns **430**, and the lower contact plugs **520** are disposed to come into direct contact with the upper surfaces of the buried contact plugs **450**. In the upper word line contact region UWCTR, the end portions of the upper conductive patterns **440** are disposed and the upper contact plugs **510** are disposed to be electrically connected to the upper conductive patterns **440**.

[0111] The information storing layer **410** is disposed between the lower and upper conductive patterns **430** and **440** and the lower and upper semiconductor patterns **150** and **250**. The information storing layer **410** may extend to the upper surfaces and the bottom surfaces of the lower conductive patterns **430** and the upper conductive patterns **440**. The information storing layer **410** covering the lower conductive patterns **430** may extend between the buried contact plug **450** and the lower insulating layer **160**.

[0112] Since the buried contact plugs **450** are formed simultaneously with the lower conductive patterns **430**, as described above, the buried contact plugs **450** may extend continuously from the lower conductive pattern **430**. That is, the lower conductive patterns **430** and the buried contact plugs **450** may be formed of the same conductive material. No boundary is formed between the lower conductive patterns **430** and the buried contact plugs **450**.

[0113] The buried contact plugs **450** may each be formed between sidewalls of the lower insulating layer **160** vertically adjacent to each other. Therefore, the lower conductive patterns **430** may protrude more than the buried contact plugs **450** and may each have a protrusion portion parallel to the substrate **10**. That is, the protrusion portion of the lower conductive pattern **430** is more distant from the cell array region CAR than the buried contact plug **450**.

[0114] The buried contact plugs **450** may have a substantial hexahedron shape. That is, the buried contact plugs **450** may have a horizontal cross-section of a substantially rectangular shape. In this case, the length of one of two sides defining the horizontal cross-section of the rectangular shape may substantially be the same as the width of the lower conductive pattern **430**. In the buried contact plugs **450**, a lower width W**2** may be less than a upper width W**1**. The thickness of the buried contact plugs **450** may decrease as the distance between the buried contact plugs **450** and the cell array region CAR is reduced. Distances between the buried contact plugs **450** may be greater than distances between the conductive patterns **431** to **436** and **441** to **446**.

[0115] Since the lower insulating layer **160** and the isolation insulating patterns **460** are formed around the circumferences of the buried contact plugs **450**, the adjacent buried contact plugs **450** are isolated electrically from each other. The information storing layer **410** may be formed on both sidewalls of the buried contact plugs **450** adjacent to the lower insulating layer **160**.

[0116] On the other hand, the upper contact plugs **510** disposed in the upper word line contact region UWCTR may have a substantially cylindrical shape. The lower contact plugs **520** connected to the buried contact plugs **450** may also have a substantially cylindrical shape. The upper contact plugs **510** and the lower contact plugs **520** may have a width that decreases with depth into upper insulating layer **260**. A minimum width of each lower contact plug **520** may be smaller than an upper width of the respective buried contact plug **450** disposed below the lower contact plug **520**. Since the information storing layer **410** is formed to cover the upper surfaces of the upper conductive patterns **440** and the upper surfaces of the buried contact plugs **450**, the upper contact plugs **510** and the lower contact plugs **520** may penetrate the information storing layer **410** to come into contact with upper surfaces of upper conductive patterns **440** and upper surfaces of buried contact plugs **450**.

[0117] FIGS. **8** and **9** are diagrams illustrating a method of manufacturing a three-dimensional semiconductor device according to a modified example of first embodiments of inventive concepts.

[0118] Referring to FIG. **8**, supporting members **175** may be formed in the lower word line contact region LWCTR to support the lower thin film structure **100**, before or after the lower sacrificial contact patterns **170** are formed in first embodiments of inventive concepts.

[0119] The supporting members **175** are formed perpendicular to the substrate **10** and may be formed to penetrate the lower thin film structure **100** in the lower word line contact region LWCTR. One or more supporting members **175** may be formed and may be formed of a non-conductive material having etching selectivity with respect to the lower sacrificial layers **130** and the lower sacrificial contact patterns **170**. For example, the supporting members **175** may be formed of the same material as that of the lower inter-layer insulating layers **120** or the lower insulating layer **160**. The supporting members **175** may be formed together with the lower semiconductor patterns **150** so as to be formed of a semiconductor material.

[0120] The supporting members **175** may be formed between the lower sacrificial contact patterns **170** to penetrate the lower thin film structure **100**. The supporting members **175** may prevent and/or reduce collapse of the lower inter-layer insulating layers **120** and the lower insulating layers **160** in the subsequent process of removing the lower sacrificial layers **130**.

[0121] According to the modified example, since the sacrificial contact pattern **170** and the supporting member **175** are disposed between the one-sidewalls of the lower sacrificial layers **130** vertically adjacent to each other, the distance d_2 between the sacrificial contact patterns **170** may be larger than that of first embodiments of inventive concepts.

[0122] Referring to FIG. **9**, when the supporting members **175** are formed in the lower word line contact region LWCTR and the upper word line contact region UWCTR, the supporting members **175** may remain when forming the recess regions **351** to **353** due to the fact that the supporting members **175** have the etching selectivity with respect to the lower sacrificial layers **130**. That is, when the recess regions **351** to **353** are formed, the supporting members **175** may penetrate the recess regions **351**. The supporting members **175** may maintain distance between the lower inter-layer insulating layers **120**. That is, the supporting members **175** may prevent and/or reduce collapse of the lower thin film structure **100**, the upper thin film structure **200**, the lower insulating layer **160**, and the upper insulating layer **260**.

[0123] Referring to FIGS. **10**A, **11**A, and **12**A and FIGS. **10**B, **11**B, and **12**B, a three-dimensional semiconductor device will be described according to second embodiments of the inventive concepts.

[0124] FIGS. **10**A, **11**A, and **12**A are diagrams sequentially illustrating a method of manufacturing the three-dimensional semiconductor device according to second embodiments of inventive concepts. FIGS. **10**B, **11**B, and **12**B are diagrams sequentially illustrating the method of manufacturing the three-dimensional semiconductor device according to second embodiments of inventive concepts taken along cross sections of a y-z plane of FIGS. **10**A, **11**A, and **12**A.

[0125] The method of manufacturing the three-dimensional semiconductor device according to second embodiments of inventive concepts is different from the method according to first embodiments of inventive concepts, in that the contact plugs connected to the upper conductive patterns are also formed together with the upper conductive patterns. Repeated technical features from first embodiments of inventive concepts are omitted for conciseness. The method of manufacturing the three-dimensional semiconductor device according to other embodiments of inventive concepts will be described with reference to FIGS. **4**A, **4**B, and **4**C.

[0126] Referring to FIGS. **10**A and **10**B, upper semiconductor patterns **250** are formed in the upper thin film structure **200**, and then, first upper sacrificial contact patterns **270** and second upper sacrificial contact patterns **280** are formed in the upper word line contact regions UWCTR and the lower word line contact regions LWCTR, respectively.

[0127] The forming of the first upper sacrificial contact patterns **270** and the second upper sacrificial contact patterns **280** may include: forming upper contact openings **261** and **262** in the upper insulating layers **260**; and forming a sacrificial material in the upper contact openings **261** and **262**. The upper contact openings **261** and **262** may include first upper contact openings **261** formed in the upper word line contact region UWCTR and second upper contact openings **262** formed in the lower word line contact region LWCTR.

[0128] Specifically, the forming of the upper contact openings **261** and **262** may include: forming a mask pattern defining the positions of the upper contact openings **261** and **262** on the upper insulating layer **260**; and etching the upper insulating layer **260** using the mask pattern as an etching mask.

[0129] In forming the mask pattern defining the positions of the upper contact openings **261** and **262**, a line-shaped mask pattern may be formed. That is, the upper contact openings **261** and **262** may define a line-shaped plane. The etching of the upper insulating layer **260** may be performed by anisotropic etching. Therefore, the upper contact openings **261** and **262** may each have a width that is narrower in the lower portion than in the upper portion.

[0130] Since the upper thin film structure **200** has the terraced shape in the upper word line contact region UWCTR, the first upper contact openings **261** are formed to expose the upper sacrificial layers **230** located at different heights from the substrate **10**. Patterning the upper insulating layer **260** repeatedly may be performed to form the upper thin film structure **200** in the terraced shape. That is, the first upper contact openings **261** different from each other in the etching depth may be formed in the upper word line contact region UWCTR. Moreover, since the upper thin film structure **200** has a lamination structure in which the adjacent one-sidewalls of the upper sacrificial layers **230** are spaced from each other at a predetermined interval, one first upper contact opening **261** may be formed between the one-sidewalls of the upper sacrificial layers **130** vertically adjacent to each other.

[0131] The second upper contact openings **262** may expose the line-shaped upper surfaces of the lower sacrificial contact patterns **170**.

[0132] Subsequently, the first upper sacrificial contact patterns **270** and the second upper sacrificial contact patterns **280** are formed by burying the first upper contact openings **261** and the second upper contact openings **262** with a sacrificial material, respectively. The first upper sacrificial contact patterns **270** and the second upper sacrificial contact patterns **280** may be formed by performing deposition and planarization the same material as that of the upper sacrificial layers **230** included in the upper thin film structure **200**. Therefore, the first upper sacrificial contact patterns **270** may be formed in the upper word line contact region UWCTR so as to have a line-shaped horizontal configuration. The second upper sacrificial contact patterns **280** may be formed in the lower word line contact region LWCTR so as to have a line-shaped horizontal configuration.

[0133] The first upper sacrificial contact patterns **270** may be formed at different heights so as to be connected to the upper sacrificial layers **230**. That is, the first upper sacrificial contact patterns **270** may respectively be formed to correspond to the upper sacrificial layers **230** laminated in the terraced shape in the upper word line contact region UWCTR. In this way, the upper sacrificial layers **230** formed at the different heights may respectively be connected to the first upper sacrificial contact patterns **270** formed simultaneously with the upper sacrificial layers **230** by the same process.

[0134] In contrast, the second upper sacrificial contact patterns **280** may be formed at the same height so as to be connected to the lower sacrificial contact patterns **170**. The second upper sacrificial contact patterns **280** may be formed on the lower sacrificial contact patterns **170**, respectively.

[0135] According to other embodiments of inventive concepts, supporting members (not illustrated) may be formed in the upper word line contact region UWCTR and the lower word line contact region LWCTR to support the upper thin film structure **200**, before or after first upper sacrificial contact patterns **270** and the second upper sacrificial contact patterns **280** are formed in first embodiments of inventive concepts.

[0136] Referring to FIGS. **11**A and **11**B, trenches **300** are formed between the upper semiconductor patterns **250** so as to penetrate the lower thin film structure **100** and the upper thin film structure **200**, as described with reference to FIGS. **4**A through **4**C.

[0137] The trenches **300** may be spaced from the lower semiconductor patterns **150** and the upper semiconductor patterns **250** and may intersect the first upper sacrificial contact patterns **270** with the line-shaped plane, the second upper sacrificial contact patterns **280** with the line-shaped plane, and the lower sacrificial contact patterns **170**. As the trenches **300** are formed, the first upper sacrificial contact patterns **270** with the line-shaped plane may be patterned, the second upper sacrificial contact patterns **280** with the line-shaped plane may be patterned, and the lower sacrificial contact patterns **170** may be patterned. Therefore, the first upper sacrificial contact patterns **270**, the second upper sacrificial contact patterns **280**, and the lower sacrificial contact patterns **170** may have a horizontal cross-section of a rectangular shape, and the sidewalls thereof may be exposed.

[0138] Subsequently, as described with reference to FIGS. **4**A through **4**C, the recess regions **351** to **355** are formed by selectively removing the upper sacrificial layers **230** and the lower sacrificial layers **130** (of which the sidewalls are exposed by the trenches **300**), and the lower sacrificial contact patterns **170** and the upper sacrificial contact patterns **270** and **280**.

[0139] Specifically, the forming of the recess regions **351** to **355** may include isotropic etching performed on the upper sacrificial layers **230** and the lower sacrificial layers **130** using an etching recipe having etching selectivity with respect to the upper inter-layer insulating layers **220** and the lower inter-layer insulating layers **120**. The lower sacrificial contact patterns **170** and the upper sacrificial contact patterns **270** and **280** come into contact with the upper sacrificial layers **230** and the lower sacrificial layers **130**, respectively, and are formed of the same material. Therefore, the lower sacrificial contact patterns **170** and the upper sacrificial contact patterns **270** and **280** may be removed together, when the upper sacrificial layers **230** and the lower sacrificial layers **130** are removed.

[0140] Therefore, the lower recess regions **351** may be formed in the lower inter-layer insulating layer **120**. The upper recess regions **352** may be formed between the upper inter-layer insulating layers **220**. Simultaneously, the lower contact recess regions **353** and the second upper recess regions **355** may be formed in the lower word line contact region LWCTR, and the first upper recess regions **354** may be formed in the upper word line contact region UWCTR.

[0141] That is, according to embodiments of inventive concepts, there may be formed substantially simultaneously the upper recess regions **352**, the lower recess regions **351**, the lower contact recess regions **353**, the first upper recess regions **354**, and the second upper recess regions **355**. The first upper recess regions **354** may be connected continuously to the upper recess regions **352**. The lower contact recess regions **353** and the second upper recess regions **355** may be connected continuously to the lower recess regions **351**.

[0142] Referring to FIGS. **12**A and **12**B, the information storing layer **410** and the conductive layer **420** are formed in the recess regions **351** to **355** and the trench **300**, as described with reference to FIGS. **5**A, **5**B, and **5**C.

[0143] The information storing layer **410** may be formed using a deposition technique (for example, chemical vapor deposition or atomic layer deposition) capable of providing good step coverage. The information storing layer **410** may substantially be formed so as to conformally cover the product in which the upper recess regions **351** and **352** and the lower and upper contact recess regions **353** to **355** are formed.

[0144] More specifically, the information storing layer **410** may be formed on the surface of the lower insulating layers **160** and the upper insulating layers **260** exposed to the upper recess regions **352**, the lower recess regions **351**, and the lower and upper contact recess regions **353** to **355**. The information storing layer **410** may extend continuously from the lower recess regions **351** to the second upper contact recess regions **355** via the lower contact recess region **353**. Moreover, the information storing layer **410** may extend from the upper recess region **352** to the first upper contact recess region **354**.

[0145] Subsequently, a conductive layer is formed in the recess regions **351** to **355** where the information storing layer **410** is formed. The conductive layer may be formed using a deposition technique (for example, chemical vapor deposition or atomic layer deposition) capable of providing good step coverage. Therefore, a conductive material may fill the recess regions **351** to **355** where the information storing layer **410** is formed.

[0146] Subsequently, the conductive layer in the trench **300** is removed to form the lower conductive patterns **430**, the upper conductive patterns **440** and the contact plugs **450**, **510**, and **520** simultaneously. Subsequently, the isolation insulating pattern **460** may be formed by filling the trench **300**, from which the conductive layer is removed, with an insulating material.

[0147] Specifically, by anisotropically etching the conductive layer in the trench **300**, the lower conductive patterns **430** and the upper conductive patterns **440** may be formed in the cell array region CAR so as to be isolated vertically. By anisotropically etching the conductive layer in the trench **300**, the lower buried contact plugs **450** and the upper buried contact plugs **510** and **520** may be formed in the upper word line contact region UWCTR and the lower word line contact region LWCTR, respectively. The upper buried contact plugs **510** and **520** include first upper buried contact plugs **510** extending continuously from the upper conductive patterns **440** and second upper buried contact plugs **520** extending from the lower buried contact plugs **450**.

[0148] In the anisotropic etching of the conductive layer, the trench **300** may expose the sidewalls of the lower conductive patterns **430** and the upper conductive patterns **440** and the sidewalls of the lower buried contact plugs **450** and the upper buried contact plugs **510** and **520**.

[0149] Since the upper conductive pattern **440** and the first upper buried contact plug **510** are formed by the same processes, the lower conductive patterns **430** and the buried contact plugs **450** are formed of the same conductive material, and no boundary is formed between the upper conductive pattern **440** and the first upper buried contact plug **510**. Likewise, no boundary is formed between the lower conductive pattern **430** and the lower buried contact plug **450**. Moreover, since the lower buried contact plug **450** and the second upper buried contact plug **520** are formed simultaneously, no boundary is formed between the lower buried contact plug **450** and the second upper buried contact plug **520** either.

[0150] Specifically, as illustrated in FIG. **13**, the contact structure formed in the lower word line contact region LWCTR extends from the lower conductive pattern **430** and may include the lower buried contact plug **450** and the upper buried contact plug **520**. No boundary is formed between the lower buried contact plug **450** and the upper buried contact plug **520**.

[0151] As described with reference to FIGS. **10**A and **10**B, the contact structure includes the conductive layers locally formed in the contact recess regions **351** to **355** where the lower sacrificial contact patterns **170** and the upper sacrificial contact patterns **270** and **280** are formed so as to have the line-shaped horizontal cross-section and the lower sacrificial contact patterns **170** and the upper sacrificial contact patterns **270** and **280** are removed. Therefore, the lower buried contact plugs **450** and the upper buried contact plugs **520** may have at least four side surfaces. In the lower buried contact plugs **450** and the upper buried contact plugs **520**, a lower width may be narrower than an upper width. Therefore, the width may become sharply different in the boundary between the lower buried contact plug **450** and the upper buried contact plug **520**.

[0152] The lower buried contact plugs **450** and the upper buried contact plugs **520** may have a horizontal cross-section of a substantially rectangular shape. In this case, the length of one of two sides defining the horizontal cross-section of the rectangular shape may substantially be the same as the width of the lower conductive pattern **430**.

[0153] The information storing layer **410** may be formed on both sidewalls of the lower buried contact plugs **450** and the upper buried contact plugs **520** having the continuously extending configuration.

[0154] Hereinafter, referring to FIGS. **14** through **17**, a method of manufacturing a three-dimensional semiconductor device will be described according to third embodiments of inventive concepts. FIGS. **14** through **17** are cross-sectional views illustrating a method of manufacturing the three-dimensional semiconductor device according to third embodiments of inventive concepts. In FIGS. **14** through **17**, the same reference numerals are given to the same constituent elements as those in other embodiments of inventive concepts and the description thereof is omitted.

[0155] Referring to FIG. **14**, the lower thin film structure **100** is formed on the substrate **10**, and then lower semiconductor patterns **150** are formed in the lower through-holes **140** penetrating the lower thin film structure **100**, as described with reference to FIGS. **2**A through **2**C.

[0156] Subsequently, lower sacrificial patterns **165** are formed between the lower though-holes **140** to penetrate the lower thin film structure **100**. The lower sacrificial patterns **165** may be formed before the lower semiconductor patterns **150** are formed.

[0157] More specifically, the forming of the lower semiconductor patterns **150** may include: forming line-shaped preliminary lower trenches penetrating the lower thin film structure **100**; forming sacrificial layers filling the preliminary lower trenches; and etching the sacrificial layer until the upper surface of the lower thin film structure **100** is exposed.

[0158] The preliminary lower trenches may be formed by anisotropically etching the lower thin film structure **100**. In the preliminary lower trenches, a lower width may be narrower than an upper width.

[0159] The sacrificial layer filling the preliminary trenches may be formed of a material having etching selectivity with respect to the lower inter-layer insulating layers **120**. For example, the lower sacrificial patterns may be formed of the same material as that of the lower sacrificial layers **130** of the lower thin film structure **100**.

[0160] As described with reference to FIGS. **2**A through **2**C, the lower sacrificial contact patterns **170** may be formed in the lower word line contact region LWCTR, before or after the lower sacrificial patterns **165** are formed.

[0161] Referring to FIG. **15**, the upper thin film structure **200** is formed on the lower thin film structure **100** in which the lower semiconductor patterns **150** are formed. In the upper thin film structure **200**, the upper semiconductor patterns **250** may be formed in the upper through-holes **240** to penetrate the upper thin film structure **200**, as described with reference to FIGS. **3**A, **3**B, and **3**C.

[0162] Referring to FIG. **16**, an upper trench **310** may be formed in the upper thin film structure **200** to expose the upper surface of the lower sacrificial pattern **165**. In order to form the upper trench **310**, the upper thin film structure **200** may be subjected to anisotropic etching. Therefore, in the upper trench **310**, a lower width may be narrower than an upper width. The lower width of the trench **310** may be narrower than the upper width of the lower sacrificial pattern **165**.

[0163] Referring to FIG. **17**, a trench **320** is formed to penetrate the lower thin film structure **100** and the upper thin film structure **200** by removing the lower sacrificial patterns **165** exposed by the upper trench **310**.

[0164] The removing of the lower sacrificial patterns **165** may include anisotropically etching the line-shaped lower sacrificial patterns **165** using an etching recipe having etching selectivity with respect to the thin films of the lower thin film structure **100** and the upper thin film structure **200**.

[0165] The trench **320** formed in this way may expose the sidewalls of the lower inter-layer insulating layers **120**, the upper inter-layer insulating layers **220**, the lower sacrificial layers **130**, and the upper sacrificial layers **230**.

[0166] On the other hand, when the lower sacrificial patterns **165** are subjected to isotropic etching, as described with reference to FIGS. **4**A through **4**C, the lower sacrificial layers **130**, the upper sacrificial layers **230**, and the lower sacrificial contact patterns **170** may be subjected to isotropic etching simultaneously. In this way, the lower recess regions **351** and the upper recess regions **352** may be formed between the lower inter-layer insulating layers **120** and the upper inter-layer insulating layers **220**, respectively. Moreover, the contact recess regions **353** may be formed in the lower insulating layer **160**.

[0167] FIG. **18** is a diagram illustrating a method of manufacturing a three-dimensional semiconductor device according to a fourth embodiment of the inventive concept.

[0168] Referring to FIG. **18**, the three-dimensional semiconductor device includes the lower wiring structure **430** and the upper wiring structure **440** laminated on the substrate **10**. The lower wiring structure **430** includes the lower conductive patterns **431** to **436** laminated via the lower inter-layer insulating layers **120**. The upper wiring structure **440** includes the upper conductive patterns **441** to **446** laminated via the upper inter-layer insulating layers **220**. The lower conductive patterns **431** to **436** and the upper conductive patterns **441** to **446** may contain at least one of doped polysilicon, metal layers, metal nitride layers, and metal silicides. In this embodiment of the inventive concept, the lower wiring structure **430** and the upper wiring structure **440** may be formed by alternately laminating inter-layer insulating layers and conductive layers without a sacrificial layer.

[0169] The areas of the lower conductive patterns **431** to **436** and the upper conductive patterns **441** to **446** may be reduced, as these conductive patterns are more distant from the substrate **10**. The distance between the cell array region CAR and the sidewalls of the lower conductive patterns **431** to **436** and the upper conductive patterns **441** to **446** may be reduced, as these conductive patterns are more distant from the substrate **10**.

[0170] In this embodiment of the inventive concept, the lower conductive patterns **431** to **436** and the upper conductive patterns **441** to **446** may have a plate type configuration or a line-shaped configuration, as in first embodiments of the inventive concepts.

[0171] In the cell array region CAR, the lower semiconductor patterns **150** may be formed to penetrate the lower wiring structure **430** and the upper semiconductor patterns **250** may be formed to penetrate the upper wiring structure **440** and to come into contact with the lower semiconductor patterns **150**. The lower semiconductor patterns **150** may come into contact with the substrate **10**. That is, the lower semiconductor patterns **150** and the upper semiconductor patterns **250** may be formed perpendicular to the substrate **10**. According to other embodiments of inventive concepts, the boundary between lower semiconductor pattern **150** and the upper semiconductor pattern **250** may have a continuous crystalline structure without a discontinuous boundary surface caused due to crystals.

[0172] The information storing layer **410** is interposed between the upper and lower conductive patterns **431** to **436** and **441** to **446** and the upper and lower semiconductor patterns **150** and **250**. The information storing layer **410** may wrap around circumferences of lower semiconductor patterns **150** and upper semiconductor patterns **250**.

[0173] The lower wiring structure **430** and the upper wiring structure **440** may be different from each other in the structure of the contact plugs connected to the conductive patterns **431** to **436** and **441** to **446**.

[0174] Specifically, the lower conductive patterns **431** to **436** are directly connected to the first lower contact plugs **450** in the lower word line contact region LWCTR, and the second

lower contact plugs **520** are directly connected electrically to upper surfaces of the first lower contact plugs **450**. The one-sidewalls of the lower conductive patterns **431** to **436**, which are vertically adjacent to each other in the lower word line contact region LWCTR, are spaced from each other at a predetermined interval. One first lower contact plug **450** may be disposed between the one-sidewalls of the lower conductive patterns **431** to **436** vertically adjacent to lower contact plugs **450** and may be formed of the same material of the lower conductive patterns **431** to **436**. That is, the first lower contact plugs **450** may contain at least one of doped polysilicon, metal layers, metal nitride layers, and metal silicides. The first lower contact plugs **450** and the second lower contact plugs **520** may also be formed of the same material.

[0175] The upper conductive patterns **441** to **446** are connected electrically to the upper contact plugs **510** in the upper word line contact region UWCTR. The upper contact plugs **510** may be formed of the same conductive material as that of the upper conductive patterns **441** to **446**.

[0176] In this embodiment of the inventive concept, the first lower contact plugs **450** and the second lower contact plugs **520** may be formed in other steps. That is, the first lower contact plugs **450** may be formed, before the upper thin film structure **200** is formed.

[0177] The forming of the first lower contact plugs **450** includes forming first lower contact holes **164** in the lower insulating layer **160** and filling the first lower contact holes **162** with a conductive material.

[0178] The first lower contact holes **162** may be formed by anisotropically etching the lower insulating layer **160**. Therefore, in the first lower contact holes **162**, a lower width may be less than an upper width. Since the first lower contact holes **162** are formed by patterning the lower insulating layer **160**, the distance between the first lower contact holes **162** may be larger than the distance between the lower conductive patterns **431** to **436**. The distance between the first lower contact holes **162** may be different depending on the distance between the sidewalls of the lower conductive patterns **431** to **436** vertically adjacent to each other.

[0179] The first lower contact plugs **450** formed by filling the first lower contact holes **162** with the conductive material may be formed in a cylindrical shape. In the first lower contact plugs **450** formed in the first lower contact holes **162**, a lower width may be smaller than an upper width. The forming of the first lower contact plugs **450** is performed, before the upper thin film structure **200** is formed. Therefore, the maximum thickness of the first lower contact plugs **450** may be smaller than the total thickness of the lower wiring structure **430**.

[0180] The second lower contact plugs **520** may be formed, after the upper wiring structure **440** is formed. The forming of the second lower contact plugs **520** includes forming upper contact holes **262** on the upper insulating layer **260** to expose the upper surfaces of the fist lower contact plugs **450**. In this case, the upper contact holes **262** are formed in the upper insulating layer **260** covering the first lower contact plugs **450**. The etching depth of the upper contact holes **262** is not larger than the height of the upper wiring structure **440**.

[0181] That is, by the method for forming the contact hole with the restrictive etching depth, it is possible to form the contact structure with the height larger than the depth of the contact hole. In other words, the lower wiring structure **430** disposed below the upper wiring structure **440** may be connected to the peripheral circuits via the first lower contact plugs **450** and the second lower contact plugs **520** formed in the different steps. Therefore, it is possible to overcome a process restriction that the contact hole is not completely opened due to an increase in the etching depth of the contact hole when the contact plugs are formed to connect the lower wiring structure **430** to the peripheral circuit.

[0182] Since the first lower contact plugs **450** and the second lower contact plugs **520** are formed in the different steps, the maximum width (that is, the width of the uppermost contact plug) of the first lower contact plugs **450** may be larger than the minimum width (that is, the width of the lowermost contact plug) of the second lower contact plugs **520**.

[0183] In the upper word line contact region UWCTR, as described with reference to FIGS. **6**A, **6**B, and **6**C, the upper contact plugs **510** may be formed to be connected to the upper conducive patterns **441** to **446**, respectively.

[0184] FIG. **19** is a schematic block diagram illustrating an example of a memory system including a non-volatile memory device according to embodiments of inventive concepts.

[0185] Referring to FIG. **19**, a memory system **1100** may be applicable to a PDA, a portable computer, a web tablet, a wireless phone, a mobile phone, a digital music player, a memory card, or any device capable of transmitting and/or receiving information in a wireless environment.

[0186] The memory system **1100** includes a controller **1110**, an input/output device **1120** such as a keypad, a keyboard, or a display device, a memory **1130**, an interface **1140**, and a bus **1150**. The memory **1130** and the interface **1140** communicate with each other through the bus **1150**.

[0187] The controller **1110** includes at least one microprocessor, a digital signal processor, a microcontroller, or another process unit similar thereto. The memory **1130** may be used to store commands executed by the controller **1110**. The input/output device **1120** may receive data or signals from the outside of the memory system **1100** or output data or signals to the outside of the memory system **1100**. For example, the input/output device **1120** may include a keyboard, a keypad, or a display device.

[0188] The memory **1130** includes a non-volatile memory device according to embodiments of inventive concepts. The memory **1130** may further include another kind of memory, a volatile memory capable of being accessed at any time, and other various kinds of memories.

[0189] The interface **1140** transmits data to a communication network or receives data from a communication network.

[0190] FIG. **20** is a schematic block diagram illustrating an example of a memory card including a non-volatile memory device according to embodiments of inventive concepts.

[0191] Referring to FIG. **20**, a memory card **1200** supporting a large data storing ability is mounted with a flash memory device **1210** according to inventive concepts. The memory card **1200** according to inventive concepts includes a memory controller **1220** generally controlling data exchange between a host and the flash memory device **1210**.

[0192] An SRAM **1221** is used as a working memory of a processing unit **1222**. A host interface **1223** has a data exchange protocol of a host connected to the memory card **1200**. An error correction coding block **1224** detects and corrects errors contained in data read from the multi-bit flash memory device **1210**. A memory interface **1225** interfaces the flash memory device **1210** according to inventive concepts. The processing unit **1222** generally controls data exchange of the memory controller **1220**. Although not illustrated in the

drawing, it is apparent to those skilled in the art that the memory card **1200** according to inventive concepts may further include a ROM (not illustrated) storing code data used to interface with the host.

[0193] FIG. **21** is a schematic block diagram illustrating an example of an information processing system including a non-volatile memory device according to inventive concepts.

[0194] Referring to FIG. **21**, a flash memory system **1310** according to inventive concepts is mounted in an information processing system such as a mobile device or a desktop computer. An information processing system **1300** according to inventive concepts includes a modem **1320**, a central processing unit **1330**, a RAM **1340**, and a user interface **1350** electrically connected to the flash memory system **1310** via a system bus **1360**. The flash memory **1310** may have substantially the same configuration as that of the memory system or the flash memory system mentioned above. The flash memory system **1310** stores data processed by the central processing unit **1330** or data input from the outside. Here, the above-described flash memory system **1310** may be formed as a solid state drive (SSD). In this case, the information processing system **1300** may stably store large amounts of data in the flash memory system **1310**. Since a resource necessary for error correction may be reduced in the flash memory system **1310** with an increase in reliability, a high-speed data exchanging function may be realized in the information processing system **1300**. Although not illustrated, it is apparent to those skilled in the art that an application chipset, a camera image processor (CIS), an input/output device, or the like may further be included in the information processing system **1300** according to the inventive concepts.

[0195] Flash memory devices and/or memory systems according to inventive concepts may be realized in various types of packages. For example, flash memory devices or the memory systems according to inventive concepts may be packaged as package on package (PoP), ball grid array (BGAs), chip scale packages (CSPs), plastic leaded chip carrier (PLCC), plastic dual in-line package (PDIP), die in waffle pack, die in wafer form, chip on board (COB), ceramic dual in-line package (CERDIP), plastic metric quad flat pack (MQFP), thin quad flat pack (TQFP), small outline (SOIC), shrink small outline package (SSOP), thin small outline (TSOP), thin quad flatpack (TQFP), system in package (SIP), multi chip package (MCP), wafer-level fabricated package (WFP), or wafer-level processed stack package (WSP).

[0196] In the three-dimensional semiconductor devices according to embodiments of inventive concepts, it is possible to overcome a process restriction that is caused due to an increase in the height of the contact plugs connecting memory cells to peripheral circuits as the number of laminated memory cells is increased.

[0197] That is, by using a process technique to form the contact plugs of which a height is lower than the total height of the laminated word lines, it is possible to form the contact structure connecting the word lines located in the lowermost portion to the wiring disposed above the laminated word lines.

[0198] Although inventive concepts have been described in connection with embodiments thereof illustrated in the accompanying drawings, it is apparent to those skilled in the art that various substitutions, modifications and changes may be made thereto without departing from the scope of inventive concepts. Therefore, it should be understood that the above-described embodiments are illustrative and are should not limit the scope of inventive concepts.

1. A method of forming a three-dimensional semiconductor device, the method comprising:

forming a thin film structure on wiring and contact regions of a substrate, wherein the thin film structure includes a plurality of alternating sacrificial layers and inter-layer insulating layers, and wherein the thin film structure defines a terraced structure in the contact region;

forming an insulating layer on the terraced structure in the contact region;

forming sacrificial contact patterns through the insulating layer in the contact region in a direction perpendicular with respect to a surface of the substrate, wherein each of the sacrificial contact patterns is connected to a respective one of the sacrificial layers;

removing the sacrificial layers and the sacrificial contact patterns to define recess regions between the inter-layer insulating layers and through the insulating layer; and

forming wiring patterns in the recess regions between the inter-layer insulating layers and through the insulating layer.

2. The method of claim **1** wherein forming the sacrificial contact patterns includes,

forming contact openings through the insulating layer in the contact region, with each of the contact openings exposing an end portion of a respective one of the sacrificial layers, and

forming the sacrificial contact patterns in respective ones of the contact openings.

3. The method of claim **1**, wherein a distance between adjacent sacrificial contact patterns in a direction parallel with respect to a surface of the substrate is greater than a distance between adjacent sacrificial layers in a direction perpendicular with respect to the surface of the substrate.

4. The method of claim **1** wherein each of the sacrificial layers extends from the wiring region into the contact region a different distance to define the terraced structure such that an end surface portion of each of the sacrificial layers is exposed relative to the other sacrificial layers, and wherein the sacrificial contact patterns are connected to exposed end surface portions of the respective sacrificial layers.

5. The method of claim **1** wherein removing the sacrificial layers and the sacrificial contact patterns comprises,

forming a trench through the thin film structure wherein the trench defines exposed sidewalls of the sacrificial layers, the inter-layer insulating layers, and the sacrificial contact patterns, and

etching the exposed sidewalls of the sacrificial layers and the sacrificial contact patterns to define the recess regions.

6. The method of claim **1** wherein the thin film structure comprises a first thin film structure, the method further comprising:

after forming the sacrificial contact patterns, forming a second thin film structure, wherein the second thin film structure includes a plurality of alternating second sacrificial layers and second inter-layer insulating layers, and wherein the second thin film structure defines a terraced structure in the contact region.

7. The method of claim **6** wherein the contact region includes first and second contact regions with the second contact region between the wiring region and the first contact region, wherein the terraced structure of the first thin film

structure is in the first contact region, and wherein the terraced structure of the second thin film structure is in the second contact region.

8. The method of claim **6** wherein the wiring patterns comprise first wiring patterns, wherein removing the sacrificial layers and the sacrificial contact patterns includes removing the second sacrificial layers of the second thin film structure to define second recess regions between the second inter-layer insulating layers, and wherein forming the wiring patterns includes forming second wiring patterns in the second recess regions between the second inter-layer insulating layers.

9. The method according to claim **8** wherein the insulating layer comprises a first insulating layer, the method further comprising:

forming a second insulating layer on the first insulating layer and on the terraced structure of the second thin film structure; and

forming first contact plugs through the second insulting layer wherein each of the first contact plugs is connected to a respective one of the wiring patterns through the first insulating layer; and

forming second contact plugs through the second insulating layer wherein each of the second contact plugs is connected to a respective one of the second wiring patterns.

10. The method according to claim **8** wherein the insulating layer comprises a first insulating layer, the method further comprising:

after forming the second thin film structure, forming a second insulating layer on the first insulating layer and on the terraced structure of the second thin film structure;

forming first sacrificial contact patterns through the second insulating layer wherein the first sacrificial contact patterns are connected to respective ones of the first wiring patterns; and

forming second sacrificial contact patterns through the second insulating layer wherein the second sacrificial contact patterns are connected to respective ones of the second wiring patterns.

11. The method according to claim **10** wherein removing the sacrificial layers and sacrificial contact patterns comprises simultaneously removing the sacrificial layers of the first and second thin film structures, removing the sacrificial contact patterns through the first insulating layer, and removing the first and second sacrificial contact patterns through the second insulating layer.

12. The method according to claim **11** wherein forming the wiring patterns includes forming first wiring patterns between the first inter-layer insulating layers and through the first and second insulating layers and forming second wiring patterns between the second inter-layer insulating layer and through the second insulating layer.

13. The method according to claim **1**, further comprising:

before removing the sacrificial layers and the sacrificial contact patterns, forming a plurality of semiconductor patterns through the thin film structure in the wiring region;

before forming the wiring patterns, forming an information storing layer on surfaces of the recess regions and on surfaces of the semiconductor patterns exposed in the recess regions, wherein after forming the wiring patterns, the information storing layer is between each of the wiring layers and the adjacent inter-layer insulating layers.

14-20. (canceled)

* * * * *