US 20100240205A1

(19) United States

(12) Patent Application Publication

Son et al.

(10) Pub. No.: US 2010/0240205 A1

(43) Pub. Date: Sep. 23, 2010

(54) METHODS OF FABRICATING THREE-DIMENSIONAL NONVOLATILE MEMORY DEVICES USING EXPANSIONS

(75) Inventors: **Byoungkeun Son**, Suwon-si (KR); **Hansoo Kim**, Suwon-si (KR); **Jinho Kim**, Hwaseong-si (KR); **Kihyun Kim**, Hwaseong-si (KR)

Correspondence Address:
MYERS BIGEL SIBLEY & SAJOVEC
PO BOX 37428
RALEIGH, NC 27627 (US)

(73) Assignee: **Samsung Electronics Co., Ltd.**

(21) Appl. No.: **12/720,021**

(22) Filed: **Mar. 9, 2010**

(30) **Foreign Application Priority Data**

Mar. 19, 2009 (KR) 10-2009-0023626

Publication Classification

(51) **Int. Cl.**
H01L 21/28 (2006.01)

(52) **U.S. Cl.** **438/588**; 257/E21.209

(57) **ABSTRACT**

Provided are three-dimensional nonvolatile memory devices and methods of fabricating the same. The memory devices include semiconductor pillars penetrating interlayer insulating layers and conductive layers alternately stacked on a substrate and electrically connected to the substrate and floating gates selectively interposed between the semiconductor pillars and the conductive layers. The floating gates are formed in recesses in the conductive layers.

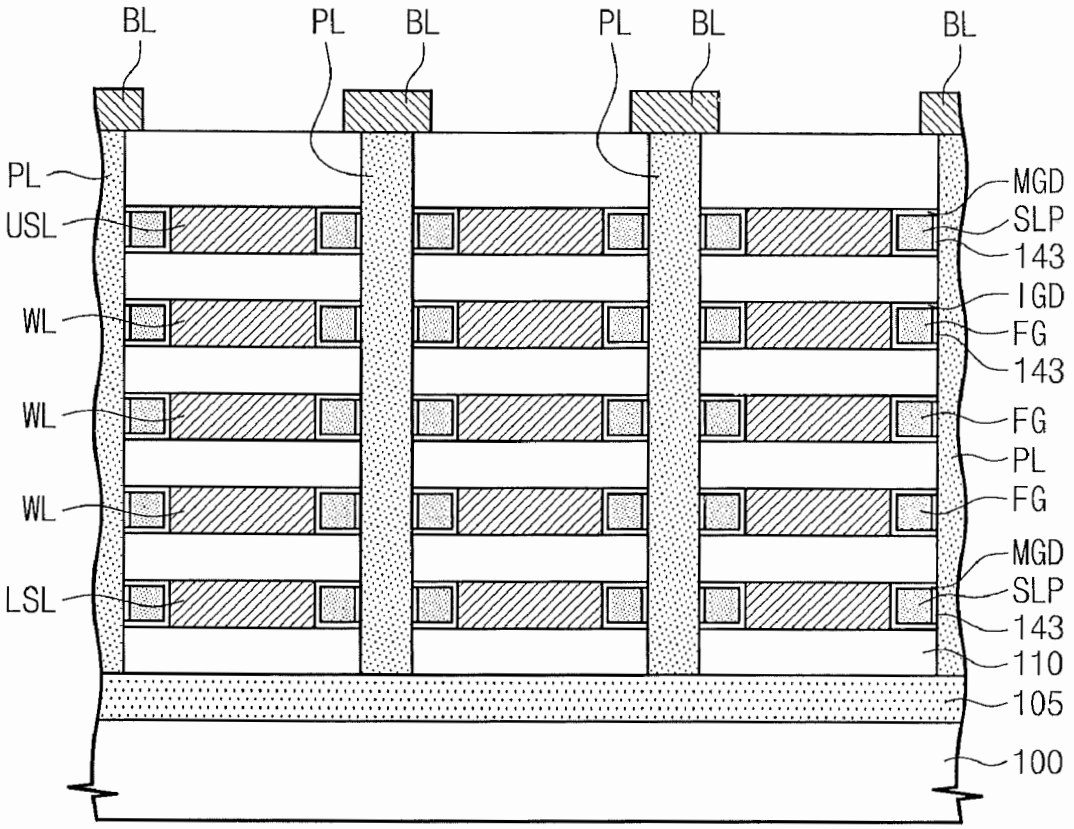

Fig. 1

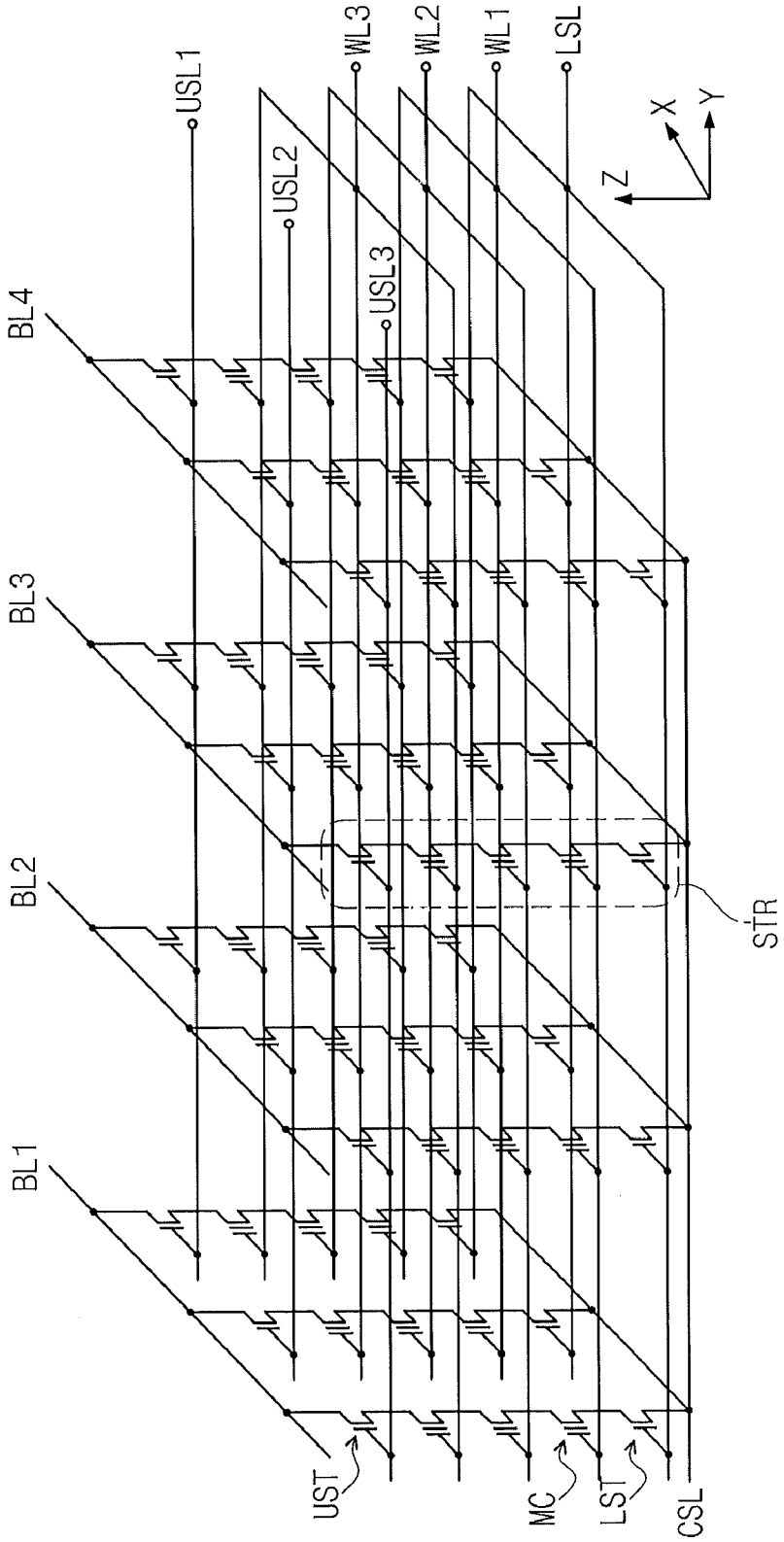
BL1
BL2
BL3
BL4
USL1
USL2
USL3
WL3
WL2
WL1
LSL
Z
X
Y
STR
UST
MC
LST
CSL

Fig. 2

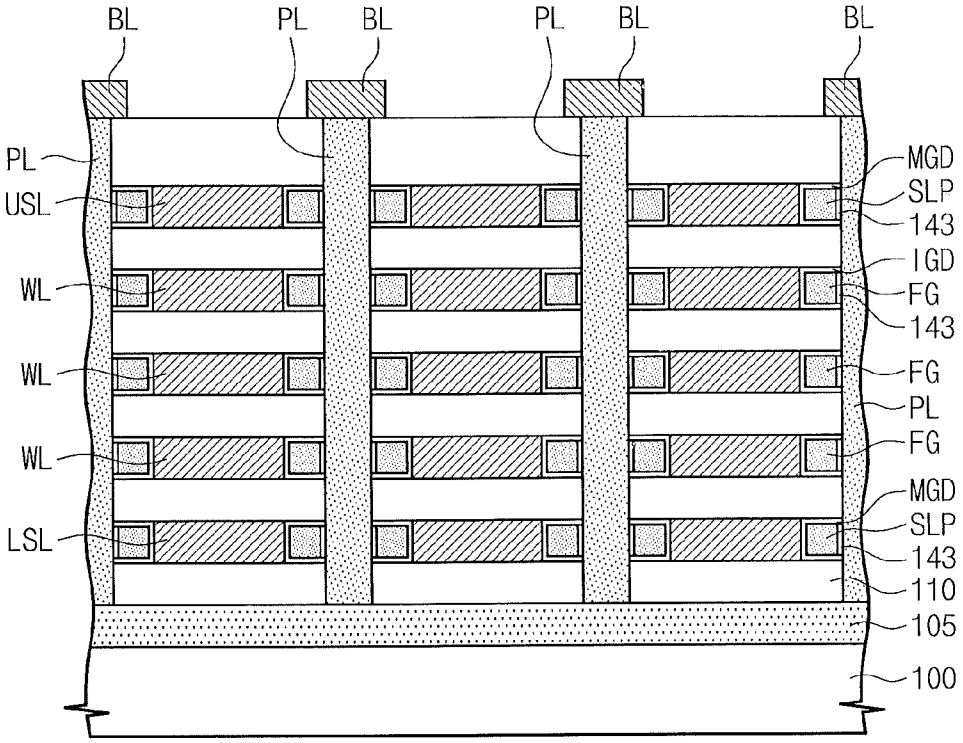
BL
PL
BL
PL
BL
BL
PL
USL
WL
WL
WL
LSL
MGD
SLP
143
IGD
FG
143
FG
PL
FG
MGD
SLP
143
110
105
100

Fig. 3

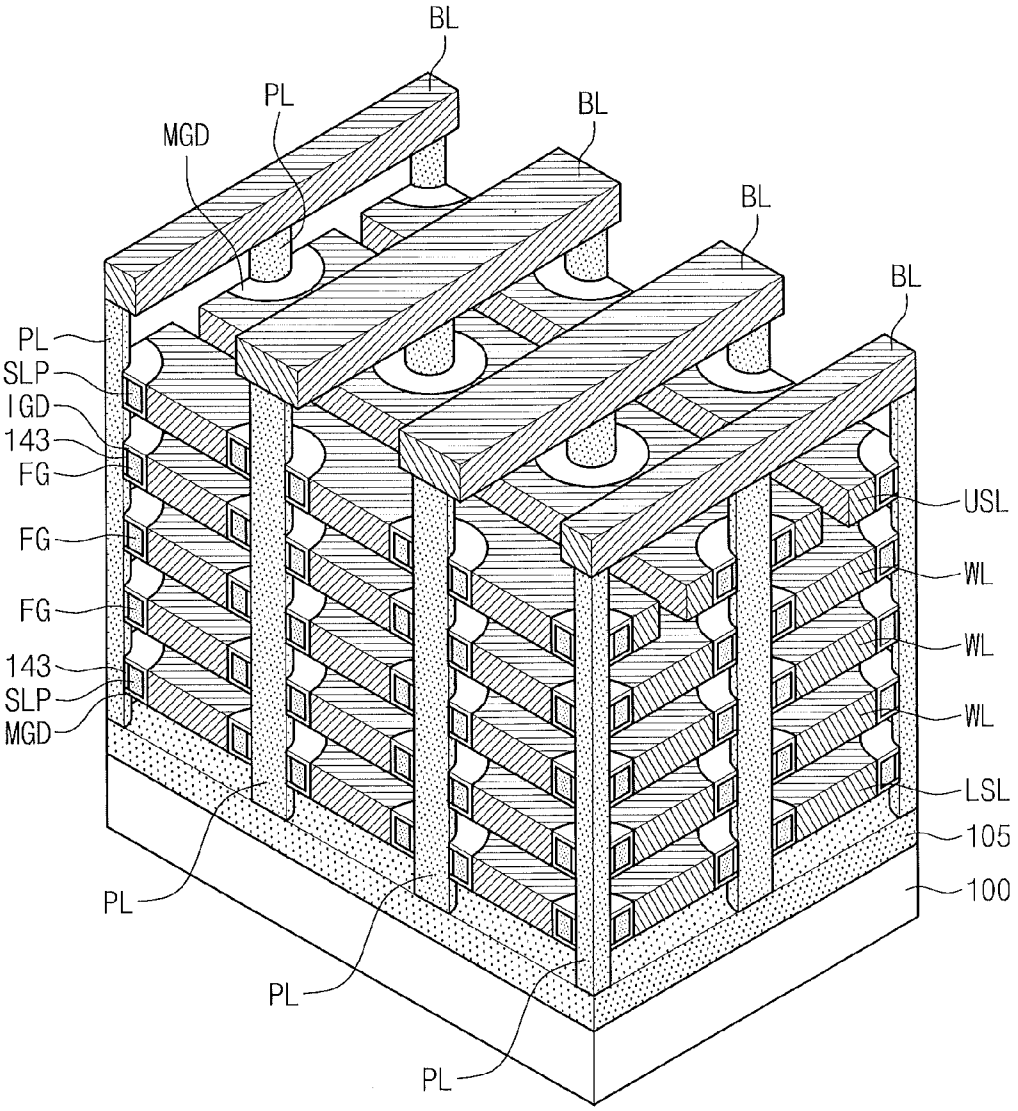
BL
PL
MGD
BL
BL
BL
PL
SLP
IGD
143
FG
FG
FG
143
SLP
MGD
USL
WL
WL
WL
LSL
105
100
PL
PL
PL

Fig. 4

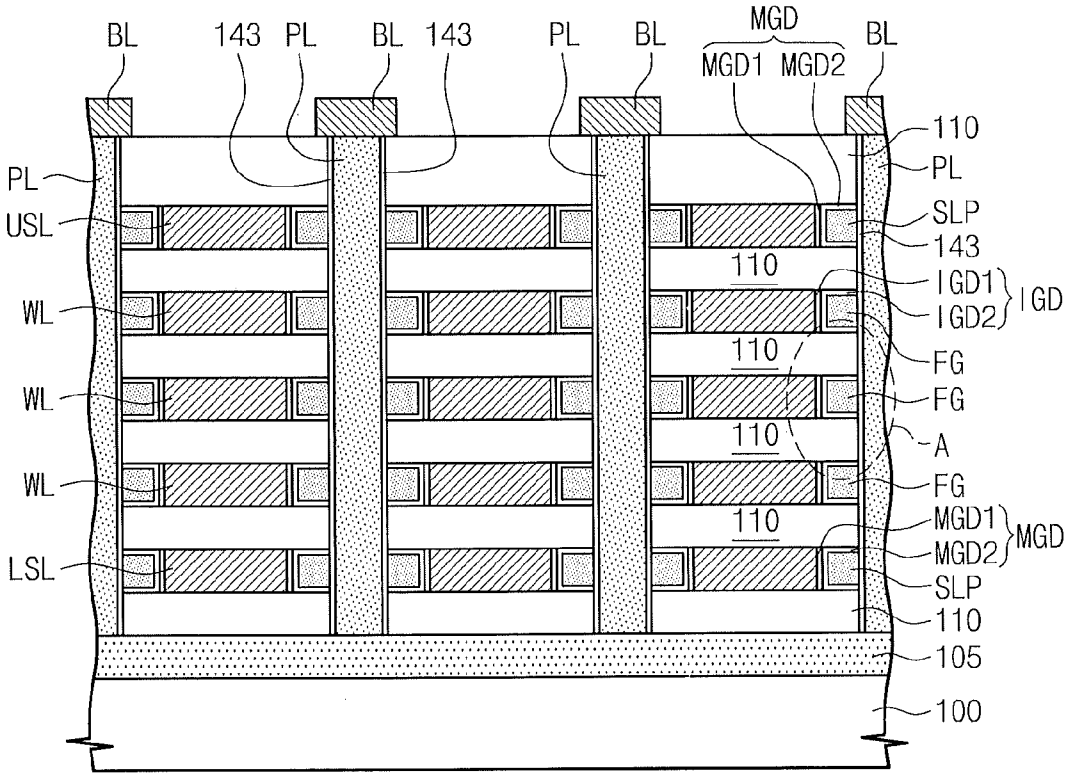
BL
143
PL
BL
143
PL
BL
MGD
MGD1
MGD2
BL
110
PL
PL
USL
SLP
143
110
IGD1
IGD2
IGD
WL
110
FG
WL
FG
110
A
WL
FG
110
MGD1
MGD2
MGD
LSL
SLP
110
105
100

Fig. 5

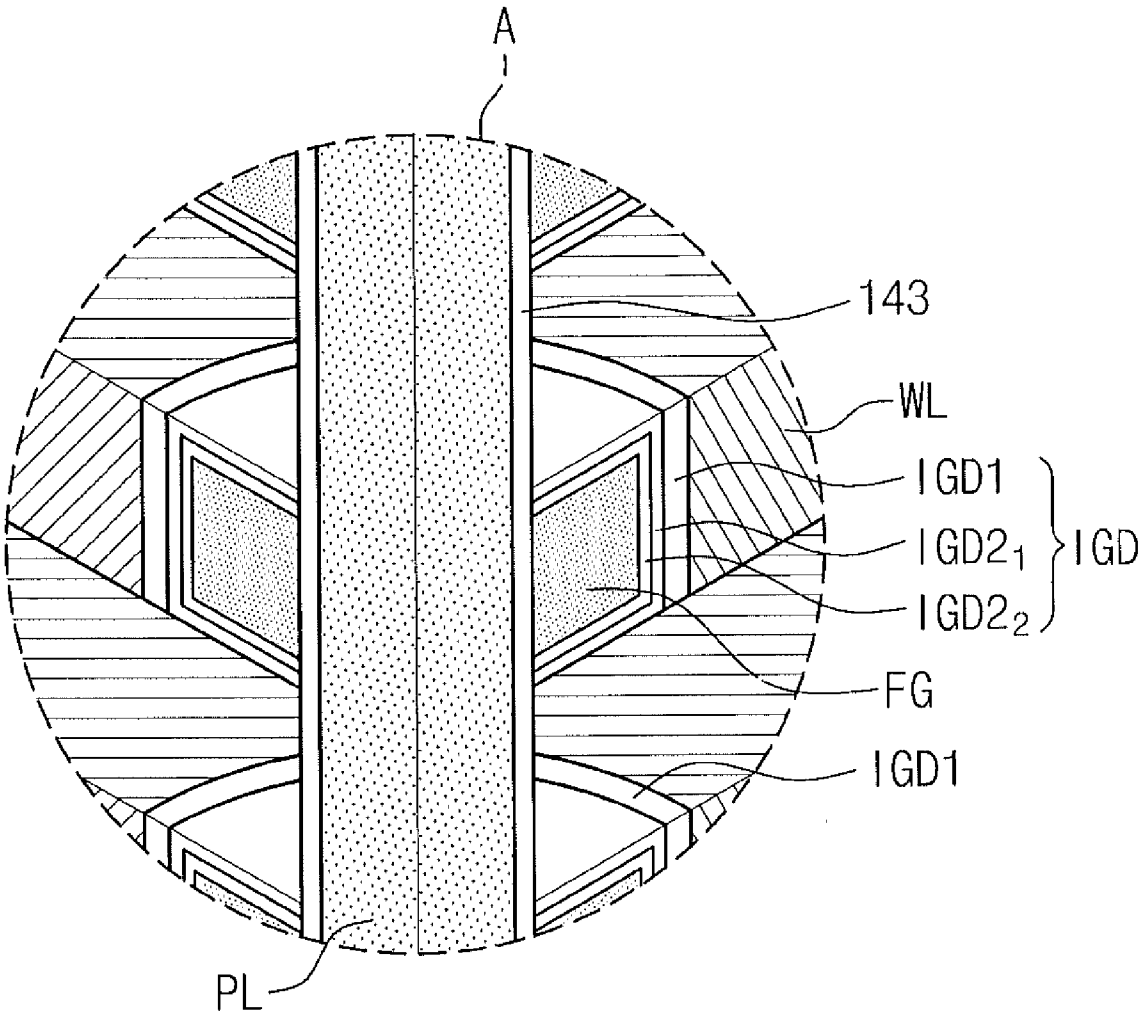

Fig. 6

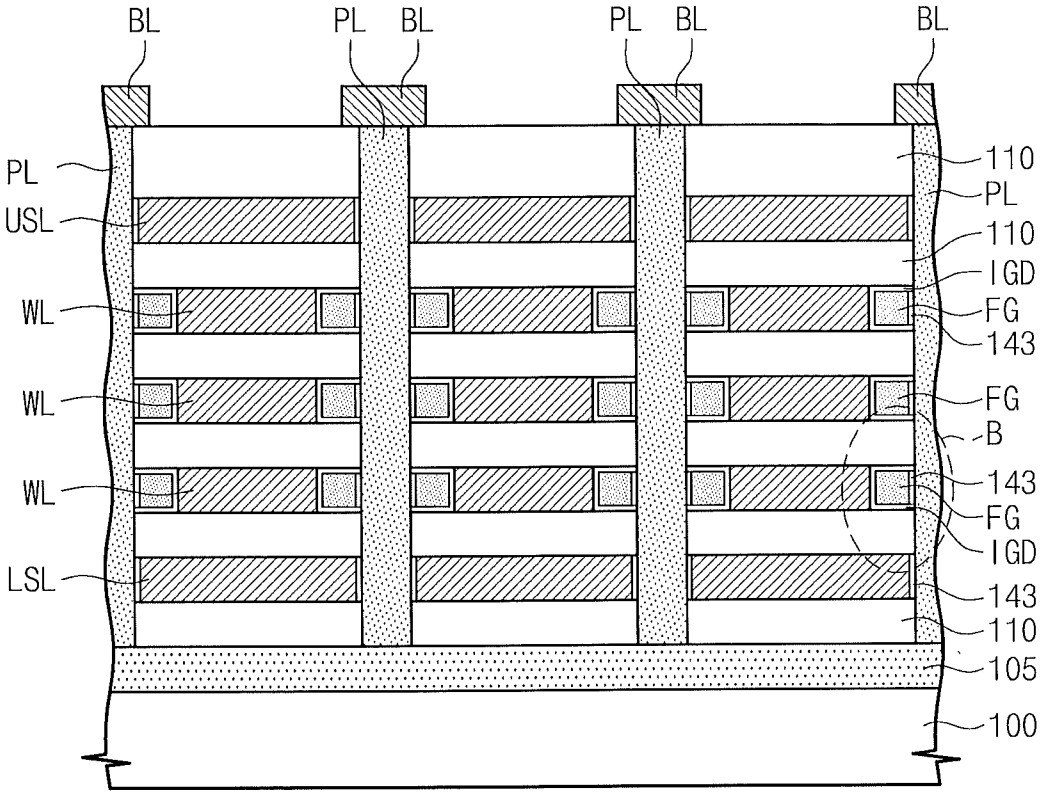
BL
PL
BL
PL
BL
BL
PL
USL
WL
WL
WL
LSL
110
PL
110
IGD
FG
143
FG
B
143
FG
IGD
143
110
105
100

Fig. 7

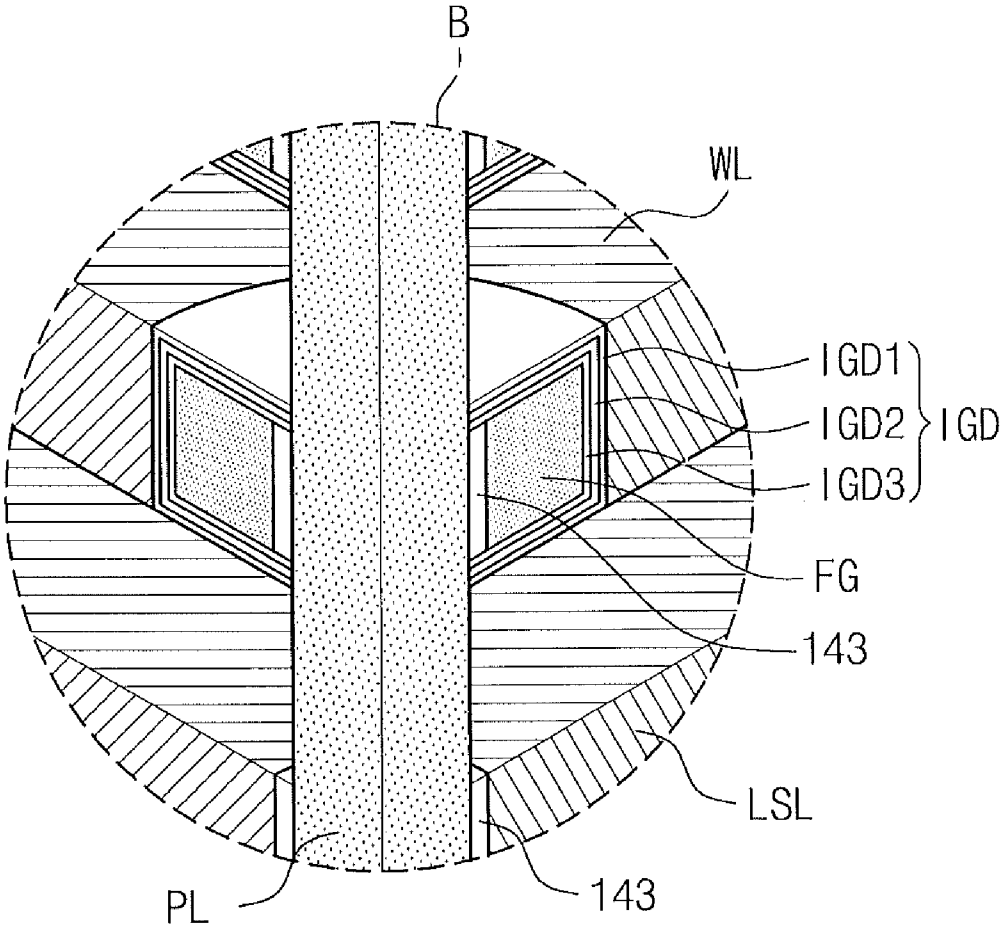

Fig. 8

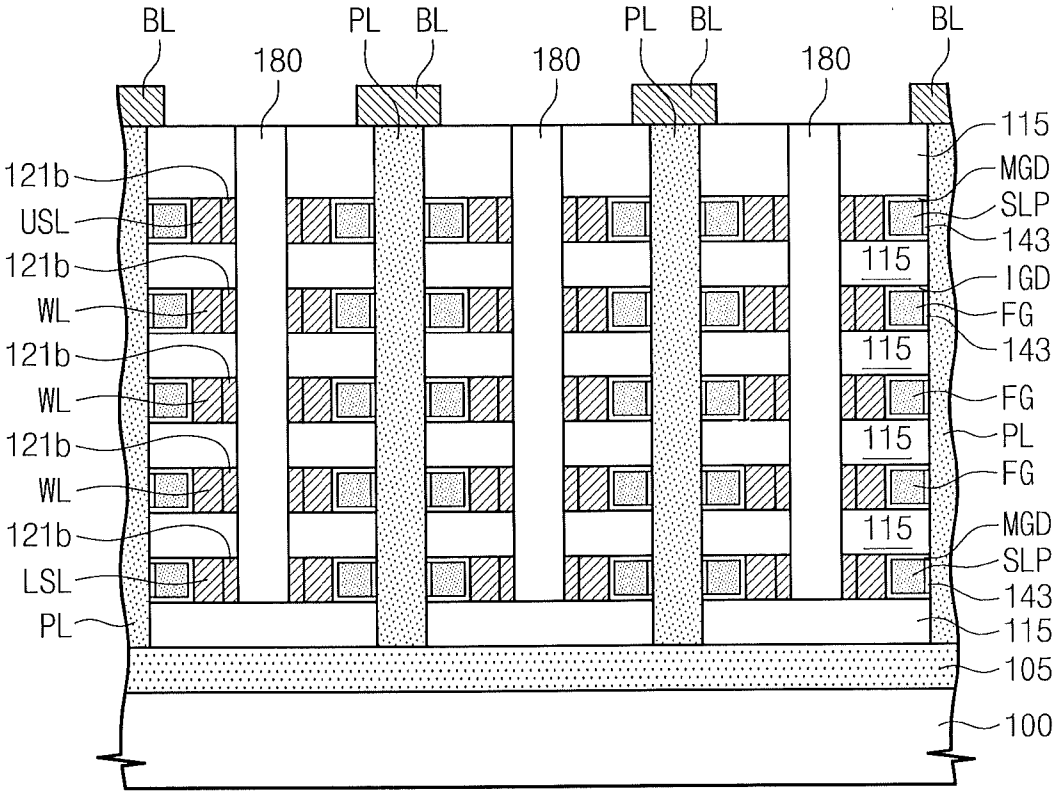
BL
PL
BL
PL
BL
BL
180
180
180
115
MGD
SLP
143
IGD
FG
143
FG
PL
FG
MGD
SLP
143
115
105
100
121b
USL
121b
WL
121b
WL
121b
WL
121b
LSL
PL
115
115
115
115

Fig. 9

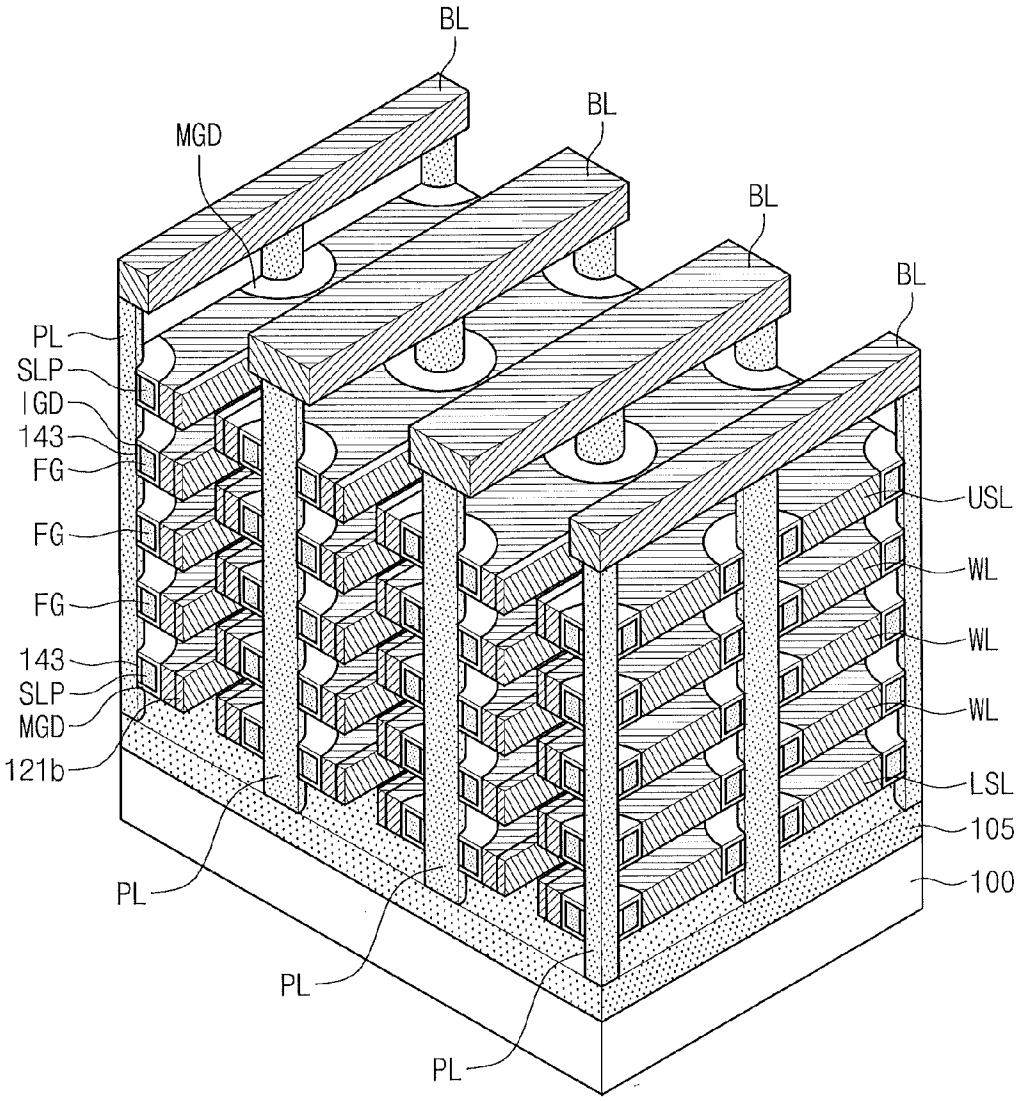
BL
BL
BL
BL
MGD
PL
SLP
IGD
143
FG
FG
FG
143
SLP
MGD
121b
USL
WL
WL
WL
LSL
105
100
PL
PL
PL

Fig. 10

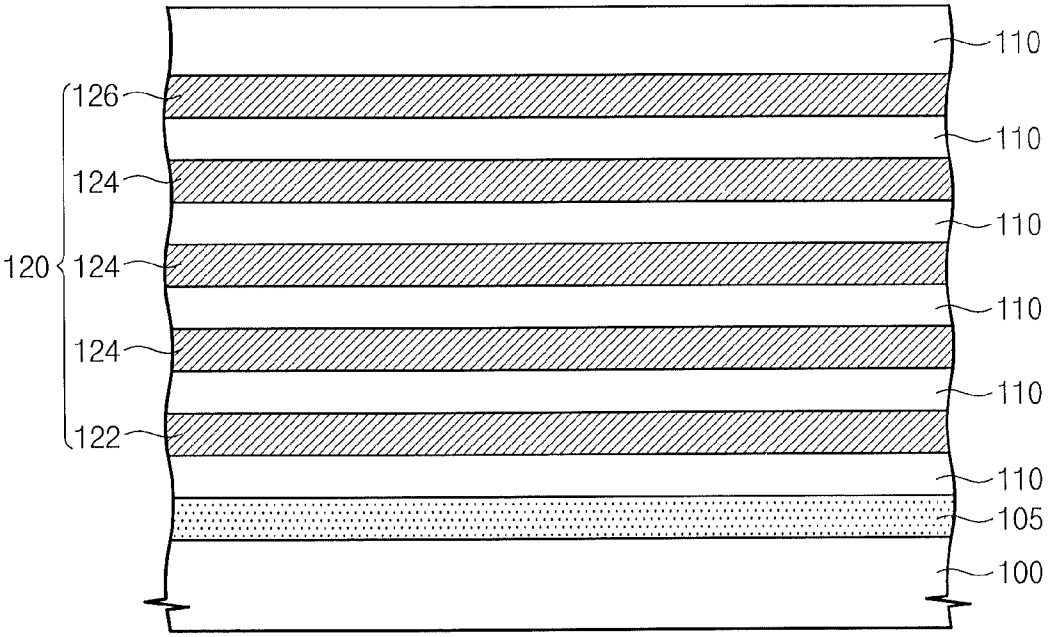

Fig. 11

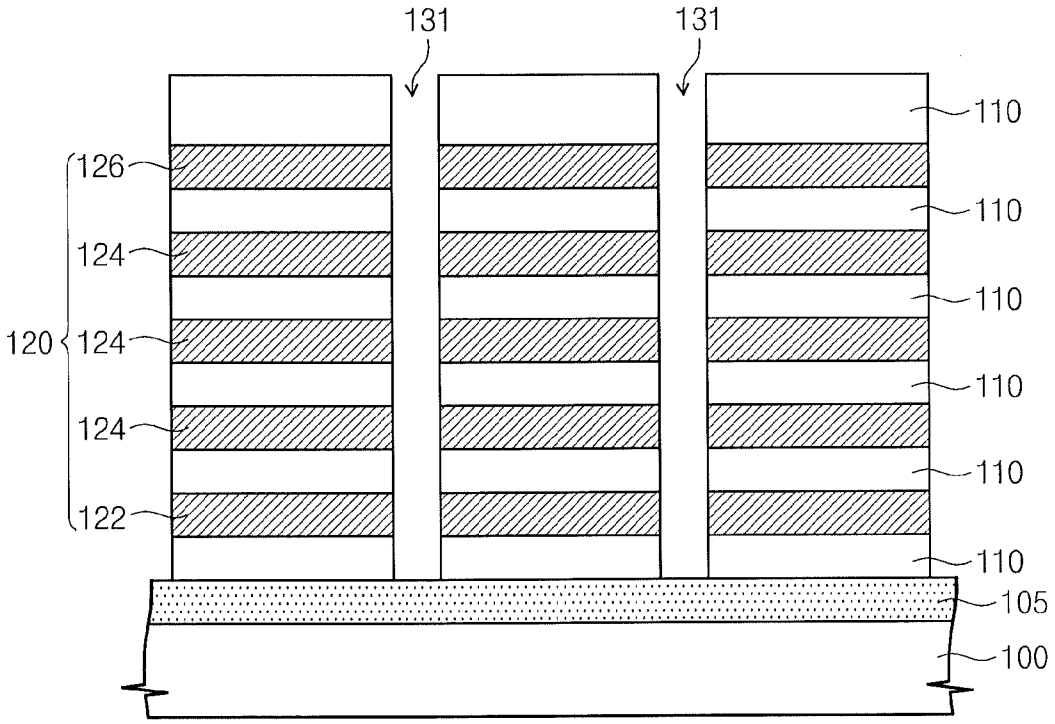

Fig. 12

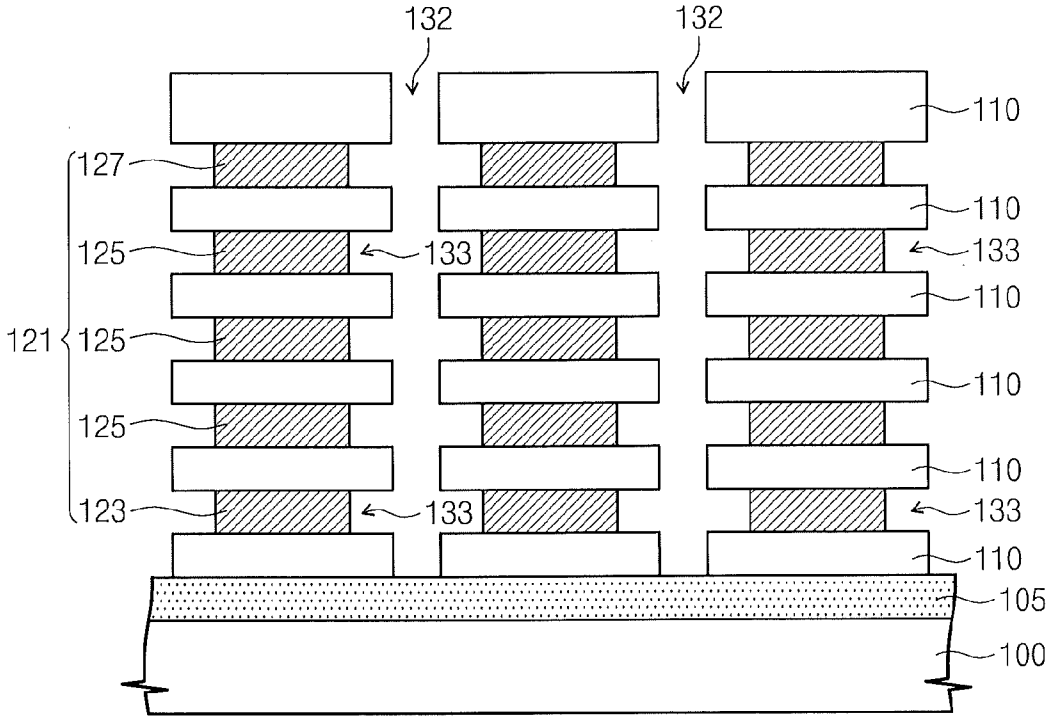
132
132
110
127
110
125
133
133
110
121
125
110
125
110
123
133
133
110
105
100

Fig. 13

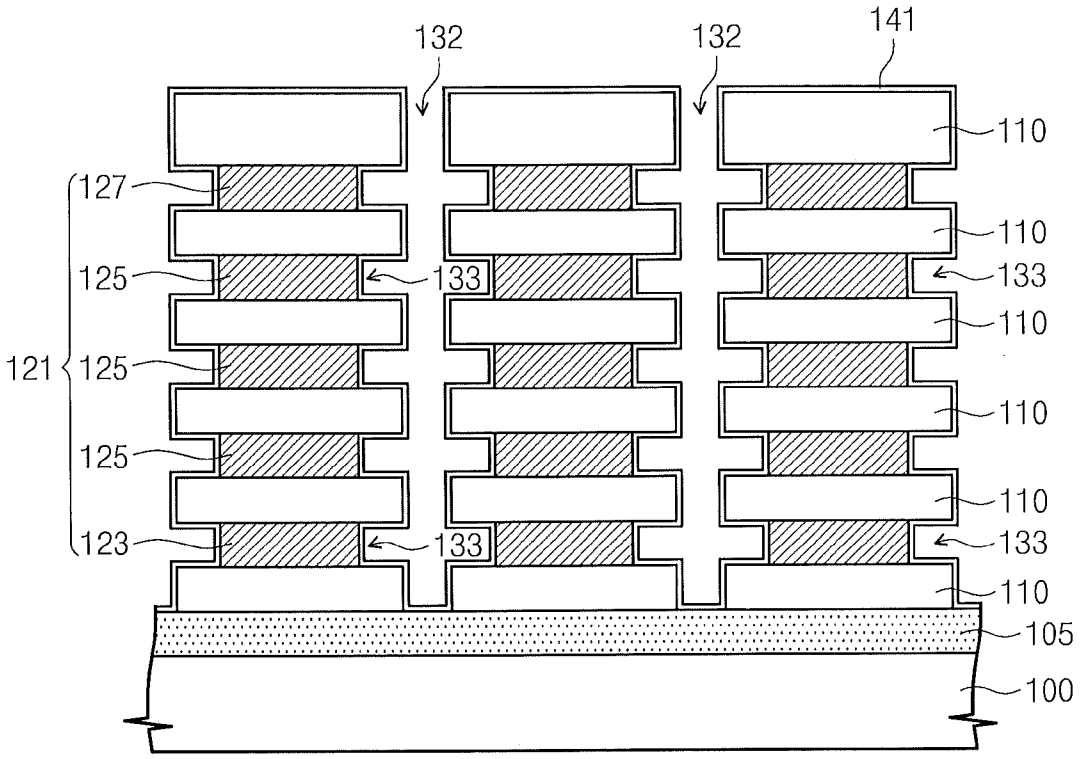
132
132
141
110
127
110
125
133
133
110
121
125
110
125
110
123
133
133
110
105
100

Fig. 14

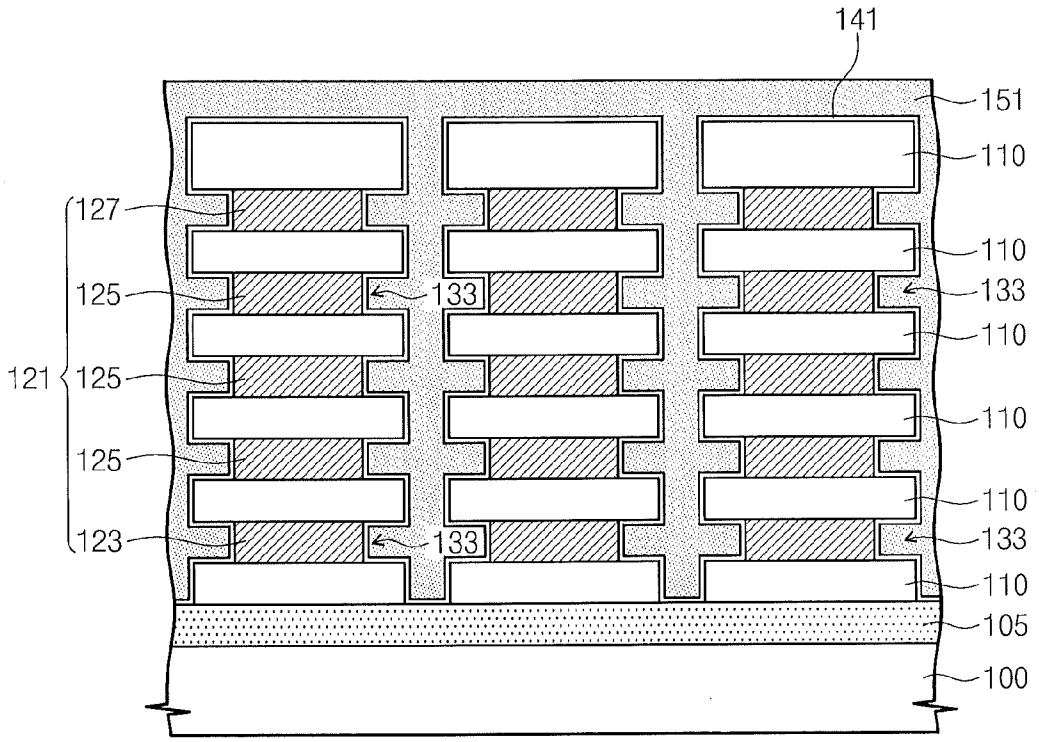
141
151
110
127
110
125
133
133
110
121
125
110
125
110
123
133
133
110
105
100

Fig. 15

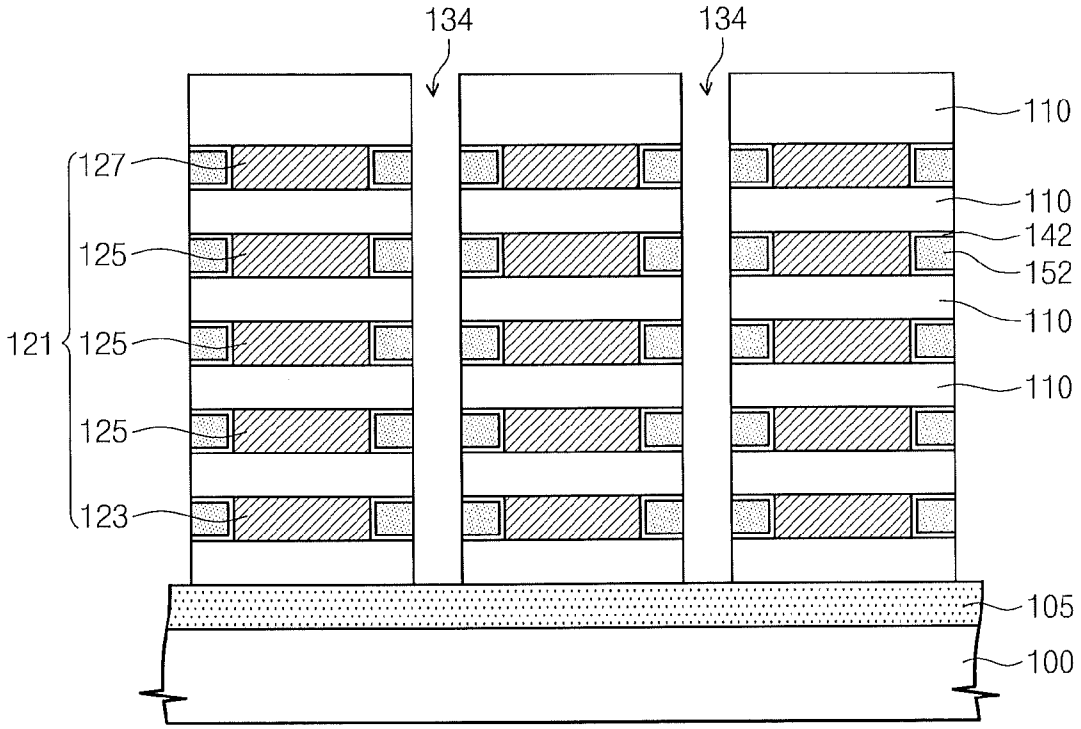

Fig. 16

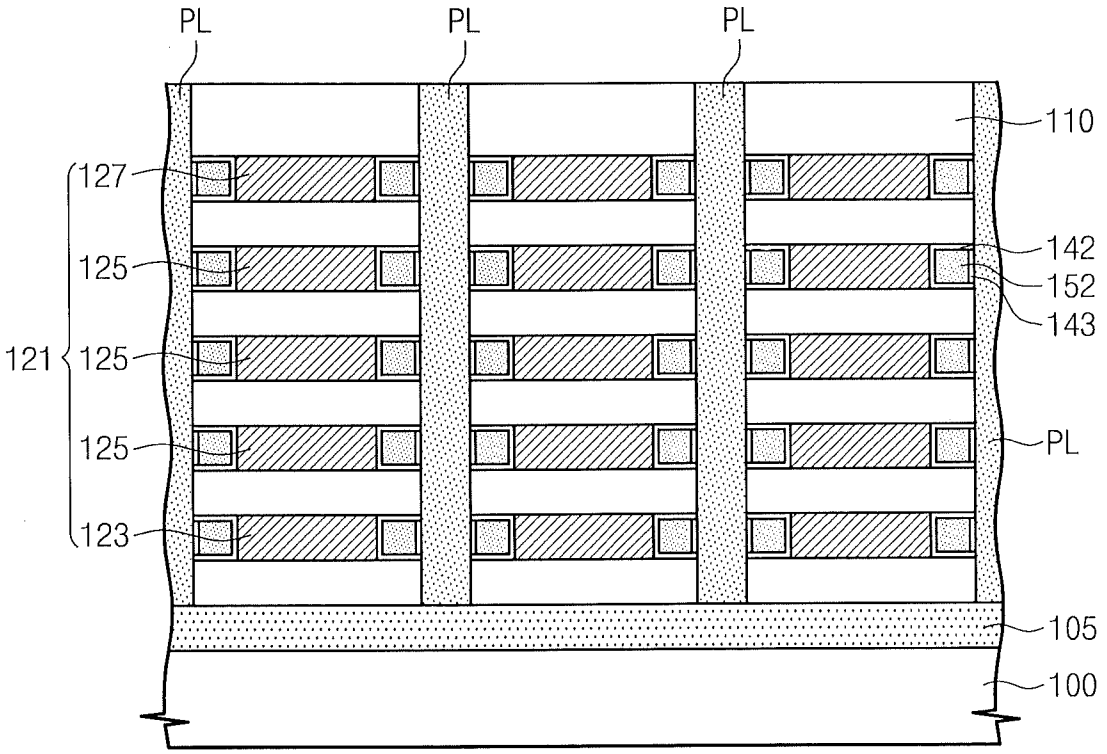

Fig. 17

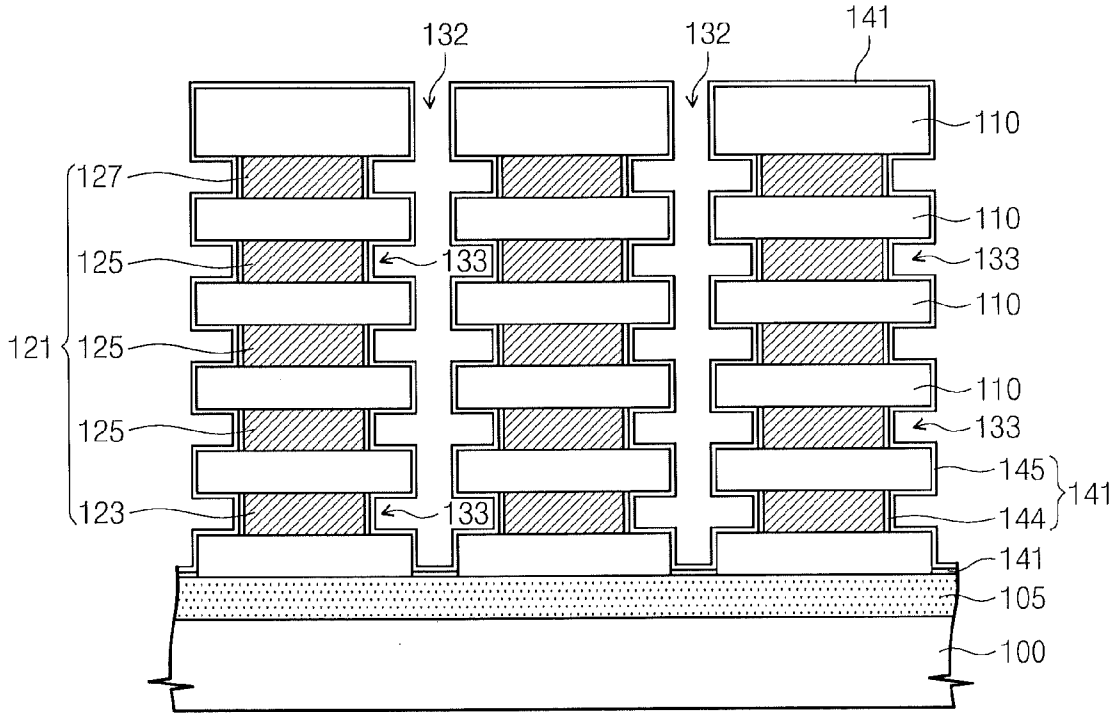
132
132
141
110
127
110
125
133
133
110
121
125
110
125
133
145
141
123
133
144
141
105
100

Fig. 18

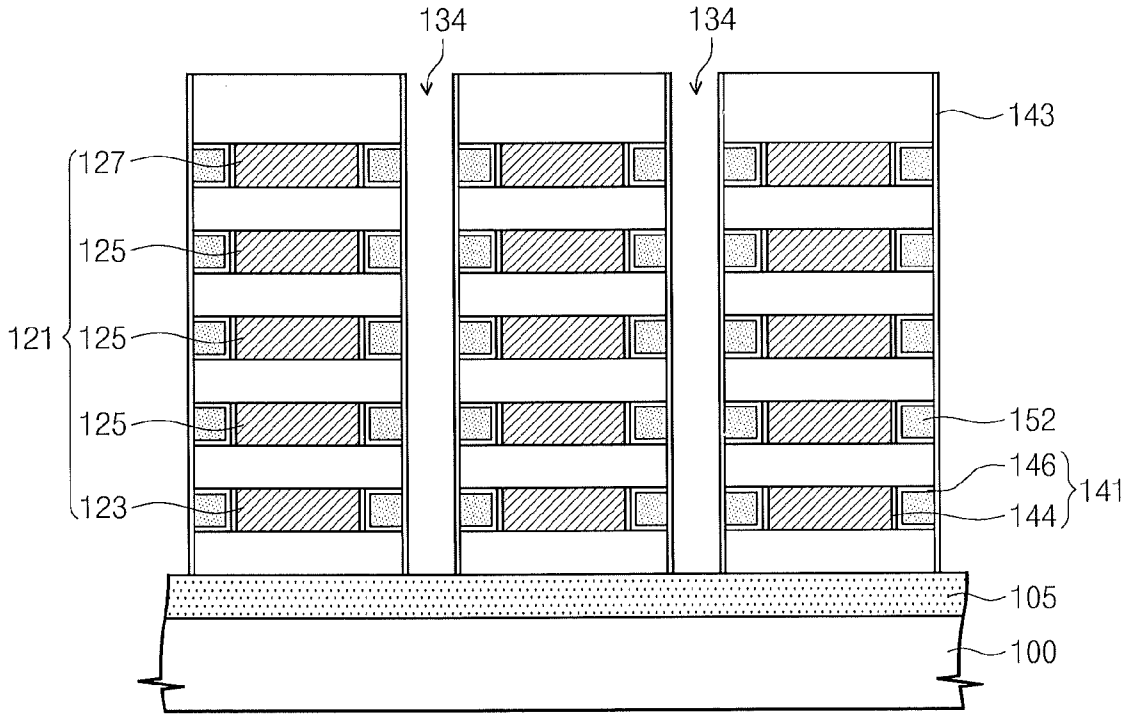

Fig. 19

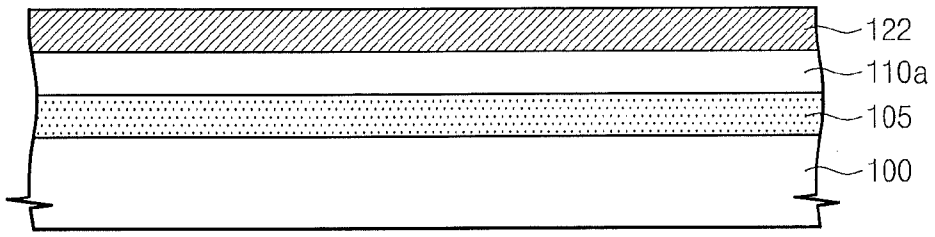

Fig. 20

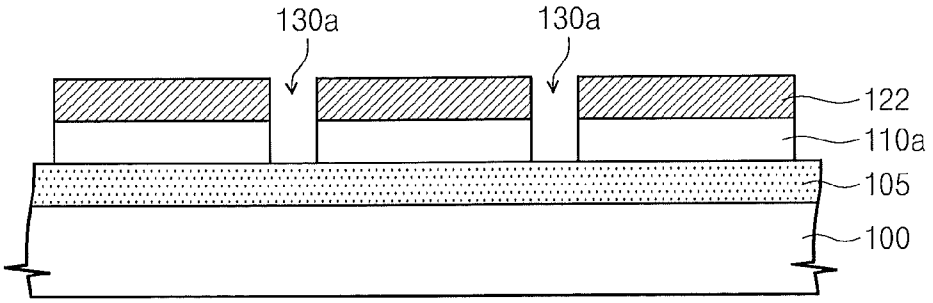

Fig. 21

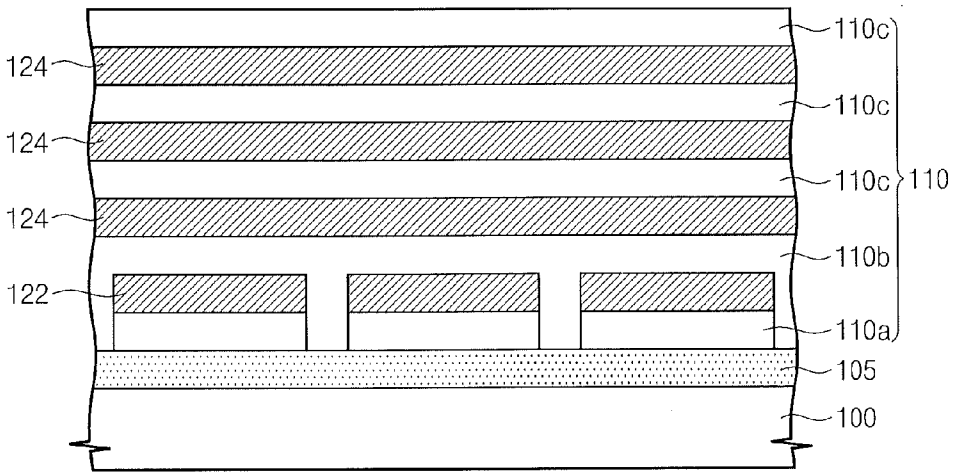
110c
124
110c
124
110c
110
124
110b
122
110a
105
100

Fig. 22

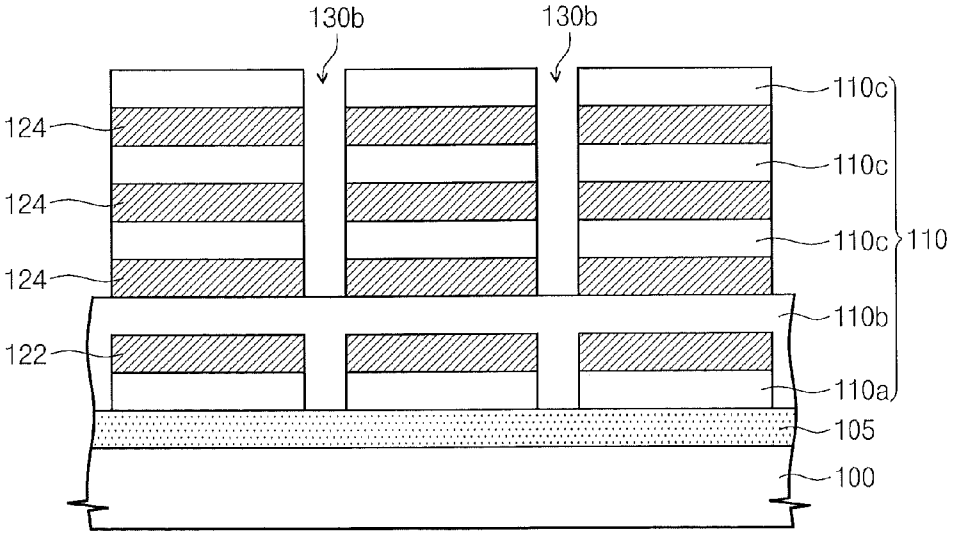
130b
130b
110c
124
110c
124
110c
110
124
110b
122
110a
105
100

Fig. 23

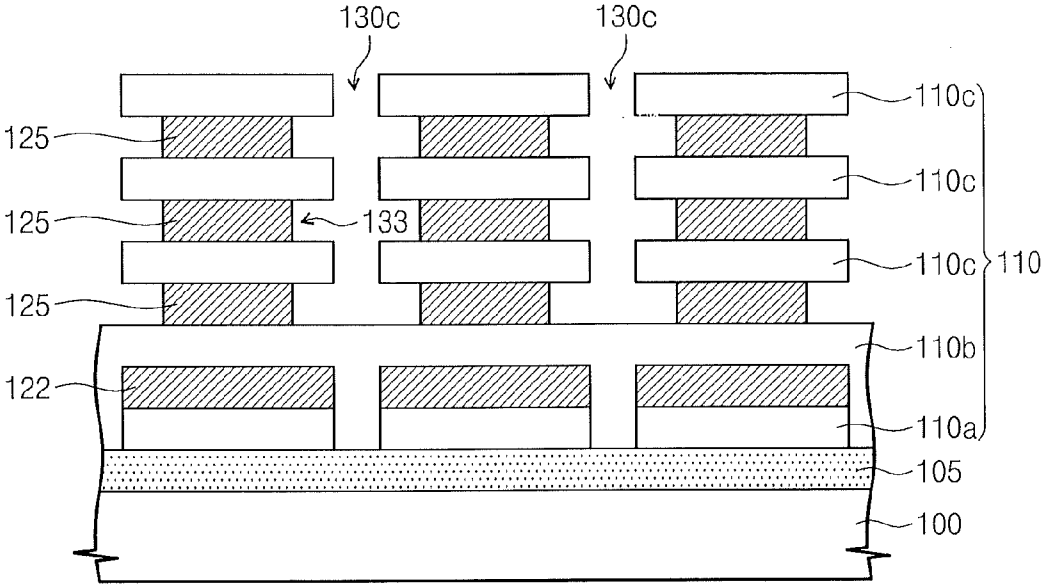
130c
130c
110c
125
110c
125
133
110c
110
125
110b
122
110a
105
100

Fig. 24

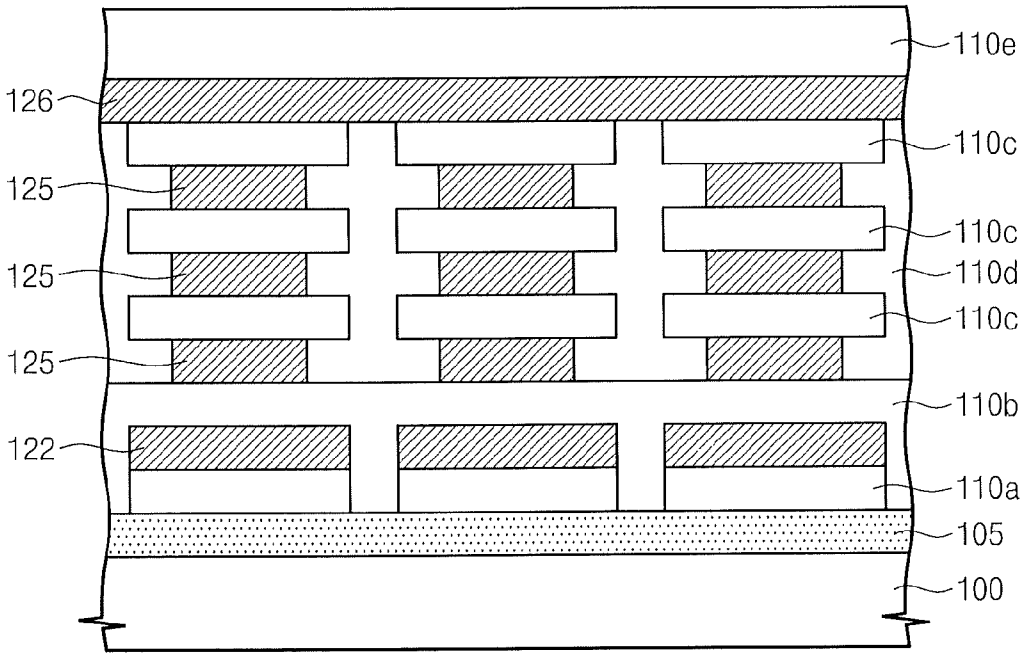

Fig. 25

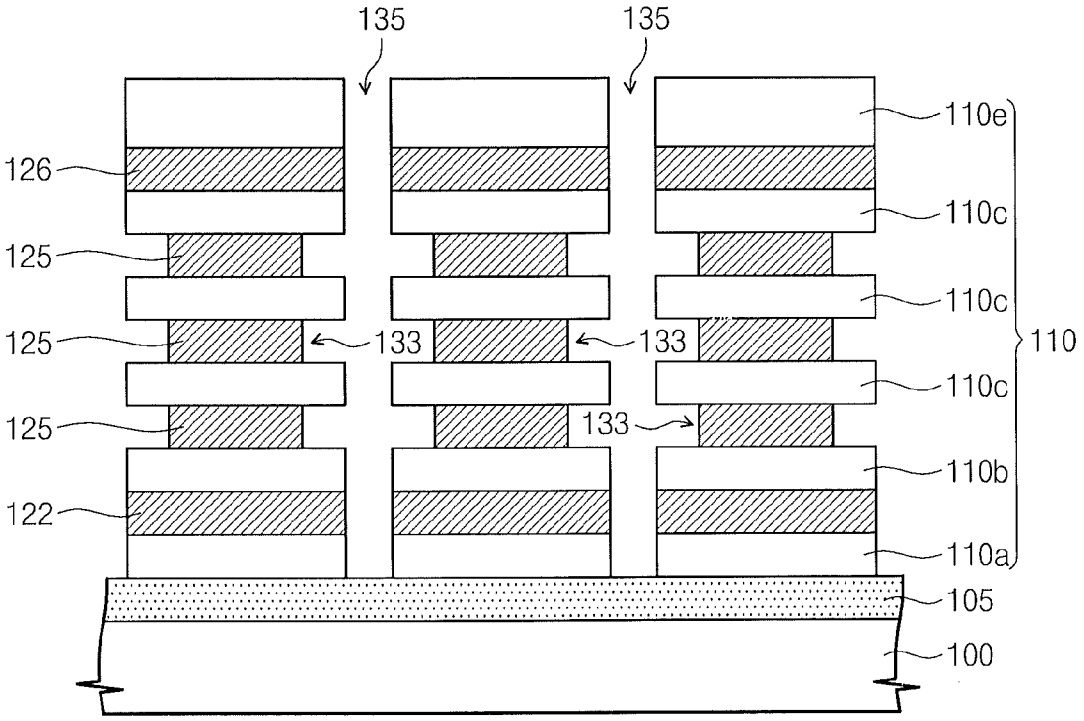
135
135
110e
126
110c
125
110c
125
133
133
110
110c
125
133
110b
122
110a
105
100

Fig. 26

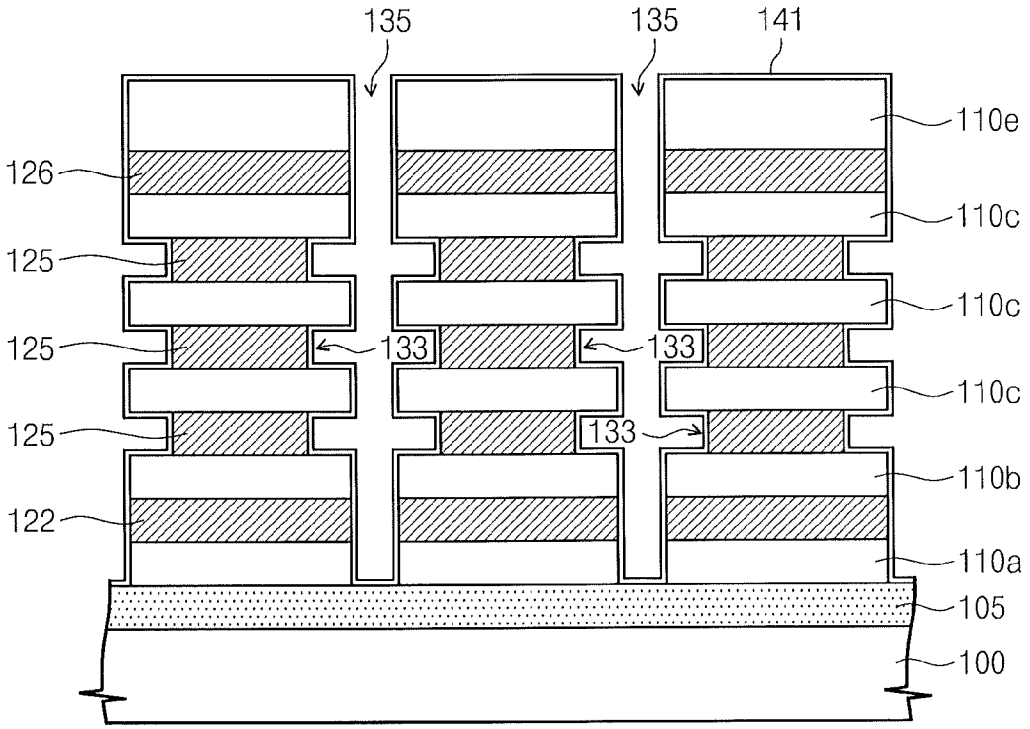
135
135
141
110e
126
110c
125
110c
125
133
133
110c
125
133
110b
122
110a
105
100

Fig. 27

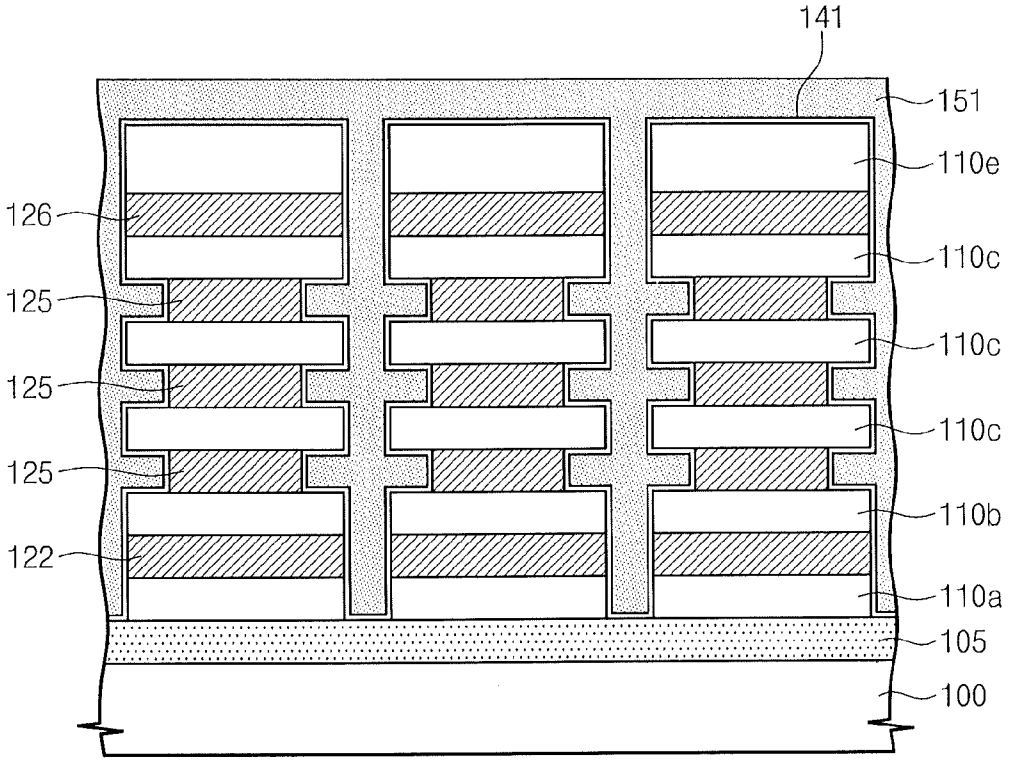
141
151
110e
126
110c
125
110c
125
110c
125
110b
122
110a
105
100

Fig. 28

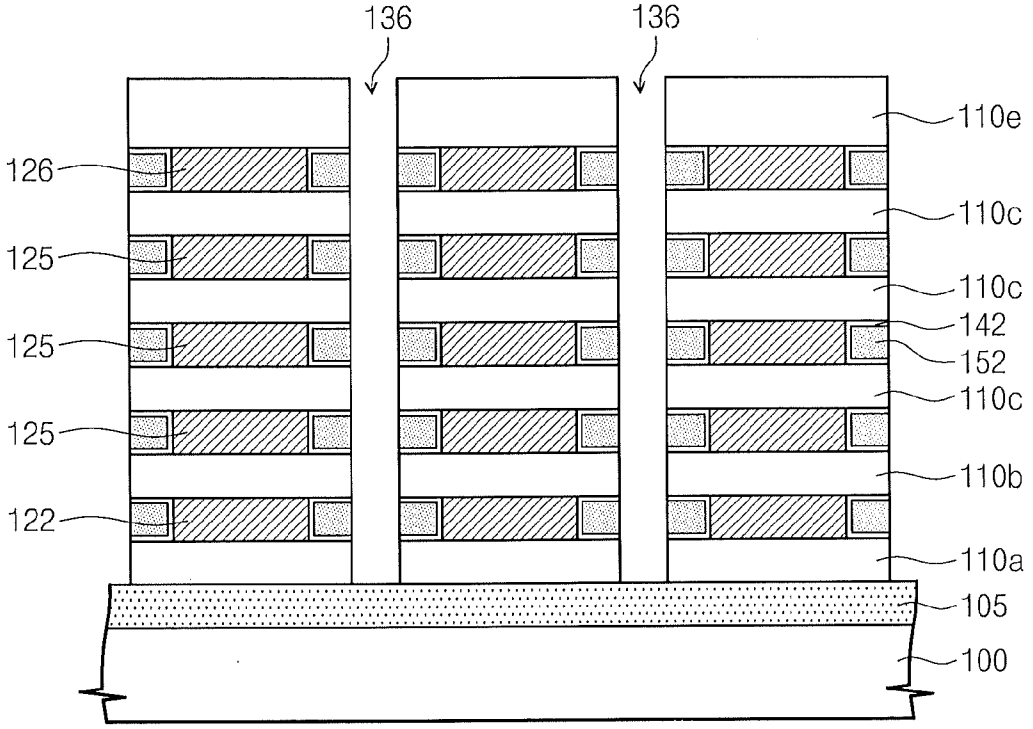
136
136
110e
126
110c
125
110c
142
125
152
110c
125
110b
122
110a
105
100

Fig. 29

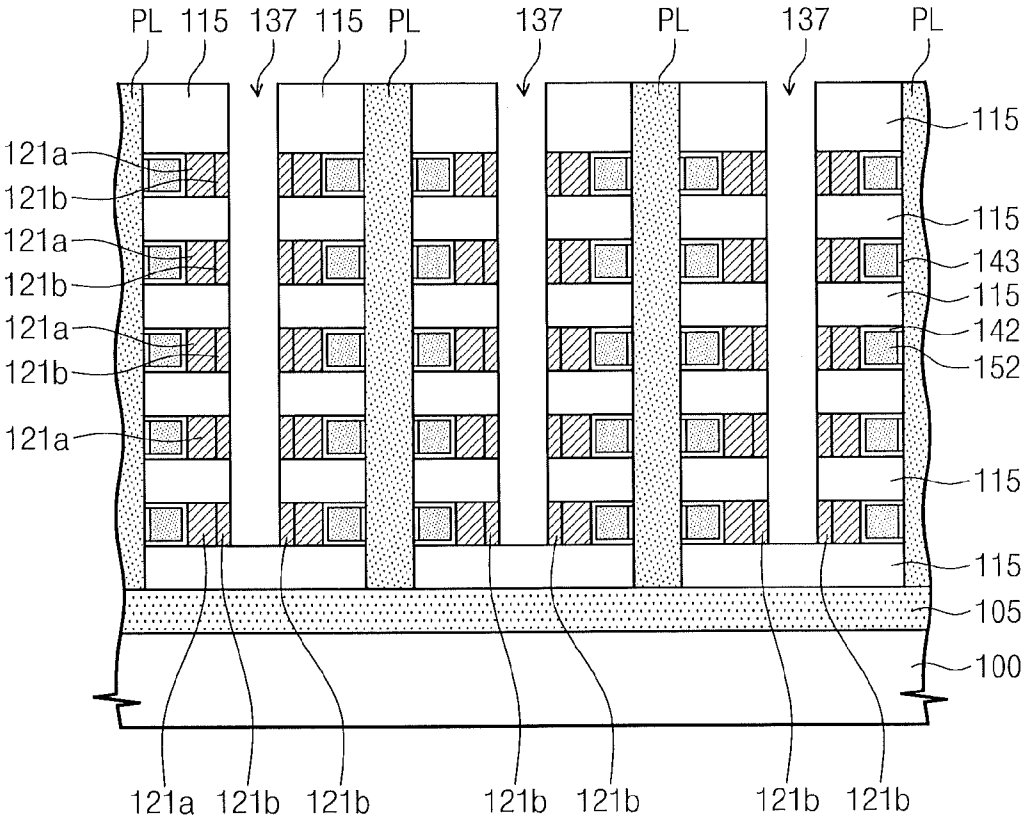
PL
115
137
115
PL
137
PL
137
PL
121a
121b
121a
121b
121a
121b
121a
115
115
143
115
142
152
115
115
105
100
121a
121b
121b
121b
121b
121b
121b

Fig. 30

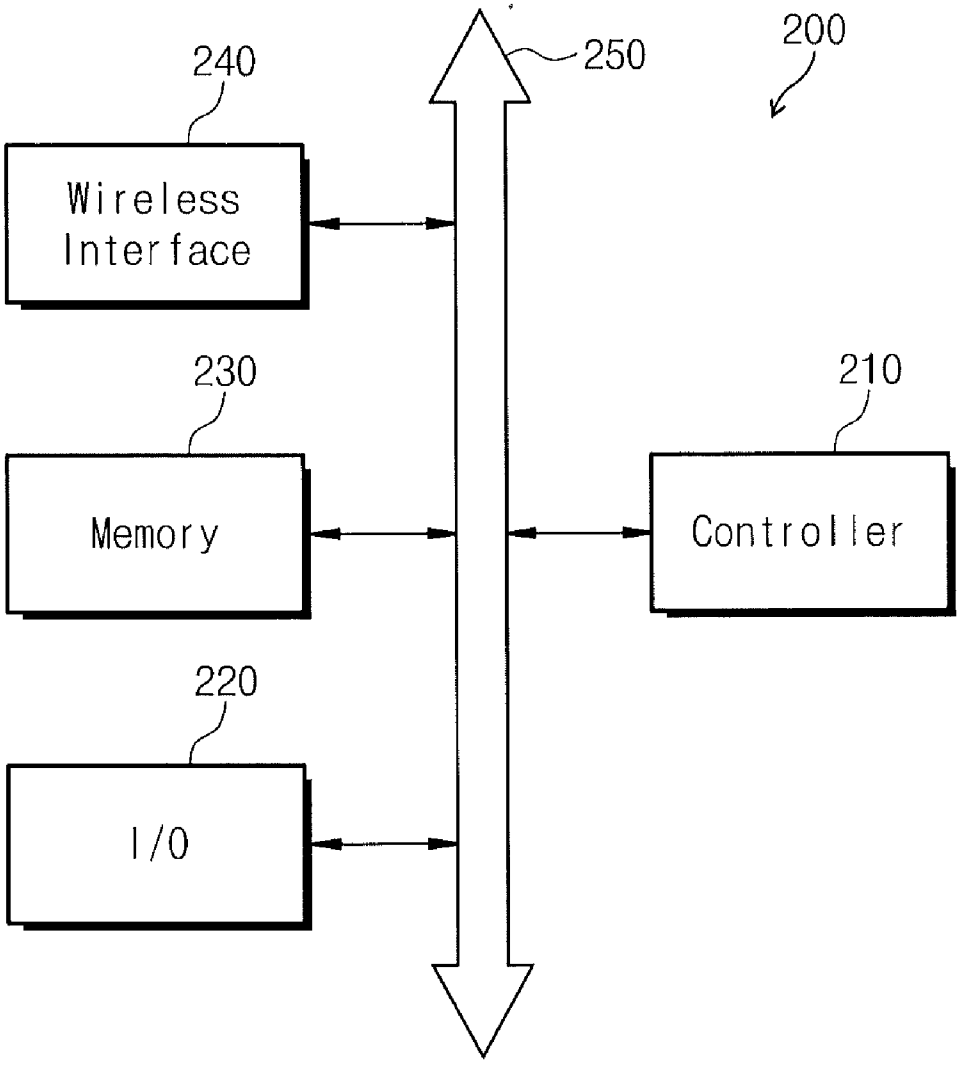
240
Wireless Interface
250
200
230
Memory
210
Controller
220
I/O

Fig. 31

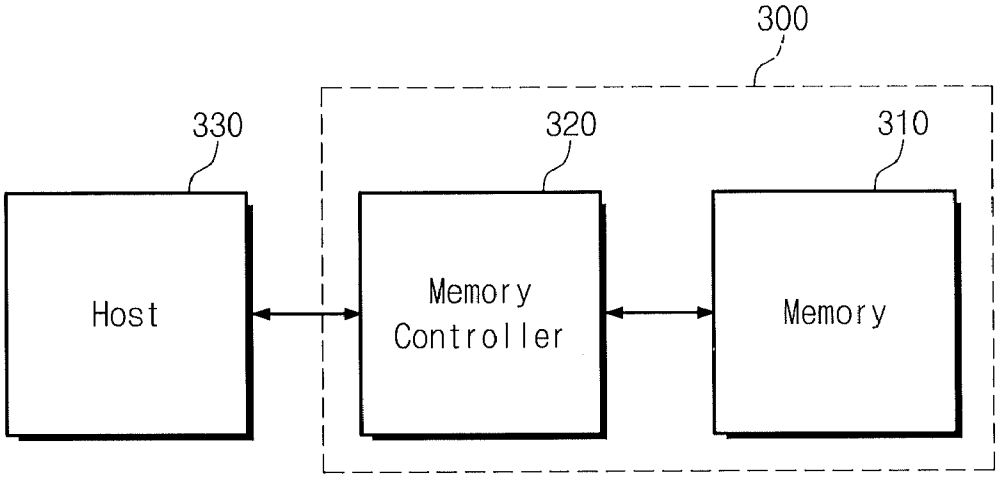

METHODS OF FABRICATING THREE-DIMENSIONAL NONVOLATILE MEMORY DEVICES USING EXPANSIONS

CROSS-REFERENCE TO RELATED APPLICATION

[0001] This U.S. application claims priority under 35 U.S.C. §119 to Korean Patent Application 10-2009-0023626, filed on Mar. 19, 2009, the disclosure of which is hereby incorporated herein by reference in its entirety as if set forth fully herein.

BACKGROUND

[0002] The present disclosure herein relates to three-dimensional nonvolatile memory devices and methods of fabricating the same.

[0003] Microelectronic devices are widely used in many consumer, commercial and other applications. As the integration density of microelectronic devices continues to increase, three-dimensional microelectronic devices may be fabricated, wherein active devices, such as transistors, are stacked on a microelectronic substrate, such as an integrated circuit substrate.

[0004] In particular, memory devices are widely used for general storage and transfer of data in computers and other digital products. In some memory devices, a string of memory cells are connected in series. Moreover, in order to increase the integration density of memory devices, three-dimensional or vertical memory devices have been developed, wherein a string of serially connected memory cells is formed by the memory cells vertically being stacked on a face of a substrate, wherein a first memory cell in the string of serially connected memory cells is adjacent the face of the substrate and a last memory cell in the string of serially connected memory cells is remote from the face of the substrate. As used herein, and as conventionally used, the "vertical" direction is generally orthogonal to the face of the substrate, whereas the "horizontal" direction is generally parallel to (extending along) the face of the substrate. By vertically stacking the memory cells to form the string, increased integration density may be provided. These vertically stacked structures may also be referred to as "three-dimensional" memory devices.

SUMMARY

[0005] The present disclosure relates to three-dimensional nonvolatile memory devices that can have excellent reliability and methods of fabricating the same by simple processes.

[0006] Embodiments of the inventive concept provide methods of fabricating three-dimensional nonvolatile memory devices. These methods include: forming openings penetrating interlayer insulating layers and conductive layers stacked alternately on a substrate; forming expansions having a diameter wider than that of the openings penetrating the interlayer insulating layers by selectively recessing sidewalls of the conductive layers exposed by the openings; forming first insulating layers on surfaces of the conductive layers exposed by the expansions; forming floating gates disposed in the expansions interposing the first insulating layers; forming second insulating layers on surfaces of the floating gates adjacent to the openings; and forming semiconductor pillars filling the openings.

[0007] In some embodiments, the forming of the expansions may include: isotropically etching the conductive layers so as to selectively etch the conductive layers more than the substrate and the interlayer insulating layers, and the forming of the floating gates may include: forming buried conductive layers filling the openings and the expansions; and anisotropically etching the buried conductive layers to expose an upper surface of the substrate.

[0008] In other embodiments, the forming of the first insulating layers and the second insulating layers may include performing an oxidation process or deposition process.

[0009] In still other embodiments, the methods may further include: forming sequentially stacked lower interlayer insulating layers and lower conductive layers including lower openings provided with sidewalls to be connected successively to the openings on the substrate, before forming the openings.

[0010] In yet other embodiments, the methods may further include: isolating the interlayer insulating layers and the conductive layers from each other between the semiconductor pillars; and forming silicide layers on surfaces of the isolated conductive layers.

[0011] According to other embodiments, three-dimensional nonvolatile memory devices may be fabricated by forming openings penetrating interlayer insulating layers and conductive layers stacked alternately on a substrate. Then, the sidewalls of the conductive layers that are exposed by the openings are recessed relative to the sidewalls of the interlayer insulating layers that are exposed by the openings, to thereby define expansions between portions of adjacent insulating layers that are exposed by the recessing of the sidewalls of the conductive layers. In some embodiments, the expansions are ring-shaped expansions surrounding the openings. Floating gates are then form in the expansions. Semiconductor pillars are then formed in the openings to extend on the floating gates and on the sidewalls of the interlayer insulating layers.

[0012] In some embodiments, between the recessing of the sidewalls and the forming of the floating gates, an insulating layer is formed on the sidewalls of the conductive layers. Moreover, between the forming of the floating gates and the forming of the semiconductor pillars, an insulating layer may be formed on the floating gates, adjacent the openings. Two separate insulating layers may also be formed in some embodiments.

[0013] In yet other embodiments, the sidewalls are recessed by selectively etching the sidewalls of the conductive layers that are exposed by the openings relative to the sidewalls of the interlayer insulating layers that are exposed by the openings. Moreover, in some embodiments, the floating gates may be formed in the expansions by forming a conductive layer in the openings and in the expansions, and removing the conductive layer from the openings while allowing the conductive layer to remain in the expansions.

[0014] In still other embodiments, prior to forming the openings, lower insulating layers and lower conductive layers are sequentially stacked upon one another on the substrate. Lower openings are formed penetrating the lower insulating layers and the lower conductive layers. Moreover, when the openings are formed in the interlayer insulating layers and conductive layers, they are aligned to the lower openings.

[0015] In yet other embodiments, a silicide layer is also formed on sidewalls of the floating gates opposite the semiconductor pillars. In some embodiments, prior to forming the silicide layer, a conductive layer may be formed on the sidewalls of the floating gates opposite the semiconductor pillars.

[0016] Embodiments of the inventive concept also provide three-dimensional nonvolatile memory devices, including: semiconductor pillars penetrating interlayer insulating layers and conductive layers alternately stacked on a substrate and electrically connected to the substrate; floating gates electrically isolated by the interlayer insulating layers and locally interposed between the semiconductor pillars and the conductive layers; first insulating layers interposed between the floating gates and adjacent sidewalls of the conductive layers; and second insulating layers interposed between the floating gates and the semiconductor pillars.

[0017] In some embodiments, the floating gates may be interposed between the interlayer insulating layers adjacent to each other, and the first insulating layers may be disposed between the floating gates and the interlayer insulating layers by extending from the floating gates and the sidewalls of the conductive layers.

[0018] In other embodiments, the second insulating layers may surround the semiconductor pillars by vertically extending to sidewalls of the interlayer insulating layers from sidewalls of the floating gates.

[0019] In still other embodiments, the conductive layers may include selection line conductive layers, the second insulating layers may be interposed between the selection line conductive layers and the semiconductor pillars, and the selection line conductive layers may come in directly contact with the second insulating layers.

[0020] In yet other embodiments, each of the conductive layers may have a multi-layered structure disposed in parallel between adjacent interlayer insulating layers.

BRIEF DESCRIPTION OF THE DRAWINGS

[0021] The accompanying drawings are included to provide a further understanding of the inventive concept, and are incorporated in and constitute a part of this specification. The drawings illustrate example embodiments of the inventive concept and, together with the description, serve to explain principles of the inventive concept. In the drawings:

[0022] FIG. **1** is a circuit diagram of nonvolatile memory devices according to embodiments of the inventive concept;

[0023] FIGS. **2**, **4**, **6**, and **8** are cross-sectional views of nonvolatile memory devices according to various embodiments of the inventive concept, respectively;

[0024] FIGS. **3**, **5**, **7**, and **9** are perspective views of nonvolatile memory devices according to various embodiments of the inventive concept, respectively;

[0025] FIGS. **10** through **16** are cross-sectional views illustrating methods of fabricating a nonvolatile memory device according to some embodiments of the inventive concept, respectively;

[0026] FIGS. **17** and **18** are cross-sectional views illustrating methods of fabricating a nonvolatile memory device according to other embodiments of the inventive concept, respectively;

[0027] FIGS. **19** through **28** are cross-sectional views illustrating methods of fabricating a nonvolatile memory device according to further embodiments of the inventive concept, respectively;

[0028] FIG. **29** is a cross-sectional view illustrating methods of fabricating a nonvolatile memory device according to still further embodiments of the inventive concept;

[0029] FIG. **30** is a block diagram illustrating schematically an electronic device including nonvolatile memory devices according to various embodiments of the inventive concept; and

[0030] FIG. **31** is a block diagram illustrating a memory system including nonvolatile memory devices according to various embodiments of the inventive concept.

DETAILED DESCRIPTION OF PREFERRED EMBODIMENTS

[0031] The present invention now will be described more fully hereinafter with reference to the accompanying drawings, in which various embodiments are shown. However, this invention should not be construed as limited to the embodiments set forth herein. Rather, these embodiments are provided so that this disclosure will be thorough and complete, and will fully convey the scope of the invention to those skilled in the art. In the drawings, the thickness of layers and regions may be exaggerated for clarity. Like numbers refer to like elements throughout. As used herein the term "and/or" includes any and all combinations of one or more of the associated listed items and may be abbreviated as "/".

[0032] The terminology used herein is for the purpose of describing particular embodiments only and is not intended to be limiting of the invention. As used herein, the singular forms "a," "an" and "the" are intended to include the plural forms as well, unless the context clearly indicates otherwise. It will be further understood that the terms "comprises," "comprising," "having," "having," "includes," "including" and/or variations thereof, when used in this specification, specify the presence of stated features, regions, steps, operations, elements, and/or components, but do not preclude the presence or addition of one or more other features, regions, steps, operations, elements, components, and/or groups thereof.

[0033] It will be understood that when an element such as a layer or region is referred to as being "on" or extending "onto" another element (and/or variations thereof), it can be directly on or extend directly onto the other element or intervening elements may also be present. In contrast, when an element is referred to as being "directly on" or extending "directly onto" another element (and/or variations thereof), there are no intervening elements present. It will also be understood that when an element is referred to as being "connected" or "coupled" to another element (and/or variations thereof), it can be directly connected or coupled to the other element or intervening elements may be present. In contrast, when an element is referred to as being "directly connected" or "directly coupled" to another element (and/or variations thereof), there are no intervening elements present.

[0034] It will be understood that, although the terms first, second, etc. may be used herein to describe various elements, components, regions, layers and/or sections, these elements, materials, regions, layers and/or sections should not be limited by these terms. These terms are only used to distinguish one element, material, region, layer or section from another element, material, region, layer or section. Thus, a first element, material, region, layer or section discussed below could be termed a second element, material, region, layer or section without departing from the teachings of the present invention.

[0035] Relative terms, such as "lower", "back", and "upper" may be used herein to describe one element's relationship to another element as illustrated in the Figures. It will be understood that relative terms are intended to encompass

different orientations of the device in addition to the orientation depicted in the Figures. For example, if the structure in the Figure is turned over, elements described as being on the "backside" of substrate would then be oriented on "upper" surface of the substrate. The exemplary term "upper", can therefore, encompasses both an orientation of "lower" and "upper," depending on the particular orientation of the figure. Similarly, if the structure in one of the figures is turned over, elements described as "below" or "beneath" other elements would then be oriented "above" the other elements. The exemplary terms "below" or "beneath" can, therefore, encompass both an orientation of above and below. However, as used herein, and as conventionally used, the "vertical" direction is generally orthogonal to the face of the substrate regardless of its orientation, whereas the "horizontal" direction is generally parallel to (extending along) the face of the substrate.

[0036] Embodiments of the present invention are described herein with reference to cross section and perspective illustrations that are schematic illustrations of idealized embodiments of the present invention. As such, variations from the shapes of the illustrations as a result, for example, of manufacturing techniques and/or tolerances, are to be expected. Thus, embodiments of the present invention should not be construed as limited to the particular shapes of regions illustrated herein but are to include deviations in shapes that result, for example, from manufacturing. For example, a region illustrated or described as flat may, typically, have rough and/or nonlinear features. Moreover, sharp angles that are illustrated, typically, may be rounded. Thus, the regions illustrated in the figures are schematic in nature and their shapes are not intended to illustrate the precise shape of a region and are not intended to limit the scope of the present invention.

[0037] Unless otherwise defined, all terms (including technical and scientific terms) used herein have the same meaning as commonly understood by one of ordinary skill in the art to which this invention belongs. It will be further understood that terms, such as those defined in commonly used dictionaries, should be interpreted as having a meaning that is consistent with their meaning in the context of the relevant art and the present disclosure, and will not be interpreted in an idealized or overly formal sense unless expressly so defined herein.

[0038] FIG. **1** is a circuit diagram illustrating three-dimensional nonvolatile memory devices according to various embodiments of the inventive concept.

[0039] Referring to FIG. **1**, a nonvolatile memory device according to some embodiments of the inventive concept includes a cell array having a plurality of strings STRs. The cell array includes a plurality of bit lines BL**1** to BL**4**, word lines WL**1** to WL**3**, upper selection lines USL**1** to USL**3**, a lower selection line LSL, and a common source line CSL. In addition, the nonvolatile memory device includes a plurality of strings STRs between the bit lines BL**1** to BL**4** and the common source line CSL.

[0040] Each of the strings STRs includes upper and lower selection transistors UST and LST and a plurality of memory cell transistors MC connected between the upper and lower selection transistors UST and LST in series. A drain of the upper selection transistor UST is connected to the bit lines BL**1** and BL**4**, and a source of the lower selection transistor LST is connected to the common source line CSL. The common source line CSL is a line to which the sources of the lower selection transistors LSTs are connected in common.

[0041] Further, the upper selection transistors USTs are connected to the upper selection lines USL**1** and USL**3**, and each of the lower selection transistors LSTs is connected to the lower selection line LSL. In addition, each of memory cells MCs is connected to word lines WL**1** to WL**3**.

[0042] Since the above-mentioned cell array is arranged in the three-dimensional structure, the strings STRs have a structure in which the memory cells MCs are connected to each other in series in a Z-axis direction perpendicular to X-Y plane in parallel to the upper surface of a substrate. Accordingly, channels of the selection transistors UST and LST and channels of the memory cell transistors MCs may be formed in a direction perpendicular to X-Y plane.

[0043] In the three-dimensional nonvolatile memory device, m memory cells may be formed in each X-Y plane, and X-Y plane having the m memory cells may be stacked with n layers (where, m and n are natural numbers).

[0044] Nonvolatile memory devices according to various embodiments of the inventive concept will be described below with reference to FIGS. **2** through **9**.

[0045] A nonvolatile memory device according to first embodiments of the inventive concept will be described.

[0046] Referring to FIGS. **2** and **3**, interlayer insulating layers **110** (see FIG. **2**) and conductive layers LSL WL, and USL may alternately be stacked on a substrate **100**, repeatedly. The substrate **100** may be a semiconductor substrate including an impurity region **105** (for example, well region) used as a common source line CSL (see FIG. **1**). Out of the conductive layers LSL, WL, and USL, the uppermost layer may be used as an upper selection line USL, the lowermost layer may be used as a lower selection line LSL, and remaining conductive layers may be used as word lines WLs. The conductive layers may be made of a conductive poly silicon and/or metal material.

[0047] The lower selection line LSL may be formed in a plate shape or a line shape separated from each other. The upper selection line USL may be formed in a line shape separated from each other. The word lines are located between the upper selection line USL and the lower selection line LSL. The word lines may be a plate shape. Since the word lines are formed in the plate shape on each layer, the same voltage may be applied to the word lines of the memory cells formed on the same layer.

[0048] In addition, the word lines WLs formed at an upper part may have a relatively small area compared to the word lines WLs formed at a lower part. That is, the stacked structure of the interlayer insulating layers **110** (see FIG. **2**) and the conductive layers LSL, WL, and USL may have a staircase-shaped edge.

[0049] A plurality of semiconductor pillars PLs may be disposed on the substrate **100**. The plurality of semiconductor pillars PLs penetrates the stacked interlayer insulating layers **110** and conductive layers LSL, WL, and USL. The semiconductor pillars PLs may be electrically connected to the impurity region **105** included in the substrate **100**. The semiconductor pillars PLs are spaced from one another and may be arranged in the form of a planar matrix. The semiconductor pillars PLs are formed of a semiconductor material. Moreover, the semiconductor pillars PLs may correspond to each string of the nonvolatile memory device. Channels of the selection transistors and memory cell transistors of each string may be electrically connected to each other through the semiconductor pillars PLs. The semiconductor pillars PLs may be a cylindrical shape but are not limited thereto. The

semiconductor pillars PLs may have the same conductivity as a whole. At least, surfaces of the semiconductor pillars PLs may have the same conductivity. Channels of the nonvolatile memory devices according to the embodiments of the inventive concept may be formed in the semiconductor pillars PLs.

[0050] Floating gates FGs may be interposed between sides of the semiconductor pillars PLs and the word lines WLs. Furthermore, the floating gates FGs may be interposed between the interlayer insulating layers **110** (see FIG. **2**) adjacent to each other. That is, the floating gates FGs may be spaced from each other by the interlayer insulating layers **110** (see FIG. **2**). For instance, the floating gates FGs may surround the semiconductor pillars PLs in the form of a doughnut or ring between the interlayer insulating layers **110** (see FIG. **2**). At this time, a gate insulating layer **143** may selectively be interposed between the side of the semiconductor pillar PL and the floating gates FGs. Except for a surface coming in contact with the gate insulating layer **143**, the remaining surface of the floating gate FG may be surrounded by an inter-gate dielectric layer IGD. That is, the inter-gate dielectric layer IGD may be interposed between the floating gate FG and the word line WL and between the floating gate FG and the interlayer insulating layer **110** (see FIG. **2**).

[0051] The gate insulating layer **143** may be interposed between the semiconductor pillar PL and a selection line pattern SLP. The selection line pattern SLP may be surrounded by a middle gate dielectric layer MGD, similar to the floating gate FG is surrounded by the inter-gate dielectric layer IGD. The selection line pattern SLP may be made of the same material as the floating gate FG.

[0052] Accordingly, the gate insulating layers **143** surround the semiconductor pillars PLs, but may be spaced from the floating gates FGs.

[0053] Bit lines BLs may be formed on upper surfaces of the semiconductor pillars PLs to electrically connect with the semiconductor pillars PLs. The bit lines BLs may be disposed to intersect with the upper selection lines USLs. At this time, each of the semiconductor pillars PLs may be disposed at places where the bit lines BLs and the upper selection lines USLs are intersected with each other.

[0054] A perpendicular interval between the floating gates FGs may be adjusted depending on a thickness of the interlayer insulating layer. In addition, the thickness of the interlayer insulating layer may be determined not by a patterning process but by a thin film forming process. Therefore, the thickness of the interlayer insulating layer may be thinner than a limit of a patterning resolution. As a result, according to these embodiments of the inventive concept, the nonvolatile memory device including the floating gates may be operated using a fringe field. As described above, all of the semiconductor pillars according to this embodiment of the inventive concept may have the same impurity type. Furthermore, the impurity type of the semiconductor pillars according to this embodiment of the inventive concept may be a conductivity type opposite to the impurity type pf the floating gates.

[0055] A nonvolatile memory device according to a second embodiments of the inventive concept will be described below with reference to FIGS. **4** and **5**. Hereinafter, with respect to the nonvolatile memory device according to the first embodiment of the inventive concept, same or similar components will be omitted or briefly described, and different components (e.g., gate insulating layer and inter-gate dielectric layer) will be described.

[0056] Referring to FIGS. **4** and **5**, the gate insulating layer **143** may be interposed between the side of the semiconductor pillar PL and the floating gates FGs and interposed between the side of the semiconductor pillar PL and the interlayer insulating layer **110** (see FIG. **4**). That is, the gate insulating layer **143** may extend along the side of the semiconductor pillar PL to surround the entire side of the semiconductor pillar PL.

[0057] Except for a surface coming in contact with the gate insulating layer **143**, the remaining surface of the floating gate FG may be surrounded by the inter-gate dielectric layer IGD. The inter-gate dielectric layer IGD may be configured to have a plurality of layers IGD**1**, IGD$\mathbf{2}_1$, and IGD$\mathbf{2}_2$. According to other embodiments of the inventive concept, the inter-gate dielectric layer IGD may be configured to have a multi-layered structure only between the floating gate FG and the word lines WLs.

[0058] The selection line pattern SLP may be surrounded by the middle gate dielectric layer MGD including double layers MGD**1** and MGD**2** in a similar manner as the floating gate FG.

[0059] A three-dimensional nonvolatile memory device will be described below with reference to FIGS. **6** and **7**. Hereinafter, with respect to the nonvolatile memory device according to the first and second embodiments of the inventive concept, same or similar components will be omitted or briefly described, and different components (e.g., selection line layer) will be described.

[0060] Referring to FIGS. **6** and **7**, the floating gates FGs may selectively be interposed only between the side of the semiconductor pillar PL and the word lines WLs. In addition, the floating gates FGs are interposed between the interlayer insulating layers **110** (see FIG. **6**) adjacent to each other and may perpendicularly be spaced from one another along the semiconductor pillar PL. At this time, the gate insulating layer **143** may locally be interposed between the side of the semiconductor pillar PL and the floating gates FGs. Alternatively, the gate insulating layer **143** may extend along the side of the semiconductor pillar PL. Except for a surface coming in contact with the gate insulating layer **143**, the remaining surface of the floating gate FG may be surrounded by the inter-gate dielectric layer IGD. The inter-gate dielectric layer IGD may have a stacked structure of oxide/nitride/oxide (IGD**1**/IGD**2**/IGD**3**).

[0061] The gate insulating layer **143** may be only interposed between the selection lines USL and LSL and the semiconductor pillar PL. That is, unlike FIG. **2** or FIG. **4**, the memory device of FIG. **6** may not include a different conductivity pattern such as a floating gate between the selection lines USL and LSL and the semiconductor pillar PL.

[0062] A three-dimensional nonvolatile memory device will be described below with reference to FIGS. **8** and **9**. Hereinafter, with respect to the nonvolatile memory devices according to the first to third embodiments of the inventive concept, same or similar components will be omitted or briefly described, and different components (e.g., selection line layer) will be described.

[0063] Referring to FIGS. **8** and **9**, interlayer insulating patterns **115** and conductive line patterns LSL, WL, and USL may alternately be stacked on a substrate **100**, repeatedly. Out of the conductive line patterns LSL, WL, and USL, the uppermost layer may be used as an upper selection line USL, the

lowermost layer may be used as a lower selection line LSL, and remaining conductive line patterns may be used as word lines WLs.

[0064] The conductive line patterns LSL, WL, and USL may be a line shape extending in the same direction. One stack constituted by the conductive line patterns LSL, WL, and USL may be isolated from a neighboring stack. At this time, the conductive line patterns used as word lines WLs may be connected to each other on the same layer such that the same voltage is applied thereto.

[0065] Line-shaped isolation insulating pattern **180** may be disposed between the adjacent conductive line patterns LSL, WL, and USL.

[0066] A plurality of semiconductor pillars PLs, which penetrate the stacked interlayer insulating patterns **115** and the conductive line patterns LSL, WL, and USL, may be disposed on the substrate **100**. The semiconductor pillars PLs may be spaced from each other in a row between the adjacent isolation insulating patterns **180**. The semiconductor pillars PLs may arranged in the form of a planar matrix.

[0067] Silicide layers **121***b* may be interposed into interfaces between the isolation insulating patterns **180** and the conductive line patterns LSL, WL, and USL. The silicide layers **121***b* may locally be disposed at the surface of the conductive line patterns LSL, WL, and USL coming in contact with the isolation insulating patterns **180**.

[0068] Methods of fabricating the three-dimensional nonvolatile memory devices according to the embodiments of the inventive concept will be described below.

[0069] FIGS. **10** through **16** illustrate methods of fabricating a three-dimensional nonvolatile memory device according to first embodiments of the inventive concept.

[0070] Referring to FIG. **10**, interlayer insulating layers **110** and conductive layers **120** may alternately be stacked on a substrate **100**, repeatedly. The substrate **100** may include an impurity region **105** (for example, well region). Out of the stacked layers **110** and **120**, the uppermost layer may be an interlayer insulating layer. The number of stacked conductive layers may be changed by the capacity of the nonvolatile memory device. The interval between the conductive layers **120** may be determined by adjusting the thickness of the interlayer insulating layers **110**.

[0071] The interlayer insulating layers **110** and the conductive layers **120** may be stacked in the form of a plate on a memory cell of the substrate **100**

[0072] At this time, with respect to the interlayer insulating layers **110** and the conductive layers **120**, the area may gradually reduce in the order in which the interlayer insulating layers **110** and the conductive layers **120** are stacked from the substrate **100**. For instance, edges of the interlayer insulating layers **110** and the conductive layers **120** may have a staircase shape. The interlayer insulating layers **110** and the conductive layers **120** may be formed by repeatedly carrying out a depositing process and a patterning process, respectively. Alternatively, after all of the interlayer insulating layers **110** and the conductive layers **120** are stacked, each layer may selectively be patterned layer-by-layer.

[0073] The interlayer insulating layers **110** may include a silicon oxide layer and/or a silicon nitride layer. The conductive layers **120** may include a lower conductive layer **122** and an upper conductive layer **126** that are sequentially stacked from the substrate **100**. A middle conductive layer **124** may be stacked between the lower conductive layer **122** and the upper conductive layer **126**. The lower conductive layer **122**, the upper conductive layer **126**, and the middle conductive layer **124** may have the same etch selectivity. For instance, the lower conductive layer **122**, the upper conductive layer **126**, and the middle conductive layer **124** may be formed of the same material. The conductive layers may contain polysilicon and/or metal material.

[0074] The upper conductive layer **126** may be patterned in the form of a line.

[0075] Referring to FIG. **11**, a plurality of first openings **131** may be formed by etching the stacked interlayer insulating layers **110** and the conductive layers **120**. The first openings **131** penetrate the stacked interlayer insulating layers **110** and the conductive layers **120**. For instance, a mask pattern (not illustrated) is formed on the uppermost layer of the interlayer insulating layers **110**, and an anisotropic etching is selectively performed on the interlayer insulating layers **110** and the conductive layers **120** exposed by the mask pattern. The impurity region **105** of the substrate **100** may be exposed to bottom faces of the first openings **131**, and the interlayer insulating layers **110** and the conductive layers **120** may be exposed to inner walls of the first openings **131**. The first openings **131** may be a circular type, and the diameter of the first openings **131** may be smaller than a horizontal distance between the adjacent first openings **131**. Furthermore, the first openings **131** may be provided in the form of a planar matrix.

[0076] Referring to FIGS. **11** and **12**, conductive patterns **121** may be formed by selectively recessing the conductive layers **120** exposed to the inner walls of the first openings **131**. For instance, an isotropic etching may be performed on the resulting structure of FIG. **11**. The isotropic etching may be performed such that the conductive layers **120** are selectively etched compared to other layers. The conductive patterns **121** may include a lower conductive pattern **123** and an upper conductive pattern **127** that are sequentially stacked from the substrate **100**. Middle conductive patterns **125** may be stacked between the lower conductive pattern **123** and the upper conductive pattern **127**. The middle conductive patterns **125** may be used as a control gate (or word line). When the conductive patterns **121** are formed, at the same time the inner walls of the first openings **131** constituted by the conductive layers **120** are selectively expanded. Consequently, second openings **132** may be formed.

[0077] The second openings **132** may have the same bottom face as the first openings **131**. Meanwhile, the inner walls of the second openings **132** may be constituted by the interlayer insulating layers **110** and the conductive patterns **121**. The second openings **132** may include expansions **133** surrounded by the adjacent interlayer insulating layers **110** and the conductive patterns **121** between the adjacent interlayer insulating layers **110**. The width or diameter of the expansions **133** may be larger than that of the openings surrounded by the interlayer insulating layers **110**. Accordingly, the expansions **133** may be viewed as expansions relative to the openings **132** or may be viewed as recesses relative to the interlayer insulating layers **110**. Stated differently, sidewalls of the conductive patterns **125** that are exposed by the openings **132** are recessed relative to sidewalls of the interlayer insulating layers **110** that are exposed by the openings, to thereby define expansions **133** between portions of adjacent insulating layers that are exposed by the recessing of the sidewalls of the conductive layers **127**.

[0078] Referring to FIG. **13**, a first insulating layer **141** may be formed on the resulting structure of FIG. **12**. The first

insulating layer **141** may conformally be formed on the resulting structure of FIG. **12**. That is, the first insulating layer **141** may be formed along the inner walls and the bottom faces of the second openings **132**. At this time, the first insulating layer **141** may be formed on the surfaces of the interlayer insulating layers **110** and the conductive patterns **121** exposed to the inner faces of the expansions **133**. The first insulating layer **141** may be a single layer or multiple layers. The first insulating layer **141** may be a composite layer of oxide/nitride/oxide. According to another embodiment of the inventive concept, the first insulating layer **141** may be formed of high dielectric constant materials.

[0079] The first insulating layer **141** may be formed by a deposition. For instance, the first insulating layer **141** may be formed by an atomic layer deposition (including modified process of atomic layer deposition) and/or a chemical vapor deposition (including modified processes such as Low Pressure Chemical Vapor Deposition and Plasma Enhanced Chemical Vapor Deposition).

[0080] Referring to FIG. **14**, a buried conductive layer **151** may be formed to fill the inside of the second openings **132**. The buried conductive layer **151** may fill the expansions **133**. The buried conductive layer **151** may be formed to cover the uppermost layer of the interlayer insulating layers. The buried conductive layer **151** may be formed of a conductive polysilicon.

[0081] Referring to FIG. **15**, third openings **134** may be formed by performing the anisotropic etching with respect to the buried conductive layer **151**. The anisotropic etching may be performed using the interlayer insulating layers **110** as an etching mask. The anisotropic etching may be performed to expose the upper surface of the substrate **100**. Hereby, since a part of the buried conductive layer **151** remains in the expansions **133**, buried conductive patterns **152** may be formed. In addition, since the first insulating layer **141** formed on the inner walls of the second openings **132**, except for the expansions **133**, is selectively removed by the anisotropic etching, first insulating patterns **142** may locally be formed in the expansions **133**. Accordingly, the interlayer insulating layers **110** and the buried conductive patterns **152** may be exposed to the inner walls of the third openings **134**. At this time, the first insulating patterns **142** may surround other surfaces of the buried conductive patterns **152** except for the side exposed to the inner walls of the third openings **134**.

[0082] Alternatively, a planarization process may be performed on the buried conductive layer **151** to expose the upper surface of the uppermost layer of the interlayer insulating layers **110**. Subsequently, a mask pattern (not illustrated) may be formed on the uppermost layer of the interlayer insulating layers **110** to expose the buried conductive layer **151** formed in the second openings **132**. The anisotropic etching may selectively be performed on the buried conductive layer **151** using the mask pattern as an etching mask. After the buried conductive layer **151** is etched, the third openings **134** may be formed by removing the first insulating layer **141** formed on the bottom face of the exposed second openings **132**. At this time, the first insulating layer **141** may remain on the sidewalls of the third openings **134**. That is, the first insulating patterns **142**, which surround the buried conductive patterns of different layers, may be connected to each other along the inner walls of the third openings **134**.

[0083] Referring to FIG. **16**, an oxidation process may be performed on the resulting structure of FIG. **15**. The oxidation process may be a thermal oxidation. Through the oxidation, an oxide layer may be formed on the surfaces of the buried conductive patterns **152** exposed to the inner walls of the third openings **134**. At this time, the upper surface of the substrate **100**, which is exposed to the bottom faces of the third openings **134**, may be also oxidized. The oxide layer formed on the bottom faces of the third openings **134** may be removed by the anisotropic etching. As a result, a gate insulating layer **143** may selectively be formed on the surface of the buried conductive patterns **152** exposed to the inner walls of the third openings **134**. The gate insulating layer **143** may be also formed by a radical oxidation process.

[0084] The third openings **134** may be filled with semiconductor materials. At this time, the uppermost layer of the interlayer insulating layers **110** may be covered with the semiconductor materials. The uppermost layer of the interlayer insulating layers **110** is exposed by the planarization process, and the semiconductor pillars PLs may then be formed in the third openings **134**. The semiconductor materials may include polycrystalline or single crystalline semiconductor.

[0085] The bit lines BLs may be formed on the semiconductor pillars PLs. A conductive layer is formed on the semiconductor pillars PLs and the uppermost layer of the interlayer insulating layers **110**. The bit lines BLs may then be formed by patterning the conductive layer. For this reason, the semiconductor pillars PLs may electrically be connected to the bit lines BLs.

[0086] FIGS. **17** and **18** illustrate methods of fabricating a three-dimensional nonvolatile memory device according to second embodiments of the inventive concept. With respect to the method of fabricating the three-dimensional nonvolatile memory device according to the first embodiment of the inventive concept, same or similar components will be omitted or briefly described.

[0087] Referring to FIG. **17**, a first insulating layer **141** may be formed on the resulting structure of FIG. **12**. The first insulating layer **141** may be double layers. The first insulating layer **141** may include a first sub-insulating layer **144** and a second sub-insulating layer **145**. The first sub-insulating layer **144** may be formed by an oxidation process. Accordingly, the first sub-insulating layer **144** may selectively be formed on the exposed surface of the conductive patterns **121**. Moreover, the upper surface of the substrate **100** may be oxidized by the oxidation process.

[0088] The second sub-insulating layer **145** may conformally be formed on the resulting structure. That is, the second sub-insulating layer **145** may be formed along the inner walls of the second openings **132**, the expansions **133**, and the bottom faces of the second openings **132**. The second sub-insulating layer **145** may be formed of high dielectric constant materials. The second sub-insulating layer **145** may be formed by a deposition. As a result, the first sub-insulating layer **144** and the second sub-insulating layer **145** may selectively be stacked on the exposed surface of the conductive patterns **121**.

[0089] Referring to FIG. **18**, as described above, the buried conductive patterns **152** containing a conductive polysilicon are formed in the expansions **133**, and the third openings **134** may be formed. In this case, the buried conductive patterns **152** correspond to the sides of the third openings **134**. Furthermore, since the second sub-insulating layer **145** formed on the inner walls of the third openings **134**, except for the expansions **133**, is selectively removed by the anisotropic etching, second sub-insulating patterns **146** may be formed in

the expansions **133**. Accordingly, the interlayer insulating layers **110** and the buried conductive patterns **152** may be exposed to the inner walls of the third openings **134**. At this time, the second sub-insulating patterns **146** may surround other surfaces of the buried conductive patterns **152** except for the side exposed to the inner walls of the third openings **134**.

[0090] Alternatively, the second sub-insulating patterns **146**, which surround the buried conductive patterns of different layers, may be connected to each other along the inner walls of the third openings **134**.

[0091] The gate insulating layer **143** may selectively be formed on the inner walls of the third openings **134**. The gate insulating layer **143** may be formed by a deposition and an anisotropic etching. For instance, the gate insulating layer **143** may be formed by an atomic layer deposition (including modified process of atomic layer deposition) and/or a chemical vapor deposition (including modified processes such as Low Pressure Chemical Vapor Deposition and Plasma Enhanced Chemical Vapor Deposition). The insulating layer may conformally be formed on the resulting structure by the deposition. Subsequently, through the anisotropic etching, it can remove the insulating layer formed on the bottom faces of the third openings **134** and the uppermost layer of the interlayer insulating layers **110**.

[0092] Referring back to FIG. **4**, the semiconductor pillars PLs may be formed in the third openings **134**. The semiconductor pillars PLs may have the upper surfaces that are substantially equal to the uppermost layer of the interlayer insulating layers **110** in height. The semiconductor materials may include polycrystalline and/or single crystalline semiconductor. The bit lines BLs may be formed on the semiconductor pillars PLs.

[0093] FIGS. **19** through **29** illustrate methods of fabricating a three-dimensional nonvolatile memory device according to third embodiments of the inventive concept.

[0094] Referring to FIG. **19**, a lower interlayer insulating layer **110***a* and a lower conductive layer **122** may be stacked on the substrate **100** in this order. The substrate **100** may include the impurity region **105** (for example, well region).

[0095] Referring to FIG. **20**, a mask pattern (not illustrated) may be formed on the lower conductive layer **122**. The anisotropic etching may selectively be performed on the lower conductive layer **122** using the mask pattern as an etching mask. For this reason, lower openings **130***a* penetrating the lower conductive layer **122** may be formed. At this time, the lower openings **130***a* may be formed to expose the lower interlayer insulating layer **110***a* and the substrate **110**. The mask pattern may be removed.

[0096] Referring to FIG. **21**, a middle buried insulating layer **110***b* may be formed on the substrate **100** to fill the lower openings **130***a*. Middle conductive layers **124** and middle interlayer insulating layers **110***c* may alternately be stacked on the middle buried insulating layer **110***b*. Before the middle conductive layers **124** are formed, the middle buried insulating layer **110***b* may be planarized. The middle buried insulating layer **110***b* on the lower conductive layer **122** may have the same thickness as the middle interlayer insulating layer **110***c* on the middle conductive layer **124**.

[0097] Referring to FIG. **22**, a mask pattern (not illustrated) may be formed on the uppermost layer of the middle interlayer conductive layers **110***c*. The mask pattern may be formed using a mask equal to a photo mask used for forming the lower openings **130***a*. The anisotropic etching may selectively be performed on the middle conductive layers **124** and the middle interlayer insulating layers **110***c* using the mask pattern as an etching mask. For this reason, first middle openings **130***b* **130***a* may be formed to penetrate the middle conductive layers **124** and the middle interlayer insulating layers **110***c*. At this time, the anisotropic etching may be performed using the middle buried insulating layer **110***b* as an etch stop layer. An upper surface of the middle buried insulating layer **110***b* is exposed to the bottom face of the first middle openings **130***b*, and the middle conductive layers **124** and the middle interlayer insulating layers **110***c* may be exposed to the inner wall of the first middle openings **130***b*.

[0098] Referring to FIG. **23**, the middle conductive layers **124**, which are exposed to the inner wall of the first middle openings **130***b*, may selectively be recessed. For this reason, middle conductive patterns **125** may be formed. The middle conductive patterns **125** may be used as a control gate (or word line). At the same time, the inner walls of the first middle openings **130***b*, which are provided with the middle conductive layers **124**, may selectively be expanded. Consequently, second middle openings **130***c* may be formed. For instance, the isotropic etching may be performed on the resulting structure of FIG. **22**. The isotropic etching may be performed such that the middle conductive layers **124** are selectively etched compared to other layers.

[0099] The second middle openings **130***c* may have the same bottom face as the first middle openings **130***b*. Meanwhile, the inner walls of the second middle openings **130***c* may be provided with the middle interlayer insulating layers **110***c* and the middle conductive patterns **125**. The second middle openings **130***b* may include expansions **133** surrounded by the neighboring interlayer insulating layers **110** and the middle conductive patterns **125** between the neighboring interlayer insulating layers **110**. The diameter of the expansions **133** may be larger than that of the openings surrounded by the middle interlayer insulating layers **110***c*.

[0100] Referring to FIG. **24**, a sacrificial pattern **110***d* may be formed to fill the second middle openings **130***c*. At this time, the sacrificial pattern **110***d* may be formed to fill the expansions **133**. The sacrificial pattern **110***d* may be formed by the deposition and planarlization. The sacrificial pattern **110***d* may have the upper surface that is substantially equal to the uppermost layer of the middle interlayer insulating layers **110***c* in height. The sacrificial pattern **110***d* may be formed of materials having the etch selectivity with respect to the interlayer insulating layers **110** and the conductive layers **120**. For instance, the interlayer insulating layers **110** may contain a silicon nitride, the conductive layers **120** may contain a conductive polysilicon and/or metal, and the sacrificial pattern **110***d* may contain a silicon oxide.

[0101] An upper conductive layer **126** and an upper interlayer insulating layer **110***e* may sequentially be stacked on the sacrificial pattern **110***d* and the uppermost layer of the middle interlayer insulating layers **110***c*. The upper conductive layer **126** may be patterned in the form of a line.

[0102] Referring to FIG. **25**, a mask pattern (not illustrated) may be formed on the upper interlayer insulating layer **110***e*. The mask pattern may be formed using a mask (e.g., reticle) equal to a photo mask used for forming the lower openings **130***a* and/or the first middle openings **130***b*. The anisotropic etching may selectively be performed on the upper interlayer insulating layer **110***e* and the upper conductive layer **126** using the mask pattern as an etching mask. For this reason, an upper surface of the sacrificial pattern **110***d* may be exposed.

[0103] The sacrificial pattern **110***d* may selectively be removed. The sacrificial pattern **110***d* may be formed of materials having the etch selectivity different from that of the conductive layers **122** and **126**, the conductive patterns **125**, and the interlayer insulating layers **110**. Accordingly, through the isotropic etching, the conductive layers **122** and **126**, the conductive patterns **125**, and the interlayer insulating layers **110** are not etched or are etched to a minimum, while the sacrificial pattern **110***d* may selectively be etched. The sacrificial pattern **110***d* is removed, and then the second middle openings **130***c* may be again formed.

[0104] The middle buried insulating layer **110***b* may be exposed to the bottom face of the second middle openings **130***c*. The anisotropic etching may selectively be performed on the exposed middle buried insulating layer **110***b* using the interlayer insulating layers **110** as an etching mask. Consequently, the first openings **135** may be formed to penetrate the upper conductive layer **126**, the middle conductive patterns **125**, and the lower conductive layer **122** and expose the upper surface of the substrate **100**.

[0105] The substrate **100** may be exposed to the bottom face of the first openings **135**. Further, the interlayer insulating layers **110**, the conductive layers **122** and **126**, and the conductive patterns **125** may be exposed to the inner wall of the first openings **135**. At this time, the first openings **135** may be a circular type. In addition, the first openings **135** may be a planar matrix shape. The first openings **135** may have different diameter for each region. For instance, the diameter of the first openings **135** penetrating the interlayer insulating layers **110**, the upper conductive layer **126**, and the lower conductive layer **122** may be smaller than that of the first openings **135** penetrating the middle conductive patterns **125**. That is, the first openings **135** may include the expansions **133** having a partially expansive diameter.

[0106] The interlayer insulating layers **110**, the conductive layers **122** and **126**, and the conductive patterns **125** may be stacked in the form of a plate on the memory cell of the substrate **100**. At this time, with respect to the interlayer insulating layers **110**, the conductive layers **122** and **126**, and the conductive patterns **125**, the area may gradually reduce in the order in which the interlayer insulating layers **110**, the conductive layers **122** and **126**, and the conductive patterns **125** are stacked from the substrate **100**. For instance, edges of the interlayer insulating layers **110**, the conductive layers **122** and **126**, and the conductive patterns **125** may have a staircase shape.

[0107] The interlayer insulating layers **110** may be formed of a silicon oxide and/or a silicon nitride. At least the sacrificial pattern **110***d* may be formed of materials that are selectively etched during the etching compared to the upper interlayer insulating layer **110***e* and the middle buried insulating layer **110***b*.

[0108] The conductive layers **122** and **126** and the conductive patterns **125** may include a polysilicon layer or metal layer. Moreover, the conductive layers **122** and **126** and the conductive patterns **125** may be formed of the same material or different material. At this time, at least the middle conductive patterns **125** may be formed of the same material.

[0109] Referring to FIG. **26**, a first insulating layer **141** may conformally be formed on the resulting structure of FIG. **21**. That is, the first insulating layer **141** may be formed along the inner walls and the bottom face of the first openings **135**. At this time, the first insulating layer **141** may be formed on the surfaces of the interlayer insulating layers **110** and the middle conductive patterns **125** exposed to the inner face of the expansions **133**. The first insulating layer **141** may be a single layer or multiple layers. The first insulating layer **141** may be formed of high dielectric constant materials.

[0110] The first insulating layer **141** may be formed by the deposition. For instance, the first insulating layer **141** may be formed by an atomic layer deposition (including modified process of atomic layer deposition) and/or a chemical vapor deposition (including modified processes such as Low Pressure Chemical Vapor Deposition and Plasma Enhanced Chemical Vapor Deposition). The first insulating layer **141** may further include an oxide layer that is selectively formed on the surface of the middle conductive patterns **125** exposed to the inner wall of the first openings **135**.

[0111] Referring to FIGS. **27** and **28**, a buried conductive layer **151** may be formed to fill the inside of the first openings **135**. The buried conductive layer **151** may fill the expansions **133**. The buried conductive layer **151** may be formed of a conductive polysilicon.

[0112] Second openings **136** may be formed by performing the anisotropic etching with respect to the buried conductive layer **151**. The anisotropic etching may be performed using the upper interlayer insulating layers **110***e* as an etching mask. The anisotropic etching may be performed to expose the upper surface of the substrate **100**. Consequently, since a part of the buried conductive layer **151** remains in the expansions **133**, buried conductive patterns **152** may be formed to serve as a floating gate. In addition, since the first insulating layer **141** formed on the inner walls of the first openings **135**, except for the expansions **133**, is selectively removed by the anisotropic etching, a first insulating pattern **142** serving as an interlayer insulating layer may be formed in the expansions **133**. Accordingly, the interlayer insulating layers **110**, the buried conductive patterns **152** serving as a floating gate, the upper conductive layer **126**, and the lower conductive layer **122** may be exposed to the inner walls of the second openings **136**. At this time, the first insulating pattern **142** may surround other surfaces of the buried conductive patterns **152** except for the side exposed to the inner walls of the second openings **136**.

[0113] Alternatively, the first insulating patterns **142**, which surround different floating gates, may be connected to each other along the inner walls of the second openings **136**.

[0114] Referring back to FIG. **6**, the gate insulating layer **143** may selectively be formed on the upper conductive layer **126**, the buried conductive patterns **152**, and the lower conductive layer **122** exposed to the inner walls of the second openings **136** by performing the oxidation process and the anisotropic etching with respect to the resulting structure of FIG. **28**. Alternatively, the gate insulating layer **143** may extend along the inner walls of the second openings **136** by the deposition and anisotropic etching.

[0115] The second openings **136** may be filled with semiconductor materials, and then the semiconductor pillars PLs may be formed in the second openings **136**. The semiconductor materials may include polycrystalline or single crystalline semiconductor.

[0116] The bit lines BLs may be formed on the semiconductor pillars PLs.

[0117] FIG. **29** illustrates methods of fabricating a three-dimensional nonvolatile memory device according to fourth embodiments of the inventive concept. With respect to the methods of fabricating the three-dimensional nonvolatile

memory device according to the first to third embodiments of the inventive concept, same or similar components will be omitted or briefly described.

[0118] Referring to FIG. **29**, the anisotropic etching may be performed to isolate the conductive patterns **121** stacked between the semiconductor pillars PLs of the resulting structure of FIG. **16**. By the anisotropic etching, line openings **137** may be formed to penetrate the stacked interlayer insulating layers **110** and conductive patterns **121**, and isolated conductive patterns **121***a* may be formed. Moreover, interlayer insulating patterns **115** may be formed by patterning the interlayer insulating layers **110**.

[0119] Subsequently, silicide layers **121***b* may be formed on the surfaces of the isolated conductive patterns **121***a* exposed to the inner walls of the line openings **137** by a silicidation process. At this time, the upper surface of the semiconductor pillars PLs can be protected by an insulating layer (not illustrated). The silicidation process may include metal layer deposition, heat treatment, and unreacted metal removal.

[0120] Subsequently, the line openings **137** may be buried with insulating materials, and the bit lines BLs may be formed on the semiconductor pillars PLs to electrically connect with the semiconductor pillars PLs.

[0121] The processes may be applicable to the method of fabricating the memory devices according to the above-described embodiments of the inventive concept.

[0122] FIG. **30** illustrates an electronic device **200** including one or more nonvolatile memory devices according to various embodiments of the inventive concept. The electronic device **200** may be used in a wireless communication device such as PDA, a laptop computer, a mobile computer, a web tablet, a wireless phone, a cell phone, a digital music player and/or in all devices that can transmit and receive data in a wired and/or wireless environment.

[0123] The electronic device **200** may include a controller **210**, an input/output device **220** such as, a keypad, a keyboard, or a display, a memory **230**, and a wireless interface **240**, which are combined to each other through a bus **250**. The controller **210** may include at least one microprocessor, digital signal processor, microcontroller or the like. The memory **230** may be used to store instructions to be executed by the controller **210**. Moreover, the memory **230** may be used to store a user data. The memory **230** includes a nonvolatile memory device according to various embodiments of the inventive concept.

[0124] The electronic device **200** may use a wireless interface **240** to transmit data to a wireless communication network communicating using a RF signal or to receive data from network. The wireless interface **240** may include an antenna, a wireless transceiver and so on.

[0125] The electronic system **200** may be used in a communication interface protocol of a third generation communication system such as CDMA, GSM, NADC, E-TDMA, WCDMA, and CDMA2000.

[0126] FIG. **31** illustrates a memory system including a nonvolatile memory device according to various embodiments of the inventive concept.

[0127] The memory system **300** may include a memory device **310** for storing mass data and a memory controller **320**. The memory controller **320** controls the memory device **310** so as to read data stored in the memory device **310** and/or to write data into the memory device **310** in response to read/write requests of a host **330**. The memory controller **320** may constitute an address mapping table for mapping an address provided from the host **330** (a mobile device or a computer system) into a physical address of the memory device **310**. The memory **310** includes one or more nonvolatile memory devices according to various embodiments of the inventive concept.

[0128] Embodiments of the inventive concept may include a three-dimensional nonvolatile memory device with the floating gates. According to various embodiments of the inventive concept, since the floating gates are stacked to be isolated from each other, it can prevent charges stored in the floating gates from being diffused into another cell after the floating gates are programmed.

[0129] Accordingly, the reliability of semiconductor devices can be improved, and the malfunction of memory devices can be reduced or prevented.

[0130] In addition, since the floating gates are formed using the etch selectivity between different layers, it can be formed by a simple operation.

[0131] Many different embodiments have been disclosed herein, in connection with the above description and the drawings. It will be understood that it would be unduly repetitious and obfuscating to literally describe and illustrate every combination and subcombination of these embodiments. Accordingly, the present specification, including the drawings, shall be construed to constitute a complete written description of all combinations and subcombinations of the embodiments described herein, and of the manner and process of making and using them, and shall support claims to any such combination or subcombination.

[0132] The above-disclosed subject matter is to be considered illustrative and not restrictive, and the appended claims are intended to cover all such modifications, enhancements, and other embodiments, which fall within the true spirit and scope of the inventive concept. Thus, to the maximum extent allowed by law, the scope of the inventive concept is to be determined by the broadest permissible interpretation of the following claims and their equivalents, and shall not be restricted or limited by the foregoing detailed description.

1. A method of fabricating a three-dimensional nonvolatile memory device, the method comprising:

forming openings penetrating interlayer insulating layers and conductive layers stacked alternately on a substrate;

forming expansions having a diameter wider than that of the openings penetrating the interlayer insulating layers by selectively recessing sidewalls of the conductive layers exposed by the openings;

forming first insulating layers on surfaces of the conductive layers exposed by the expansions;

forming floating gates disposed in the expansions interposing the first insulating layers;

forming second insulating layers on surfaces of the floating gates adjacent to the openings; and

forming semiconductor pillars filling the openings.

2. The method of claim **1**, wherein the forming of the expansions includes: isotropically etching the conductive layers so as to selectively etch the conductive layers more than the substrate and the interlayer insulating layers, and

the forming of the floating gates includes: forming buried conductive layers filling the openings and the expansions; and anisotropically etching the buried conductive layers to expose an upper surface of the substrate.

3. The method of claim **1**, wherein the forming of the first insulating layers and the second insulating layers includes: performing an oxidation process or deposition process.

4. The method of claim **1**, further comprising: forming sequentially stacked lower interlayer insulating layers and lower conductive layers including lower openings provided with sidewalls to be connected successively to the openings on the substrate, before forming the openings.

5. The method of claim **1**, further comprising: isolating the interlayer insulating layers and the conductive layers from each other between the semiconductor pillars; and

forming silicide layers on surfaces of the isolated conductive layers.

6.-**10**. (canceled)

11. A method of fabricating a three-dimensional nonvolatile memory device comprising:

forming openings penetrating interlayer insulating layers and conductive layers stacked alternately on a substrate; then

recessing sidewalls of the conductive layers that are exposed by the openings relative to sidewalls of the interlayer insulating layers that are exposed by the openings to define expansions between portions of adjacent insulating layers that are exposed by the recessing of the sidewalls of the conductive layers; then

forming floating gates in the expansions; and then

forming semiconductor pillars in the openings to extend on the floating gates and on the sidewalls of the interlayer insulating layers.

12. The method of claim **11** wherein the following is performed between the recessing sidewalls and the forming floating gates:

forming an insulating layer on the sidewalls of the conductive layers.

13. The method of claim **11** wherein the following is performed between the forming floating gates and the forming semiconductor pillars:

forming an insulating layer on the floating gates, adjacent the openings.

14. The method of claim **12** wherein the following is performed between the forming floating gates and the forming semiconductor pillars:

forming an insulating layer on the floating gates, adjacent the openings.

15. The method of claim **11** wherein recessing sidewalls comprises selectively etching the sidewalls of the conductive layers that are exposed by the openings relative to sidewalls of the interlayer insulating layers that are exposed by the openings.

16. The method of claim **11** wherein forming floating gates in the expansions comprises:

forming a conductive layer in the openings and in the expansions; and

removing the conductive layer from the openings while allowing the conductive layer to remain in the expansions.

17. The method of claim **11** wherein forming openings is preceded by:

sequentially stacking lower insulating layers and lower conductive layers upon one another on the substrate; and

forming lower openings penetrating the lower insulating layers and the lower conductive layers; and

wherein forming openings comprises forming openings penetrating interlayer insulating layers and conductive layers stacked alternately on a substrate and aligned to the lower openings.

18. The method of claim **11** further comprising:

forming a silicide layer on sidewalls of the floating gates opposite the semiconductor pillars.

19. The method of claim **18** wherein forming a silicide layer is preceded by forming a conductive layer on the sidewalls of the floating gates opposite the semiconductor pillars.

20. The method of claim **11** wherein the expansions are ring-shaped expansions surrounding the openings.

* * * * *