US007966646B2

(12) **United States Patent**
Chou et al.

(10) **Patent No.: US 7,966,646 B2**
(45) **Date of Patent: Jun. 21, 2011**

(54) **STATELESS CRYPTOGRAPHIC PROTOCOL-BASED HARDWARE ACCELERATION**

(75) Inventors: **Randy Chou**, San Jose, CA (US); **Brijesh Nambiar**, Sunnyvale, CA (US)

(73) Assignee: **Aruba Networks, Inc.**, Sunnyvale, CA (US)

(*) Notice: Subject to any disclaimer, the term of this patent is extended or adjusted under 35 U.S.C. 154(b) by 1356 days.

(21) Appl. No.: **11/496,659**

(22) Filed: **Jul. 31, 2006**

(65) **Prior Publication Data**

US 2011/0113244 A1 May 12, 2011

(51) **Int. Cl.**
G06F 7/04 (2006.01)

(52) **U.S. Cl.** **726/2**

(58) **Field of Classification Search** ..... None
See application file for complete search history.

(56) **References Cited**

U.S. PATENT DOCUMENTS

6,094,485	A	7/2000	Weinstein et al.
6,539,093	B1	3/2003	Asad et al.
6,748,528	B1	6/2004	Greenfield
6,785,719	B1	8/2004	Jacobson et al.
7,100,054	B2	8/2006	Wenisch et al.
7,114,080	B2	9/2006	Rahman et al.
7,334,125	B1	2/2008	Pellacuru
7,412,524	B1	8/2008	Gupta et al.
7,467,099	B2	12/2008	Kamada et al.
7,519,810	B2	4/2009	Blew et al.
7,797,276	B1	9/2010	Yang
7,873,827	B2	1/2011	Miyazawa
2002/0087884	A1	7/2002	Shacham et al.
2002/0144128	A1	10/2002	Rahman et al.
2002/0166048	A1	11/2002	Coulier
2003/0014623	A1 *	1/2003	Freed et al. 713/150
2003/0016819	A1	1/2003	Cheng
2003/0033545	A1	2/2003	Wenisch et al.
2003/0177358	A1	9/2003	Martin et al.
2003/0221126	A1	11/2003	Berman et al.
2004/0015406	A1	1/2004	Kamada et al.
2004/0093419	A1	5/2004	Weihl et al.
2004/0181668	A1	9/2004	Blew et al.
2004/0218762	A1	11/2004	Le Saint et al.
2004/0268152	A1	12/2004	Xia et al.
2006/0047950	A1	3/2006	Thayer
2006/0047965	A1	3/2006	Thayer
2006/0230446	A1	10/2006	Vu
2007/0005981	A1	1/2007	Miyazawa
2007/0074282	A1	3/2007	Black et al.
2007/0198823	A1	8/2007	Blew et al.
2007/0291936	A1	12/2007	Milana et al.
2008/0089521	A1	4/2008	Le Saint et al.
2008/0130900	A1	6/2008	Hsieh
2008/0137855	A1	6/2008	Enomoto et al.
2008/0209209	A1	8/2008	Gupta et al.

* cited by examiner

Primary Examiner — Brandon S Hoffman
(74) *Attorney, Agent, or Firm* — Blakely, Sokoloff, Taylor & Zafman LLP

(57) **ABSTRACT**

According to one embodiment of the invention, a network device comprises a first processing element and a second processing element. The first processing element is adapted to handle an authentication handshaking protocol, such as the SSL/TLS Handshake, and upon receipt of a Client Key Exchange message, passes control of the authentication handshaking protocol to the second processing element. The second processing element completes the authentication handshaking protocol.

20 Claims, 4 Drawing Sheets

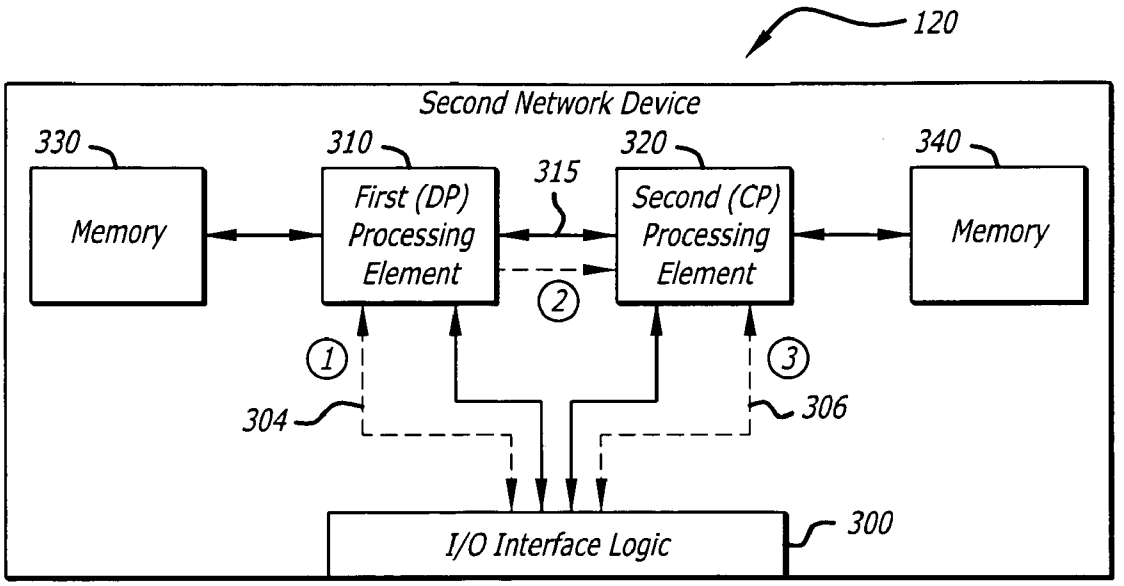

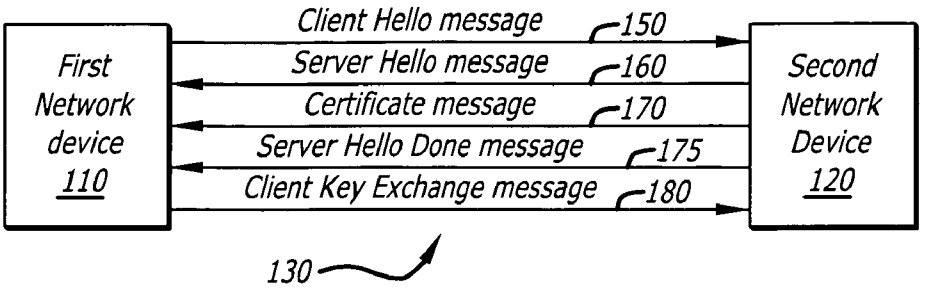

FIG. 1

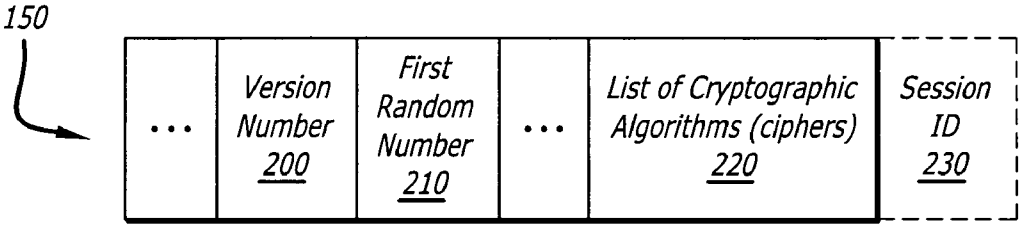

FIG. 2A

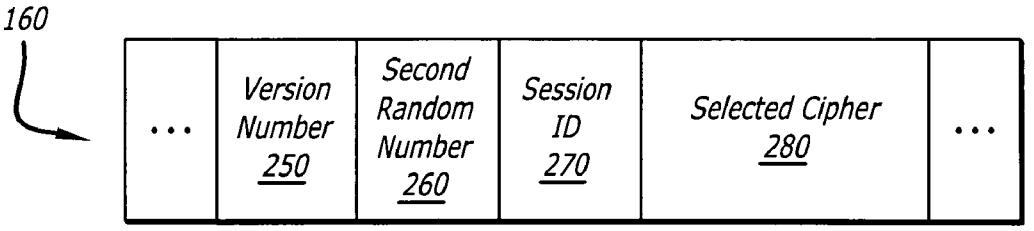

FIG. 2B

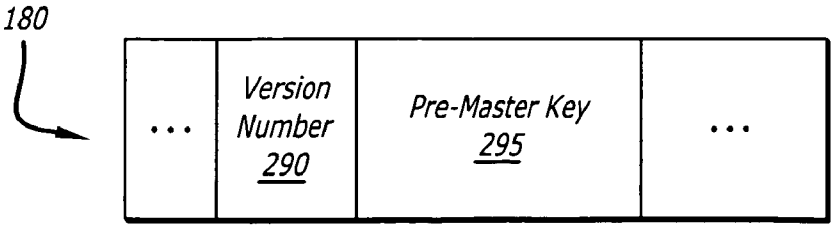

FIG. 2C

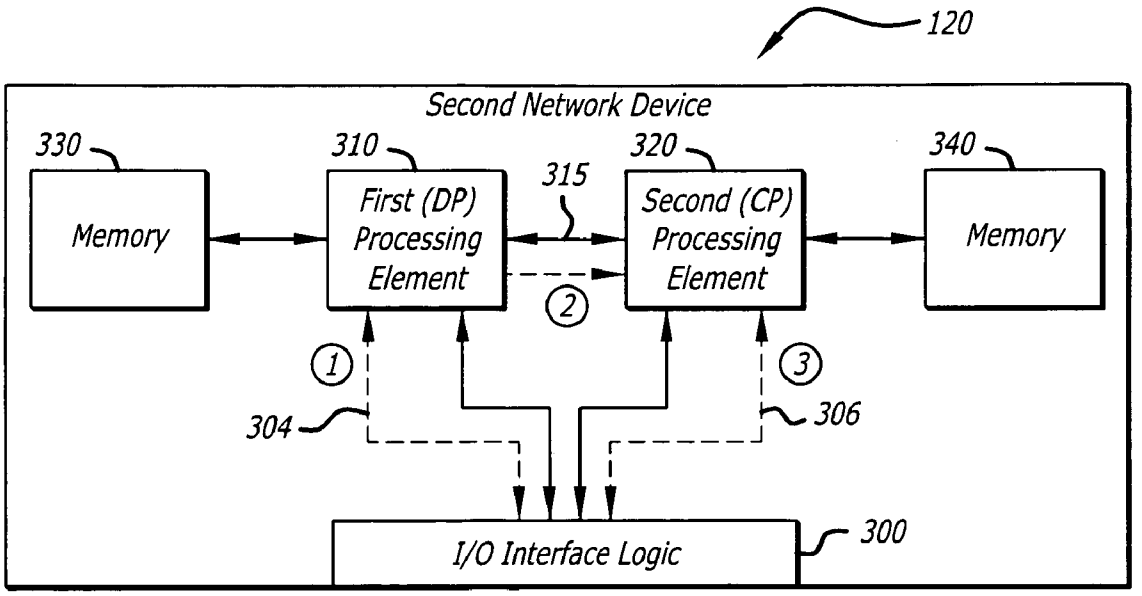
120
Second Network Device
330
Memory
310
First (DP) Processing Element
315
320
Second (CP) Processing Element
340
Memory
2
1
3
304
306
I/O Interface Logic
300

FIG. 3

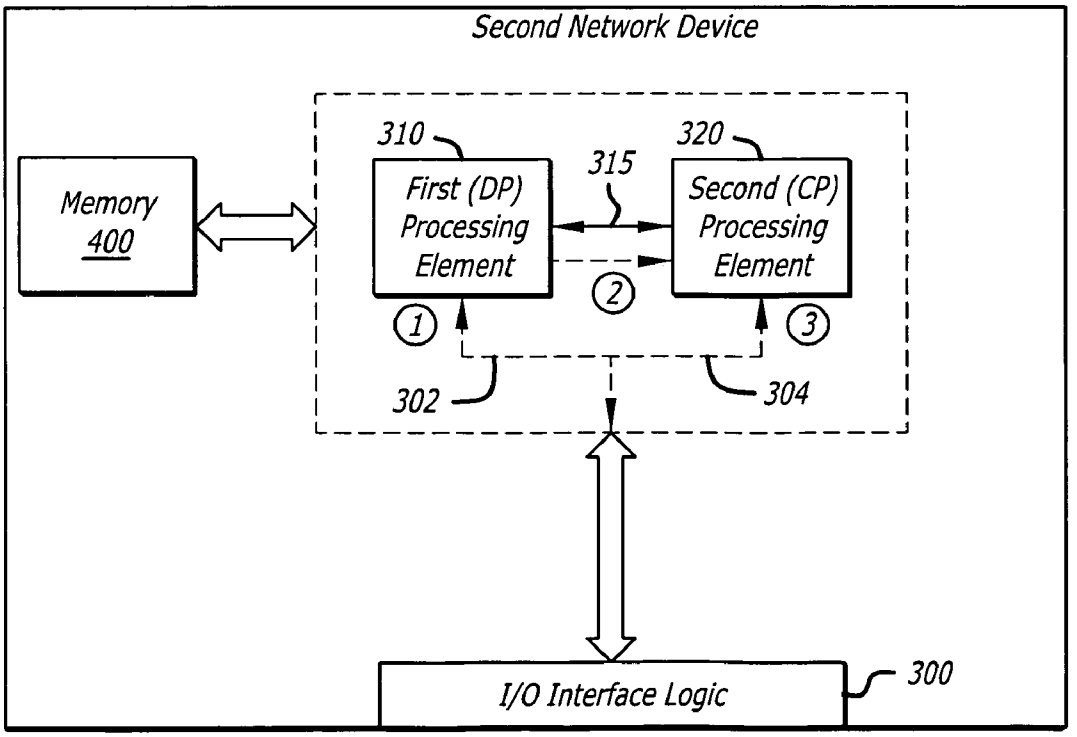
Second Network Device
Memory 400
310
First (DP) Processing Element
315
320
Second (CP) Processing Element
2
1
3
302
304
I/O Interface Logic
300

FIG. 4

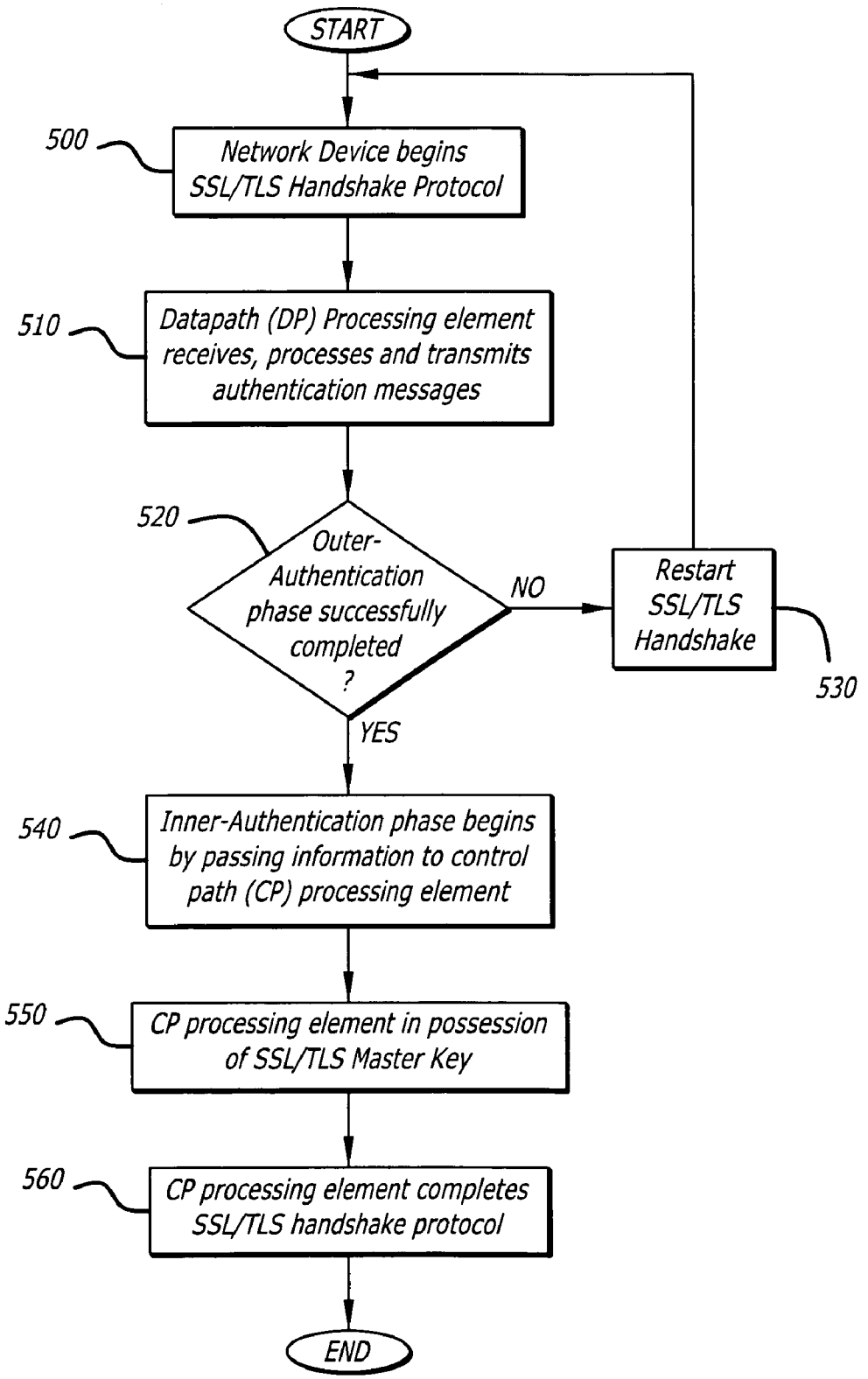
START
500
Network Device begins SSL/TLS Handshake Protocol
510
Datapath (DP) Processing element receives, processes and transmits authentication messages
520
Outer-Authentication phase successfully completed ?
NO
Restart SSL/TLS Handshake
530
YES
540
Inner-Authentication phase begins by passing information to control path (CP) processing element
550
CP processing element in possession of SSL/TLS Master Key
560
CP processing element completes SSL/TLS handshake protocol
END

FIG. 5

FIG. 6

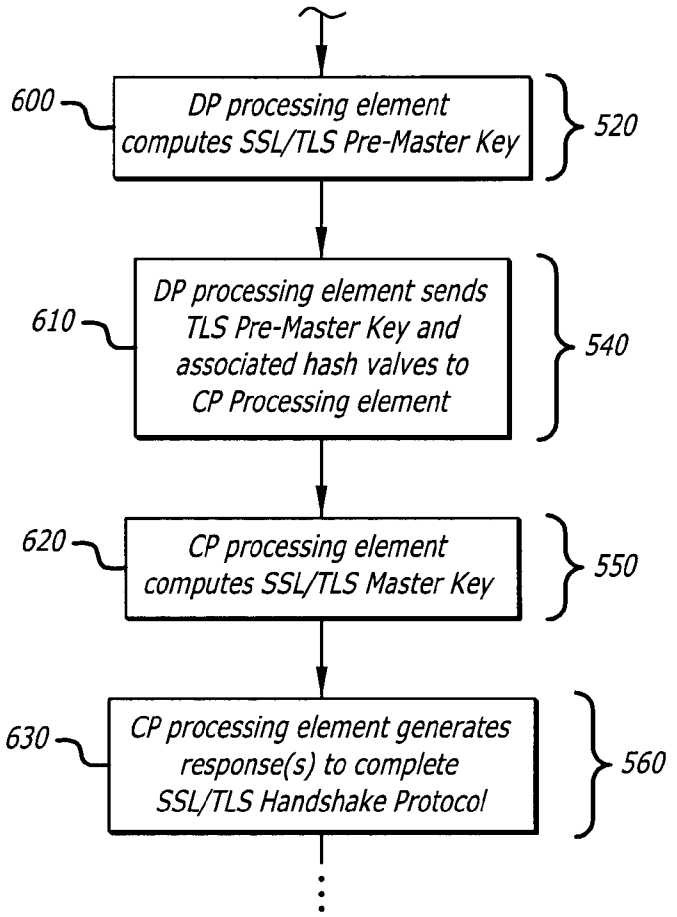
600
DP processing element computes SSL/TLS Pre-Master Key
520
610
DP processing element sends TLS Pre-Master Key and associated hash valves to CP Processing element
540
620
CP processing element computes SSL/TLS Master Key
550
630
CP processing element generates response(s) to complete SSL/TLS Handshake Protocol
560

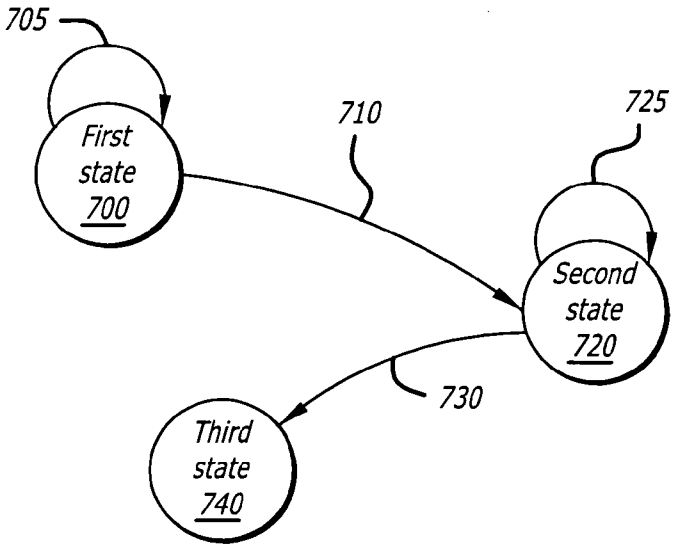
705
First state 700
710
725
Second state 720
730
Third state 740

FIG. 7

STATELESS CRYPTOGRAPHIC PROTOCOL-BASED HARDWARE ACCELERATION

FIELD

Embodiments of the invention relate to the field of communication security, and in particular, to a system, apparatus and method for providing hardware acceleration for use by cryptographic protocols in a multi-processor or multi-core processor environment.

GENERAL BACKGROUND

Over the last decade or so, many companies have installed communication networks in order to allow their employees access to various network resources. To improve efficiency and to support mobility, many wireless access enhancements have been added to local, personal, and wide area networks. Based on these enhancements, Wireless Local Area Networks (WLANs), Personal Area Networks (PANs) and Wide Area Networks (WLANs) have been and continue to be utilized by more and more users.

Typically, a WLAN supports communications between a number of wireless devices without any required line of sight for such communications. In current network configurations, multiple Access Points (APs) are coupled to a wired network, such as an Ethernet network for example, and each AP operates as a relay station by supporting communications between resources of the wired network and wireless stations (STAs). STAs are mobile, wireless devices that enable users to alter their physical locations, but still communicate over the network.

A networking switch is deployed as a central device within the WLAN. The networking switch is adapted to receive signals from devices communicatively coupled to the wired network or radio waves from wireless devices. For both types of communications, the networking switch directs traffic across the WLAN, enabling devices to communicate with each other.

Secure Socket Layer (SSL) and Transport Layer Security (TLS), the successor to SSL, are cryptographic protocols that may be used by networking switches to secure data communications over a wireless network. While there are slight differences between these cryptographic protocols, the overall functionality of these protocols is generally the same.

SSL and/or TLS (hereinafter referred to as "SSL/TLS") provides endpoint authentication and privacy over a network using cryptography. In typical use, a server is authenticated (e.g., the server identity is verified) while the client remains non-authenticated. However, SSL/TLS supports mutual authentication in accordance with a SSL or TLS Handshake Protocol that allows the server and client to authenticate each other and to negotiate a cryptographic algorithm and keys before information is exchanged. This enables the server and client to obfuscate their communications and prevent tampering by interlopers.

SSL/TLS operates on layers beneath application protocols (e.g., Hypertext Transfer Protocol "HTTP", Simple Mail Transfer Protocol "SMTP", etc.) but above the transport protocols such as Transport Control Protocol (TCP) and User Datagram Protocol (UDP). While SSL/TLS can add security to any protocol that uses reliable connections (such as TCP), it is most commonly used with HTTP to form a secure communication path "HTTPS" that many of us use to access secure web pages.

Currently, networking switches are implemented with two processors, where one processor handles the control path (CP processor) and the other processor handles the data path (DP processor). While the processing performance of the DP processor is far superior to the CP processor, and thus regularly handles encryption/decryption, it is normally difficult to program since these processors usually are implemented with a small, proprietary operating system (OS). The CP processor normally runs on a well-known OS and sacrifices speed for flexibility and configurability.

As a result, with networking switches, the CP processor handles the data processing except for offloading computationally intensive parts of the SSL/TLS operations such as performance of certain cryptographic functions such as RSA. This offloading solution has posed a number of disadvantages. For instance, state information needs to be maintained in the control path. This creates an unnecessary amount of data before an RSA handshake is even completed. Second, CP processors are highly susceptible to denial of service (DOS) attacks.

Alternatively, it has been suggested for the DP processor to handle the entire SSL/TLS operations within the data path. However, this solution causes increased design complexity when implementing features because it is typically much more difficult to implement features on the DP processor as mentioned above.

Hence, it would be advantageous to develop a communication scheme that enables any wireless device to communicate with another wireless device, and to make use of the acknowledgement signaling requirements described above.

BRIEF DESCRIPTION OF THE DRAWINGS

The invention may best be understood by referring to the following description and accompanying drawings that are used to illustrate embodiments of the invention.

FIG. **1** is an exemplary embodiment of a SSL/TLS communication scheme in accordance with an embodiment of the invention performed by wireless devices of a wireless network.

FIG. **2**A is an exemplary embodiment of a Client Hello message sent from a first wireless device in accordance with the SSL/TLS scheme of FIG. **1**.

FIG. **2**B is an exemplary embodiment of a Server Hello message sent from a second wireless device in accordance with the SSL/TLS scheme of FIG. **1**.

FIG. **2**C is an exemplary embodiment of a Client Key Exchange message sent from the first wireless device in accordance with the SSL/TLS scheme of FIG. **1**.

FIG. **3** is a first exemplary embodiment of a second wireless device operating in accordance with an embodiment of the invention.

FIG. **4** is a second exemplary embodiment of a second wireless device operating in accordance with an embodiment of the invention.

FIG. **5** is an exemplary flowchart of an embodiment of outer and inner authentication schemes of the SSL/TLS Handshake.

FIG. **6** is an exemplary flowchart of an embodiment of the handoff between the processing elements after completion of the outer-authentication scheme of the SSL/TLS Handshake of FIG. **5**.

FIG. **7** is an exemplary state diagram of the operational duties of the processing elements within a networking switch to perform the SSL/TLS cryptographic protocols.

DETAILED DESCRIPTION

Embodiments of the invention relate to the field of security, and in particular, to a network, networking switch and method

for providing hardware acceleration for use by cryptographic protocols in a multi-processor or multi-core processor environment. This is accomplished by segmenting operations performed when conducting an authentication protocol, such as an SSL/TLS Handshake protocol (described below) or any other of the protocols that use SSL/TLS as a basis such as IEEE 802.1x. For instance, the authentication protocol may be implemented as an SSL Handshake Protocol and/or TLS Handshake Protocol (hereinafter referred to as the "SSL/TLS Handshake"), where one processing element performing the SSL/TLS Handshake from the start of a session until receipt of a Client Key Exchange message. Thereafter, another processing element completes the SSL/TLS Handshake.

More specifically, according to one embodiment of the invention, a first processing element of a network device handles the SSL/TLS Handshake until after receipt of the Client Key Exchange message. Once the first processing element receives the Client Key Exchange message, information to complete authentication operations for the SSL/TLS Handshake is transmitted to a second processing element.

More specifically, according to one embodiment of the invention, the first processing element sends a Pre-Master key to a second processing element as well as one or more hash values for messages that have transpired during the SSL/TLS Handshake. The hash value(s) is(are) required for the second processing element to continue the remaining part of the TLS handshake for example. The completion of a TLS handshake includes a hash of all the frames sent and received by each peer. The Pre-Master key and random numbers previously exchanged between the network devices are then used to produce a Master Key that is used to continue symmetric cryptographic operations.

Alternatively, in lieu of sending the Pre-Master key, it is contemplated that the Master Key may be generated by the first processing element and passed to the second processing element in a secure or non-secured manner.

Herein, the first processing element may be a data path (DP) processor and the second processing element may be a control path (CP) processor that is responsible for controlling the control plane, and thus, differs from the DP processor. Alternatively, the first and second processing elements may be separate processor cores of a multi-core processor.

Certain details are set forth below in order to provide a thorough understanding of various embodiments of the invention, albeit the invention may be practiced through many embodiments other that those illustrated. Well-known logic and operations are not set forth in detail in order to avoid unnecessarily obscuring this description.

Herein, a "network device" may be broadly construed as any device that supports secured communications with another device. Some of these network devices are wireless devices since they posses wireless functionality that support secured communications over a wireless link. Specific examples of a network device (some of which operating as wireless devices) include, but are not limited or restricted to a networking switch, server, portable or desktop computer, VoIP phone, personal digital assistant "PDA", and the like. Each network device comprises a plurality of processing elements. Examples of a "processing element" include, but are not limited or restricted to a processor, a processor core, or the like.

A "wireless link" may be broadly construed as a pathway that supports wireless communications between two wireless devices. The wireless communications are in accordance with a wireless communication standard such as High Performance Radio LAN (HiperLan) or IEEE 802.11. Examples of different types of IEEE 802.11 standards include, but are not limited or restricted to (i) an IEEE 802.11b standard entitled "Wireless LAN Medium Access Control (MAC) and Physical Layer (PHY) specifications: Higher-Speed Physical Layer Extension in the 2.4 GHz Band" (IEEE 802.11b, 1999), (ii) an IEEE 802.11a standard entitled "Wireless LAN Medium Access Control (MAC) and Physical Layer (PHY) specifications: High-Speed Physical Layer in the 5 GHz Band" (IEEE 802.11a, 1999), (iii) a revised IEEE 802.11 standard "Wireless LAN Medium Access Control (MAC) and Physical Layer (PHY) specifications" (IEEE 802.11, 2003), or the like.

The "Handshake Protocol" is a series of messages that negotiate the security parameters of a data transfer session. Normally, the Handshake Protocol between two network devices is generally performed by hardware under software control. The software is in the form of an application, an applet, a routine or even one or more executable instructions stored in a device storage medium. The "device storage medium" may include, but is not limited or restricted to a programmable electronic circuit, a semiconductor memory device, a volatile memory (e.g., random access memory, etc.), a non-volatile memory (e.g., read-only memory, flash memory, a hard drive, etc.), a portable memory device (e.g., floppy diskette, a compact disk "CD", digital versatile disc "DVD", a digital tape, a Universal Serial Bus, "USB" flash drive), or the like.

A "message" is information arranged in a selected format that is transmitted over a link. Examples of different messages include, but are not limited or restricted to data frames, "Hello" messages, Key Exchange messages, digital certificates and the like.

Referring to FIG. **1**, an exemplary embodiment of a network **100** is shown. In accordance with one embodiment of the invention, network **100** comprises a first network device **110** and a second network device **120** in communication with each other. For instance, according to one embodiment of the invention, second network device **120** may be a networking switch that is directly connected to first network device **110** through a wireless link **130** so that security parameters can be negotiated by these devices during a SSL/TLS Handshake. According to another embodiment of the invention, second network device **120** is connected to first network device **110** through a wired link.

As generally shown, the SSL/TLS Handshake involves two primary phases. A first phase is referred to as the "Outer Authentication" phase in which the primary exchange of data during the SSL/TLS Handshake is performed in order to have sufficient information to compute the Master Key. The next phase is referred to the "Inner Authentication" phase where control of the SSL/TLS Handshake is passed from a first processing element to a second processing element. Hence, the second processing element now is responsible for completing the SSL/TLS Handshake with previously being required to store state and other information exchanged during the Outer Authentication phase. According to one embodiment of the invention, the Inner Authentication phase occurs after the Client Key Exchange message has been received from first network device **110**.

With respect to the first phase, the SSL/TLS Handshake session begins with a transmission of a Client Hello message **150**. Client Hello message **150** is a message that provides second network device **120** with information that is used to establish secured communications between network devices **110** and **120**.

For instance, as one embodiment of the invention and as shown in FIG. **2**A, Client Hello message **150** comprises (i) a version number **200**, (ii) a first random number **210**, and (iii) a list **220** of cryptographic algorithms supported by first net-

work device **110**. Version number **200** is configured to identify the highest version of the SSL/TLS Handshake algorithm that is supported by first network device **110**. First random number **210** is a pseudo-random number that may include date and time information. List of cryptographic algorithms **220** includes a list of ciphers supported by first network device **110** such as an RSA cipher, Ephemeral Diffie-Hellman (DHE) cipher, Data Signature Standard (DSS) cipher, or the like. Optionally, Client Hello message **150** may comprise a session identification (ID) **230** that is used to identify active or sessions that can be resumed.

In response to receiving and processing Client Hello message **150**, a first processing element (not shown) of second wireless device **120** returns a Server Hello message **160** as shown in detail in FIG. **2**B. Similar to Client Hello message **150**, Server Hello message **160** comprises (i) a version number **250** that identifies the highest version of SSL/TLS supported by both devices. Additionally, Server Hello message **160** comprises (ii) a second random number **260**, (iii) a session ID **270**, and (iv) a selection of the cipher used by these devices **110** and **120** in their secured communications **280**.

Additionally, second network device **120** sends a certificate message **170** to first network device **110**. Certificate message **170** includes at least a digital certificate in a format that abides with cryptographic algorithms identified in Client Hello message **150** and includes a public key of second network device **120**. It is contemplated that certificate message **170** may further include one or more additional certificates for validating the digital certificate, such as a digital certificate from a trusted third party (e.g., certification authority such as Verisign®, financial institution, trusted vendor, governmental entity, etc.). The digital certificate enables the secure transfer of the public key of second network device **120** to first network device **110**.

Thereafter, second network device **120** sends a Server Hello Done message **175** to denote that it has finished and is awaiting a response from first network device **110**. Server Hello Done message **175** does not include data, but rather, merely signals that transmissions in response to Client Hello message **150** have finished.

After receipt of Server Hello message **160**, a client key exchange follows in accordance with the previously agreed upon cipher algorithm. For instance, in accordance with the RSA algorithm, first network device **110** generates a Client Key Exchange message **180** as shown in FIG. **2**C. Client Key Exchange message **180** comprises (i) version number **290** previously included in Client Hello message **150** in order to prevent rollback attacks, and (ii) a Pre-Master key **295**.

According to one embodiment of the invention, Pre-Master key **295** includes a 48-byte value that is generated by first network device **110**. Pre-Master key **295** may be a random, pseudorandom or predetermined value. Prior to transmission, Client Key Exchange message **180** is encrypted, or alternatively Pre-Master key **295** is encrypted with the public key of second network device **120** that was recovered from digital certificate **170**.

Upon receipt of Client Key Exchange message **180**, second network device **120** can recover Pre-Master key **295** using its private key securely stored within second network device **120**. Based on specific arithmetic and/or logical operations performed on the Pre-Master key **295**, first random number **210** and second random number **260**, a Master key can be produced prior to completion of the SSL/TLS authentication procedure. The Master key is now used as a symmetric key for supporting encrypted communications between the network devices **110** and **120**.

Thereafter, the first processing element transfers control of the SSL/TLS Handshake to the second processing element as described further in FIGS. **3** and **4**. Thereafter, second processing element performs the Inner Authentication phase and completes the SSL/TLS Handshake as described below.

Referring now to FIG. **3**, a first exemplary embodiment of second network device **120** operating in accordance with an embodiment of the invention is shown. Second network device **120** comprises an input/output (I/O) interface **300**, a data path (DP) processing element **310** and a control path processing element (**320**). As shown, each of these processing elements **310** and **320** is coupled to a dedicated memory **330** and **340**, respectively. Alternatively, processing elements **310** and **320** may be processor cores implemented within the same processing unit (e.g., microprocessor, digital signal processor, etc.) or even coupled to shared memory **400** as shown in FIG. **4**.

For both device architectures shown in FIGS. **3** and **4**, DP processing element **310** is adapted to handle the above-identified Outer Authentication phase as represented by communication pathway **304** that includes receipt and processing of Client Hello message **150** (see FIG. **1**) up to receipt and processing of Client Key Exchange message **180** (see FIG. **1**). At this time, CP processing element **310** is not storing state information concerning the SSL/TLS Handshake. After successfully completing the Outer Authentication phase, normally after verification of receipt of Client Finish and Server Finish messages (not shown), information to continue the SSL/TLS Handshake is sent from DP processing element **310** to CP processing element **320** over communication pathway **305**, which is now responsible for completing the SSL/TLS Handshake. Thereafter, CP processing element **320** controls the SSL/TLS Handshake as illustrated by communication pathway **306**. At this time, DP processing element **310** does not receive the authentication message over communication pathway **304**.

Referring to FIG. **5**, an exemplary flowchart of an embodiment of the Outer and Inner authentication phases of the SSL/TLS Handshake is shown. Initially, a network device begins the SSL/TLS Handshake (block **500**). At this time, a data path (DP) processing element is adapted to (i) receive and process incoming authentication messages for the network device and (ii) send outgoing authentication messages (block **510**). Examples of incoming authentication messages include, but are not limited or restricted to the Client Hello message and the Client Key Exchange message. Similarly, examples of an outgoing authentication message includes, but is not limited or restricted to Server Hello and Server Hello Done messages.

Upon experiencing an error during transmission or processing of an authentication message, the SSL/TLS Handshake may be restarted (blocks **520** and **530**). Otherwise, when the Outer Authentication phase has completed and the DP processing element is in receipt of information necessary to produce the Master key, such information is passed to a control path (CP) processing element located within the network device (blocks **520** and **540**).

At this time, the Inner Authentication phase begins where the CP processing element comes into possession of the Master Key and is now responsible for completing the SSL/TLS Handshake without further involvement by the DP processing element (blocks **550** and **560**).

Referring now to FIG. **6**, an exemplary flowchart of an embodiment of the handoff between the DP and CP processing elements after completion of the Outer Authentication phase of the SSL/TLS Handshake of FIG. **5** is shown. First, based on data (second random number) generated by the

second network device as well as data provided by the first network device, namely the Pre-Master key within the Client Key Exchange message and the first random number within the Client Hello message, the second network device is capable of computing the SSL/TLS Pre-Master Key (see block **600**). This computation can be used to determine that the Outer Authentication phase was successfully completed.

Thereafter, the DP processing element sends the Pre-Master key and perhaps one or more hash values for messages that have transpired during the SSL/TLS Handshake to the CP processing element (block **610**). According to one embodiment of the invention, each hash value is a result produced by performing one-way hash operations on authentication messages during the SSL/TLS Handshake. These hash operations may be in accordance with MD5, SHA-1 or other hash algorithms that are performed in an iterative to produce a single hash value or in any other selected manner. The hash value is used by the CP processing element to continue the remaining portion of the SSL/TLS Handshake.

Upon receipt of the Pre-Master key, the CP processing element computes the Master Key based on the Pre-Master key, the first random number generated by the first network device and the second random number generated by the second network device (block **620**). For instance, the Master Key may be generated by loading the Pre-Master key and the random numbers into a pseudo-random number generator (PRNG), where the result produced is equal to the Master Key.

After the Master Key is produced by the first network device, the CP processing element generates one or more responses to complete the SSL/TLS Handshake (block **630**).

Referring now to FIG. **7**, an exemplary state diagram of the operational duties of the processing elements within a networking switch to perform the SSL/TLS Handshake is shown. During the Outer Authentication phase of the SSL/TLS Handshake, the networking switch is placed in a first state **700** where the DP processing element controls the authentication message exchange **705**. Upon completion of the Outer Authentication phase, as represented by state transition **710**, the networking switch is placed in a second state **720** where authentication data is passed to the CP processing element. During the second state **720**, the CP processing element of the networking switch controls the authentication message exchange in order to complete the SSL/TLS Handshake **725**. Upon completion of the SSL/TLS Handshake, as represented by state transmission **730**, the networking switch is placed in a third (steady) state **740** in which the functionality of the DP processing element and the CP processing element are not mutually exclusive.

While the invention has been described in terms of several embodiments, the invention should not limited to only those embodiments described, but can be practiced with modification and alteration within the spirit and scope of the appended claims. The description is thus to be regarded as illustrative instead of limiting.

What is claimed is:

1. A network device comprising:

a first processing element to handle an authentication handshaking protocol and to pass control of the authentication handshaking protocol upon receipt of a Client Key Exchange message; and

a second processing element to control and complete the authentication handshaking protocol,

wherein the first processing element and the second processing element are physically located within the network device.

2. The network device of claim **1**, wherein the authentication handshaking protocol is any protocol that uses either a Secure Socket Layer (SSL) Handshaking Protocol or Transport Layer Security (TLS) Handshaking protocol as a basis for authentication.

3. The network device of claim **1**, wherein the authentication handshaking protocol is a Transport Layer Security (TLS) Handshaking Protocol.

4. The network device of claim **1**, wherein the first processing element is a data path (DP) processor and a second processing element is a control path (CP) processor.

5. The network device of claim **1**, wherein the first processing element is a first processor core and the second processing element is a second processor core, the first processor core and the second processor core implemented within a multicore processor.

6. The network device of claim **1**, wherein the first processing element passes (i) a first value that is generated by a remotely located network device and encrypted with a public key associated with the network device and (ii) at least one hash value associated with messages received and transmitted by the network device during the authentication handshaking protocol.

7. The network device of claim **6**, wherein the first processing element further passes a first random number generated by the remotely located network device and a second random number generated internally within the network device to the second processing element.

8. The network device of claim **7**, wherein the second processing element to generate a Master key based on the first value, the first random number and the second random number, the Master key to be used as a key for secure communications with the remotely located network device in accordance with a symmetric key communication scheme.

9. The network device of claim **6**, wherein the first processing element further passes information for the second processing element to fetch a first random number generated by the remotely located network device and a second random number generated internally within the network device in order to produce a Master key based on the first value, the first random number and the second random number, the Master key to be used as a key for secure communications with the remotely located network device in accordance with a symmetric key communication scheme.

10. A method comprising:

commencing an authentication handshaking protocol controlled solely by a first processing element;

passing control of the authentication handshaking protocol by the first processing element upon receipt of a Client Key Exchange message; and

completing the authentication handshaking protocol by a second processing element, the second processing element being physically located with the first processing element in a network device.

11. The method of claim **10**, wherein the authentication handshaking protocol is a Secure Socket Layer (SSL) Handshaking Protocol.

12. The method of claim **11**, wherein the passing of control of the authentication handshaking protocol upon receipt of the Client Key Exchange message comprises the first processing element passing (i) a first value that is generated by a network device remotely located from a network device including the first processing element and the second processing element and is encrypted with a public key associated with the network device, and (ii) at least one hash value

associated with messages received and transmitted by the network device during the authentication handshaking protocol.

13. The method of claim **12**, wherein the passing of control of the authentication handshaking protocol upon receipt of the Client Key Exchange message further comprises the first processing element passing a first random number generated by the remotely located network device and a second random number generated internally within the network device to the second processing element.

14. The network device of claim **13**, wherein the completing of the authentication handshaking protocol further comprises computing a symmetric key based on the first value, the first random number and the second random number, the symmetric key being used as a key for secure communications with the remotely located network device in accordance with a symmetric key communication scheme.

15. The method of claim **10**, wherein the authentication handshaking protocol is a Transport Layer Security (TLS) Handshaking Protocol.

16. The method of claim **15**, wherein the commencing of the authentication handshaking protocol comprises performing initial stages of the TLS Handshaking Protocol by the first processing element being a data path (DP) processor.

17. The method of claim **16**, wherein the completing of the authentication handshaking protocol comprises completing the TLS Handshaking Protocol by the second processing element being a control path (CP) processor by computing a symmetric key that is used to maintain cryptographically secure communications with a network device physically separated from a network device including the DP processor and the CP processor.

18. Software stored on a non-transitory device storage medium and executed by multiple processing elements to perform the following operations:

commencing an authentication handshaking protocol based on execution of the software by a first processing element; and

upon receipt of a specific message, passing control of the authentication handshaking protocol from the first processing element to a second processing element, the second processing element completing the authentication handshaking protocol,

wherein the first processing element and the second processing element are physically located within the network device.

19. The software of claim **18**, wherein the first processing element and the second processing element are executing software to support the authentication handshaking protocol being a Transport Layer Security (TLS) Handshaking Protocol.

20. The software of claim **18** being instructions executed by a multi-core processor including a first processor core operating as the first processing element and a second processor core operating as the second processing element.

* * * * *