(19) **Japan Patent Office** (JP)

(12) **Japanese Unexamined Patent Application Publication** (A)

(11) Japanese Unexamined Patent Application Publication Number
2003-60953
(P2003-60953A)

(43) Publication date: February 28, 2003 (2.28.2003)

(51) Int. Cl.[7]	Identification codes	FI		Theme code (reference)
H04N 5/225		H04N 5/225	F	2H020
G03B 17/38		G03B 17/38	B	2H104
17/48		17/48		5C022
H04B 7/26		H04N 1/00	107Z	5C054
H04N 1/00	107	5/232	B	5C062

Request for examination: Not yet requested Number of claims: 13; OL (Total of 17 pages) Continued on the last page

(21) Application number: Japanese Patent Application 2001-246515 (P2001-246515)

(22) Date of application: August 15, 2001 (8.15.2001)

(71) Applicant: 000005201
Fuji Photo Film Co., Ltd.
210 Nakanuma, Minamiashigara-shi, Kanagawa-ken

(72) Inventor: Toshiyuki HIROISHI
% Fuji Photo Film Co., Ltd.
798 Miyanodai, Ashigarakami-gun, Kaisei-machi, Kanagawa-ken

(74) Agent: 100079049
Jun NAKAJIMA, Patent Attorney (3 other agents)

Continued on the last page

(54) (TITLE OF THE INVENTION) PHOTOGRAPHING SYSTEM, PHOTOGRAPHING METHOD, CAMERA, RECORDING MEDIUM, AND PROGRAM

(57) (ABSTRACT)
(PROBLEM) To obtain a photographing system, a photographing method, a camera, a recording medium and a program that allows a photographer him/herself to reliably take a self-portrait and accurately grasp the photographing timing.
(MEANS FOR SOLVING) A digital camera 50 acquires image information showing an object image, sequentially transmits the acquired image information to a mobile phone 40, and stores the acquired image information in a built-in storage means, upon receiving the release instruction information, which is the information for instructing the storage of the acquired image information. Furthermore, the mobile phone 40 receives the image information sent by the digital camera 50, displays the image shown by the received image information, and transmits the release instruction information to the digital camera 50 when a predetermined key is operated. Moreover, the digital camera 50 transmits to the mobile phone 40 the image information stored in the storage means, and in response to this, the mobile phone 40 transfers to a terminal device the image information received from the digital camera 50 together with the character information.

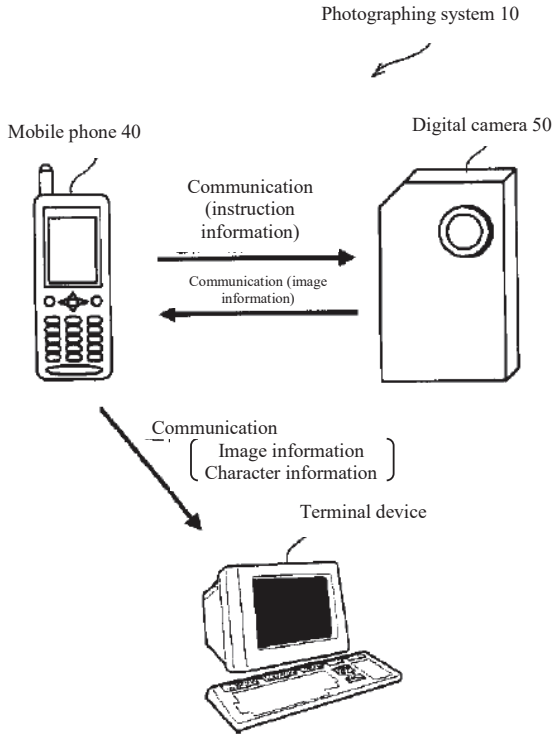

LifeScan, Inc. Ex. 1011
Page 1 of 17
IPR2025-00102

(Scope of Patent Claims)

(Claim 1) A photographing system, comprising

a camera equipped with an image information acquisition means for obtaining image information showing an object image, an image information transmission means for sequentially transmitting the image information obtained by the image information acquisition means, an instruction information receiving means for receiving release instruction information, which is the information for instructing the storage of the image information obtained by the image information acquisition means, and a storage means for storing the image information obtained by the image information acquisition means when the instruction information receiving means receives the release instruction information; and

an information terminal device provided with an image information receiving means for receiving the image information transmitted by the image information transmission means, a display means for displaying an image shown by the image information received by the image information receiving means, an operation means operated when the release instruction information is transmitted, and an instruction information transmission means for transmitting the release instruction information when the operation means is operated.

(Claim 2) The photographing system as recited in Claim 1, wherein the camera is built-in with the instruction information receiving means and the image information transmission means, and

the information terminal device is built-in with the instruction information transmission means and the image information receiving means.

(Claim 3) The photographing system as recited in Claim 1 or 2, wherein the image information transmission means transmits the stored image information stored in the storage means, wherein

the camera is further provided with an erasing means for deleting the stored image information transmitted by the image information transmission means from the storage means, and

the information terminal device is further provided with a transfer means for transferring to a predetermined transfer destination the stored image information received by the image information receiving means.

(Claim 4) The photographing system as recited in Claim 3, wherein the transfer means transmits to a transfer destination the character information on the stored image information when transferring to a predetermined transfer destination the stored image information received by the image information receiving means.

(Claim 5) A photographing method, wherein a camera obtains image information showing an object image, sequentially transmits the obtained image information, and stores in a storage means the image information obtained upon receiving the release instruction information, which is the information for instructing the storage of the obtained image information; and

an information terminal device receives the image information transmitted by the camera, displays an image shown by the received image information, and transmits the release instruction information when an operation means operated during the transmission of the release instruction information is operated.

(Claim 6) The photographing method as recited in Claim 5, wherein the camera transmits the stored image information stored in the storage means and subsequently deletes the transmitted stored image information from the storage means, and

the information terminal device transfers the stored image information received to a predetermined transfer destination.

(Claim 7) The photographing method as recited in Claim 6, wherein the information terminal device transfers to a predetermined transfer destination the character information on the stored image information when transferring the received stored image information to the transfer destination.

(Claim 8) A camera, comprising:

an image information acquisition means for obtaining image information showing an object image,

an image information transmission means for sequentially transmitting the image information obtained by the image information acquisition means,

an instruction information receiving means for receiving release instruction information, which is the information for instructing the storage of the image information obtained by the image information acquisition means, and

a storage means for storing the image information obtained by the image information acquisition means when the instruction information receiving means receives the release instruction information.

(Claim 9) The camera as recited in Claim 8, wherein the image information transmission means transmits the stored image information stored in the storage means, and

the camera is further provided with an erasing means for deleting from the storage means the stored image information transmitted by the image information transmission means.

(Claim 10) A recording medium, capable of being read by a computer in which a program that controls the operation of a camera is installed, wherein the program comprises

an image information transmission step of sequentially transmitting image information showing an object image,

an instruction information receiving step of receiving release instruction information, which is the information for instructing the storage of the image information, and

a storage step of storing the image information in a storage means when the release instruction information is received in the instruction information receiving step.

(Claim 11) The recording medium capable of being read by a computer as recited in Claim 10, wherein the medium is recorded with the program that further includes

a stored image transmission step of transmitting the stored image information stored in the storage means, and

a deletion step of deleting from the storage means the stored image information transmitted in the stored image transmission step.

(Claim 12) A program, for controlling the operation of a camera, wherein the program comprising:

an image information transmission step of sequentially transmitting the image information showing an object image, an instruction information receiving step of receiving the release instruction information, which is the information for instructing the storage of the image information, and

a storage step of storing the image information in a storage means upon receiving the release instruction information in the instruction information receiving step.

(Claim 13) The program as recited in Claim 12, wherein the program further includes a stored image transmission step of

LifeScan, Inc. Ex. 1011
Page 2 of 17
IPR2025-00102

transmitting the stored image information stored in the storage means, and

a deletion step of deleting from the storage means the stored image information transmitted in the stored image transmission step.

(Detailed Description of the Invention)

(0001)

(Technical Field to which the Invention belongs) The present invention pertains to a photographing system, a photographing method, a camera, a recording medium, and a program; in particular, the present invention pertains to a photographing system, a photographing method, a camera, a recording medium, and a program with which a photographer can simply and reliably captures a self-portrait.

(0002)

(Description of the Prior Art) When self-timer photographing is performed using a camera so that the photographer him/herself is included as an object, the following conventional method has been adopted: a photographer looks into a finder of the camera fixedly installed, assumes the position where he/she will stand in a photographing area, presses a release switch (the so-called shutter), moves to the standing position, and waits for the shutter to release.

(0003)

(Problem to be Solved by the Invention) However, with this method, the actual standing position of the photographer at the time of photographing may deviate from the assumed standing position, which in this case, may cause a problem that a portion of the body of the photographer may be cut-off from the print obtained by photographing. Furthermore, with this method, a shutter may be released while the photographer is moving to the standing position, causing a problem of the photographer being excluded in the print obtained by photographing. Furthermore, this method also poses a problem that the timing (the photographing timing) at which a shutter will release is difficult to grasp.

(0004) The present invention was made in order to solve the problems described above, and the objective of the present invention is to provide a photographing system, a photographing method, a camera, a recording medium, and a program that allows the photographer him/herself to take a self-portrait reliably and to grasp the photographing timing correctly.

(0005)

(Means for Solving the Problems) To achieve the objective described above, the photographing system as recited in Claim 1 comprises a camera equipped with an image information acquisition means for obtaining image information showing an object image, an image information transmission means for sequentially transmitting image information obtained by the image information acquisition means, an instruction information receiving means for receiving release instruction information, which is the information for instructing the storage of the image information obtained by the image information acquisition means, and a storage means for storing the image information obtained by the image information acquisition means when the instruction information receiving means receives the release instruction information; and an information terminal device provided with an image information receiving means for receiving the image information transmitted by the image information transmission means, a display means for displaying an image shown by the image information received by the image information receiving means, an operation means for performing an operation when the release instruction information is transmitted, and an instruction information transmission means for transmitting the release instruction information when the operation means is operated.

(0006) According to the photographing system as recited in Claim 1, a camera allows the image information acquisition means to obtain the image information showing an object image, and the image information transmission means to sequentially transmit the obtained image information.

(0007) On the other hand, in the invention as recited in Claim 1, the information terminal device allows the image information receiving means to receive the image information transmitted by the image information transmission means, and the display means to display the image shown by the received image information.

(0008) In this way, it is possible to confirm the object image shown by the image information obtained by the camera, by referring to the display means equipped in the information terminal device even at the position away from the camera.

(0009) The image information described above also includes motion picture information, in addition to still picture information. Transmission and reception of the image information by the image information transmission means and the image information receiving means include transmission and reception by a cable, in addition to wireless transmission and reception such as transmission and reception by radio waves and infrared rays. The display means includes all types of displays including a CRT display, a liquid crystal display, a plasma display, an organic EL (Electro Luminescence) display, and the like.

(0010) On the other hand, the information terminal device of the present invention is equipped with an operation means operated upon the transmission of the release instruction information, which is the information for instructing the storage of the image information obtained by the image information acquisition means, wherein the release instruction information is transmitted by the instruction information transmission means when the operation means is operated.

(0011) And in the camera of the present invention, when the release instruction information is received by the instruction information receiving means, the image information obtained by the image information acquisition means is stored in the storage means.

(0012) Namely, the release instruction information is the information for instructing the timing of photographing with the camera of the present invention, and in the present invention, the information terminal device is provided with a function for transmitting the release instruction information; therefore, it is possible to perform photographing with a camera even at a position away from the camera, by operating the operation means included in the information terminal device. Therefore, since the timing to operate the operation means serves as the photographing timing, a photographer can grasp the photographing timing correctly.

(0013) A switch, a button, and the like, are included in the operation means. Furthermore, the storage means includes memory elements such as RAM (Random Access Memory), EEPROM (Electrically Erasable and Programmable Read Only Memory), flash EEPROM, and the like;

LifeScan, Inc. Ex. 1011
Page 3 of 17
IPR2025-00102

portable storage media such as SmartMedia (registered trademark), CompactFlash (registered trademark), ATA (AT Attachment) card, floppy disks, CD-R (Compact Disc-Recordable), CD-RW (Compact Disc-ReWritable), and magneto-optical discs, and the like; and fixed recording media, such as hard disks, and the like.

(0014) Thus, according to the photographing system as recited in Claim 1, a camera acquires the image information showing an object image, sequentially transmits the acquired image information, and stores in a storage means the image information obtained upon receiving the release instruction information, which is the information for instructing the storage of the obtained image information; and an information terminal device receives the image information transmitted by the camera, displays the image shown by the received image information, and transmits the release instruction information when the operation means operated at the time of transmitting the release instruction information is operated; therefore, a self-portrait of a photographer him/herself can be reliably captured, and the photographing timing can be grasped correctly.

(0015) Existing devices having a display function and a communication function including mobile phones and notebook-type personal computers, and PDAs (Personal Data Assistants), or existing devices that allow built-in electronic boards or IC chips having a display function and a communication function added can be applied as the information terminal device of the present invention; existing cameras having a communication function or existing cameras that allow built-in electronic board or IC chips, that can be added with a communication function can be applied as the camera of the present invention. Thus, this system can be built at low cost by applying existing devices as the information terminal device and the camera of the present invention.

(0016) Furthermore, as in the case of the photographing system as recited in Claim 2, in the invention as recited in Claim 1, the camera preferably has the built-in instruction information receiving means and the image information transmission means, and the information terminal device has the built-in instruction information transmission means and the image information receiving means. In this way, it is possible to configure the camera and the information terminal device according to the present invention to be small in size and to build a user-friendly system.

(0017) In the invention as recited in Claim 1 or 2, the photographing system as recited in Claim 3 is a system wherein the image information transmission means transmits the stored image information stored in the storage means, the camera is further provided with an erasing means for deleting the stored image information transmitted by the image information transmission means from the storage means, and the information terminal device is further provided with a transfer means for transferring to a predetermined transfer destination the stored image information received by the image information receiving means.

(0018) According to the photographing system as recited in Claim 3, with the camera, the stored image information stored in the storage means is transmitted by the image information transmission means, and the transmitted stored image information is deleted from a storage means by the erasing means. In the present invention, with information terminal device, the stored image information received by the image information receiving means is transferred to a predetermined transfer destination by a transfer means.

(0019) Thus, according to the photographing system as recited in Claim 3, it is possible to produce the same effect as that in the invention as recited in Claim 1 or 2. Furthermore, with the camera, the stored image information stored in the storage means is transmitted, and the transmitted stored image information is deleted from a storage means; while with the information terminal device, the stored image information received is transferred to a predetermined transfer destination; therefore, the available storage capacity of the storage means can be increased.

(0020) In the invention as recited in Claim 3, the photographing system as recited in Claim 4 is where the transfer means transmits to the transfer destination the character information on the stored image information upon transferring to a predetermined transfer destination the stored image information received by the image information receiving means.

(0021) According to the photographing system as recited in Claim 4, with the information terminal device, a transfer means transmits to the transfer destination the character information on the stored image information upon transferring to a predetermined transfer destination the stored image information received by the image information receiving means.

(0022) Thus, according to the photographing system as recited in Claim 4, it is possible to produce the same effect as that in the invention as recited in Claim 3. Furthermore, with the information terminal device, the character information on the stored image information is transmitted to the transfer destination upon transferring the received stored image information to a predetermined transfer destination; therefore, the matters pertaining to the stored image information can be presented at the transfer destination.

(0023) On the other hand, to achieve the objective described above, the photographing method as recited in Claim 5 is wherein a camera obtains image information showing an object image, sequentially transmits the obtained image information, and stores in a storage means the image information obtained when release instruction information, which is the information for instructing the storage of the obtained image information is received; and an information terminal device receives the image information transmitted by the camera, displays an image shown by the received image information, and transmits the release instruction information upon the operation of an operation means operated during the transmission of the release instruction information.

(0024) Therefore, according to the photographing method as recited in Claim 5, similar effects as those in the invention as recited in Claim 1 are achieved; therefore, as in the invention as recited in Claim 1, the photographer him/herself can take a self-portrait reliably, and the photographing timing can be grasped correctly.

(0025) In the invention as recited in Claim 5, the photographing method as recited in Claim 6 is where the camera transmits the stored image information stored in the storage means and subsequently delete the transmitted stored image information from the storage means, and the information terminal device transfers the stored image information received to a predetermined transfer destination.

LifeScan, Inc. Ex. 1011
Page 4 of 17
IPR2025-00102

(0026) Therefore, according to the photographing method as recited in Claim 6, the same effect as that in the invention as recited in Claim 5 can be achieved, and the effect similar to that in the invention as recited in Claim 3 can also be achieved; therefore, the available storage capacity of a storage means can be increased in a similar manner as that in the invention as recited in Claim 3.

(0027) Furthermore, in the invention as recited in Claim 6, the photographing method as recited in Claim 7 is where the information terminal device transmits to a transfer destination the character information on the stored image information upon transmitting the received stored image information to a predetermined transfer destination.

(0028) Therefore, since according to the photographing method as recited in Claim 7, the same effect as that of the invention as recited in Claim 6 can be achieved, and a similar effect as that in the invention as recited in Claim 4 can also be achieved, where the matters pertaining to the stored image information can be presented to the transfer destination as in the case in the invention as recited in Claim 4.

(0029) On the other hand, to achieve the objective described above, the camera as recited in Claim 8 comprises an image information acquisition means for obtaining image information showing an object image, an image information transmission means for sequentially transmitting the image information obtained by the image information acquisition means, an instruction information receiving means for receiving the release instruction information, which is the information for instructing the storage of the image information obtained by the image information acquisition means, and a storage means for storing the image information obtained by the image information acquisition means when the instruction information receiving means receives the release instruction information.

(0030) According to the camera as recited in Claim 8, the image information showing an object image is obtained by an image information acquisition means, and the obtained image information is sequentially transmitted by the image information transmission means.

(0031) Therefore, by receiving the image information transmitted by the image information transmission means and displaying the image by the received image information, the object image shown by the image information obtained with the camera can be checked by referring to the display also at the position away from the camera.

(0032) The image information described above also includes motion picture information in addition to still picture information. Transmission of the image information by the image information transmission means includes a transmission by a cable, in addition to wireless transmission, such as transmission by radio waves and infrared rays.

(0033) On the other hand, with the camera of the present invention, when the release instruction information, which is the information for instructing the storage of the image information obtained by the image information acquisition means, is received by the instruction information receiving means, the image information obtained by the image information acquisition means is stored in the storage means.

(0034) That is, the release instruction information is the information for instructing the timing of photographing with the camera of the present invention. Therefore, it is possible to photograph a picture with a camera also at the position away from the camera, by transmitting the release instruction information at the timing one wishes to take a photograph with the camera of the present invention. Therefore, since the timing in which the release instruction information is transmitted serves as the photographing timing, the photographer can grasp the photographing timing correctly.

(0035) The storage means includes storage elements, such as RAM, EEPROM, flash EEPROM, and the like; portable recording media, such as smart media, CompactFlash, an ATA card, floppy disk, CD-R, CD-RW, magneto-optical disc, and the like; and fixed recording media, such as hard disk, and the like.

(0036) Thus, according to the camera as recited in Claim 8, the image information showing an object image is obtained, the obtained image information is sequentially transmitted, and when the release instruction information, which is the information for instructing the storage of the obtained image information, is received, the image information obtained is stored in the storage means; therefore, the photographer him/herself can take a self-portrait reliably, and the photographing timing can be grasped correctly.

(0037) In the invention as recited in Claim 8, the camera as recited in Claim 9 transmits the stored image information stored in the storage means by the image information transmission means, and is further provided with an erasing means for deleting the stored image information transmitted by the image information transmission means from the storage means.

(0038) According to the camera as recited in Claim 9, the stored image information stored in the storage means is transmitted by the image information transmission means, and the transmitted stored image information is deleted from the storage means by the erasing means.

(0039) Thus, according to the camera as recited in Claim 9, the same effect as that in the invention as recited in Claim 8 can be achieved, the stored image information stored in the storage means is transmitted, and the transmitted stored image information is deleted from the storage means; therefore, the available storage capacity in a storage means can be increased.

(0040) On the other hand, the recording media readable by a computer as recited in Claim 10 and Claim 11 are recording media for recording a program having the same effect as those in the invention as recited in Claim 8 and Claim 9 with respect to a camera, and the same effects as those in the invention as recited in Claim 8 and Claim 9 can be achieved by running the program recorded on these recording media. The recording medium includes all media readable by computers, such as storage elements, such as RAM, EEPROM, flash EEPROM, and the like; portable recording media, such as smart media, CompactFlash, ATA card, floppy disk, CD-R, CD-RW, magneto-optical disc, and the like; and fixed recording media, such as a hard disk, and the like.

(0041) Furthermore, the programs as recited in Claim 12 and Claim 13 are programs configured to have the same effect as those in the invention as recited in Claim 8 and Claim 9

LifeScan, Inc. Ex. 1011
Page 5 of 17
IPR2025-00102

with respect to a camera, and the same effect as those in the invention as recited in Claim 8 and Claim 9 can be achieved by running these programs.

(0042)

(Description of the Embodiments) Hereinafter, the embodiments of the invention will be described in details with reference to the accompanying drawings. First, with reference to FIG. 1, the basic structure of the photographing system 10 according to this embodiment will be described. As shown in the drawing, the photographing system 10 according to this embodiment is configured to include a mobile phone 40 and a digital camera 50 configured so as to allow two-way communication, and a terminal device configured so as to allow two-way communication with the mobile phone 40.

(0043) As shown in the drawing, the photographing system 10 according to this embodiment is a system wherein various keys provided to the mobile phone 40 are used to remotely operate the digital camera 50 by transmitting various instruction information from the mobile phone 40 to the digital camera 50.

(0044) When the digital camera 50 receives from the mobile phone 40 the instruction information for the purpose of transmitting the image information obtained by photographing, the photographing system 10 transmits the image information to the mobile phone 40, and the mobile phone 40 forwards the image information received from the digital camera 50 to a terminal device. In the case of the transfer of the image information from the mobile phone 40 to the terminal device, character information can also be transmitted to the terminal device along with the image information if needed.

(0045) The mobile phone 40 represents the information terminal device of the present invention, and the digital camera 50 represents the camera of the present invention.

(0046) Next, the configuration of the computer network 1 applied in order to achieve the photographing system 10 according to this embodiment will be described with reference to FIG. 2.

(0047) As shown in the drawing, the computer network 1 comprises the Internet 12, a public telephone network 14 built and provided by a telecommunications company of each country or each region as communication media. The public telephone network 14 includes, for example, PSTN (Public Switched Telephone Network) and ISDN (Integrated Service Digital Network).

(0048) Interconnection of the Internet 12 and the public telephone network 14 is established by a gateway system 32. The telephone network includes various types of wireless telephone networks 16A and 16B, such as PDC (Personal Digital Cellular) and PHS (Personal Handy-phone System). The wireless telephone networks 16A and 16B can provide function services, such as transmission and reception functions of data to a mobile phone 40, a caller ID authentication function , and other functions.

(0049) The Internet 12 is connected via a connection device 80, such as a modem, a router, or a TA (Terminal Adapter) to a terminal unit 20 owned by a DPE (Developing Printing Enlarging) store (hereinafter referred to as “a print shop”) in various places, a terminal unit 22 installed in the house of the user of the photographing system 10, and a terminal unit 24 installed in the house of the user’s friend. Mutual access of the terminal unit 20, the terminal unit 22, the terminal unit 24, and the mobile phone 40 on such a network is possible according to a predetermined communication protocol, such as TCP/IP (Transmission Control Protocol/Internet Protocol), or the like.

(0050) On the other hand, FIG. 3 shows the configuration of the electric system at the portion of the mobile phone 40 especially related to the present invention.

(0051) As shown in the same drawing, the mobile phone 40 is configured so as to be mutually connected by a bus with a CPU (central processing unit) 41 that is responsible for the entire operation of the mobile phone 40; a ROM 42 for recording various control programs, parameters, and so forth; a RAM 43 used as a work area, or the like, at the time of execution of various control programs; a communication control unit 44 for switching a control according to the voice communication in case of a telephone call, and the data communications by packet switching and for performing a communication control corresponding to each communication protocol; an operation unit 46 for detecting a pressing operation to a numeric keypad and other keys and outputting the signal corresponding to the operation to CPU 41; a display unit 47 for displaying a variety of information according to the displayed data supplied from CPU 41; a voice input/output unit 48 for converting an audio signal incorporated by a microphone to digital sound data and converting the received digital sound data to an analog voice signal to release a sound from a speaker; and a communication unit 49 for carrying out a communication corresponding to a predetermined communication protocol with the digital camera 50.

(0052) The communication control unit 44 is connected to a transceiver 45 for modulating carrier waves by the voice data for transmission or packet information under the control of the communication control unit 44, using these as a radio signal for the transmission from an antenna, and demodulating the radio signal received from the antenna to restore the voice data or packet information.

(0053) Two modes are prepared in the mobile phone 40 according to this embodiment: a telephone mode, which is a mode that operates as a telephone, and a photographing mode, which is a mode that allows the digital camera 50 to be operated remotely; wherein the operator of the mobile phone 40 uses the mobile phone 40 after specifying in advance which mode the phone is in.

(0054) FIG. 4 shows the structure of the portion in the digital camera 50 especially relevant to the present invention.

(0055) As shown in the drawing, the digital camera 50 is provided with a lens 51 for allowing an object image to form; a CCD (Charge-Coupled Device) 52 for capturing the object image arranged behind the optical axis of the lens 51 and formed by the lens 51, and for outputting it as an analog image signal; an A/D converter 53 for converting the analog image signal output from CCD 52 to digital image data; a

LifeScan, Inc. Ex. 1011
Page 6 of 17
IPR2025-00102

signal processing unit 54 for performing various signal processing to the digital image data obtained by A/D converter 53; a built-in memory 55 configured so as to mainly include an SDRAM (Synchronous Dynamic RAM) 55A for temporarily storing the digital image data obtained by photographing and a ROM 55B for storing in advance various control programs, predetermined parameters, etc.

(0056) The digital camera 50 is configured so as to allow an installation of an external memory 56 for storing the digital image data obtained by photographing.

(0057) The signal processing unit 54 is configured as 1-chip LSI (Large Scale Integrated circuit), thereby achieving miniaturization of and highly reliable digital camera 50 that can be produced at reduced cost. In the digital camera 50 according to this embodiment, a smart media excellent in convenience and versatility is adopted as the external memory 56.

(0058) The digital camera 50 is further provided with a liquid crystal display 57 for displaying an image obtained by photographing, various messages, and so on; a release switch 58 pressed and operated by an operator during photographing; and a communication unit 59 for performing communication corresponding to the predetermined communication protocol with the mobile phone 40.

(0059) The signal processing unit 54 is provided with a CPU 60 that is responsible for the entire operation of the digital camera 50; an image processing unit 61 for performing various image processing, such as processing for converting the digital image data of R (red), G (green), and B (blue) to luminance signal data and color difference signal data, edge enhancement processing and sharpness processing to the digital image data; a graphical data compression/decompression unit 62 for compressing digital image data according to a predetermined graphical data compression format or decompressing the compressed digital image data according to a decompression format corresponding to the compression format; a built-in memory controller 63 for controlling the transfer of a variety of information with the built-in memory 55; an external memory controller 64 for controlling the transfer of a variety of information with the external memory 56; and a display control unit 65 for controlling the operation of the liquid crystal display 57.

(0060) The CPU 60 in the signal processing unit 54 is mutually connected to the image processing unit 61, the graphical data compression/decompression unit 62, the built-in memory controller 63, the external memory controller 64, and the display control unit 65, where the operation of each unit can be controlled, and the input and output of the various data processed in each unit can be carried out.

(0061) The digital camera 50 according to this embodiment has two types of modes prepared: a remote operation mode, which is a mode that operates by a remote control using the mobile phone 40, and a normal photographing mode for performing a normal photographing operation according to the operation to various switches, such as the release switch 58 provided to the digital camera 50, without being operated by a remote control; and the camera is configured so as to be set to either mode according to the operation of the mode changeover switch (not shown) in the drawing, by an operator.

(0062) In the digital camera 50 according to this embodiment, various predetermined graphical data compression formats can be adopted; such formats include a JPEG (Joint Photographic Experts Group) format with respect to the digital image data of still picture and an MPEG (Moving Picture Experts Group) format with respect to the digital image data of motion picture.

(0063) On the other hand, the A/D converter 53 is connected to the signal processing unit 54, wherein the digital image data obtained by the A/D converter 53 is subjected to various image processing by the image processing unit 61 and compression processing by the graphical data compression/decompression unit 62.

(0064) A release switch 58 and a communication unit 59 are connected to the signal processing unit 54, and CPU 60 can always detect the state of user's operating the release switch 58, and control the communication with the mobile phone 40 by the communication unit 59.

(0065) Furthermore, the built-in memory 55 is connected to the built-in memory controller 63 of the signal processing unit 54, the external memory 56 is connected to the external memory controller 64, and the liquid crystal display 57 is connected to the display control unit 65, wherein CPU 60 can access the built-in memory 55 through the built-in memory controller 63, access the external memory 56 through the external memory controller 64, and displays the variety of information through the display control unit 65 on the liquid crystal display 57.

(0066) The photographing system 10 according to this embodiment is configured so as to perform a two-way wireless communication between the mobile phone 40 and the digital camera 50 through Bluetooth. Bluetooth is a wireless transfer standard that uses a 2.4 GHz bandwidth and does not require any license to use, and can perform transfer of data signals in the range within about 10 m.

(0067) Therefore, the communication unit 49 of the mobile phone 40 and the communication unit 59 of the digital camera 50 are configured so as to allow a communication according to the standard of Bluetooth, respectively. In this embodiment, the communication unit 49 is built in the mobile phone 40, and the communication unit 59 is built in the digital camera 50.

(0068) Next, various instruction information prepared in the photographing system 10 according to this embodiment will be described.

• Image transmission start instruction information ... is the information for instructing the transmission of the digital image data obtained by photographing continuously and in a time series.

• Image transmission end instruction information ... is the information for instructing the stop of the transmission of the digital image data started according to the image transmission start instruction information.

LifeScan, Inc. Ex. 1011
Page 7 of 17
IPR2025-00102

• Release instruction information ... is the information for instructing to perform the same operation as in the case of a pressing operation of the release switch 58.
• Thumbnail transmission instruction information ... is the information for instructing the transmission of the image data showing the thumbnail of the image shown according to the digital image data stored in SDRAM 55A.
• Selected image transmission instruction information ... is the information for instructing the transmission of the digital image data corresponding to the image chosen from the image shown by the thumbnails transmitted according to the thumbnail transmission instruction information by the operator of the mobile phone 40.
• Zoom-in instruction information ... is the information for instructing zoom-in.
• Zoom-out instruction information ... is the information for instructing zoom-out.
(0069) In addition to these instruction information, the instruction information for instructing various operations of the digital camera 50 are also prepared; however, the description thereof is omitted here.
(0070) CCD 52 represents the image information acquisition means of the present invention; the communication unit 59 represents the image information transmission means and the instruction information receiving means of the present invention; SDRAM 55A represents the storage means of the present invention; CPU 60 represents the erasing means of the present invention; the communication unit 49 represents the image information receiving means and the instruction information transmission means of the present invention; the display unit 47 represents the display means of the present invention; the KB key (also see FIG. 7) represents the operation means of the present invention; and the communication control unit 44 and the transceiver 45 represent the transfer means of the present invention.
(0071) Next, the operation of the photographing system 10 according to this embodiment will be described. First, with reference to FIG. 5, the digital camera processing performed by the digital camera 50 will be described. FIG. 5 is a flow chart showing the flow of processing of the digital camera processing program executed by CPU 60 built in the digital camera 50, when the electric power switch of the digital camera 50 (not shown) in the drawing, is turned on, wherein the program is stored in advance in the predetermined area of ROM 55B in the built-in memory 55. This will be described here on the assumption that the digital image data is input from A/D converter 53 to the signal processing unit 54 in a time series and a continuous manner.
(0072) In Step 100 of the same drawing, a determination is made as to whether a remote operation mode is set up by the mode changeover switch (not shown) in the drawing; if yes, the process goes to Step 104; if no, it is considered that a normal photographing mode has been set, the process goes to Step 102, and a normal photographing mode processing is performed. Since the normal photographing mode processing is the same as the processing performed with an existing digital camera, the detailed description thereof is omitted here.
(0073) In Step 104, [the camera] waits to receive the instruction information from the mobile phone 40 through the communication unit 59, and in the next step 106, a determination is made as to whether the instruction information received in Step 104 is the image transmission start instruction information; if yes, the process goes to Step 108, the image transmission processing for transmitting to the mobile phone 40 by the communication unit 59 is started after a predetermined image processing has been performed to the digital image data input from A/D converter 53, and the process subsequently returns to step 104.
(0074) The image processing performed here thins out the digital image data input from A/D converter 53 at a predetermined thinning rate and subsequently compresses the data by the graphical data compression/decompression unit 62. Thereby, the size of the digital image data transmitted to the mobile phone 40 can be made small, enabling high-speed transmission.
(0075) If no in Step 106, i.e., when the instruction information received from the mobile phone 40 in Step 104 is not the image transmission start instruction information, the process goes to Step 110.
(0076) In Step 110, a determination is made as to whether the instruction information received in Step 104 is the image transmission end instruction information; if yes, the process goes to Step 112, wherein the image transmission processing started according to the image transmission start instruction information is suspended, and the process subsequently returns to Step 104.
(0077) If no in Step 110, i.e., when the instruction information received from the mobile phone 40 in Step 104 is not the image transmission end instruction information, the process goes to Step 114.
(0078) In Step 114, a determination is made as to whether the instruction information received in Step 104 is the release instruction information; if yes, the process goes to Step 116, a predetermined image processing is performed to the digital image data input from A/D converter 53, the image recording processing for storing it in the photographed image data storage area (not shown) of SDRAM 55A is subsequently performed, and the process then returns to Step 104.
(0079) The image processing performed here is to compress the digital image data input from the A/D converter 53 by the graphical data compression/decompression unit 62 without thinning out. Thereby, the size of the digital image data can be made small without lowering the image quality, and the recording quantity of the digital image data to SDRAM 55A can be increased substantially. When the available storage capacity in the photographed image data storage area of SDRAM 55A becomes less than a specified quantity, the digital camera 50 is configured so that the digital image data stored in the photographed image data storage area is transmitted to the external memory 56.

LifeScan, Inc. Ex. 1011
Page 8 of 17
IPR2025-00102

(0080) If no in Step 114, i.e., when the instruction information received from the mobile phone 40 in Step 104 is not the release instruction information, the process goes to Step 118.

(0081) In Step 118, a determination is made as to whether the instruction information received in Step 104 is the thumbnail transmission instruction information; if yes, the process goes to Step 120, wherein image data that can display thumbnails is created by performing a predetermined image processing to the digital image data stored in the photographed image data storage area of SDRAM 55A (not shown), a thumbnail transmission processing for transmitting the image data to the mobile phone 40 is performed, and the process returns to Step 104 thereafter.

(0082) The image processing performed here is as follows: the graphical data compression/ decompression unit 62 decompresses all the compressed digital image data stored in SDRAM 55A, the image data is thinned at a predetermined thinning rate, the digital image data obtained thereby is used to create the image data with which thumbnails can be displayed, and the image data is compressed again by the graphical data compression/ decompression unit 62. Thereby, the size of the image data that can display thumbnails to be transmitted to the mobile phone 40 can be made small, enabling high-speed transmission.

(0083) If no in Step 118, i.e., when the instruction information received from the mobile phone 40 in Step 104 is not the thumbnail transmission instruction information, the process goes to Step 122.

(0084) In Step 122, a determination is made as to whether the instruction information received in Step 104 is the selected image transmission instruction information; if yes, the process goes to Step 124, wherein a selected image transmission processing is performed, the selected image transmission processing is that the digital image data corresponding to the image selected by the operator of the mobile phone 40 from a plurality of images shown by the thumbnails transmitted according to the thumbnail transmission instruction information is read from the photographed image data storage area of SDRAM 55A (not shown)is transmitted to the mobile phone 40, and in the following Step 126, the digital image data read in Step 124 is deleted from the photographed image data storage area of SDRAM 55A, and the process returns to Step 104.

(0085) If no in Step 122, i.e., when the instruction information received from the mobile phone 40 in Step 104 is not the selected image transmission instruction information, the process goes to Step 128.

(0086) In Step 128, a determination is made as to whether the instruction information received in Step 104 is other instruction information; if yes, the process goes to Step 130, wherein the processing according to the instruction shown by the instruction information is performed, and the process subsequently returns to Step 104; if no, the instruction information received from the mobile phone 40 is not the instruction information assumed, and the process returns to Step 104 described above without performing the processing in Step 130.

(0087) When the instruction information received from the mobile phone 40 is a zoom-in instruction information, zoom-in at a predetermined magnification level is performed in Step 130; when it is a zoom-out instruction information, zoom-out at a predetermined reduction rate is performed in Step 130.

(0088) Step 108 in a digital camera processing program represents the image information transmission step of the present invention; Step 104 represents the instruction information receiving step of the present invention; Step 116 represents the storage step of the present invention; Step 124 represents the stored image transmission step of the present invention; and Step 126 represents the deletion step of the present invention. Therefore, the digital camera processing program represents the program of the present invention, and ROM 55B represents the recording medium of the present invention.

(0089) Next, the mobile phone processing performed by the mobile phone 40 will be described with reference to FIG. 6. FIG. 6 is a flow chart showing the flow of processing of the mobile phone processing program run by CPU 41 built in the mobile phone 40 when the electric power switch of the mobile phone 40 (not shown) is turned ON, wherein the program is stored in advance in the predetermined region of ROM 42.

(0090) Once the electric power switch is turned ON, the mobile phone 40 according to this embodiment is configured so that the mode setting screen shown in FIG. 7(A) is displayed on the display unit 47, where the operator of the mobile phone 40 specifies a desired mode on this mode setting screen by pressing, for example, UB, DB, or KB key provided to the mobile phone 40.

(0091) So, in Step 200 shown in FIG. 6, [the phone] waits for an operator to specify a desired mode, and in the following Step 202, a determination is made as to whether the mode specified by the operator is a photographing mode; if yes, the process goes to Step 206; if no, an assumption is made that the mode specified is a telephone mode, wherein the process goes to Step 204, and the mobile phone 40 executes a telephone mode processing, which is a processing to allow the phone to work as a regular telephone. Since the telephone mode processing is the same as the processing performed with an existing mobile phone, the detailed description thereof is omitted here.

(0092) In Step 206, image transmission start instruction information is transmitted via the communication unit 49 to the digital camera 50. In response to this, the digital camera 50 performs Step 108 of the digital camera processing (also see FIG. 5) to start an image transmission processing.

(0093) So, in the following Step 208, [the phone] waits for the reception of the digital image data transmitted from the digital camera 50, and in the following Step 210, a decompression process is performed to the received digital image data, and the image shown according to this digital image data is displayed on the display unit 47.

LifeScan, Inc. Ex. 1011
Page 9 of 17
IPR2025-00102

(0094) FIG. 7 (B) shows an example of the screen displayed on the display unit 47 according to the processing performed in Step 210. As shown in the drawing, an image (object image) photographed with the digital camera 50 is displayed on the display unit 47.

(0095) As shown in the drawing, hereinafter, UB key of the mobile phone 40 is set to serve as the key to be operated upon the transmission of the zoom-in instruction information to the digital camera 50; DB key is set to serve as the key to be operated upon the transmission of the zoom-out instruction information to the digital camera 50; KB key is set to serve as the key to be operated upon the transmission of the release instruction information to the digital camera 50; MB key is set to serve as the key to be operated upon the transmission of the image transmission end instruction information to the digital camera 50; and SB key is set to serve as the key to be operated upon the end of a photographing mode.

(0096) Therefore, the operator of the mobile phone 40 presses the UB key or DB key to zoom-in or zoom-out the image being displayed on the display unit 47, presses the KB key to release the shutter of the digital camera 50, presses the MB key to suspend the display of the image on the display unit 47, or presses the SB key to end a photographing mode.

(0097) So, in the following Step 212, [the phone] waits until an operator presses any key from UB, DB, KB, MB, or SB key, and in the following Step 214, a determination is made as to whether the operator ends a photographing mode by determining whether the key specified by pressing the key in Step 212 is SB key; if yes, the process shifts to Step 216, upon which the image transmission end instruction information is transmitted via the communication unit 49 to the digital camera 50, and the process returns to Step 200. In response to the transmission of this image transmission end instruction information, the digital camera 50 executes Step 112 of the digital camera processing described above to stop the image transmission processing. The mode setting screen shown in FIG. 7(A) is displayed again on the display unit 47 upon performing the processing in Step 200 again.

(0098) If no in Step 214, that is, when the operator does not specify the end of the photographing mode, the process goes to Step 218, wherein a determination is made as to whether the operator specifies the transmission of the release instruction information by determining whether the key determined to have been pressed in Step 212 is the KB key; if yes, the process goes to Step 220, where the release instruction information is transmitted via the communication unit 49 to the digital camera 50, and the process returns to Step 208. In response to the transmission of this release instruction information, the digital camera 50 executes the image recording processing in Step 116 of the digital camera processing.

(0099) If no in Step 218, that is, when the operator does not specify the transmission of the release instruction information, the process goes to Step 222, wherein a determination is made as to whether the operator has specified the transmission of the image transmission end instruction information by determining that the key determined to have been pressed in Step 212 is the MB key; if no, an assumption is made a key other than SB key, KB key, and MB key has been pressed, the process goes to Step 224, upon which the instruction information corresponding to the key pressed is transmitted to the digital camera 50 via the communication unit 49, and the process goes to Step 208. Examples of the instruction information transmitted to the digital camera 50 in Step 224 include zoom-in instruction information when UB key is operated, and zoom-out instruction information when the DB key is operated.

(0100) As long as the operator does not specify the end of the photographing mode by the repetition of the processing from Step 208 to Step 224, the image acquired by photographing using the digital camera 50 is displayed continuously in a time series on the display unit 47.

(0101) The operator checks to make sure that the object to be photographed is in a suitable photographing state and not outside the range of photographing area by the digital camera 50, while referring to the image displayed on the display unit 47, and presses the KB key while informing the shutter timing to a person sitting with him/her; thereby, it is possible to avoid some part of the photographer's body from being cut-off from the print eventually obtained, or the photographer not included in the print. Since the cut-off timing of a shutter becomes substantially identical with the operation timing of the KB key operated by the photographer him/herself, it is also possible to solve the problem occurred in the prior art of an unclear timing when a shutter cuts-off.

(0102) If yes in Step 222, that is, when the operator has specified the transmission of the image transmission end instruction information, the process goes to Step 226, wherein the image transmission end instruction information is transmitted via the communication unit 49 to the digital camera 50, and the thumbnail transmission instruction information is subsequently transmitted via the communication unit 49 to the digital camera 50 in Step 228. In response thereto, the digital camera 50 stops the image transmission processing performed in Step 112 of the digital camera processing described above, the thumbnail transmission processing is subsequently performed in Step 120, and the image data for displaying thumbnails is transmitted to the mobile phone 40.

(0103) The role assignment of each key shown in FIG. 7(B) is cancelled if yes in Step 222.

(0104) In the following Step 230, [the phone] waits until it receives the image data that can display the thumbnail from the digital camera 50, and in the following

LifeScan, Inc. Ex. 1011
Page 10 of 17
IPR2025-00102

Step 232, after a decompression process is performed to the received image data, the thumbnail shown according to the image data is displayed on the display unit 47.

(0105) FIG. 7(C) shows an example of thumbnails displayed on the display unit 47 according to the processing performed in Step 232. As shown in the same drawing, a plurality of images (four images in this drawing) shown according to the digital image data stored in the photographed image data storage area of SDRAM 55A according to the photographing by the digital camera 50 is displayed on the display unit 47 as thumbnails. Once the thumbnails are displayed on the display unit 47, an operator presses the UB, DB, or KB key provided on the mobile phone 40 to select a desired image (the image [the operator] desires to request a print shop to make prints (also see FIG. 2) or the image for which [the operator] desires to transmit the digital image data to a terminal unit 22 installed at home or a terminal unit 24 installed at a friend's house) from the thumbnails.

(0106) Then, in the following Step 234, [the phone] waits for the end of selection of the desired image requested by the operator, and in the following Step 236, the information that can specify the image selected by the operator and the selected image transmission instruction information are transmitted to the digital camera 50 via the communication unit 49. In response thereto, the digital camera 50 transmits to the mobile phone 40 the digital image data corresponding to the image selected by the operator by performing the selected image transmission processing in the above described Step 124 of the digital camera processing, and then the digital image data corresponding to the image chosen by the operator in Step 126 is deleted from SDRAM 55A.

(0107) In the following Step 238, [the phone] waits for the reception of the digital image data transmitted from the digital camera 50, and in the following Step 240, a predetermined image transfer screen is displayed on the display unit 47.

(0108) FIG. 7(D) shows the image transfer screen displayed on the display unit 47 according to the processing performed in Step 240. As shown in the same drawing, a rectangular frame for entering the information showing the desired transfer destination to transmit the digital image data received from the digital camera 50, i.e., the digital image data corresponding to the image on the thumbnail selected by the operator, is displayed on the image transfer screen according to this embodiment.

(0109) A rectangular frame for entering the number of sheets to print and a rectangular frame for entering the scheduled time to pick up the print are also displayed on the image transfer screen shown in this drawing to facilitate the entry of the information showing the terminal unit 20 of a print shop as the transfer destination.

(0110) When such an image transfer screen is displayed on the display unit 47, an operator enters the information showing the transfer destination of the digital image data received in Step 238 (according to this embodiment, an e-mail (electronic mail) address of the terminal unit of the transfer destination) and the number of sheets to be printed and the scheduled pick-up date and time specifying the terminal unit 20 of a print shop as the transfer destination using the numeric keypad (not shown) or the like, provided on the mobile phone 40 within the corresponding rectangular frame.

(0111) So, in the following Step 242, the device waits for the operator to finish entering each information on the image transfer screen, and in the following Step 244, the digital image data received in Step 238 is transmitted to the transfer destination shown using the information entered by the operator, and when the terminal unit 20 of any print shop has been specified as the transfer destination, the information showing the number of sheets to be printed and the scheduled pick-up date and time to receive the print entered on the image transfer screen is transmitted, and then this mobile phone processing is ended.

(0112) In the case where the terminal unit 20 of any print shop has been specified as the transfer destination, in the print shop that received the digital image data and the information showing the number of sheets to be printed and the scheduled pick-up date and time to receive the print(s), the received digital image data is decompressed, this digital image data is then used to create the print[s] with a digital mini lab machine in the number of sheets to be printed according to the information received by the pick-up date and time shown according to the information received.

(0113) In this way, the operator of the mobile phone 40 can receive the prints in a specified number of sheets with no waiting time, by going to the print shop to receive the prints after the scheduled pick-up date and time specified. In the print shop, a customer who orders a print can be identified using the authentication function of the caller ID of the mobile phone 40 provided by wireless telephone networks 16A and 16B.

(0114) When the terminal unit 22 at home or the terminal unit 24 at a friend's house is specified as the transfer destination, the digital image data received from the mobile phone 40 is stored in a predetermined area of a built-in storage device (not shown) in the terminal unit 22 or the terminal unit 24. In this way, the digital image data received from the mobile phone 40 can be arbitrarily used.

(0115) As described in details above, the photographing system 10 according to this embodiment allows the digital camera 50 to acquire the digital image data showing an object image, sequentially transmit the acquired digital image data to the mobile phone 40, store in SDRAM 55A the digital image data acquired upon the reception of the release instruction information, which is the information for instructing the storage of the acquired digital image data, and allows the mobile phone 40 to receive the digital image data transmitted from the digital camera 50, display the image shown according to the received digital image data on the display unit 47, and transmit the release instruction information to the digital camera 50 when KB key is operated; therefore, the photographer him/herself can be reliably photographed, and the photographing timing can be grasped correctly.

(0116) The photographing system 10 according to this embodiment includes a built-in communication unit 59 in the digital camera 50 and a built-in communication unit 49

LifeScan, Inc. Ex. 1011
Page 11 of 17
IPR2025-00102

in the mobile phone 40; therefore, it is possible to configure the digital camera 50 and the mobile phone 40 to be small, and it is possible to build a user-friendly system.

(0117) The photographing system 10 according to this embodiment allows the digital camera 50 to transmit the digital image data stored in SDRAM 55A, subsequently delete the transmitted digital image data from SDRAM 55A, and allows the mobile phone 40 to transfer the received digital image data to a predetermined transfer destination; therefore, the available storage capacity of SDRAM 55A can be increased.

(0118) The photographing system 10 according to this embodiment allows the mobile phone 40 to transmit to the transfer destination the character information on the digital image data upon the transfer of the received digital image data to the predetermined transfer destination; therefore, the information on the digital image data can be presented to the transfer destination.

(0119) The digital camera 50 according to this embodiment acquires the digital image data showing an object image, sequentially transmits the acquired digital image data to the mobile phone 40, and stores in SDRAM 55A the digital image data acquired upon the reception of the release instruction information, which is the information for instructing the storage of the acquired digital image data; therefore, the photographer him/herself can be photographed reliably, and the photographing timing can be grasped correctly.

(0120) The digital camera 50 according to this embodiment deletes the transmitted digital image data from SDRAM 55A after the digital image data stored in SDRAM 55A has been transmitted; therefore, the available storage capacity of SDRAM 55A can be increased.

(0121) In this embodiment, the case where Bluetooth is applied as a standard of communication for the communication unit 49 and the communication unit 59 has been described; however, the present invention is not limited thereto; for example, a standard such as an IrDA (Infrared Mobile Communication) system using infrared rays may also be adopted. Also in this case, the same effects as those in this embodiment can be produced.

(0122) In this embodiment, a print shop from where one can order a print is known, wherein the case where the terminal unit 20 installed at the print shop is specified as the transfer destination of the digital image data has been described; however, the present invention is not limited thereto; for example, the mobile phone 40 may be provided with a WWW (World Wide Web) browser, wherein this browser allows a user to search the terminal unit 20 installed at the print shop located at the location nearest to a photographing site and to order a print. This improves convenience since a print can be ordered from a nearby print shop.

(0123) The case where a still picture is recorded by the digital camera 50 has been described in this embodiment; however, the present invention is not limited thereto; for example, a motion picture can also be recorded. In this case, the information showing the recording period of video data with the mobile phone 40 is transmitted to the digital camera 50, and the digital image data showing the video obtained by photographing with the digital camera 50 during the recording period is stored in SDRAM 55A. Also in this case, the same effect as this embodiment can be produced.

(0124) Furthermore, the flow of processing of each processing program described in this embodiment (refer to FIG. 5 and FIG. 6) is one example, and it shall be readily understood that appropriate modifications are possible within the scope that does not deviate from the main gist of the present invention.

(0125)

(Effect of the Invention) As described in details above, according to the photographing system and photographing method of the present invention, a camera acquires the image information showing an object image, sequentially transmits the obtained image information, and stores in a storage means the image information obtained upon the reception of the release instruction information, which is the information for instructing the storage of the obtained image information; while an information terminal device receives the image information transmitted from the camera, displays the image shown by the received image information, and transmits the release instruction information upon the operation of the operation means operated when the release instruction information is transmitted; therefore, the photographer him/herself can be photographed reliably and the photographing timing can be grasped correctly.

(0126) According to the camera, recording medium, and program of the present invention, the image information showing an object image is acquired, the obtained image information is sequentially transmitted, and the image information obtained is stored in the storage means upon the reception of the release instruction information, which is the information for instructing the storage of the obtained image information; therefore, the photographer him/herself can be photographed reliably, and the photographing timing can be grasped correctly.

(Brief Description of the Drawings)

(FIG. 1) is a schematic view showing the basic configuration of the photographing system 10 according to an embodiment.

(FIG. 2) is a block diagram showing the entire configuration of the photographing system 10 according to an embodiment.

(FIG. 3) is a block diagram showing the configuration of the electric system of the portion in the mobile phone 40 especially relevant to the present invention according to an embodiment.

(FIG. 4) is a block diagram showing the configuration of the portion in the digital camera 50 especially relevant to the present invention according to an embodiment.

(FIG. 5) is a flow chart showing the flow of processing of the digital camera processing program according to an embodiment.

(FIG. 6) is a flow chart showing the flow of processing of the mobile phone processing program according to an embodiment.

(FIG. 7) is a schematic view showing an example of the screen displayed on the display unit 47 of the mobile phone 40 by the execution of the mobile phone processing

LifeScan, Inc. Ex. 1011
Page 12 of 17
IPR2025-00102

program according to an embodiment.
(Explanations of References)
10 Photographing system
20, 22, and 24 Terminal units
40 Mobile phone (information terminal device)
41 CPU
42 ROM
44 Communication control unit (transfer means)
45 Transceiver (transfer means)
47 Display unit (display means)
49 Communication unit (image information receiving means and instruction information transmission means)
50 Digital camera (camera)
52 CCD (image information acquisition means)
55A SDRAM (storage means)
55B ROM (recording medium)
59 Communication unit (image information transmission means and instruction information receiving means)
60 CPU (erasing means)
KB Key (operation means)

(FIG. 1)

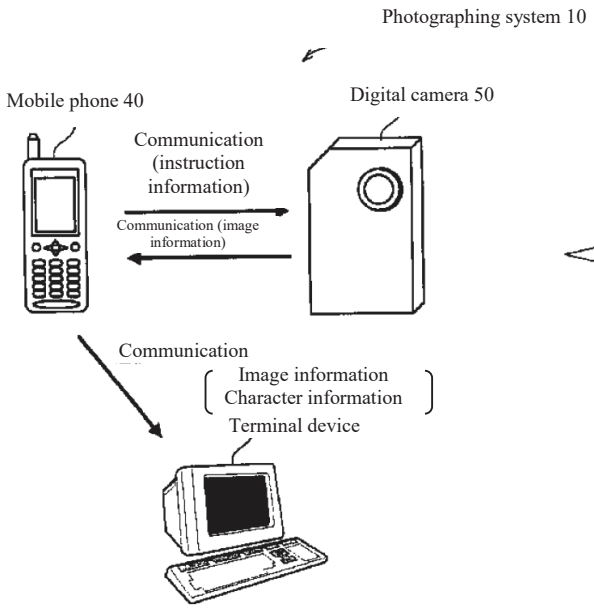

(FIG. 3)

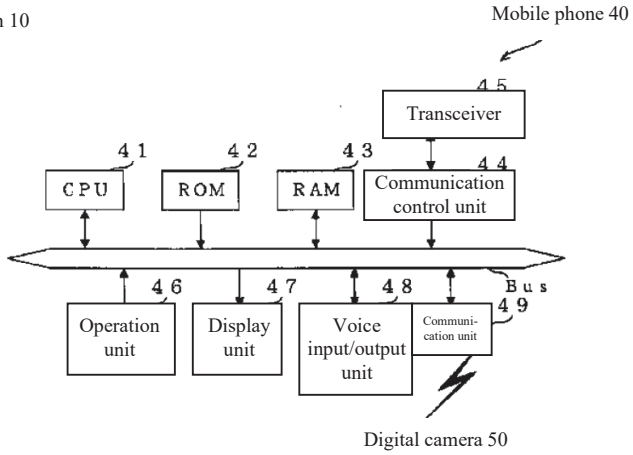

(FIG. 2)

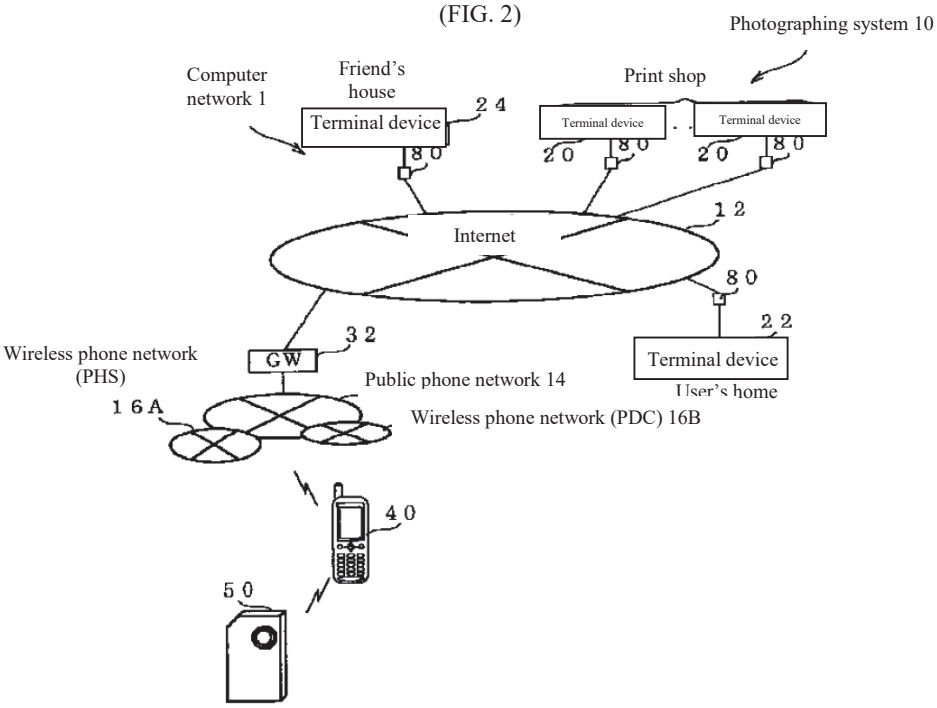

(FIG. 4)

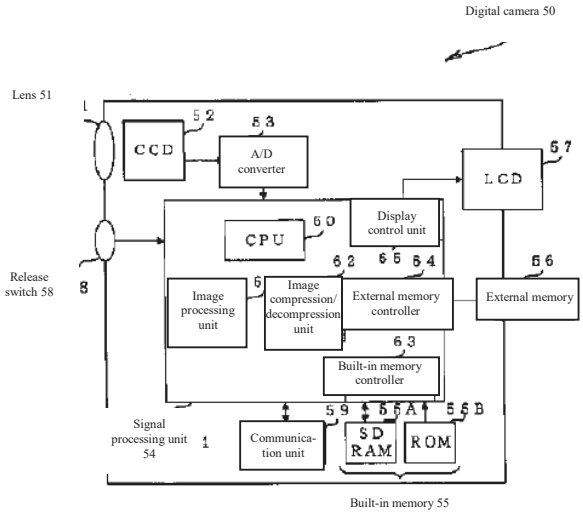
Digital camera 50
Lens 51
CCD
52
53
A/D converter
LCD
57
CPU
60
Display control unit
62
65
64
56
Release switch 58
8
Image processing unit
Image compression/ decompression unit
External memory controller
External memory
63
Built-in memory controller
59
55A
55B
Signal processing unit 54
1
Communica-tion unit
SD RAM
ROM
Built-in memory 55

(FIG. 7)

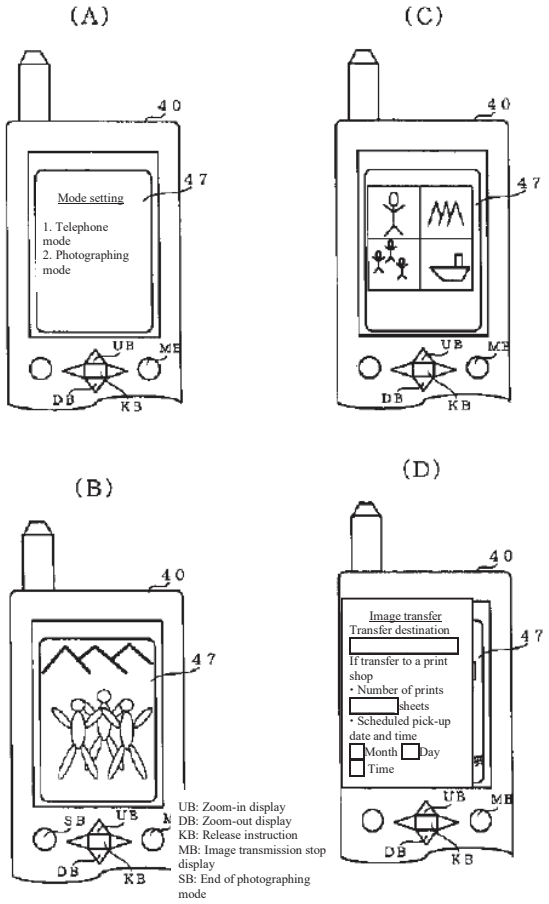
(A)
40
47
Mode setting
1. Telephone mode
2. Photographing mode
UB
MB
DB
KB
(C)
40
47
UB
MB
DB
KB
(B)
40
47
SB
UB
DB
KB
UB: Zoom-in display
DB: Zoom-out display
KB: Release instruction
MB: Image transmission stop display
SB: End of photographing mode
(D)
40
47
Image transfer
Transfer destination
If transfer to a print shop
• Number of prints
sheets
• Scheduled pick-up date and time
Month
Day
Time
UB
MB
DB
KB

(FIG. 5)

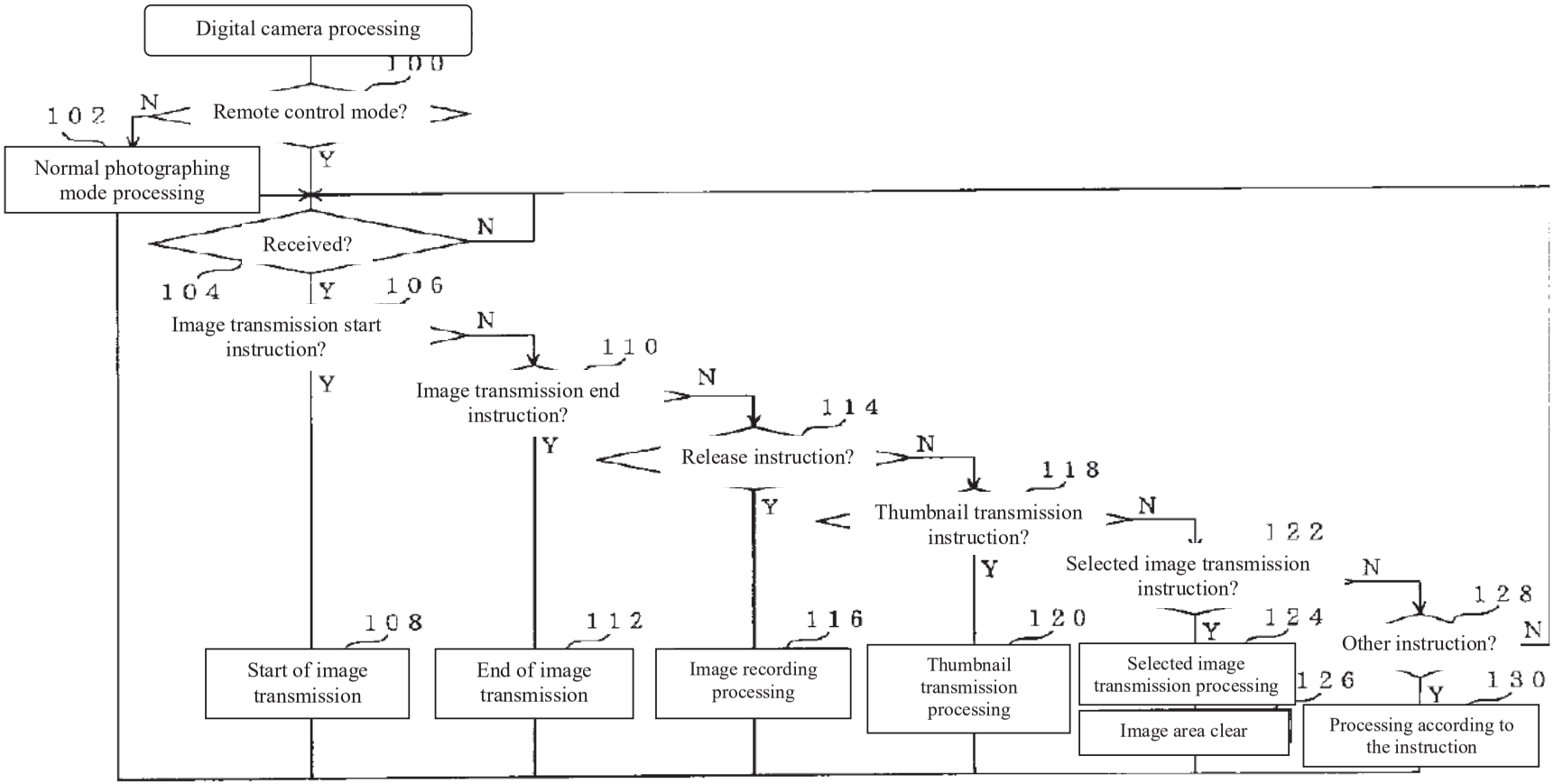
Digital camera processing
100
Remote control mode?
N
102
Normal photographing mode processing
Y
Received?
N
104
Y
106
Image transmission start instruction?
N
110
Image transmission end instruction?
N
114
Release instruction?
N
118
Thumbnail transmission instruction?
N
122
Selected image transmission instruction?
N
128
Other instruction?
N
Y
Y
Y
Y
Y
108
Start of image transmission
112
End of image transmission
116
Image recording processing
120
Thumbnail transmission processing
124
Selected image transmission processing
126
Image area clear
130
Processing according to the instruction

(FIG. 6)

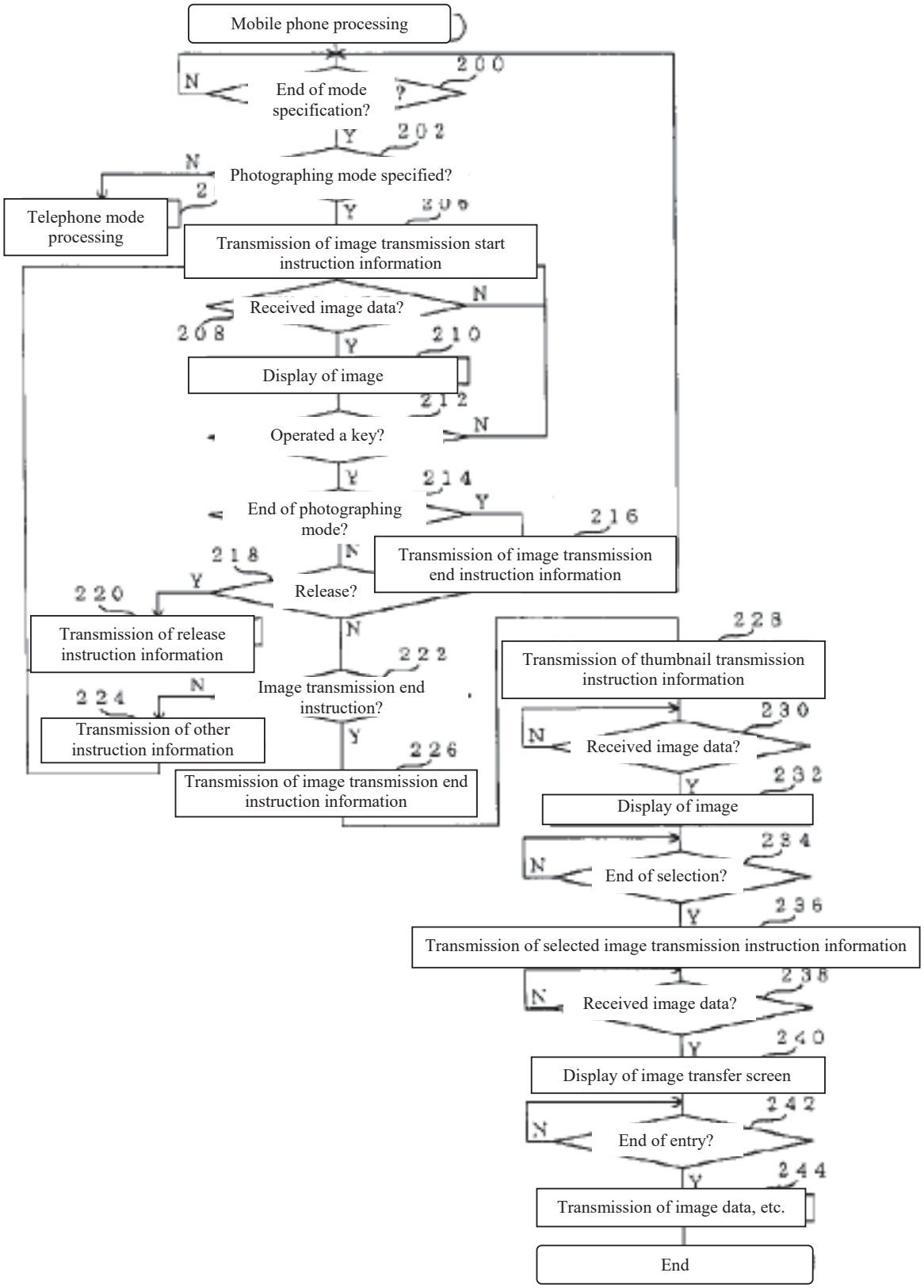
Mobile phone processing
200
End of mode specification?
N
Y
202
Photographing mode specified?
N
Telephone mode processing
Y
Transmission of image transmission start instruction information
Received image data?
N
208
Y
210
Display of image
212
Operated a key?
N
Y
214
End of photographing mode?
Y
216
Transmission of image transmission end instruction information
218
N
Release?
Y
220
Transmission of release instruction information
N
222
Image transmission end instruction?
N
224
Transmission of other instruction information
Y
226
Transmission of image transmission end instruction information
228
Transmission of thumbnail transmission instruction information
230
N
Received image data?
Y
232
Display of image
234
N
End of selection?
Y
236
Transmission of selected image transmission instruction information
238
N
Received image data?
Y
240
Display of image transfer screen
242
N
End of entry?
Y
244
Transmission of image data, etc.
End

Continued from the front page

(51)Int.Cl.7	Identification codes	F I	Theme code (reference)
H04N 5/232		H04N 7/18	E 5K067
7/18		101:00	
// H04N 101:00		H04B 7/26	M

F term (reference) 2H020 FB01
2H104 AA16
5C022 AA13 AB65 AC42 AC69
5C054 AA02 AA05 CC02 DA07 DA09
FA04 GD07
5C062 AA01 AA37 AB12 AB13 AB20
AB25 AB38 AB41 AB42 AC02
AC05 AC22 AC34 AE03 AE08
AE16
5K067 AA34 BB04 BB28 DD52 EE02
EE12 GG11 HH23

LifeScan, Inc. Ex. 1011
Page 17 of 17
IPR2025-00102