US008385950B1

(12) **United States Patent**
**Wagner et al.**

(10) **Patent No.: US 8,385,950 B1**
(45) **Date of Patent: Feb. 26, 2013**

(54) **CAPTURING AND AUTOMATICALLY UPLOADING MEDIA CONTENT**

(75) Inventors: **Mark Wagner**, Clyde Hill, WA (US); **Thomas H. Taylor**, Redmond, WA (US); **David P. Conway**, Los Altos, CA (US)

(73) Assignee: **Google Inc.**, Mountain View, CA (US)

( * ) Notice: Subject to any disclaimer, the term of this patent is extended or adjusted under 35 U.S.C. 154(b) by 1222 days.

(21) Appl. No.: **11/937,976**

(22) Filed: **Nov. 9, 2007**

(51) **Int. Cl.**
*H04W 4/00* (2009.01)

(52) **U.S. Cl.** ..... **455/466**; 455/414.2; 455/457; 715/751; 715/748; 715/752; 715/762; 715/738; 715/838; 709/203; 709/219

(58) **Field of Classification Search** ..... 455/466, 455/414.2, 457; 709/219, 203
See application file for complete search history.

(56) **References Cited**

U.S. PATENT DOCUMENTS

| | | | | |
|---|---|---|---|---|
| 6,784,925 | B1 * | 8/2004 | Tomat et al. | 348/207.11 |
| 7,034,880 | B1 * | 4/2006 | Endsley et al. | 348/333.11 |
| 7,551,210 | B2 * | 6/2009 | Katayama | 348/231.3 |
| 7,639,943 | B1 * | 12/2009 | Kalajan | 396/429 |
| 2002/0138619 | A1 * | 9/2002 | Ramaley et al. | 709/226 |
| 2004/0004737 | A1 * | 1/2004 | Kahn et al. | 358/1.15 |
| 2004/0177117 | A1 | 9/2004 | Huang | |
| 2006/0107297 | A1 * | 5/2006 | Toyama et al. | 725/105 |
| 2008/0108301 | A1 * | 5/2008 | Dorenbosch | 455/3.06 |
| 2008/0188180 | A1 * | 8/2008 | Rahja | 455/41.2 |

OTHER PUBLICATIONS

JVC's new Everio S Series GZ MS100, May 19, 2008, available at http://www.engadget.com/2008/05/19/jvcs-new-everio-s-series-gz-ms100-camcorder-does-youtube-littl/retrieved Jun. 23, 2008, 4 pages.

Dumas, "Totally Awesome: Eye-Fi Card Reader Uploads Digital Pies Via Wi-Fi" available at http://blog.wired.com/gadgets/2007/10/totally-awesome.html, Oct. 30, 2007, 3 pages.

The ShoZu blog, "Your online social life . . . in your pocket!" available at http://shozu.vox.com/library/posts/page/4/4, printed Nov. 7, 2008, 10 pages.

flickr™ available at http://www.flickr.com/tour/upload, retrieved Dec. 5, 2007, 2 pages.

Twango, available at http://www.twango.com/tour/overview, retrieved Dec. 5, 200, 12 pages.

iPhoneSlide, available at http://www.iphonslide.com/, retrieved Dec. 5, 2007, 7 pages.

Polaroid's internet-ready camera, available at http://www.imaging-resource.com/NEWS/992040674.html, retrieved Oct. 31, 2007, 6 pages.

* cited by examiner

*Primary Examiner* — Kwasi Karikari
(74) *Attorney, Agent, or Firm* — Fish & Richardson P.C.

(57) **ABSTRACT**

A computer-implemented method for automatically uploading media content from a mobile device to an online service provider can include receiving, in the mobile device, identifying information corresponding to a user account associated with at least one of a plurality of online service providers; capturing media content with a media input component included in the mobile device; and after the media content is captured, automatically uploading to the at least one online service provider the captured media content and the identifying information, without receiving user input contemporaneous with the automatic uploading that specifies that the captured media content is to be uploaded. The mobile device can further include a wireless communication component configured to wirelessly send data to and wirelessly receive data from the plurality of online service providers, which can be external to the mobile device.

**25 Claims, 10 Drawing Sheets**

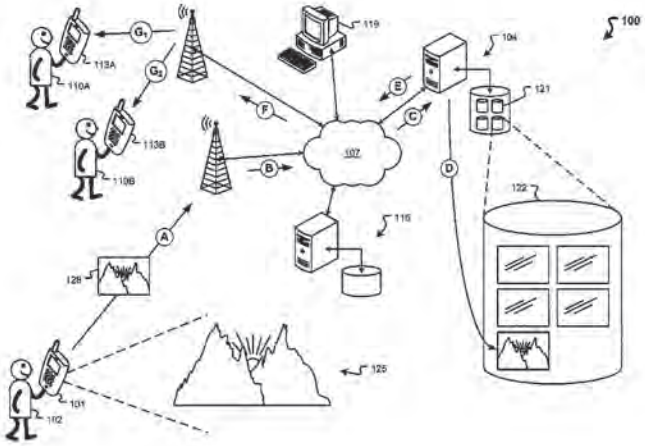

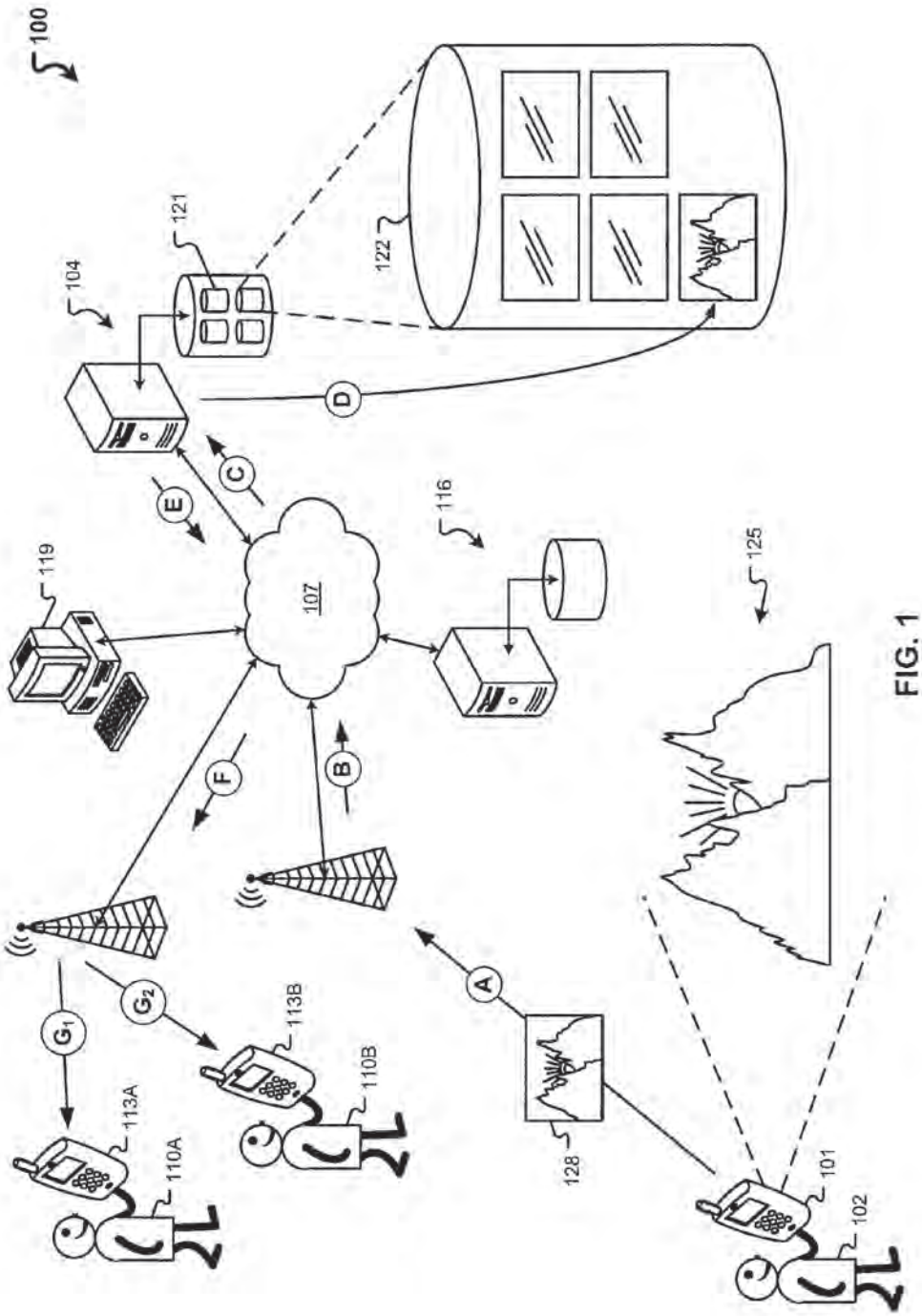
100
104
121
122
D
C
E
119
107
116
125
F
B
A
G1
G2
113A
110A
113B
110B
128
101
102

FIG. 1

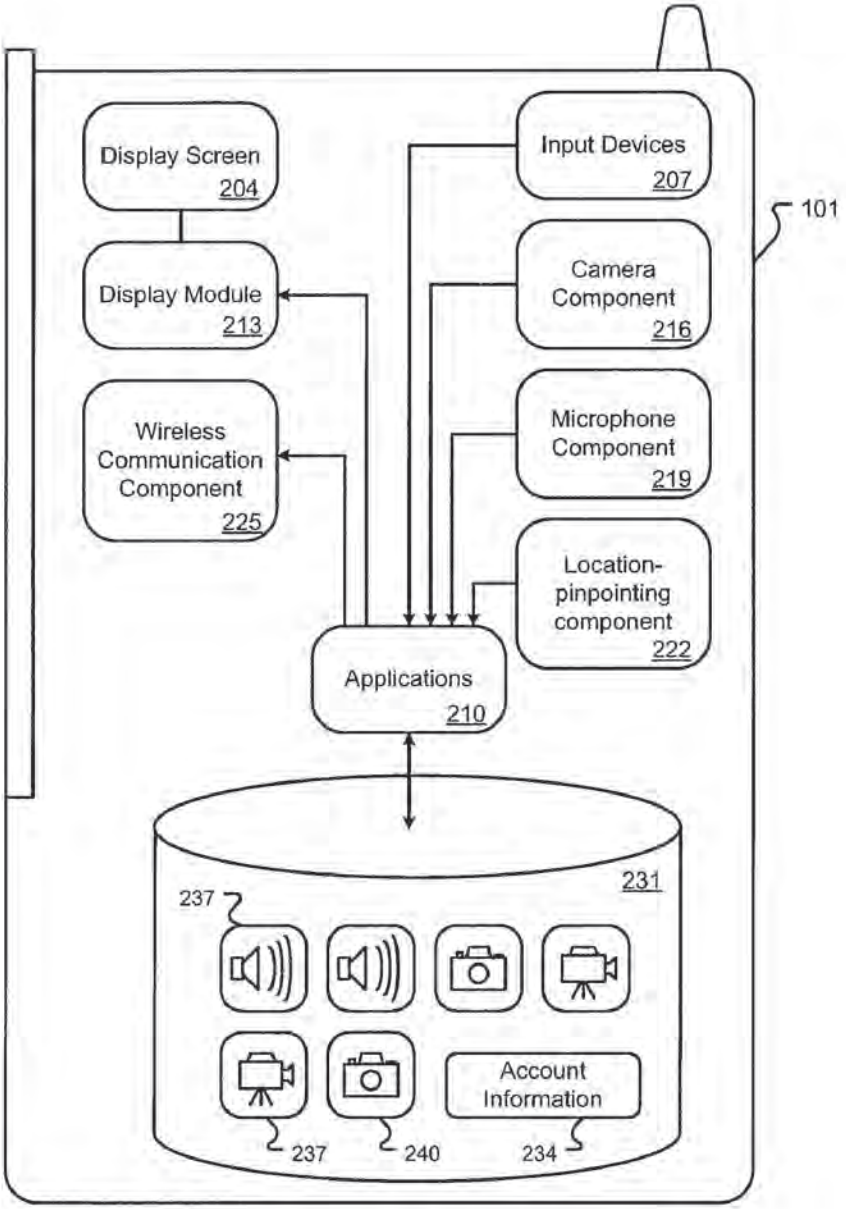
Display Screen
204
Input Devices
207
101
Display Module
213
Camera
Component
216
Wireless
Communication
Component
225
Microphone
Component
219
Location-
pinpointing
component
222
Applications
210
231
237
Account
Information
237
240
234

FIG. 2

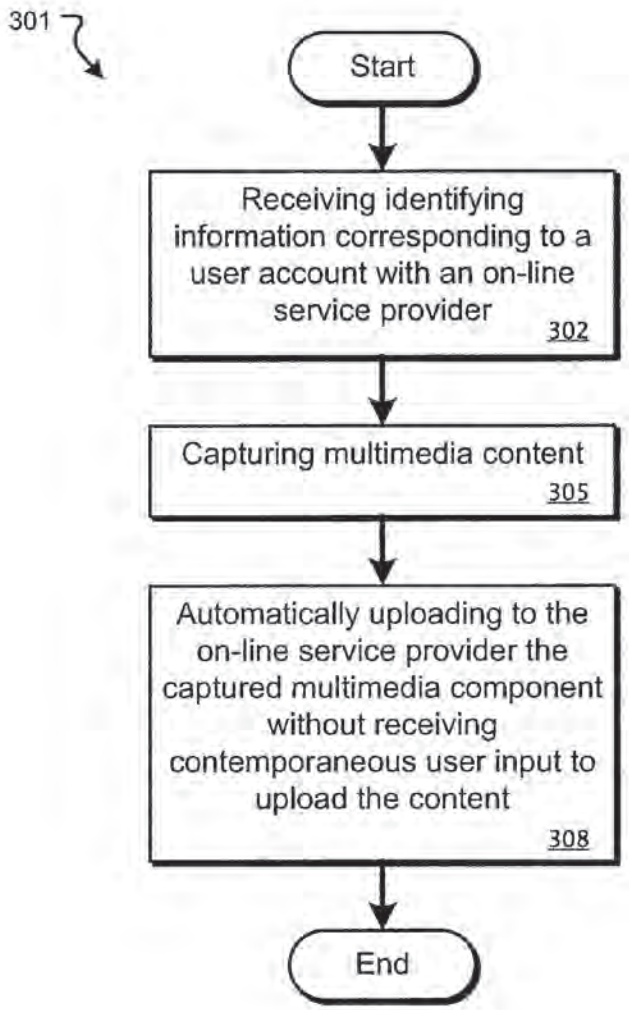
301
Start
Receiving identifying information corresponding to a user account with an on-line service provider
302
Capturing multimedia content
305
Automatically uploading to the on-line service provider the captured multimedia component without receiving contemporaneous user input to upload the content
308
End

FIG. 3

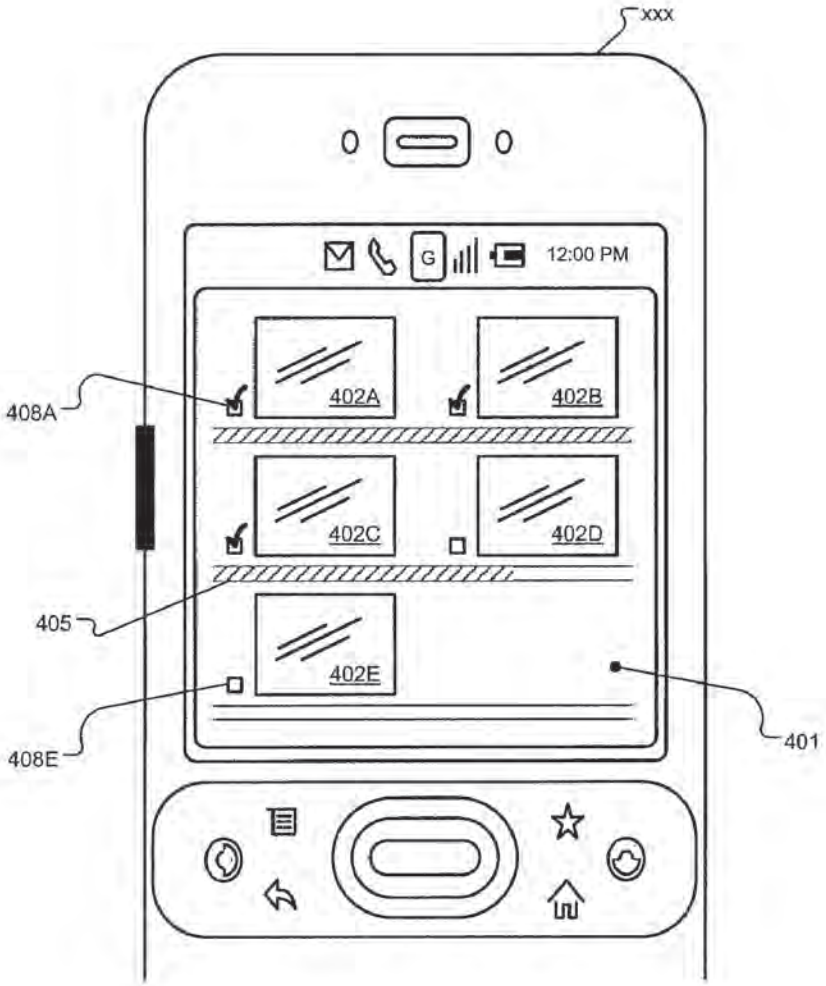


FIG. 4

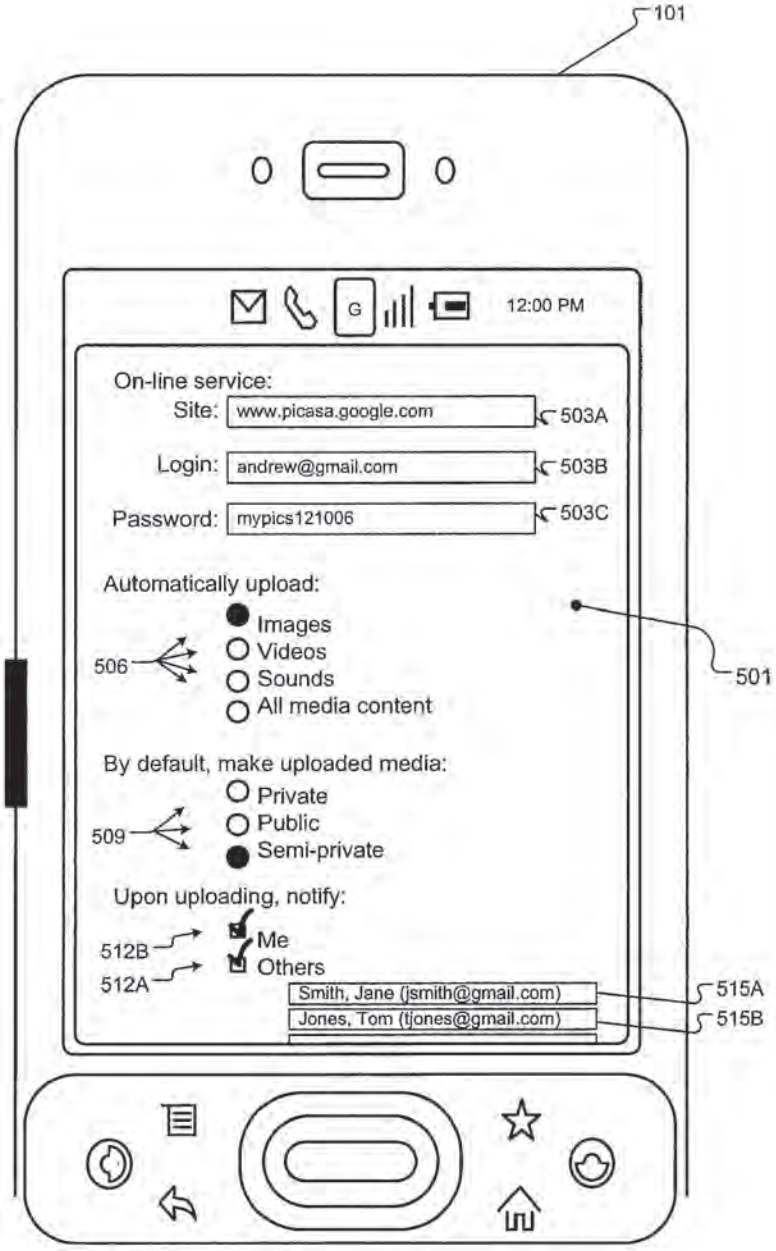
101
12:00 PM
On-line service:
Site: www.picasa.google.com
503A
Login: andrew@gmail.com
503B
Password: mypics121006
503C
Automatically upload:
Images
Videos
Sounds
All media content
506
501
By default, make uploaded media:
Private
Public
Semi-private
509
Upon uploading, notify:
Me
Others
512B
512A
Smith, Jane (jsmith@gmail.com)
Jones, Tom (tjones@gmail.com)
515A
515B

FIG. 5

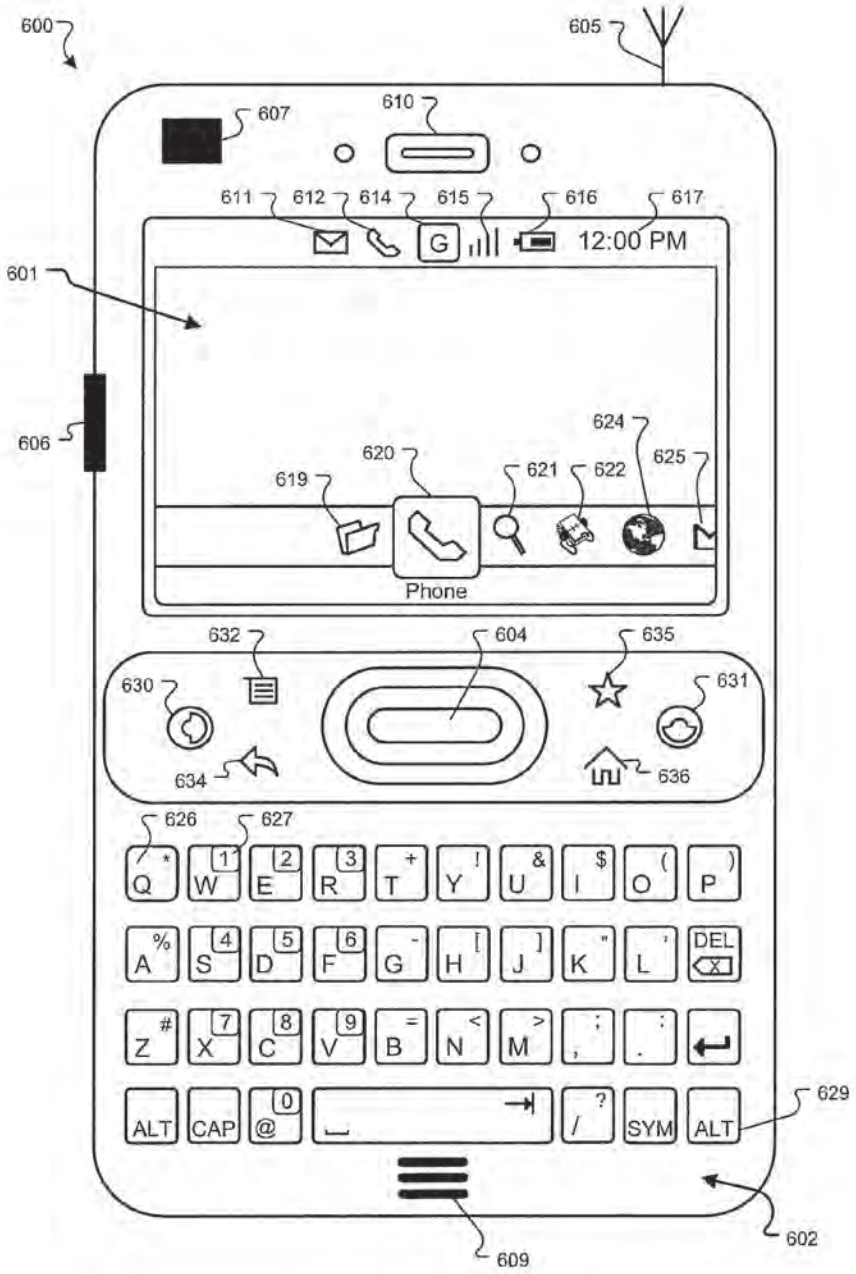
600
605
607
610
611
612
614
615
616
617
12:00 PM
601
606
624
620
625
619
621
622
Phone
632
604
635
630
631
634
636
626
627
629
602
609

FIG. 6

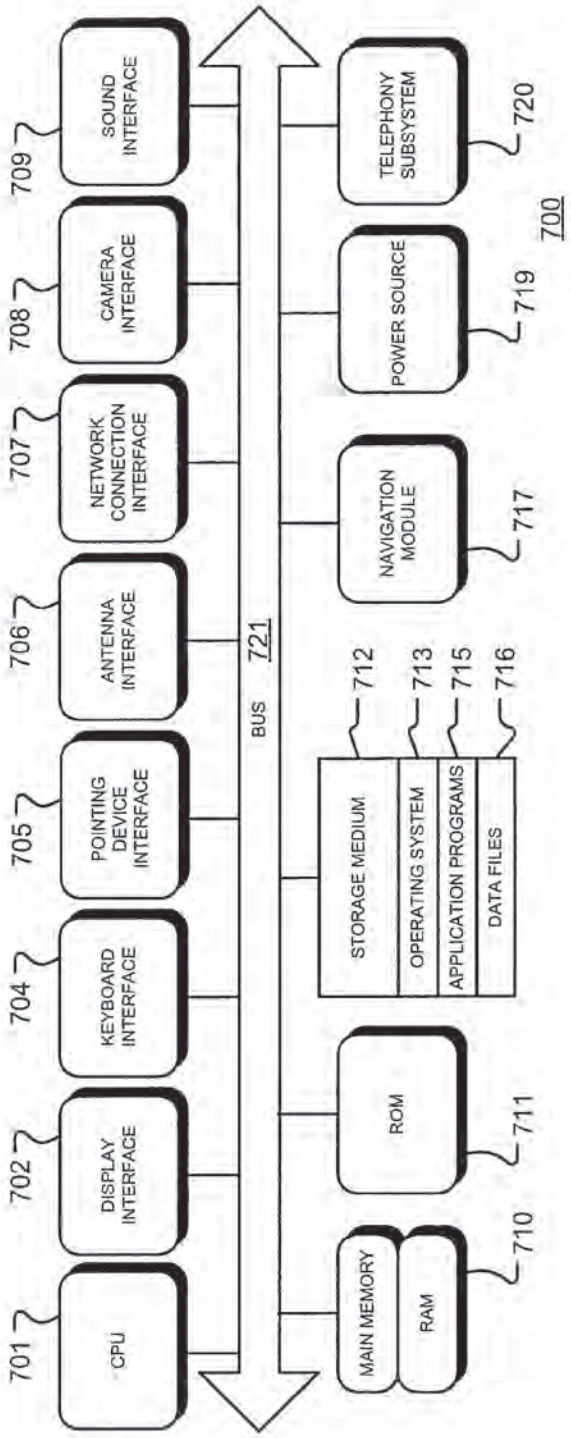
701
CPU
702
DISPLAY INTERFACE
704
KEYBOARD INTERFACE
705
POINTING DEVICE INTERFACE
706
ANTENNA INTERFACE
707
NETWORK CONNECTION INTERFACE
708
CAMERA INTERFACE
709
SOUND INTERFACE
BUS 721
MAIN MEMORY
RAM
710
ROM
711
STORAGE MEDIUM
712
OPERATING SYSTEM
713
APPLICATION PROGRAMS
715
DATA FILES
716
NAVIGATION MODULE
717
POWER SOURCE
719
TELEPHONY SUBSYSTEM
720
700

FIG. 7

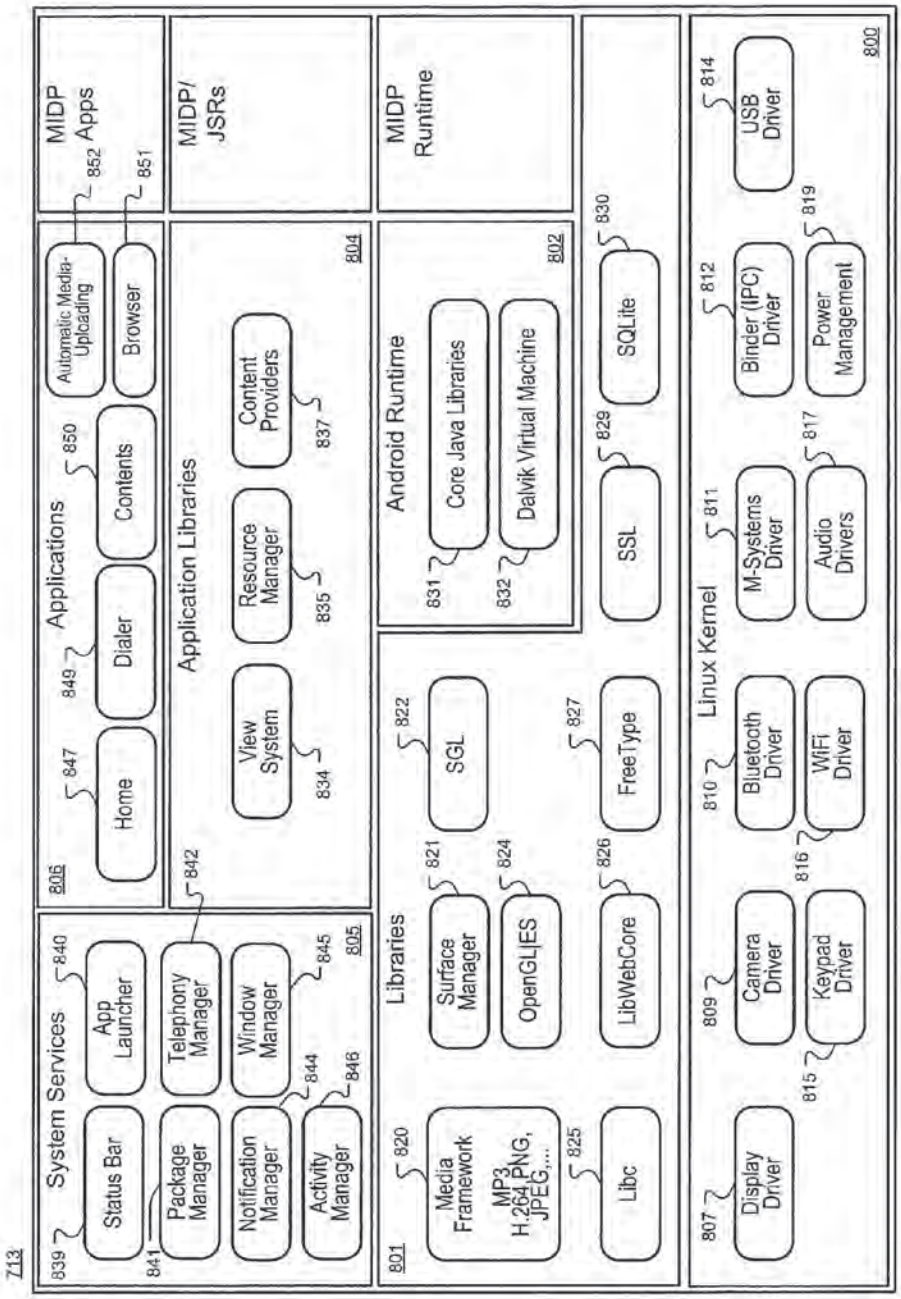
713
System Services
839
Status Bar
840
App Launcher
841
Package Manager
842
Telephony Manager
844
Notification Manager
845
Window Manager
846
Activity Manager
805
806
Applications
847
Home
849
Dialer
850
Contents
852
Automatic Media-Uploading
851
Browser
Application Libraries
804
View System
834
Resource Manager
835
Content Providers
837
MIDP Apps
MIDP/ JSRs
MIDP Runtime
Libraries
801
820
Media Framework
MP3
H.264,PNG,
JPEG,...
821
Surface Manager
822
SGL
824
OpenGL|ES
825
Libc
826
LibWebCore
827
FreeType
Android Runtime
802
831
Core Java Libraries
832
Dalvik Virtual Machine
829
SSL
830
SQLite
Linux Kernel
800
807
Display Driver
809
Camera Driver
810
Bluetooth Driver
811
M-Systems Driver
812
Binder (IPC) Driver
814
USB Driver
815
Keypad Driver
816
WiFi Driver
817
Audio Drivers
819
Power Management

FIG. 8

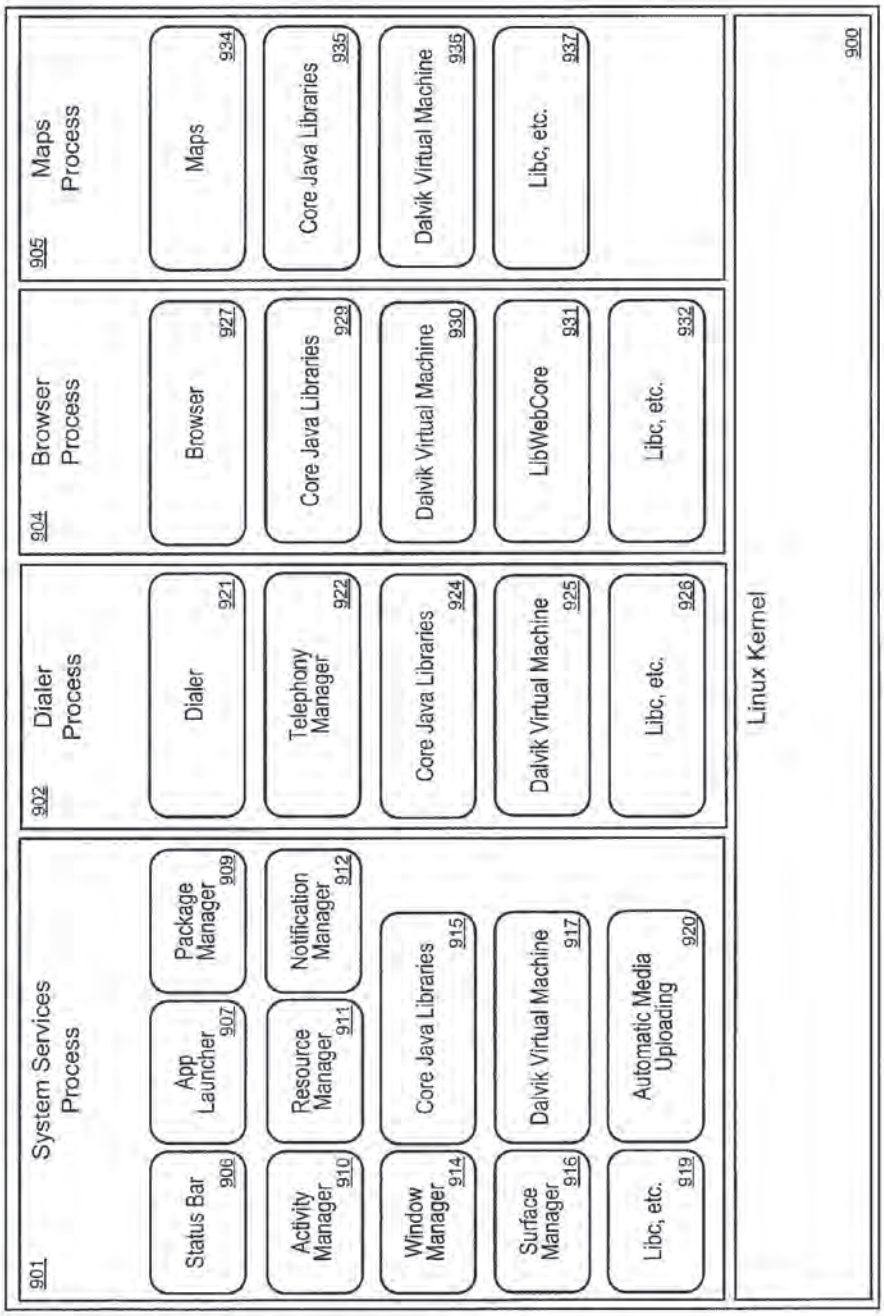
901
System Services Process
Status Bar 906
App Launcher 907
Package Manager 909
Activity Manager 910
Resource Manager 911
Notification Manager 912
Window Manager 914
Core Java Libraries 915
Surface Manager 916
Dalvik Virtual Machine 917
Libc, etc. 919
Automatic Media Uploading 920
902
Dialer Process
Dialer 921
Telephony Manager 922
Core Java Libraries 924
Dalvik Virtual Machine 925
Libc, etc. 926
904
Browser Process
Browser 927
Core Java Libraries 929
Dalvik Virtual Machine 930
LibWebCore 931
Libc, etc. 932
905
Maps Process
Maps 934
Core Java Libraries 935
Dalvik Virtual Machine 936
Libc, etc. 937
Linux Kernel
900

FIG. 9

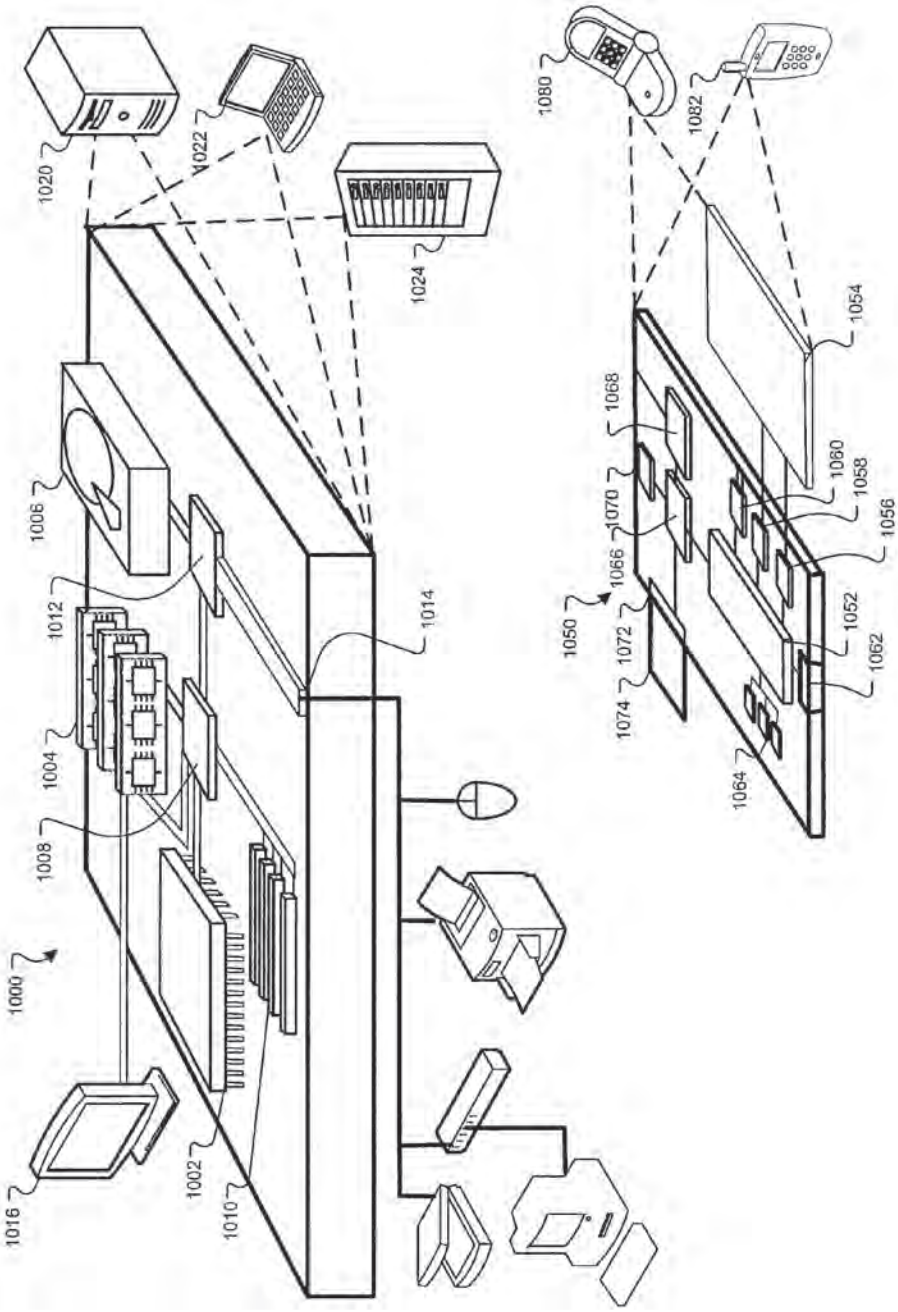
1000
1002
1004
1006
1008
1010
1012
1014
1016
1020
1022
1024
1050
1052
1054
1056
1058
1060
1062
1064
1066
1068
1070
1072
1074
1080
1082

FIG. 10

# CAPTURING AND AUTOMATICALLY UPLOADING MEDIA CONTENT

## TECHNICAL FIELD

This document relates generally to capturing and automatically uploading media content, and in particular, to automatically uploading media content captured by a mobile device to an online service provider.

## BACKGROUND

A mobile computing or communication device (e.g., a smartphone, cell phone, personal digital assistant (PDA), etc.) may include a camera that enables a user of the mobile computing or communication device to capture still or video images. Images that are captured by the mobile computing or communication device may be stored on the device, displayed by the device or transferred to external equipment for display or other processing.

External equipment may include various online service providers for sharing media content (e.g., image, audio or video content), such as image-, audio-, or video-sharing service providers (e.g., PICASA™, FLICKR™, PHOTOBUCKET, MYSPACE.COM, FACEBOOK, YOUTUBE, etc.). Users may open user accounts on such online service providers and subsequently use their accounts to store uploaded content and share that content with other designated users or with the general public. To organize uploaded content, online service providers may allow users to create folders and add information to the folders or to content within folders (e.g., keywords, categories, and other classification information for sorting or filtering content). To upload content to an online service provider, the user may employ, for example, a desktop computer and a small application to locate content on the desktop computer and upload it the online service provider (e.g., to the user's account maintained by the online service provider, or to a folder within the user's account). As another example, a user may manually email instances of media content to the online service provider.

## SUMMARY

This document describes methods and systems for capturing media content (e.g., image, audio or video content) from a device (e.g., a mobile device, such as a smartphone, cell phone, personal digital assistant (PDA), etc.), and automatically uploading it to an online service provider, such as a media content sharing service. In some implementations, the captured media content may be automatically uploaded to the online service provider without the device receiving contemporaneous user input that specifies that the captured media content is to be uploaded. That is, a user may initially configure his or her device by specifying an online service provider to which captured media content should be automatically uploaded, any necessary account information for the online service provider, and preference information regarding how and when captured media content should be uploaded. Subsequently, the user may capture media content using the device, and the device may automatically upload the captured media content according to the configuration information, without requiring further user action contemporaneous with the uploading.

In some implementations, a computer-implemented method for automatically uploading media content from a mobile device to an online service provider includes receiving, in a mobile device, identifying information corresponding to a user account associated with at least one of the plurality of online service providers. The mobile device can have a media input component configured to capture media content and a wireless communication component configured to wirelessly send data to and wirelessly receive data from a plurality of online service providers that are external to the mobile device. The computer-implemented method can further include capturing media content with the media input component, and after the media content is captured, automatically uploading to the at least one online service provider the captured media content and the identifying information. The media content can be automatically uploaded without the mobile device receiving user input that a) is contemporaneous with the automatic uploading or that b) specifies that the captured media content is to be uploaded to the at least one online service provider.



In some implementations, the mobile device is a smartphone and the media input device comprises at least one of a still-image camera, a video camera and a microphone. In some implementations, the mobile device is a wirelessly-equipped digital camera. In some implementations, the mobile device is a Global Positioning System (GPS)-equipped mobile device, and the captured media content comprises a plurality of GPS-mapped locations corresponding to a route over which the GPS-equipped mobile device traveled. The plurality of online service providers can include online image- and video-sharing service providers. The plurality of online service providers can include online audio-sharing service providers.

Identifying information can include a device identifier associated with the mobile device. Identifying information can include access-control information associated with the user account.

Automatically uploading the captured media content can include automatically uploading with the captured media content corresponding configuration information that causes the captured media content to be made available to the general public by the at least one online service provider. Automatically uploading the captured media content can include automatically uploading with the captured media content corresponding configuration information that causes the captured media content to be made available only to one or more other user accounts associated with one or more of the plurality of online service providers. Automatically uploading the captured media content can include automatically uploading media content that has not been deleted within a predetermined time of being captured. Automatically uploading the captured media content can include automatically uploading portions of the captured media content with the wireless communication component when the wireless communication component has available bandwidth over a channel coupling the mobile device and the at least one online service provider.

The computer-implemented method can further include causing a message to be sent to each of the one or more other user accounts when the captured media content has been automatically uploaded to the at least one online service provider. Causing a message to be sent can include automatically sending an electronic message from the mobile device to the one or more other user accounts. Causing a message to be sent can include providing a control signal to the at least one online service provider that causes the at least one online service provider to send an electronic message to the one or more other user accounts.

The computer-implemented method can further include automatically uploading to a second one of the plurality of online service providers the captured media content. The

second online service provider can be different than the at least one online service provider. Automatically uploading to the second online service provider can include automatically uploading without receiving user input that a) is contemporaneous to the automatic uploading to the second online service provider and b) that specifies that the captured media content is to be uploaded to the second online service provider.

Capturing media content can include storing geographical location information associated with the mobile device at a point in time when the media content is captured. Automatically uploading the captured media content can include uploading with the captured media content the stored geographical location information.

The computer-implemented method can further include providing status information in the mobile device that indicates a current status of the automatic uploading of the captured media content to the at least one online service provider.

In some implementations, a device for capturing and automatically uploading media content to an online service provider includes a communication component configured to send data to and receive data from a plurality of online service providers that are external to the device; a media content-capturing component; memory configured to store a) identifying information corresponding to a user account associated with at least one of the plurality of online service providers and b) captured media content that is acquired by the media content-capturing component; and an automatic upload management component configured to automatically upload to the at least one online service provider the captured media content and the identifying information, without receiving contemporaneous user input specifying that the captured media content is to be uploaded to the at least one online service provider. The device can further include a component that provides a function associated with a household appliance, the function selected from the group comprising heating or cooling food or beverage items, washing household items, or drying household items.

In some implementations, a device for capturing and automatically uploading media content to an online service provider includes a communication component configured to send data to and receive data from a plurality of online service providers that are external to the device; a media content-capturing component; memory configured to store a) identifying information corresponding to a user account associated with at least one of the plurality of online service providers and b) captured media content that is acquired by the media content-capturing device; and a means for automatically uploading to the at least one online service provider the captured media content and the identifying information, without receiving contemporaneous user input specifying that the captured media content is to be uploaded to the at least one online service provider.

The details of one or more implementations are set forth in the accompanying drawings and the description below.

## DESCRIPTION OF DRAWINGS

FIG. **1** is a block diagram of an example environment in which media content can be captured by a mobile device and automatically uploaded to an online service provider.

FIG. **2** is block diagram illustrating additional example details of the mobile device shown in FIG. **1**.

FIG. **3** is a flow diagram of an example method of capturing, and automatically uploading to an online service provider, media content

FIG. **4** is an example screenshot illustrating a graphical summary of progress of an automatic upload process of media from a mobile device to an online service provider.

FIG. **5** is a screenshot illustrating an example configuration tool for configuring how captured media content is to be automatically uploaded to an online service provider.

FIG. **6** is a schematic representation of an exemplary mobile device that can automatically upload media content to an online service provider.

FIG. **7** is a block diagram illustrating additional details of the internal architecture of the device of FIG. **6**.

FIG. **8** is a block diagram illustrating exemplary components of the operating system used by the device of FIG. **6**.

FIG. **9** is a block diagram illustrating exemplary processes implemented by the operating system of FIG. **8**.

FIG. **10** shows an example of a computer device and a mobile computer device that can be used to implement the techniques described here.

Like reference symbols in the various drawings indicate like elements.

## DETAILED DESCRIPTION

This document describes methods and systems for capturing media content (e.g., image, audio or video content) from a device (e.g., a mobile device, such as a smartphone, cell phone, personal digital assistant (PDA), etc.), and automatically uploading it to an online service provider, such as a media content sharing service. In some implementations, the captured media content may be automatically uploaded to the online service provider without the device receiving contemporaneous user input that specifies that the captured media content is to be uploaded. That is, a user may initially configure his or her device by specifying an online service provider to which captured media content should be automatically uploaded, any necessary account information for the online service provider, and preference information regarding how and when captured media content should be uploaded. Subsequently, the user may capture media content using the device, and the device may automatically upload the captured media content according to the configuration information, without requiring further user action contemporaneous with the uploading.

FIG. **1** is a block diagram of an example environment **100** in which media content can be captured by a mobile device **101** and automatically uploaded to an online service provider **104**. The mobile device **101** can be any mobile communication or computing device, such as a cell phone, personal digital assistant (PDA), media player, digital camera, digital audio recorder, navigational device, etc. Typically, such devices provide various computing resources that enable a user to interact with the device through input/output facilities, and in particular, to run applications that enable the user to process data or media in some manner. Many such devices include cameras and microphones for capturing various kinds of media content (e.g., audio content, still images, video images, etc.), and some devices may also provide communication facilities, such as voice, data and messaging services. The methods described herein can also be employed by other (non-mobile devices).

In one implementation as shown, the mobile device **101** can connect to a network **107**. The network **107** is shown as a single network, but the reader will appreciate that various networks can be included in the network **107**, such as, for example, a wireless communication network, the Public Switched Telephone Network (PSTN), the internet, and vari-

ous other networks (e.g., private networks that are connected to one of the above-mentioned networks).

Through the network, a user **102** of the mobile device **101** can communicate with users **110**A and **1108** of other respective mobile devices **113**A and **113**B. In particular, for example, users **102** and **110**A may communicate through a voice connection (e.g., a telephone call) facilitated by the network **107**, or a portion thereof. As another example, users **110**A and **1108** may communicate through text messages, such as electronic mail messages or short message service (SMS) messages that are routed through the network **107**, or a portion thereof.

In addition to facilitating communication between users, the network **107** enables the mobile device **101** to access content from content and service providers that are accessible from the network **107**. For example, a content provider **116** may provide news and other information to users who connect to the network using mobile devices (e.g., mobile devices **101**, **113**A or **113**B) or other computing devices, such as a computing device **119**. The content provider can represent any online content or service provider, such as, for example, CNN, MSNBC, ESPN or GOOGLE. As another example, a service provider **104** may facilitate online communication between many different users, or sharing of media content between users. The service provider **104** can represent any online content or service provider, such as, for example, PICASA™, FLICKR™, PHOTOBUCKET, MYSPACE.COM, or FACEBOOK, to name a few specific examples.

In some implementations, a user of the computing device **119** or the mobile device **101** can manually upload media content to the online service provider **104** (in particular, to storage space associated with an account corresponding to the user). For example, a user of the computing device **119** may store digital pictures on the computing device **119**. At some point, the user may desire to upload a portion of the digital pictures to the online service provider **104** (i.e., to storage space **121** associated with the user)—for example, to organize the portion of pictures into albums and share the albums with other specific users who have corresponding accounts on the content provider, or to share the portion of pictures with the general public. In order the upload the portion of pictures, the user may employ an upload tool provided by the online service provider **104** (e.g., an upload application that allows the user to view various digital pictures that are stored on the computing device and individually select pictures for uploading to the service provider).

As another example, a user **102** of the mobile device **101** may take a picture or video using a camera included in the mobile device **101**, then subsequently transmit the picture or video to the online service provider **104** (i.e., to an account associated with the user **102**, which is depicted by storage space **122**, and hereafter referred to as account **122**). In particular, for example, the user **102** may email the picture to a specialized inbox maintained by the online service provider **104** for receiving media content.

In some implementations, the process of uploading media content to the online service provider **104** is automated. For example, the user **102** may initially configure the mobile device **101** to identify the online service provider **104**, as well as to store, and provide when uploading media content, corresponding account information (e.g., a username and password) for the account **122** that is maintained by the online service provider **104** that corresponds to the user **102**. The user **102** may also configure the mobile device **101** with various preferences for uploading media content to the online service provider **104** (e.g., preferences related to types of media content to automatically upload; whether uploaded content is to be made available to the general public, to specific other users or to be maintained as private; whether to send a notification message to any other users once content is uploaded, etc.). Once configured, the mobile device **101** may automatically upload content that is subsequently captured by the mobile device **101**.

An example process by which media content can be automatically uploaded to the online service provider **104** is now described in more detail. In this example, the user **102** of the mobile device **101** has previously configured the mobile device **101** to automatically upload digital photos to the account **122**, which is maintained by the online service provider **104** (e.g., PICASA™). In the example process, the user **102** employs the mobile device **101** to capture a digital image of a scene **125**, using a camera that is included in the mobile device **101**. Once a digital image **128** of the scene is captured, the digital image **128** can be automatically uploaded to the online service provider **104**. In particular, the digital image **128** can be transmitted to the online service provider **104** via the network **107** (e.g., a wireless communication network and the internet), and in particular, to the user's account **122** (e.g., via paths A, B, C and D).

Identifying information corresponding to the user **102** can also transmitted to the online service provider **104**, along with the digital image **128**. In some implementations, the identifying information is an account name or number and corresponding login information (e.g., access-control information, such as an account number or username and corresponding password). In other implementations, the identifying information is a device identifier associated with the mobile device **101**. For example, during an initial configuration process, the device identifier associated with the mobile device (e.g., a device serial number or other device-specific identifying information) may be associated with the account **122** of the user **102**, such that the account **122** can be subsequently accessed using the device identifier. The reader will appreciate that various other kinds of identifying information can be employed, and that in general, any way of securely and uniquely identifying an account can be employed.

The above example may be understood in the context of a packet-switched transmission, in which the digital image **128** is transmitted to the online service provider **104** in one or more packets of information that are individually routed over the network **107** to the online service provider **104**. For example, packets carrying portions of the digital image **128** may be transmitted to the online service provider **104** whenever bandwidth is available (e.g., when other wireless functionality of the mobile device **101** is not in use). In some implementations, packets can be transmitted in the background, while other application(s) on the mobile device **101** are in use.

The above example may also be understood in the context of a circuit switched connection between the mobile device **101** and the online service provider **104**. For example, the mobile device **101** may open a connection (e.g., a circuit) to the online service provider **104** when the mobile device **101** detects that a camera component (or other media capturing component) has been activated. As part of opening the connection, the mobile device **101** may transmit account identifying information that specifies a destination for subsequently captured media content (e.g., account **122**). As media content is captured, the mobile device **101** may then transmit it, over the open connection, to the online service provider **104**.

In some implementations, the user **102** may have already captured some media content with the mobile device **101** and stored that media content in the mobile device **101** before



LifeScan, Inc. Ex. 1018
Page 14 of 26
IPR2025-00102

configuring the mobile device **101** to automatically upload media content. In such implementations, previously stored media content may also be automatically uploaded. For example, after receiving configuration information to automatically upload captured media content, the mobile device **101** may search its memory, identify media content that is currently stored therein and that has not already been uploaded, and upload the stored media content in the manner described above. Further details of such scenarios are provided with reference to FIG. **4**.

Some level of filtering may be applied before media content is automatically uploaded. For example, in some implementations, there is a delay between the media content being captured, and the captured media content being automatically uploaded. Such implementations can account for media content being captured in the mobile device **102** and then being discarded. In particular, for example, if the user **102** of the mobile device **101** captures ten digital images within a short period of time, then deletes six of the captured images shortly after capturing them, only the four digital images that are not deleted may be uploaded. In some implementations, filtering may include identifying certain types of media content to automatically upload. For example, the mobile device **101** may be configured to automatically upload digital images and digital video captured by the mobile device, but not digital audio that is captured by the mobile device.

In some implementations, contents of the mobile device **101** and contents of the corresponding user's account **122** are synchronized. For instance, with reference to the above example in which ten digital images are captured, if the six digital images are deleted after the ten digital images are captured and uploaded (e.g., a day or two later, a week later, etc.), the mobile device **101** may automatically send a command to the online service provider **104** to cause the six images that were deleted on the mobile device **101** to also be deleted from the account **122**.

In addition to transmitting to the online service provider **104** media content itself and any identifying information necessary to store the media content in storage associated with a particular user account (e.g., account **122**), the mobile device **101** can also transmit to the online service provider information that specifies how the transmitted media content is to be treated—in particular, whether the transmitted media content is to be treated as private content that is available to only the user who captured the content, whether the transmitted media content is to be treated as public (e.g., and made available to the general public by the online service provider **104**), whether the transmitted media content is to be treated as semi-public (e.g., and made available to certain other users, such as certain identified users also having accounts with the online service provider).

In some implementations, certain other users are notified when media content is uploaded that meets one or more criteria. One criterion may be that the media that is not identified as private. Another criterion may be that the media is video media having a length within some threshold range (e.g., between 15 and 200 seconds) or a size within some threshold range (e.g., video media that is between 500 kilobytes and 2 megabytes). Another criterion may be that the media is image content having certain metadata (e.g., a captured-date within one week of being uploaded), media that is tagged with particular geo-location information (e.g., GPS coordinates, other geo-coordinates, or more general geographical information, such as "Mt. Rainier"). Any other criteria may be employed to assist a user in filtering uploaded media content about which others are notified. Similarly, any criteria may be employed by other users who subscribe to media content to filter notifications to include only notifications about uploaded content for which the others users may have an interest in obtaining.

To further illustrate, some online services facilitate the creation of social networks (e.g., a network of users, where a first user, such as the user **102**, and a second user may be linked by being identified as friends); in such scenarios, users within a social network (e.g., friends who are linked to each other within some degree (e.g., direct, mutually linked friends (first degree); friends of friends (second-degree connection), friends of friends of friends (third degree connection), etc.) may be notified each time a user's media content is uploaded (or each a time a user's media that meets appropriate criteria is uploaded). In particular, for example, the online service provider may be configured to send an SMS or email message to other users in the social network whenever media content is uploaded for the user **102**.

As another notification example, some online services facilitate subscriptions, whereby users can sign up to receive (subscribe to) notifications of new content available from other users, or to receive the content itself (e.g., via email or in a special message box provided the online service provider). In such scenarios, users who have subscribed to content available from the user **102** can receive an SMS or email message whenever media content from the user **102** is uploaded.

In the above examples in which other users are notified when a user's media content is uploaded from the mobile device **101**, messages to the other users may, in some implementations, come from the online service provider **104**. For purposes of this example, the other users can include the users **110**A and **1108**. In particular, for example, the online service provider may send SMS messages (or other types of messages) to the users **110**A and **1108** (via paths E, F and $G_1$ and $G_2$) based on configuration information associated with the user account **122** (e.g., configuration information identifying users **110**A and **1108** as friends of the user **102**, or other users who have subscribed to content of the user **102**). Alternatively, if the users **110**A and **1108** also have accounts with the online service provider **104**, messages may be placed in a message area (e.g., an inbox) associated with those users' accounts. The messages may include a link to the new content to enable the users **110**A and **1108** to efficiently access that new content.

In other implementations, the users **110**A and **1108** may be directly notified of new media content by the mobile device **101** rather than by the online service provider **104**. That is, as (or after) new media content is automatically uploaded from the mobile device **101** to the online service provider **104**, the mobile device **101** may automatically send SMS messages (or other types of messages) to the users **110**A and **1108** alerting them that new content is available from the user **102**.

In order to ensure that the content is actually available from the online service provider, there may be some delay between the time the content is uploaded from the mobile device **101** and the time the messages are sent to the users **110**A and **1108**. In particular, for example, the mobile device **101** may be configured to wait a predetermined period of time (e.g., 30 seconds, one minute, ten minutes, four hours, etc.) after uploading new media content before notifying the users **110**A and **1108**; alternatively, the mobile device **101** may receive a confirmation message from the online service provider **104** once the media content has been successfully received, and the mobile device **101** may wait until receiving the confirmation message before notifying the users **110**A and **1108** of the new content. In some implementations, a confirmation message includes a direct link to the newly uploaded content, and



LifeScan, Inc. Ex. 1018
Page 15 of 26
IPR2025-00102

the mobile device **101** may provide the direct link in notification messages to the users **110**A and **1108** to enable the users to quickly navigate to the new content.

FIG. **2** is block diagram illustrating additional example details of the mobile device **101** shown in FIG. **1**. Other details of mobile devices that can implement the methods described herein are illustrated in and described with reference to FIGS. **6-10**.

As depicted in one implementation in FIG. **2**, the mobile device **101** includes a display screen **204** (and possibly other output devices, which are not shown), input devices **207** (e.g., buttons, a hard keyboard, a soft keyboard (such as an image of a keyboard on a touch-sensitive screen, etc.), and applications **210** (e.g., programming code stored in memory that can be executed by a processor to receive input from the input devices **207**, process the input and present corresponding output in the display screen **204** or through other output devices).

A display module **213** can include programming code and hardware necessary to receive information from the applications **210** and from other sources, transform the information into a format that is suitable for controlling the display screen (e.g., a pixel format that specifies data for each pixel in the display screen including, for example, a row and column address, a color for the pixel, and an intensity for the pixel), and provide the transformed information to the display screen **204** (or more particularly, a hardware interface that controls the display screen, in some implementations).

Other types of input devices can also be included, such as media-capturing devices that can include a camera component **216**, a microphone component **219**; and a location-pinpointing component **222**. The camera component **216** can be a still-image or video-image capturing device for capturing image data. The microphone component **219** can be a microphone element for capturing audio data.

The location-pinpointing component **222** can be a component configured to identify a current location of the mobile device **101**. For example, in some implementations, the location-pinpointing component **222** is a Global Positioning System (GPS) component that can capture current latitude and longitude information and, optionally, altitude information of the mobile device **101** (e.g., using signals from multiple GPS satellites). As another example, the location-pinpointing component can be a component that captures location information in another manner, such as a component that receives triangulation-based information from a corresponding wireless network, or a component that directly determines a location relative to nearby wireless towers, based on signals that are transmitted from those towers (e.g., using triangulation or other suitable techniques). The location-pinpointing component **222** can employ other methods of determining a current location of the mobile device—some of which are described in more detail below with reference to FIG. **7**.

Some applications can provide messaging functionality (e.g., SMS or email applications). In order for such applications to exchange messages with external devices, through an external network, the mobile device **101** can include a wireless communication component **225**. Wireless communication functionality is described in greater detail below—for example, with reference to FIGS. **6** and **7**.

As depicted in one implementation, the mobile device **101** includes data storage component **231** (e.g., memory) that can provide storage for various application data. In particular, in the context of capturing and uploading media content, the mobile device **101** can include storage **231** for storing account information **234** associated with a user account maintained by an online service provider (e.g., the user account **122** maintained by the online service provider **104** for the user **102**—shown in FIG. **1**). In addition, media content can be saved in the storage **231** after being captured (e.g., an audio file, depicted, for example, by element **237**; a video file, depicted, for example, by element **240**; and still-image file, depicted, for example, by element **243**).

As described in greater detail with reference to FIG. **3**, a user of the mobile device **101** can capture media content using the camera component **216** or the microphone component **219**; captured media content can be stored in the data storage component **231** (e.g., as a video file **240**, an image file **243** or an audio file **237**); and an application (e.g., one of the applications **210**) can automatically upload the stored media content and account information **234** to an online service provider, using the wireless communication component **225**.

Two example media capturing components **216** and **219** are shown in FIG. **2**, but the reader will appreciate that the mobile device **101** can include various other media-capturing components for capturing other kinds of media. For example a GPS receiver (or another type of receiver capable of capturing geographical information corresponding to a current location of the mobile device **101**) can capture route information (e.g., a route including a series of geographical locations over which the mobile device **101** traverses). In some implementations, partial route information is periodically uploaded as the route is traversed; in other implementations, data for an entire route can be automatically uploaded when a user indicates that the route is complete (e.g., by providing input to a route-capturing application). As other examples, other media-capturing components can capture other kinds of media, such as, for example, audio content, video content, acceleration or vibration content, temperature content, humidity content, barometric pressure content (or other weather condition-related content), content that includes non-visible portions of the electromagnetic spectrum (e.g., x-rays, infrared, ultra high frequency content, etc.), and other kinds of content that can be captured by an input device included in the mobile device **101** and stored electronically. Moreover, multimedia content can also be captured and automatically uploaded.

FIG. **3** is a flow diagram of an example method **301** of capturing, and automatically uploading to an online service provider, media content. The method **301** can be carried out, for example, by the mobile device **101** shown in FIGS. **1** and **2**. As shown, the method **301** can include receiving (**302**) identifying information corresponding to a user account associated with an online service provider. For example, with reference to FIG. **1**, the mobile device **101** can receive input from the user **102** that identifies the account **122** (e.g., the account information **234** shown in FIG. **2**). In particular, the account-identifying information can include an identifier for the appropriate online service provider (e.g., PICASA™), as well as, for example, login and password information to enable the user **102** to access the account (e.g., in subsequent transactions, such as subsequent uploads of media content). In some implementations, the mobile device **101** receives (**302**) this information in a configuration interface, such as that shown in FIG. **4**.

The method **301** can also include capturing (**305**) media content. For example, with reference to FIGS. **1** and **2**, the user **102** can employ the mobile device **101** to capture a digital image of the scene **125**. In particular, the user **102** can employ a camera component (e.g., camera component **216**, shown in FIG. **2**, and a corresponding image-capturing application included in the applications **210**) to capture the digital image. Upon capturing the digital image, the mobile device **101** may store the digital image in memory included in the mobile

device (e.g., the digital image may be stored as the file **240**, in a data storage area of memory, depicted as element **231**).

The method **301** includes automatically uploading (**308**) to the online service provider the captured media content without receiving contemporaneous user input to upload the captured media content. In this context, contemporaneous input can include input that is received shortly before (e.g., a second before, several seconds before, one or more minutes before) the media content is uploaded. In contrast, automatically uploading media content without receiving contemporaneous user input to upload the captured media content can include, for example, automatically uploading media content based on configuration information that was received (**302**) five minutes before the media content is automatically uploaded, 30 minutes before the media content is automatically uploaded, two days before the media content is uploaded, six months before the media content is automatically uploaded, etc. That is, the media content can be uploaded in response to configuration information that was previously received (**302**) by the mobile device, but specific instances of media can be automatically uploaded based on general configuration settings, rather than in response to direct, contemporaneous user input that is particular to the specific instances of media.

To further illustrate with continued reference to FIGS. **1** and **2**, after the user **102** has captured the digital image of the scene **125** (e.g., the electronic file depicted as element **240**), one of the applications **210** can cause captured media content (e.g., the file **240**) and account-identifying information (e.g., account information **234**) to be transmitted by the wireless communication component **225**. In particular, the wireless communication component **225** can cause the captured media content and the account-identifying information **234** to be transmitted to the online service provider **104** (e.g., via the network **107**, along paths A, B, C and D).

In some implementations, other information associated with the captured content can also be transmitted to the online service provider **104**. For example, as described above, configuration preferences regarding how the captured media is to be treated (e.g., as publicly available media, as private media, as semi-private media, etc.) can also be transmitted with the captured media. As another example, some implementations may also include geographical information associated with the captured media. In particular, the location-pinpointing component **222**, shown in FIG. **2**, can capture location information of the mobile device **101** any time media content is captured. Such location information can be stored with the captured media content and transmitted to the online service provider with the content itself (e.g., to enable the media content to be geotagged or geocoded). Other metadata or information can also be provided with the media content (e.g., a size of the media content, a resolution, a file format, a timestamp corresponding to when the media content was captured, etc.).

In some implementations, as described above, messages (e.g., SMS or email messages) may be sent to various other users alerting the other users that new media content from the user **102** has been uploaded. The messages could be sent from the mobile device **101** or from the online service provider **104**. In addition, a confirmation message may be sent from the online service provider to the mobile device **101** to alert the user **102** that media content has been successfully uploaded.

FIG. **4** is an example screenshot illustrating a graphical summary **401** of progress of an automatic upload process of media from the mobile device **101** to an online service provider. For purposes of example, the example media content is depicted as including five digital images, but the graphical summary **401** can provide status information for any other kind of media.

As shown in one implementation, the graphical summary **401** can include a thumbnail for each digital image that is being automatically uploaded (e.g., thumbnails **402**A, **402**B, **402**C, **402**D and **402**E). The graphical summary **401** can include a progress bar **405** that may be filled in as media content is uploaded. A checkbox can also be displayed next to each thumbnail, and the checkbox can be either checked (e.g., as checkbox **405**A is) or unchecked (as checkbox **405**E is)—for example, depending on whether the corresponding media (e.g., digital image) has been fully uploaded to the appropriate online service provider.

The graphical summary **401** can provide status to the user which may be useful when the media content is large (in which case, some time and network bandwidth may be required to upload the media content). In addition, when multiple different media files are uploaded, the graphical summary **401** can provide the user with status information regarding specific media files. For example, as depicted in FIG. **4**, the graphical summary may indicate to a user that media file **402**A has been fully uploaded, media file **402**D is currently being uploaded, and medial file **402**E has not yet been uploaded.

The information in the graphical summary **401** may serve as confirmation to a user that his or her content has been uploaded, or the information may enable the user to take other actions. For example, a user may wish to directly notify certain friends by email once specific media content has been uploaded, and the graphical summary **401** may provide confirmation information to which the user can refer in order to know when to send the email. This feature may be particularly advantageous, for example, when the user desires to notify other people that specific content has been uploaded when the other people are not configured to be automatically notified (e.g., by the mobile device or by the online service provider with an SMS message).

The graphical summary **401** may be useful in other situations as well. For example, if the user has captured media content before configuring his or her mobile device **101** to automatically upload media content to an online service provider when it is captured, an automatic upload application may give the user an option to manually select already captured media content to initially upload to the online service provider from an interface such as the graphical summary **401**. In such implementations, the user may employ the illustrated checkboxes (e.g., checkboxes **408**A and **408**E) to indicate which already captured media content should be initially uploaded.

The graphical summary **401** is merely exemplary, and the reader will appreciate that various other graphical or textual status information may be provided for various purposes, such as controlling the upload process or providing status regarding the same. For example, a column could be added to screens that provide information about files stored in the mobile device **101** (e.g., file browser screens), and each row corresponding to a file that has been uploaded to the online service provider could include an icon or special text (e.g., a check mark or some other indicator). Other formats and status information is contemplated.

FIG. **5** is a screenshot illustrating an example configuration tool **501** for configuring how captured media content is to be automatically uploaded to an online service provider. As depicted in one implementation, the configuration tool **501** can enable a user to specify an online service provider (e.g., the online service provider **104** that is shown in FIG. **1**), as



LifeScan, Inc. Ex. 1018
Page 17 of 26
IPR2025-00102

well as a corresponding login or username and password (e.g., by providing respective data entry fields **503**A, **503**B, and **503**C). In addition, the configuration tool **501** can enable a user to specify types of media content that should be automatically uploaded (e.g., images, video or sounds, to name a few examples) by providing radio buttons **506**, and to configure whether uploaded content should be classified as private, public or semi-private (e.g., made accessible to a select group of users) by providing radio buttons **509**.

For semi-private or private content, the configuration tool **501** can also enable the user to configure whether a message should be sent to certain other users (e.g., designated friends of the user who have access to semi-private content, users who have subscribed to public content, etc.) by providing a checkbox **512**A, and can further enable the user to identify the certain other users (e.g., with data entry fields **515**A and **515**B in which the other users' content information, such as email addresses, can be included). Another checkbox **512**B may be provided to configure whether a confirmation message should be sent back to the user once media content has been successfully received by the online service provider.

The configuration tool **501** shown in FIG. **5** is merely exemplary. For purposes of example, various checkboxes, radio buttons, and data entry fields are shown, but any suitable means for gathering relevant user input can be employed. In addition, other information can be gathered, which the mobile device can use in determining whether and how to automatically upload media content, and whether to notify certain users once the media content has been uploaded. For example, in some implementations, a user-specified time period may be entered, specifying how long the mobile device **101** should wait before automatically uploading media content. If media content is captured and deleted within the user-specified time period of being captured, the media content may not be uploaded. Such a feature may be advantageous, for example, to users who frequently take multiple digital pictures, then delete several of the pictures and save only those that turn out best. In such scenarios, the user may not want the subsequently deleted pictures to be uploaded, and a user-specified delay period may ensure that the undesired pictures are not uploaded. Various other kinds of configuration information are contemplated. As another example, the configuration tool can be configured to query the user about whether to upload any available geographical information associated with the media content (e.g., with an "Include geo-information" checkbox).

Information gathered in a configuration tool such as the one **501** shown in FIG. **5** can be used to provide default handling settings for media content. In some implementations, the default handling settings can be overridden on a media or media instance-specific basis. For example, the mobile device **501** may display a text box (not shown in the figures) requesting user confirmation of whether to apply or override default handling information on a media-specific basis (e.g., anytime video content is captured). As another example, a screen such as the summary screen **401** shown in FIG. **4** may enable a user to specifically confirm that certain media content instances should be uploaded according to the default handling information.

Referring now to FIG. **6**, the exterior appearance of an exemplary device **600** that facilitates automatic uploading of media content is illustrated. Briefly, and among other things, the device **600** includes a processor configured to provide interactive indicators, which can reveal progressively more information about an alert message, in response to user interaction with the corresponding interactive indicator.

In more detail, the hardware environment of the device **600** includes a display **601** for displaying text, images, and video to a user; a keyboard **602** for entering text data and user commands into the device **600**; a pointing device **604** for pointing, selecting, and adjusting objects displayed on the display **601**; an antenna **605**; a network connection **606**; a camera **607** (which can be employed to capture digital image or video media that can be automatically uploaded to an online service provider); a microphone **609** (which can be employed to capture audio media that can be automatically uploaded to an online service provider); and a speaker **610**. Although the device **600** shows an external antenna, the device **600** can include an internal antenna, which is not visible to the user.

The display **601** can display video, graphics, images, and text that make up the user interface for the software applications used by the device **600**, and the operating system programs used to operate the device **600**. Possible elements that may be displayed on the display **601** include, for example, a new mail indicator **611** that alerts a user to the presence of a new message; an active call indicator **612** that indicates that a telephone call is being received, placed, or is occurring; a data standard indicator **614** that indicates the data standard currently being used by the device **600** to transmit and receive data; a signal strength indicator **615** that indicates a measurement of the strength of a signal received by via the antenna **605**, such as by using signal strength bars; a battery life indicator **616** that indicates a measurement of the remaining battery life; or a clock **617** that outputs the current time.

The display **601** may also show application icons representing various applications available to the user, such as a web browser application icon **619**, a phone application icon **620**, a search application icon **621**, a contacts application icon **622**, a mapping application icon **624**, an email application icon **625**, or other application icons. In one example implementation, the display **601** is a quarter video graphics array (QVGA) thin film transistor (TFT) liquid crystal display (LCD), capable of 16-bit color or better.

A user uses the keyboard (or "keypad") **602** to enter commands and data to operate and control the operating system and applications. The keyboard **602** includes standard keyboard buttons or keys associated with alphanumeric characters, such as keys **626** and **627** that are associated with the alphanumeric characters "Q" and "W" when selected alone, or are associated with the characters "*" and "1" when pressed in combination with key **629**. A single key may also be associated with special characters or functions, including unlabeled functions, based upon the state of the operating system or applications invoked by the operating system. For example, when an application calls for the input of a numeric character, a selection of the key **627** alone may cause a "1" to be input.

In addition to keys traditionally associated with an alphanumeric keypad, the keyboard **602** also includes other special function keys, such as an establish-call key **630** that causes a received call to be answered or a new call to be originated; a terminate call key **631** that causes the termination of an active call; a drop down menu key **632** that causes a menu to appear within the display **601**; a backwards navigation key **634** that causes a previously accessed network address to be accessed again; a favorites key **635** that causes an active web page to be placed in a bookmarks folder of favorite sites, or causes a bookmarks folder to appear; a home page key **636** that causes an application invoked on the device **600** to navigate to a predetermined network address; or other keys that provide for multiple-way navigation, application selection, and power and volume control.



LifeScan, Inc. Ex. 1018
Page 18 of 26
IPR2025-00102

The user uses the pointing device **604** to select and adjust graphics and text objects displayed on the display **601** as part of the interaction with and control of the device **600** and the applications invoked on the device **600**. The pointing device **604** is any appropriate type of pointing device, and may be a joystick, a trackball, a touch-pad, a camera, a voice input device, a touch screen device implemented in combination with the display **601**, or any other input device.

The antenna **605**, which can be an external antenna or an internal antenna, is a directional or omni-directional antenna used for the transmission and reception of radiofrequency (RF) signals that implement point-to-point radio communication, wireless local area network (LAN) communication, or location determination. The antenna **605** may facilitate point-to-point radio communication using the Specialized Mobile Radio (SMR), cellular, or Personal Communication Service (PCS) frequency bands, and may implement the transmission of data using any number or data standards. For example, the antenna **605** may allow data to be transmitted between the device **600** and a base station using technologies such as Wireless Broadband (WiBro), Worldwide Interoperability for Microwave ACCess (WiMAX), 3GPP Long Term Evolution (LTE), Ultra Mobile Broadband (UMB), High Performance Radio Metropolitan Network (HIPERMAN), iBurst or High Capacity Spatial Division Multiple Access (HC-SDMA), High Speed OFDM Packet Access (HSOPA), High-Speed Packet Access (HSPA), HSPA Evolution, HSPA+, High Speed Upload Packet Access (HSUPA), High Speed Downlink Packet Access (HSDPA), Generic Access Network (GAN), Time Division-Synchronous Code Division Multiple Access (TD-SCDMA), Evolution-Data Optimized (or Evolution-Data Only) (EVDO), Time Division-Code Division Multiple Access (TD-CDMA), Freedom Of Mobile Media Access (FOMA), Universal Mobile Telecommunications System (UMTS), Wideband Code Division Multiple Access (W-CDMA), Enhanced Data rates for GSM Evolution (EDGE), Enhanced GPRS (EGPRS), Code Division Multiple Access-2000 (CDMA2000), Wideband Integrated Dispatch Enhanced Network (WiDEN), High-Speed Circuit-Switched Data (HSCSD), General Packet Radio Service (GPRS), Personal Handy-Phone System (PHS), Circuit Switched Data (CSD), Personal Digital Cellular (PDC), CDMAone, Digital Advanced Mobile Phone System (D-AMPS), Integrated Digital Enhanced Network (IDEN), Global System for Mobile communications (GSM), DataTAC, Mobitex, Cellular Digital Packet Data (CDPD), Hicap, Advanced Mobile Phone System (AMPS), Nordic Mobile Phone (NMP), Autoradiopuhelin (ARP), Autotel or Public Automated Land Mobile (PALM), Mobiltelefonisystem D (MTD), Offentlig Landmobil Telefoni (OLT), Advanced Mobile Telephone System (AMTS), Improved Mobile Telephone Service (IMTS), Mobile Telephone System (MTS), Push-To-Talk (PTT), or other technologies. Communication via W-CDMA, HSUPA, GSM, GPRS, and EDGE networks may occur, for example, using a QUALCOMM MSM7200A chipset with an QUALCOMM RTR6285™ transceiver and PM7540™ power management circuit.

The wireless or wired computer network connection **606** may be a modem connection, a local-area network (LAN) connection including the Ethernet, or a broadband wide-area network (WAN) connection such as a digital subscriber line (DSL), cable high-speed internet connection, dial-up connection, T-1 line, T-3 line, fiber optic connection, or satellite connection. The network connection **606** may connect to a LAN network, a corporate or government WAN network, the Internet, a telephone network, or other network. The network connection **606** uses a wired or wireless connector. Example wireless connectors include, for example, an INFRARED DATA ASSOCIATION (IrDA) wireless connector, a Wi-Fi wireless connector, an optical wireless connector, an INSTITUTE OF ELECTRICAL AND ELECTRONICS ENGINEERS (IEEE) Standard 802.11 wireless connector, a BLUETOOTH wireless connector (such as a BLUETOOTH version 1.2 or 3.0 connector), a near field communications (NFC) connector, an orthogonal frequency division multiplexing (OFDM) ultra wide band (UWB) wireless connector, a time-modulated ultra wide band (TM-UWB) wireless connector, or other wireless connector. Example wired connectors include, for example, a IEEE-1394 FIREWIRE connector, a Universal Serial Bus (USB) connector (including a mini-B USB interface connector), a serial port connector, a parallel port connector, or other wired connector. In another implementation, the functions of the network connection **606** and the antenna **605** are integrated into a single component.

The camera **607** allows the device **600** to capture digital images, and may be a scanner, a digital still camera, a digital video camera, other digital input device. In one example implementation, the camera **607** is a 3 mega-pixel (MP) camera that utilizes a complementary metal-oxide semiconductor (CMOS). As indicated above, some media content captured by the camera **607** can be automatically uploaded to an online service provider, as described herein.

The microphone **609** allows the device **600** to capture sound, and may be an omni-directional microphone, a unidirectional microphone, a bi-directional microphone, a shotgun microphone, or other type of apparatus that converts sound to an electrical signal. The microphone **609** may be used to capture sound generated by a user, for example when the user is speaking to another user during a telephone call via the device **600**, or in other circumstances. As indicated above, some audio content captured by the microphone **609** can be automatically uploaded to an online service provider.

The speaker **610** allows the device to convert an electrical signal into sound, such as a voice from another user generated by a telephone application program, or a ring tone generated from a ring tone application program. Furthermore, although the device **600** is illustrated in FIG. **6** as a handheld device, in further implementations the device **600** may be a laptop, a workstation, a midrange computer, a mainframe, an embedded system, telephone, desktop PC, a tablet computer, a PDA, or other type of computing device.

FIG. **7** is a block diagram illustrating an internal architecture **700** of the device **600**. The architecture includes a central processing unit (CPU) **701** where the computer instructions that comprise an operating system or an application are processed; a display interface **702** that provides a communication interface and processing functions for rendering video, graphics, images, and texts on the display **601**, provides a set of built-in controls (such as buttons, text and lists), and supports diverse screen sizes; a keyboard interface **704** that provides a communication interface to the keyboard **602**; a pointing device interface **705** that provides a communication interface to the pointing device **604**; an antenna interface **706** that provides a communication interface to the antenna **605**; a network connection interface **707** that provides a communication interface to a network over the computer network connection **606**; a camera interface **708** that provides a communication interface and processing functions for capturing digital images from the camera **607**; a sound interface **709** that provides a communication interface for converting sound into electrical signals using the microphone **609** and for converting electrical signals into sound using the speaker **610**; a random access memory (RAM) **710** where computer instructions and data are stored in a volatile memory device for



LifeScan, Inc. Ex. 1018
Page 19 of 26
IPR2025-00102

processing by the CPU **701**; a read-only memory (ROM) **711** where invariant low-level systems code or data for basic system functions such as basic input and output (I/O), startup, or reception of keystrokes from the keyboard **602** are stored in a non-volatile memory device; a storage medium **712** or other suitable type of memory (e.g. such as RAM, ROM, programmable read-only memory (PROM), erasable programmable read-only memory (EPROM), electrically erasable programmable read-only memory (EEPROM), magnetic disks, optical disks, floppy disks, hard disks, removable cartridges, flash drives), where the files that comprise an operating system **713**, application programs **715** (including, for example, a web browser application, a widget or gadget engine, and or other applications, as necessary, and further including an application for automatically uploading media content, such as an automatic upload management component) and data files **716** are stored; a navigation module **717** that provides a real-world or relative position or geographic location of the device **600**; a power source **719** that provides an appropriate alternating current (AC) or direct current (DC) to power components; and a telephony subsystem **720** that allows the device **600** to transmit and receive sound over a telephone network. The constituent devices and the CPU **701** communicate with each other over a bus **721**.

The CPU **701** can be one of a number of computer processors. In one arrangement, the computer CPU **701** is more than one processing unit. The RAM **710** interfaces with the computer bus **721** so as to provide quick RAM storage to the CPU **701** during the execution of software programs such as the operating system application programs, and device drivers. More specifically, the CPU **701** loads computer-executable process steps from the storage medium **712** or other media into a field of the RAM **710** in order to execute software programs. Data is stored in the RAM **710**, where the data is accessed by the computer CPU **701** during execution. In one example configuration, the device **600** includes at least 128 MB of RAM, and 256 MB of flash memory.

The storage medium **712** itself may include a number of physical drive units, such as a redundant array of independent disks (RAID), a floppy disk drive, a flash memory, a USB flash drive, an external hard disk drive, thumb drive, pen drive, key drive, a High-Density Digital Versatile Disc (HD-DVD) optical disc drive, an internal hard disk drive, a Blu-Ray optical disc drive, or a Holographic Digital Data Storage (HDDS) optical disc drive, an external mini-dual in-line memory module (DIMM) synchronous dynamic random access memory (SDRAM), or an external micro-DIMM SDRAM. Such computer readable storage media allow the device **600** to access computer-executable process steps, application programs and the like, stored on removable and non-removable memory media, to off-load data from the device **600**, or to upload data onto the device **600**.

A computer program product is tangibly embodied in storage medium **712**, a machine-readable storage medium. The computer program product includes instructions that, when read by a machine, operate to cause a data processing apparatus to store image data in the mobile device. In some implementations, the computer program product includes instructions that automatically upload media content to one or more online service providers.

The operating system **713** may be a LINUX-based operating system such as the GOOGLE mobile device platform; APPLE MAC OS X; MICROSOFT WINDOWS NT/WINDOWS 2000/WINDOWS XP/WINDOWS MOBILE; a variety of UNIX-flavored operating systems; or a proprietary operating system for computers or embedded systems. The application development platform or framework for the operating system **713** may be: BINARY RUNTIME ENVIRONMENT FOR WIRELESS (BREW); JAVA Platform, Micro Edition (JAVA ME) or JAVA 2 Platform, Micro Edition (J2ME) using the SUN MICROSYSTEMS JAVASCRIPT programming language; PYTHON™, FLASH LITE, or MICROSOFT .NET Compact, or another appropriate environment.

The device stores computer-executable code for the operating system **713**, and the application programs **715** such as an email, instant messaging, a video service application, a mapping application word processing, spreadsheet, presentation, gaming, mapping, web browsing, JAVASCRIPT engine, or other applications. For example, one implementation may allow a user to access the GOOGLE GMAIL email application, the GOOGLE TALK instant messaging application, a YOUTUBE video service application, a GOOGLE MAPS or GOOGLE EARTH mapping application, or a GOOGLE PICASA imaging editing and presentation application. The application programs **715** may also include a widget or gadget engine, such as a TAFRI™ widget engine, a MICROSOFT gadget engine such as the WINDOWS SIDEBAR gadget engine or the KAPSULES™ gadget engine, a YAHOO! widget engine such as the KONFABULTOR™ widget engine, the APPLE DASHBOARD widget engine, the GOOGLE gadget engine, the KLIPFOLIO widget engine, an OPERA™ widget engine, the WIDSETS™ widget engine, a proprietary widget or gadget engine, or other widget or gadget engine the provides host system software for a physically-inspired applet on a desktop.

Although it is possible for automatic uploading of media content to be provided using the above-described implementation, it may also be possible to implement the functions described herein as a dynamic link library (DLL), or as a plug-in to other application programs such as an Internet web-browser such as the FOXFIRE web browser, the APPLE SAFARI web browser or the MICROSOFT INTERNET EXPLORER web browser.

The navigation module **717** may determine an absolute or relative position of the device, such as by using the Global Positioning System (GPS) signals, the GLObal NAvigation Satellite System (GLONASS), the Galileo positioning system, the Beidou Satellite Navigation and Positioning System, an inertial navigation system, a dead reckoning system, or by accessing address, internet protocol (IP) address, or location information in a database. The navigation module **717** may also be used to measure angular displacement, orientation, or velocity of the device **600**, such as by using one or more accelerometers.

FIG. **8** is a block diagram illustrating exemplary components of the operating system **713** used by a device, in the case where the operating system **713** is the GOOGLE mobile device platform. The operating system **713** invokes multiple processes, while ensuring that the associated phone application is responsive, and that wayward applications do not cause a fault (or crash) of the operating system. Using task switching, the operating system **713** allows for the switching of applications while on a telephone call, without losing the state of each associated application. The operating system **713** may use an application framework to encourage reuse of components, and provide a scalable user experience by combining pointing device and keyboard inputs and by allowing for pivoting. Thus, the operating system can provide a rich graphics system and media experience, while using an advanced, standards-based web browser.

In some implementations, the operating system **713** is organized into six components: a kernel **800**, libraries **801**, an operating system runtime **802**, application libraries **804**, sys-



LifeScan, Inc. Ex. 1018
Page 20 of 26
IPR2025-00102

tem services **805**, and applications **806**. The kernel **800** includes a display driver **807** that allows software such as the operating system **713** and the application programs **715** to interact with the display **601** via the display interface **702**, a camera driver **809** that allows the software to interact with the camera **607**; a BLUETOOTH driver **810**; an M-Systems driver **811**; a binder (IPC) driver **812**, a USB driver **814** a keypad driver **815** that allows the software to interact with the keyboard **602** via the keyboard interface **704**; a WiFi driver **816**; audio drivers **817** that allow the software to interact with the microphone **609** and the speaker **610** via the sound interface **709**; and a power management component **819** that allows the software to interact with and manage the power source **719**.

The BLUETOOTH driver, which in one implementation is based on the BlueZ BLUETOOTH stack for LINUX-based operating systems, provides profile support for headsets and hands-free devices, dial-up networking, personal area networking (PAN), or audio streaming (such as by Advance Audio Distribution Profile (A2DP) or Audio/Video Remote Control Profile (AVRCP). The BLUETOOTH driver provides JAVA bindings for scanning, pairing and unpairing, and service queries.

The libraries **801** include a media framework **820** that supports standard video, audio and still-frame formats (such as Moving Picture Experts Group (MPEG)-4, H.264, MPEG-1 Audio Layer-3 (MP3), Advanced Audio Coding (AAC), Adaptive Multi-Rate (AMR), Joint Photographic Experts Group (JPEG), and others) using an efficient JAVA Application Programming Interface (API) layer; a surface manager **821**; a simple graphics library (SGL) **822** for two-dimensional application drawing; an Open Graphics Library for Embedded Systems (OpenGL ES) **824** for gaming and three-dimensional rendering; a C standard library (LIBC) **825**; a LIBWEBCORE library **826**; a FreeType library **827**; an SSL **829**; and an SQLite library **830**.

The operating system runtime **802** includes core JAVA libraries **831**, and a Dalvik virtual machine **832**. The Dalvik virtual machine **832** is a custom virtual machine that runs a customized file format (.DEX).

The operating system **713** can also include Mobile Information Device Profile (MIDP) components, such as MIDP JAVA Specification Requests (JSRs) components, MIDP runtime, and MIDP applications, as shown in FIG. **7**. The MIDP components can support MIDP applications running on the device **600**.

With regard to graphics rendering, a system-wide composer manages surfaces and a frame buffer and handles window transitions, using the OpenGL ES **824** and two-dimensional hardware accelerators for its compositions.

The Dalvik virtual machine **832** may be used with an embedded environment, since it uses runtime memory very efficiently, implements a CPU-optimized bytecode interpreter, and supports multiple virtual machine processes per device. The custom file format (.DEX) is designed for runtime efficiency, using a shared constant pool to reduce memory, read-only structures to improve cross-process sharing, concise, and fixed-width instructions to reduce parse time, thereby allowing installed applications to be translated into the custom file formal at build-time. The associated bytecodes are designed for quick interpretation, since register-based instead of stack-based instructions reduce memory and dispatch overhead, since using fixed width instructions simplifies parsing, and since the 16-bit code units minimize reads.

The application libraries **804** include a view system **834**, a resource manager **835**, and content providers **837**. The system services **805** includes a status bar **839**; an application launcher **840**; a package manager **841** that maintains information for all installed applications; a telephony manager **842** that provides an application level JAVA interface to the telephony subsystem **820**; a notification manager **844** that allows all applications access to the status bar and on-screen notifications; a window manager **845** that allows multiple applications with multiple windows to share the display **601**; and an activity manager **846** that runs each application in a separate process, manages an application life cycle, and maintains a cross-application history.

The applications **806** include a home application **847**, a dialer application **849**, a contacts application **850**, a browser application **851**, and an automatic media uploading application **852**.

The telephony manager **842** provides event notifications (such as phone state, network state, Subscriber Identity Module (SIM) status, or voicemail status, allows access to state information (such as network information, SIM information, or voicemail presence), initiates calls, and queries and controls the call state. The browser application **851** renders web pages in a full, desktop-like manager, including navigation functions. Furthermore, the browser application **851** allows single column, small screen rendering, and provides for the embedding of HTML views into other applications.

FIG. **9** is a block diagram illustrating exemplary processes implemented by the operating system kernel **900**. Generally, applications and system services run in separate processes, where the activity manager **910** runs each application in a separate process and manages the application life cycle. The applications run in their own processes, although many activities or services can also run in the same process. Processes are started and stopped as needed to run an application's components, and processes may be terminated to reclaim resources. Each application is assigned its own process, whose name is the application's package name, and individual parts of an application can be assigned another process name.

Some processes can be persistent. For example, processes associated with core system components, such as the surface manager **916**, the window manager **914**, or the activity manager **910** can be continuously executed while the device **600** is powered. Additionally, some application-specific processes can also be persistent. For example, processes associated with the dialer application **921**, may also be persistent.

The processes implemented by the operating system kernel **900** may generally be categorized as system services processes **901**, dialer processes **902**, browser processes **904**, and maps processes **905**.

The system services processes **901** include status bar processes **906** associated with the status bar **839**; application launcher processes **907** associated with the application launcher **840**; package manager processes **909** associated with the package manager **841**; activity manager processes **910** associated with the activity manager **846**; resource manager processes **911** associated with a resource manager **835** that provides access to graphics, localized strings, and XML layout descriptions; notification manger processes **912** associated with the notification manager **844**; window manager processes **914** associated with the window manager **845**; core JAVA libraries processes **915** associated with the core JAVA libraries **831**; surface manager processes **916** associated with the surface manager **821**; Dalvik virtual machine processes **917** associated with the Dalvik virtual machine **832**; LIBC processes **919** associated with the LIBC library **825**; and automatic media uploading process **920** associated with the automatic media uploading application **852** (e.g., an automatic upload management component).



LifeScan, Inc. Ex. 1018
Page 21 of 26
IPR2025-00102

The dialer processes **902** include dialer application processes **921** associated with the dialer application **849**; telephony manager processes **922** associated with the telephony manager **842**; core JAVA libraries processes **924** associated with the core JAVA libraries **831**; Dalvik virtual machine processes **925** associated with the Dalvik Virtual machine **832**; and LIBC processes **926** associated with the LIBC library **825**.

The browser processes **904** include browser application processes **927** associated with the browser application **851**; core JAVA libraries processes **929** associated with the core JAVA libraries **831**; Dalvik virtual machine processes **930** associated with the Dalvik virtual machine **832**; LIBWEBCORE processes **931** associated with the LIBWEBCORE library **826**; and LIBC processes **932** associated with the LIBC library **825**.

The maps processes **905** include maps application processes **934**, core JAVA libraries processes **935**, Dalvik virtual machine processes **936**, and LIBC processes **937**. Notably, some processes, such as the Dalvik virtual machine processes, may exist within one or more of the systems services processes **901**, the dialer processes **902**, the browser processes **904**, and the maps processes **905**.

FIG. **10** shows an example of a generic computer device **1000** and a generic mobile computer device **1050**, which may be used with the techniques described here. Computing device **1000** is intended to represent various forms of digital computers, such as laptops, desktops, workstations, personal digital assistants, servers, blade servers, mainframes, and other appropriate computers. Computing device **1050** is intended to represent various forms of mobile devices, such as personal digital assistants, cellular telephones, smartphones, and other similar computing devices. The components shown here, their connections and relationships, and their functions, are meant to be exemplary only, and are not meant to limit implementations of the inventions described and/or claimed in this document.

Computing device **1000** includes a processor **1002**, memory **1004**, a storage device **1006**, a high-speed interface **1008** connecting to memory **1004** and high-speed expansion ports **1010**, and a low speed interface **1012** connecting to low speed bus **1014** and storage device **1006**. Each of the components **1002**, **1004**, **1006**, **1008**, **1010**, and **1012**, are interconnected using various busses, and may be mounted on a common motherboard or in other manners as appropriate. The processor **1002** can process instructions for execution within the computing device **1000**, including instructions stored in the memory **1004** or on the storage device **1006** to display graphical information for a GUI on an external input/output device, such as display **1016** coupled to high speed interface **1008**. In other implementations, multiple processors and/or multiple buses may be used, as appropriate, along with multiple memories and types of memory. Also, multiple computing devices **1000** may be connected, with each device providing portions of the necessary operations (e.g., as a server bank, a group of blade servers, or a multi-processor system).

The memory **1004** stores information within the computing device **1000**. In one implementation, the memory **1004** is a volatile memory unit or units. In another implementation, the memory **1004** is a non-volatile memory unit or units. The memory **1004** may also be another form of computer-readable medium, such as a magnetic or optical disk.

The storage device **1006** is capable of providing mass storage for the computing device **1000**. In one implementation, the storage device **1006** may be or contain a computer-readable medium, such as a floppy disk device, a hard disk device, an optical disk device, or a tape device, a flash memory or other similar solid state memory device, or an array of devices, including devices in a storage area network or other configurations. A computer program product can be tangibly embodied in an information carrier. The computer program product may also contain instructions that, when executed, perform one or more methods, such as those described above. The information carrier is a computer- or machine-readable medium, such as the memory **1004**, the storage device **1006**, memory on processor **1002**, or a propagated signal.

The high speed controller **1008** manages bandwidth-intensive operations for the computing device **1000**, while the low speed controller **1012** manages lower bandwidth-intensive operations. Such allocation of functions is exemplary only. In one implementation, the high-speed controller **1008** is coupled to memory **1004**, display **1016** (e.g., through a graphics processor or accelerator), and to high-speed expansion ports **1010**, which may accept various expansion cards (not shown). In the implementation, low-speed controller **1012** is coupled to storage device **1006** and low-speed expansion port **1014**. The low-speed expansion port, which may include various communication ports (e.g., USB, Bluetooth, Ethernet, wireless Ethernet) may be coupled to one or more input/output devices, such as a keyboard, a pointing device, a scanner, or a networking device such as a switch or router, e.g., through a network adapter.

The computing device **1000** may be implemented in a number of different forms, as shown in the figure. For example, it may be implemented as a standard server **1020**, or multiple times in a group of such servers. It may also be implemented as part of a rack server system **1024**. In addition, it may be implemented in a personal computer such as a laptop computer **1022**. Alternatively, components from computing device **1000** may be combined with other components in a mobile device (not shown), such as device **1050**. Each of such devices may contain one or more of computing device **1000**, **1050**, and an entire system may be made up of multiple computing devices **1000**, **1050** communicating with each other.

Computing device **1050** includes a processor **1052**, memory **1064**, an input/output device such as a display **1054**, a communication interface **1066**, and a transceiver **1068**, among other components. The device **1050** may also be provided with a storage device, such as a microdrive or other device, to provide additional storage. Each of the components **1050**, **1052**, **1064**, **1054**, **1066**, and **1068**, are interconnected using various buses, and several of the components may be mounted on a common motherboard or in other manners as appropriate.

The processor **1052** can execute instructions within the computing device **1050**, including instructions stored in the memory **1064**. The processor may be implemented as a chipset of chips that include separate and multiple analog and digital processors. The processor may provide, for example, for coordination of the other components of the device **1050**, such as control of user interfaces, applications run by device **1050**, and wireless communication by device **1050**.

Processor **1052** may communicate with a user through control interface **1058** and display interface **1056** coupled to a display **1054**. The display **1054** may be, for example, a TFT LCD (Thin-Film-Transistor Liquid Crystal Display) or an OLED (Organic Light Emitting Diode) display, or other appropriate display technology. The display interface **1056** may comprise appropriate circuitry for driving the display **1054** to present graphical and other information to a user. The control interface **1058** may receive commands from a user and convert them for submission to the processor **1052**. In



LifeScan, Inc. Ex. 1018
Page 22 of 26
IPR2025-00102

addition, an external interface **1062** may be provide in communication with processor **1052**, so as to enable near area communication of device **1050** with other devices. External interface **1062** may provide, for example, for wired communication in some implementations, or for wireless communication in other implementations, and multiple interfaces may also be used.

The memory **1064** stores information within the computing device **1050**. The memory **1064** can be implemented as one or more of a computer-readable medium or media, a volatile memory unit or units, or a non-volatile memory unit or units. Expansion memory **1074** may also be provided and connected to device **1050** through expansion interface **1072**, which may include, for example, a SIMM (Single In Line Memory Module) card interface. Such expansion memory **1074** may provide extra storage space for device **1050**, or may also store applications or other information for device **1050**. Specifically, expansion memory **1074** may include instructions to carry out or supplement the processes described above, and may include secure information also. Thus, for example, expansion memory **1074** may be provide as a security module for device **1050**, and may be programmed with instructions that permit secure use of device **1050**. In addition, secure applications may be provided via the SIMM cards, along with additional information, such as placing identifying information on the SIMM card in a non-hackable manner.

The memory may include, for example, flash memory and/or NVRAM memory, as discussed below. In one implementation, a computer program product is tangibly embodied in an information carrier. The computer program product contains instructions that, when executed, perform one or more methods, such as those described above. The information carrier is a computer- or machine-readable medium, such as the memory **1064**, expansion memory **1074**, memory on processor **1052**, or a propagated signal that may be received, for example, over transceiver **1068** or external interface **1062**.

Device **1050** may communicate wirelessly through communication interface **1066**, which may include digital signal processing circuitry where necessary. Communication interface **1066** may provide for communications under various modes or protocols, such as GSM voice calls, SMS, EMS, or MMS messaging, CDMA, TDMA, PDC, WCDMA, CDMA2000, or GPRS, among others. Such communication may occur, for example, through radio-frequency transceiver **1068**. In addition, short-range communication may occur, such as using a Bluetooth, WiFi, or other such transceiver (not shown). In addition, GPS (Global Positioning System) receiver module **1070** may provide additional navigation- and location-related wireless data to device **1050**, which may be used as appropriate by applications running on device **1050**.

Device **1050** may also communicate audibly using audio codec **1060**, which may receive spoken information from a user and convert it to usable digital information. Audio codec **1060** may likewise generate audible sound for a user, such as through a speaker, e.g., in a handset of device **1050**. Such sound may include sound from voice telephone calls, may include recorded sound (e.g., voice messages, music files, etc.) and may also include sound generated by applications operating on device **1050**.

The computing device **1050** may be implemented in a number of different forms, as shown in the figure. For example, it may be implemented as a cellular telephone **1080**. It may also be implemented as part of a smartphone **1082**, personal digital assistant, or other similar mobile device.

Various implementations of the systems and techniques described here can be realized in digital electronic circuitry, integrated circuitry, specially designed ASICs (application specific integrated circuits), computer hardware, firmware, software, and/or combinations thereof. These various implementations can include implementation in one or more computer programs that are executable and/or interpretable on a programmable system including at least one programmable processor, which may be special or general purpose, coupled to receive data and instructions from, and to transmit data and instructions to, a storage system, at least one input device, and at least one output device.

These computer programs (also known as programs, software, software applications or code) include machine instructions for a programmable processor, and can be implemented in a high-level procedural and/or object-oriented programming language, and/or in assembly/machine language. As used herein, the terms "machine-readable medium" "computer-readable medium" refers to any computer program product, apparatus and/or device (e.g., magnetic discs, optical disks, memory, Programmable Logic Devices (PLDs)) used to provide machine instructions and/or data to a programmable processor, including a machine-readable medium that receives machine instructions as a machine-readable signal. The term "machine-readable signal" refers to any signal used to provide machine instructions and/or data to a programmable processor.

To provide for interaction with a user, the systems and techniques described here can be implemented on a computer having a display device (e.g., a CRT (cathode ray tube) or LCD (liquid crystal display) monitor) for displaying information to the user and a keyboard and a pointing device (e.g., a mouse or a trackball) by which the user can provide input to the computer. Other kinds of devices can be used to provide for interaction with a user as well; for example, feedback provided to the user can be any form of sensory feedback (e.g., visual feedback, auditory feedback, or tactile feedback); and input from the user can be received in any form, including acoustic, speech, or tactile input.

The systems and techniques described here can be implemented in a computing system that includes a back end component (e.g., as a data server), or that includes a middleware component (e.g., an application server), or that includes a front end component (e.g., a client computer having a graphical user interface or a Web browser through which a user can interact with an implementation of the systems and techniques described here), or any combination of such back end, middleware, or front end components. The components of the system can be interconnected by any form or medium of digital data communication (e.g., a communication network). Examples of communication networks include a local area network ("LAN"), a wide area network ("WAN"), and the Internet.

The computing system can include clients and servers. A client and server are generally remote from each other and typically interact through a communication network. The relationship of client and server arises by virtue of computer programs running on the respective computers and having a client-server relationship to each other.

A number of implementations have been described. Nevertheless, it will be understood that various modifications may be made without departing from the spirit and scope of the disclosed implementations. For example, for purposes of illustration, various examples have been provided in the context of mobile devices such as cell phones or smartphones having media-capturing input devices. However, methods and systems described herein can also be provided by various other kinds of devices—whether or not those devices are traditionally characterized as mobile. In particular, for



LifeScan, Inc. Ex. 1018
Page 23 of 26
IPR2025-00102

example, a digital camera may be wireless equipped to employ the methods described herein to automatically upload media to an online service provider, without contemporaneous user interaction. In addition, fixed computing devices (e.g., desktop computers equipped with image, video or sound-capturing input devices) can employ the methods described herein to automatically upload media content to an online service provider. Similarly, other types of devices, such as refrigerator or countertop computing devices, or other household appliances (e.g., microwaves, ovens, dishwashers, wine cabinets, washers, dryers, etc.), with media-capturing input components (e.g., cameras) can also employ the methods described herein to automatically upload media content to an online service provider. Various other devices are also contemplated, and in some implementations, the devices may communicate with an online service provider through a wired connection. Moreover, various examples describe media content being uploaded to a single online service provider; in some implementations, media content can be automatically uploaded to multiple online service providers. For example, a user's digital images may be automatically uploaded to a PICASA™ account, a FACEBOOK account and a FLICKR™ account if the user appropriately configures his or her device. In addition, the logic flows depicted in the figures may not require the particular order shown, or sequential order to achieve desirable results. In addition, other steps may be provided, or steps may be eliminated, from the described flows, and other components may be added to, or removed from, the described systems. Other implementations are within the scope of the following claims.

What is claimed is:

**1**. A computer-implemented method for automatically uploading media content from a mobile device to an online service provider, the method comprising:

receiving, with a mobile device that has a media input component to capture media content and a wireless communication component to wirelessly send data to and wirelessly receive data from a plurality of online service providers that are external to the mobile device, a selection by a user of the mobile device of a user-selected service provider from among the plurality of online service providers that are available to the user;

identifying information that corresponds to a user account associated with the user-selected service provider;

receiving, with the mobile device, a selection by the user of a configuration setting that indicates availability, at the user-selected service provider, of media content that is to be uploaded after the selection of the configuration setting;

capturing media content with the media input component; and

after the media content is captured, automatically selecting with the mobile device the user-selected service provider as a recipient of the captured media content and automatically uploading to the user-selected service provider the captured media content, the identifying information, and an indication of the configuration setting to cause the uploaded media content to be made available in accordance with the configuration setting, wherein automatically uploading the captured media content comprises automatically uploading media content that has not been deleted within a predetermined time of being captured, wherein media content that has been deleted within the predetermined time of being captured is not uploaded, and wherein the user-selected service provider comprises an online audio-sharing service provider.

**2**. The computer-implemented method of claim **1**, wherein the mobile device is a smartphone and the media input device comprises at least one of a still-image camera, a video camera and a microphone.

**3**. The computer-implemented method of claim **1**, wherein the mobile device is a wirelessly-equipped digital camera.

**4**. The computer-implemented method of claim **1**, wherein the mobile device is a Global Positioning System (GPS)-equipped mobile device, and the captured media content comprises a plurality of GPS-mapped locations corresponding to a route over which the GPS-equipped mobile device traveled.

**5**. The computer-implemented method of claim **1**, wherein the identifying information comprises a device identifier associated with the mobile device.

**6**. The computer-implemented method of claim **1**, wherein the identifying information comprises access-control information associated with the user account.

**7**. A computer-implemented method for automatically uploading media content from a mobile device to an online service provider, the method comprising:

receiving, with a mobile device that has a media input component configured to capture media content and a wireless communication component configured to wirelessly send data to and wirelessly receive data from a plurality of online service providers that are external to the mobile device, identifying information corresponding to a user account associated with at least one of the plurality of online service providers;

receiving, with the mobile device, a selection of a configuration setting that indicates whether media content that is to be uploaded after the selection of the configuration setting should be publicly available or less than publicly available at the at least one of the plurality of online service providers;

capturing media content with the media input component; and

after the media content is captured, automatically uploading to the at least one of the plurality of online service providers the captured media content, the identifying information, and an indication of the configuration setting to cause the uploaded media content to be made available in accordance with the configuration setting without receiving user input that a) is contemporaneous with the automatic uploading or that b) specifies that the captured media content is to be uploaded to the at least one of the plurality of online service providers, wherein automatically uploading the captured media content comprises automatically uploading media content that has not been deleted within a predetermined time of being captured, wherein media content that has been deleted within the predetermined time of being captured is not uploaded, and wherein the at least one of the plurality of online service provider comprises an online audio-sharing service provider.

**8**. The computer-implemented method of claim **1**, wherein the configuration setting causes the captured media content to be made available only to one or more other user accounts associated with one or more of the plurality of online service providers.

**9**. The computer-implemented method of claim **8**, further comprising causing a message to be sent to each of the one or more other user accounts when the captured media content has been automatically uploaded to the at least one online service provider.

**10**. The computer-implemented method of claim **9**, wherein causing a message to be sent comprises automati-



LifeScan, Inc. Ex. 1018
Page 24 of 26
IPR2025-00102

cally sending an electronic message from the mobile device to the one or more other user accounts.

**11**. The computer-implemented method of claim **9**, wherein causing a message to be sent comprises providing a control signal to the at least one online service provider that causes the at least one online service provider to send an electronic message to the one or more other user accounts.

**12**. The computer-implemented method of claim **1**, wherein automatically uploading the captured media content comprises automatically uploading portions of the captured media content with the wireless communication component when the wireless communication component has available bandwidth over a channel coupling the mobile device and the at least one online service provider.

**13**. A computer-implemented method for automatically uploading media content from a mobile device to an online service provider, the method comprising:

receiving, with a mobile device that has a media input component configured to capture media content and a wireless communication component configured to wirelessly send data to and wirelessly receive data from a plurality of online service providers that are external to the mobile device, identifying information corresponding to a user account associated with at least one of the plurality of online service providers;

receiving, with the mobile device, a selection of a configuration setting that indicates availability, at the at least one of the plurality of online service providers, of media content that is to be uploaded after the selection of the configuration setting;

capturing media content with the media input component;

after the media content is captured, automatically uploading to the at least one of the plurality of online service providers the captured media content, the identifying information, and an indication of the configuration setting to cause the uploaded media content to be made available in accordance with the configuration setting without receiving user input that a) is contemporaneous with the automatic uploading or that b) specifies that the captured media content is to be uploaded to the at least one of the plurality of online service providers, wherein automatically uploading the captured media content comprises automatically uploading media content that has not been deleted within a predetermined time of being captured, wherein media content that has been deleted within the predetermined time of being captured is not uploaded, and wherein the at least one of the plurality of online service provider comprises an online audio-sharing service provider; and

automatically uploading to a second online service provider of the plurality of online service providers the captured media content, wherein the second online service provider is different than the at least one of the plurality of online service providers, and wherein automatically uploading to the second online service provider comprises automatically uploading without receiving user input that a) is contemporaneous to the automatic uploading to the second online service provider and b) that specifies that the captured media content is to be uploaded to the second online service provider, wherein the second online service provider of the plurality of online service provider comprises an online audio-sharing service provider.

**14**. The computer-implemented method of claim **1**, wherein capturing media content comprises storing geographical location information associated with the mobile device at a point in time when the media content is captured, and wherein automatically uploading the captured media content comprises uploading with the captured media content the stored geographical location information.

**15**. The computer-implemented method of claim **1**, further comprising providing status information in the mobile device that indicates a current status of the automatic uploading of the captured media content to the at least one online service provider, the status information displayed on the mobile device to show how much media content has been uploaded from the mobile device.

**16**. A device for capturing and automatically uploading media content to an online service provider, the device comprising:

a communication component configured to send data to and receive data from a plurality of online service providers that are external to the device;

a media content-capturing component;

a graphical user interface to receive a first selection, by a user, of a service provider from among the plurality of online service providers and a second selection of a configuration setting that indicates availability, at the currently selected service provider, of media content that is to be uploaded after the second selection of the configuration setting;

memory configured to store a) identifying information that corresponds to a user account associated with at least one of the plurality of online service providers, b) captured media content that is acquired by the media content-capturing component, and

c) identifiers for the service provider and the configuration setting that are currently selected by the user; and

an automatic upload management component configured to automatically upload, to the service provider that is currently selected by the user, the captured media content, the identifying information, and an indication of the configuration setting to cause the uploaded media content to be made available in accordance with the configuration setting, wherein automatically uploading the captured media content comprises automatically uploading media content that has not been deleted within a predetermined time of being captured, wherein media content that has been deleted within the predetermined time of being captured is not uploaded, and wherein the service provider that is currently selected by the user comprises an online audio-sharing service provider.

**17**. The device of claim **16**, further comprising a component that provides a function associated with a household appliance, the function selected from the group consisting of heating or cooling food or beverage items, washing household items, or drying household items.

**18**. A device for capturing and automatically uploading media content to an online service provider, the device comprising:

a communication component configured to send data to and receive data from a plurality of online service providers that are external to the device;

a media content-capturing component;

a graphical user interface component programmed to receive a first selection, by a user, of a service provider from among the plurality of online service providers and a second selection of a configuration setting that indicates availability, at the currently selected service provider, of media content that is to be uploaded after the selection of the configuration setting;

memory configured to store a) identifying information corresponding to a user account associated with at least one



LifeScan, Inc. Ex. 1018
Page 25 of 26
IPR2025-00102

of the plurality of online service providers, b) captured media content that is acquired by the media content-capturing component, and c) identifiers for the service provider and the configuration setting that are currently selected by the user; and

means for automatically uploading, to the service provider that is currently selected by the user, the captured media content, the identifying information, and an indication of the configuration setting to cause the uploaded media content to be made available in accordance with the configuration setting, wherein automatically uploading the captured media content comprises automatically uploading media content that has not been deleted within a predetermined time of being captured, wherein media content that has been deleted within the predetermined time of being captured is not uploaded, and wherein the service provider that is currently selected by the user comprises an online audio-sharing service provider.

**19**. The computer-implemented method of claim **1**, further comprising providing for display to the user a graphical component that permits the user to select whether to make uploaded media content publicly available or less than publicly available.

**20**. The computer-implemented method of claim **1**, further comprising causing the uploaded media content to be made available according to relationships formed in a social network of which the user is a member.

**21**. The computer-implemented method of claim **1**, further comprising displaying graphical indications of a plurality of media files, and uploading media content in accordance with selections of particular ones of the media files on the mobile device.

**22**. The computer-implemented method of claim **1**, further comprising interacting, by the mobile device, with the user of the mobile device after capturing the media content but before automatically uploading the media content.

**23**. The computer-implemented method of claim **1**, wherein the user-selected service provider is entered by the user as an overriding service provider for a previously provided and stored default service provider.

**24**. The computer-implemented method of claim **1**, wherein the identifying information comprises a user account identifier and password that are selected to match the user-selected service provider.

**25**. The computer-implemented method of claim **1**, wherein the indication of the configuration setting causes the uploaded media content to be made available to one or more other user accounts associated with one or more of the plurality of online service providers, and to members of the general public who do not have accounts associated with one or more of the plurality of online service providers.

* * * * *