US 20120255734A1

(19) United States

(12) Patent Application Publication

(10) Pub. No.: US 2012/0255734 A1

(43) Pub. Date: Oct. 11, 2012

Coli et al.

(54) **MOBILE, MODULAR, ELECTRICALLY POWERED SYSTEM FOR USE IN FRACTURING UNDERGROUND FORMATIONS**

(76) Inventors: **Todd Coli**, Calgary (CA); **Eldon Schelske**, Calgary (CA)

(21) Appl. No.: **13/441,334**

(22) Filed: **Apr. 6, 2012**

Related U.S. Application Data

(60) Provisional application No. 61/472,861, filed on Apr. 7, 2011.

Publication Classification

(51) **Int. Cl.**
E21B 43/26 (2006.01)

(52) **U.S. Cl.** **166/305.1**; 166/177.5

(57) **ABSTRACT**

The present invention provides a method and system for providing on-site electrical power to a fracturing operation, and an electrically powered fracturing system. Natural gas can be used to drive a turbine generator in the production of electrical power. A scalable, electrically powered fracturing fleet is provided to pump fluids for the fracturing operation, obviating the need for a constant supply of diesel fuel to the site and reducing the site footprint and infrastructure required for the fracturing operation, when compared with conventional systems.

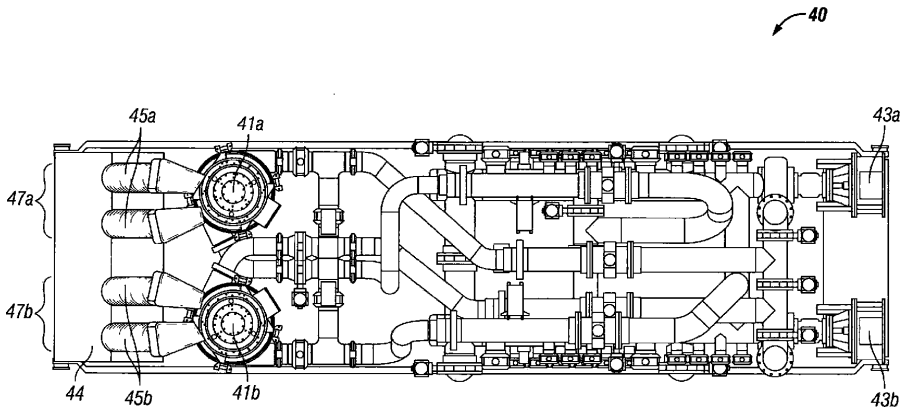

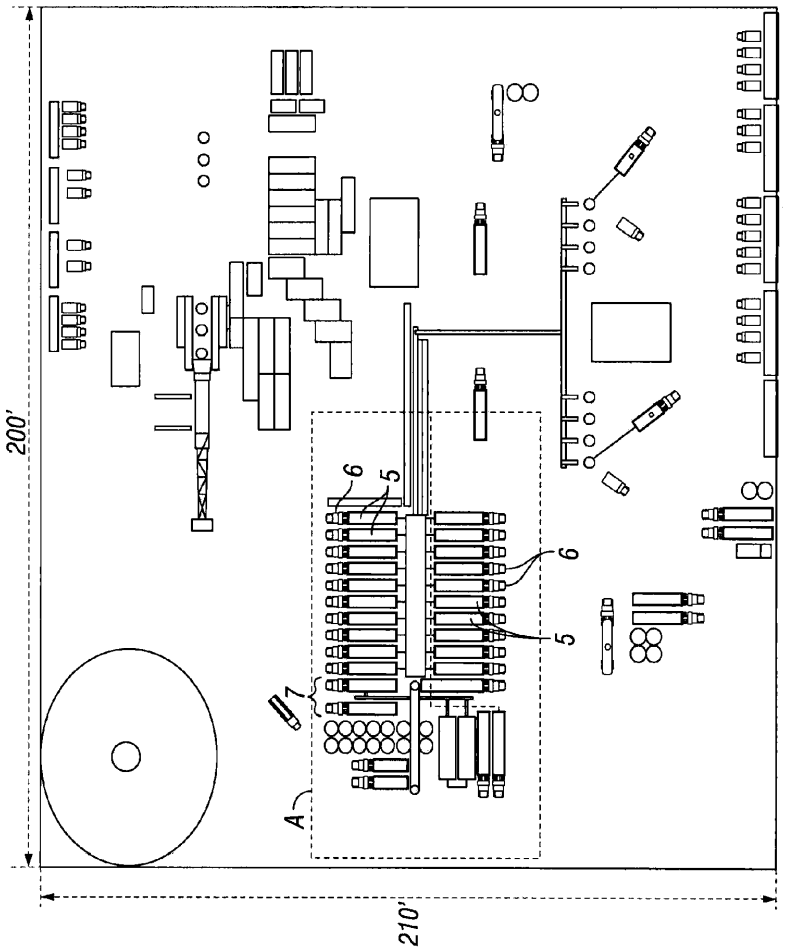

FIG. 1
(Prior Art)

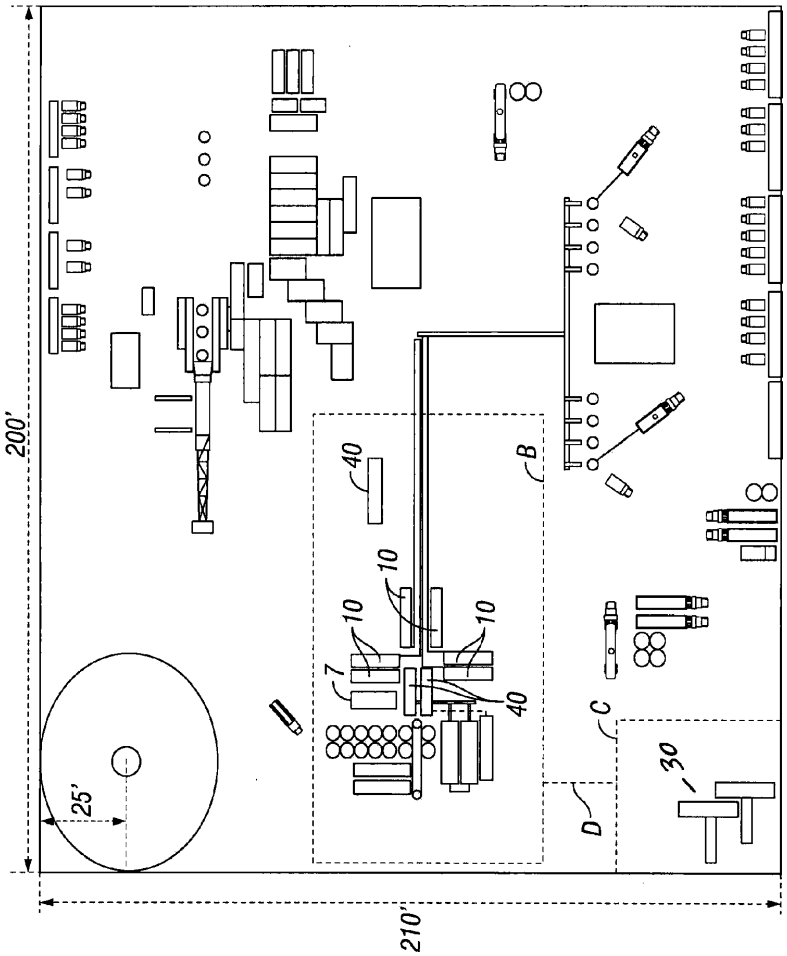

FIG. 2

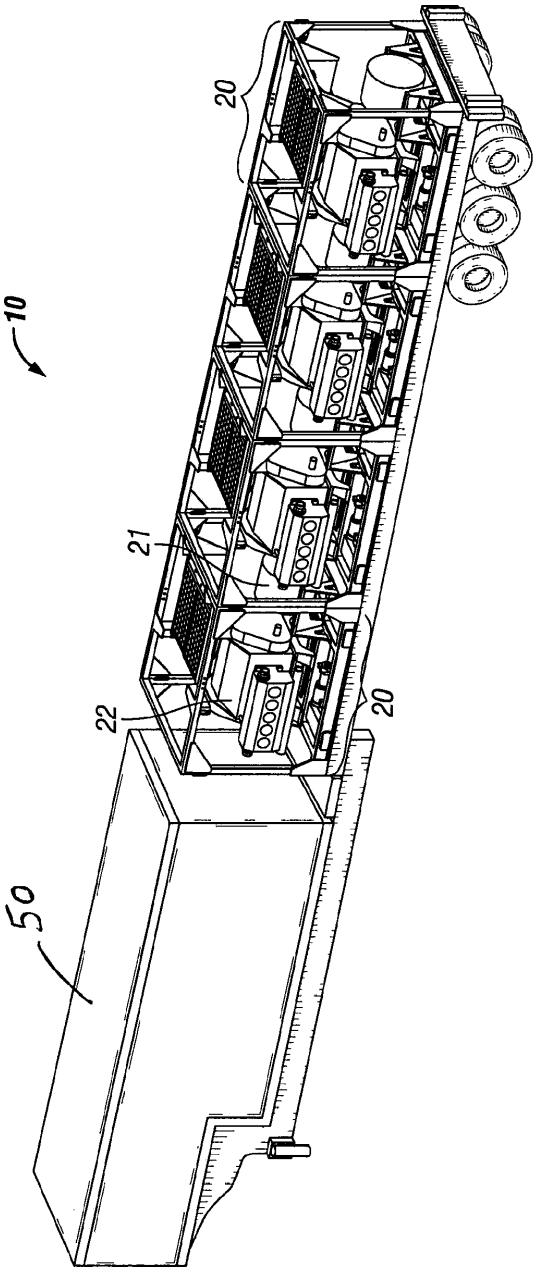

FIG. 3

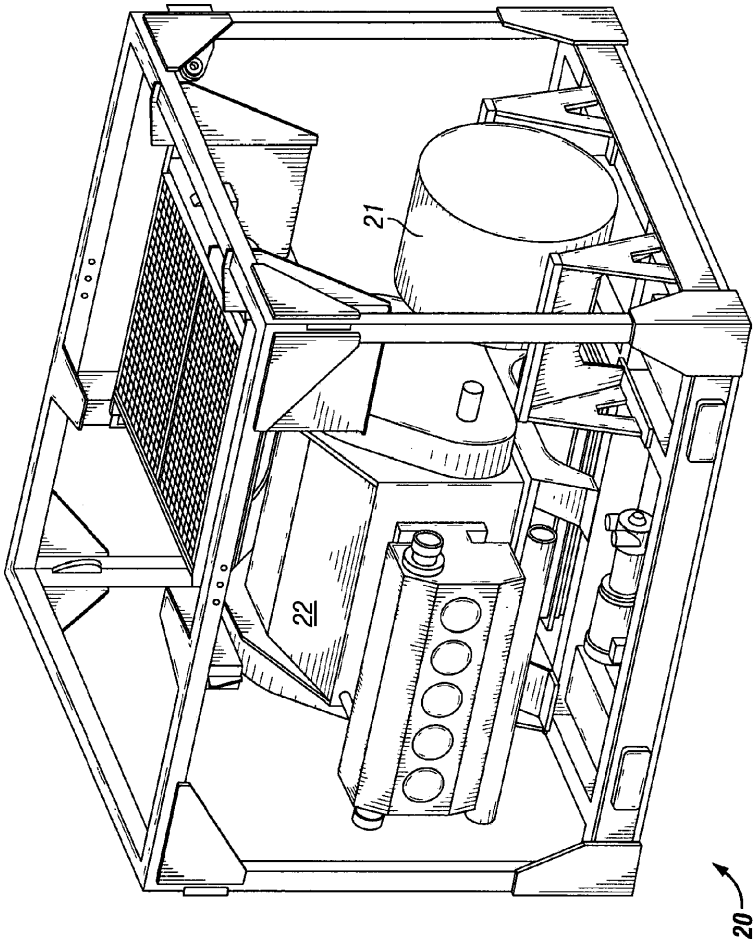

FIG. 4A

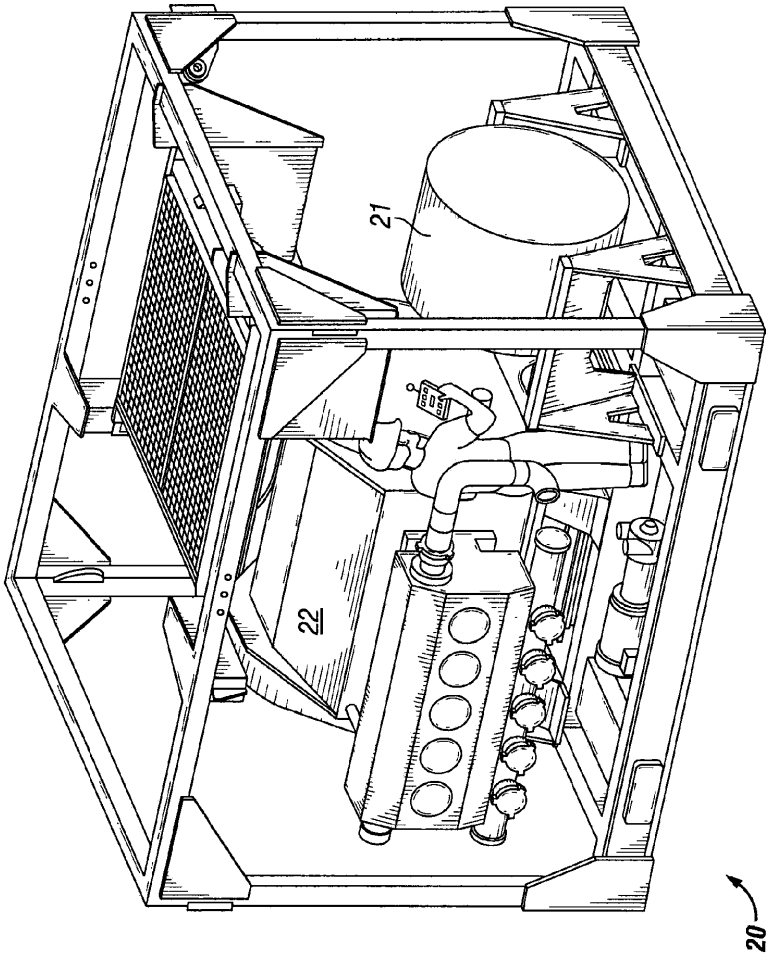

FIG. 4B

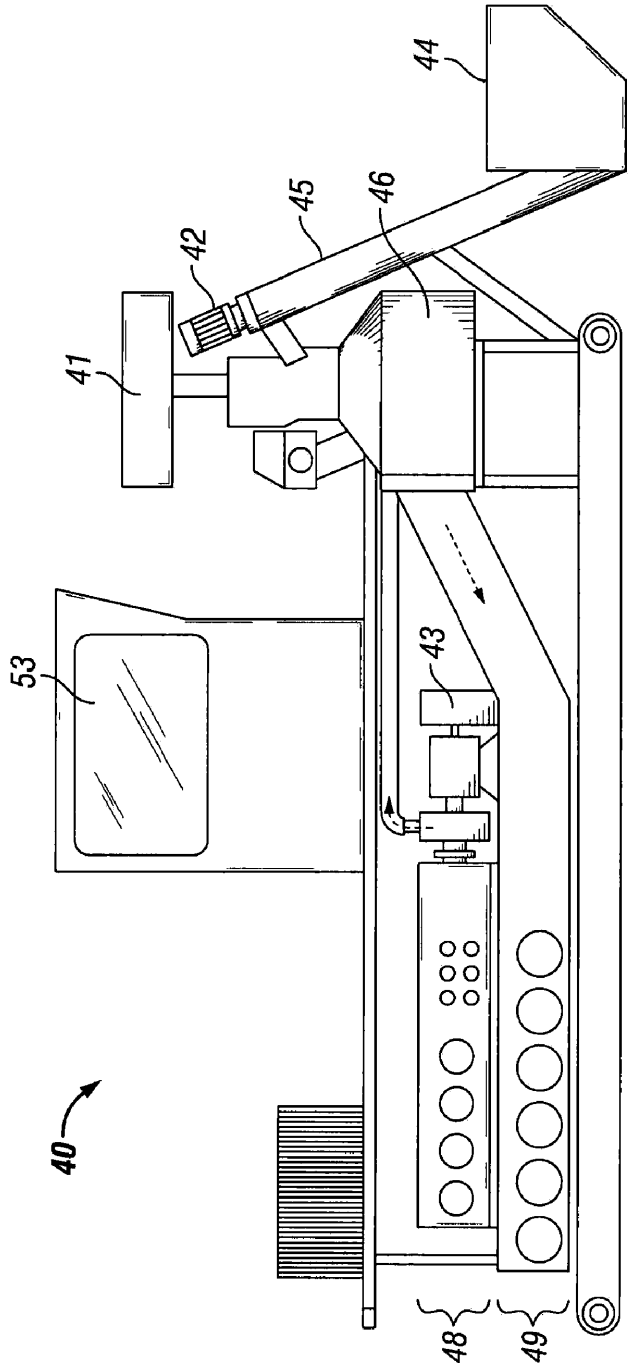

FIG. 5A

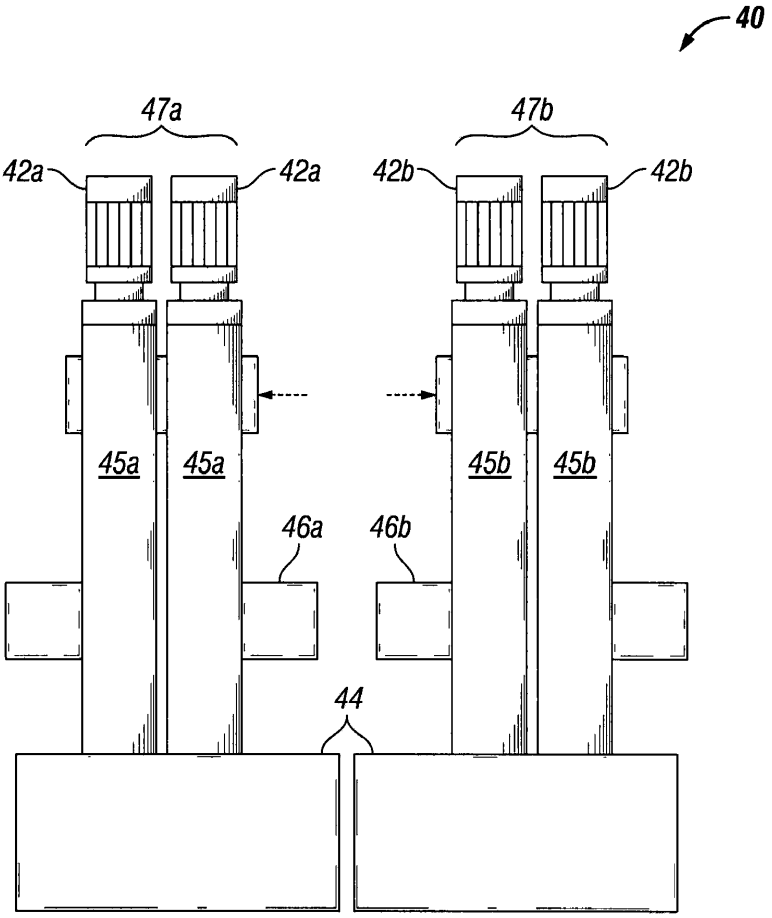

FIG. 5B

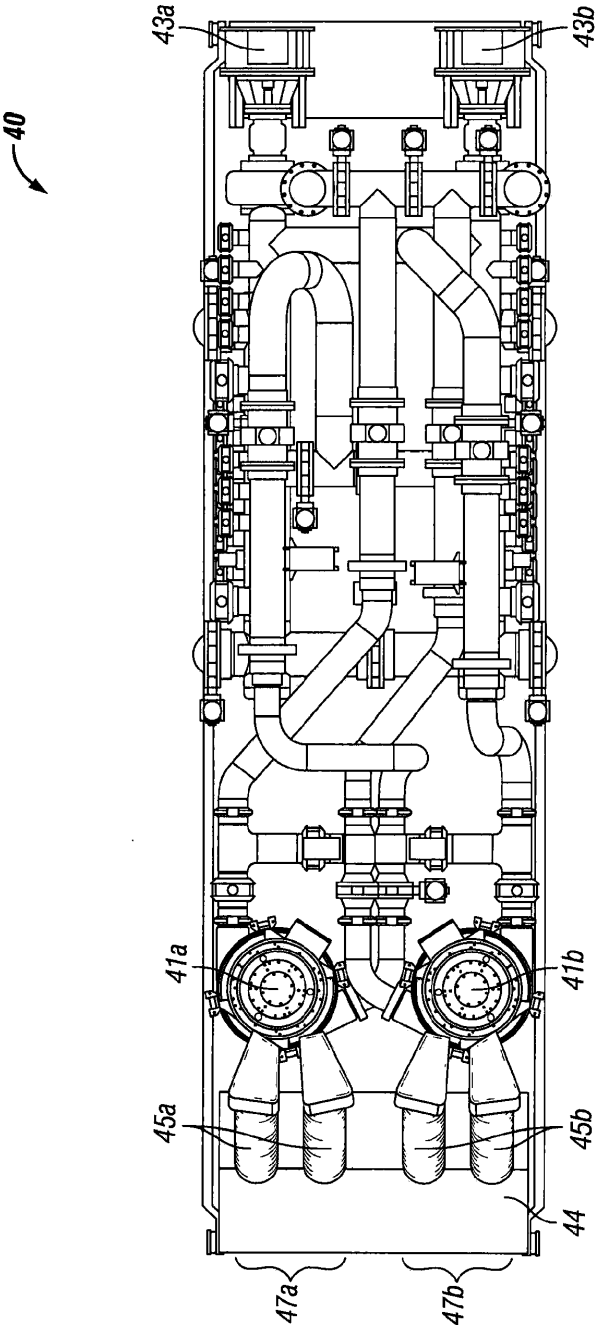

FIG. 5C

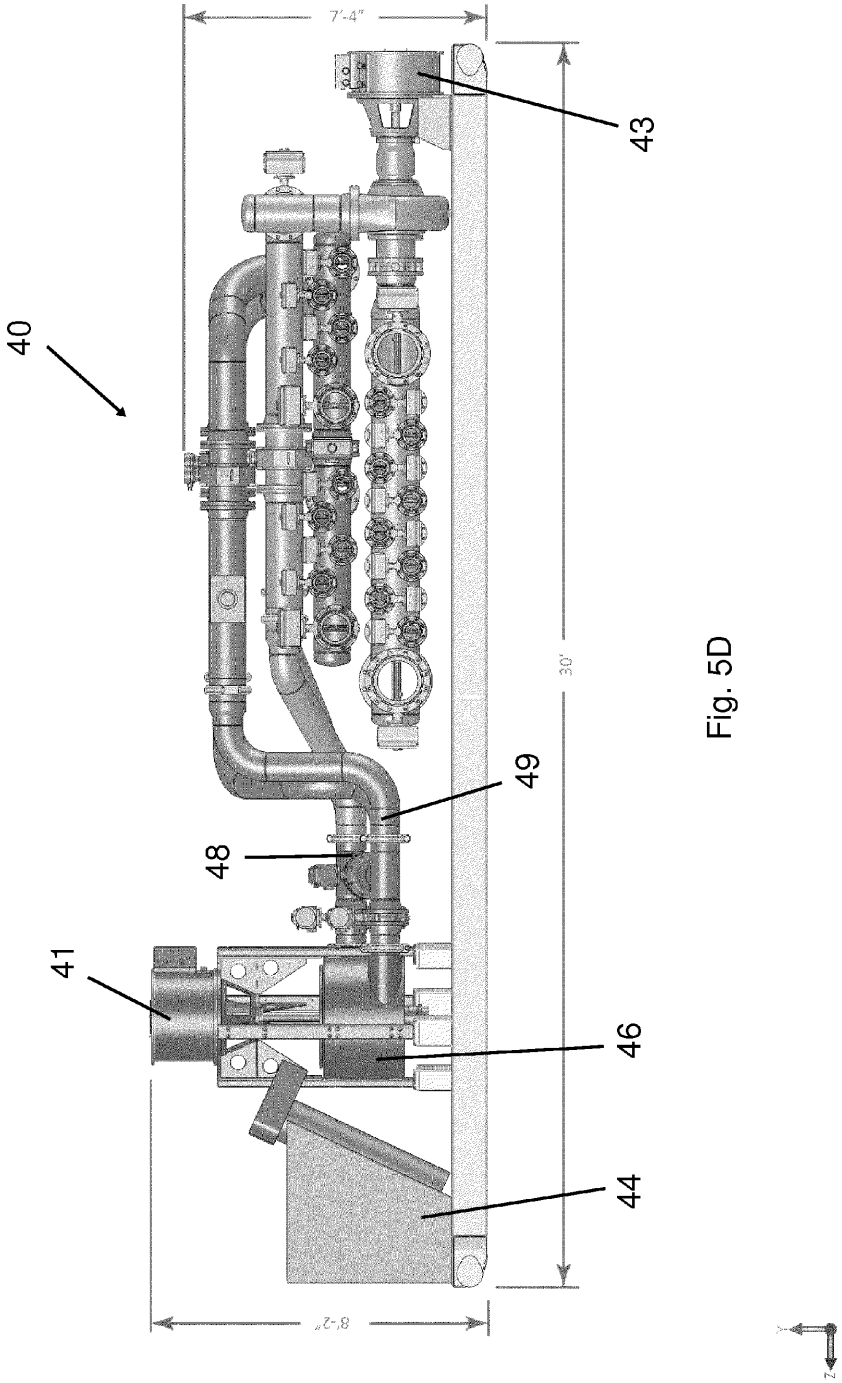

Fig. 5D

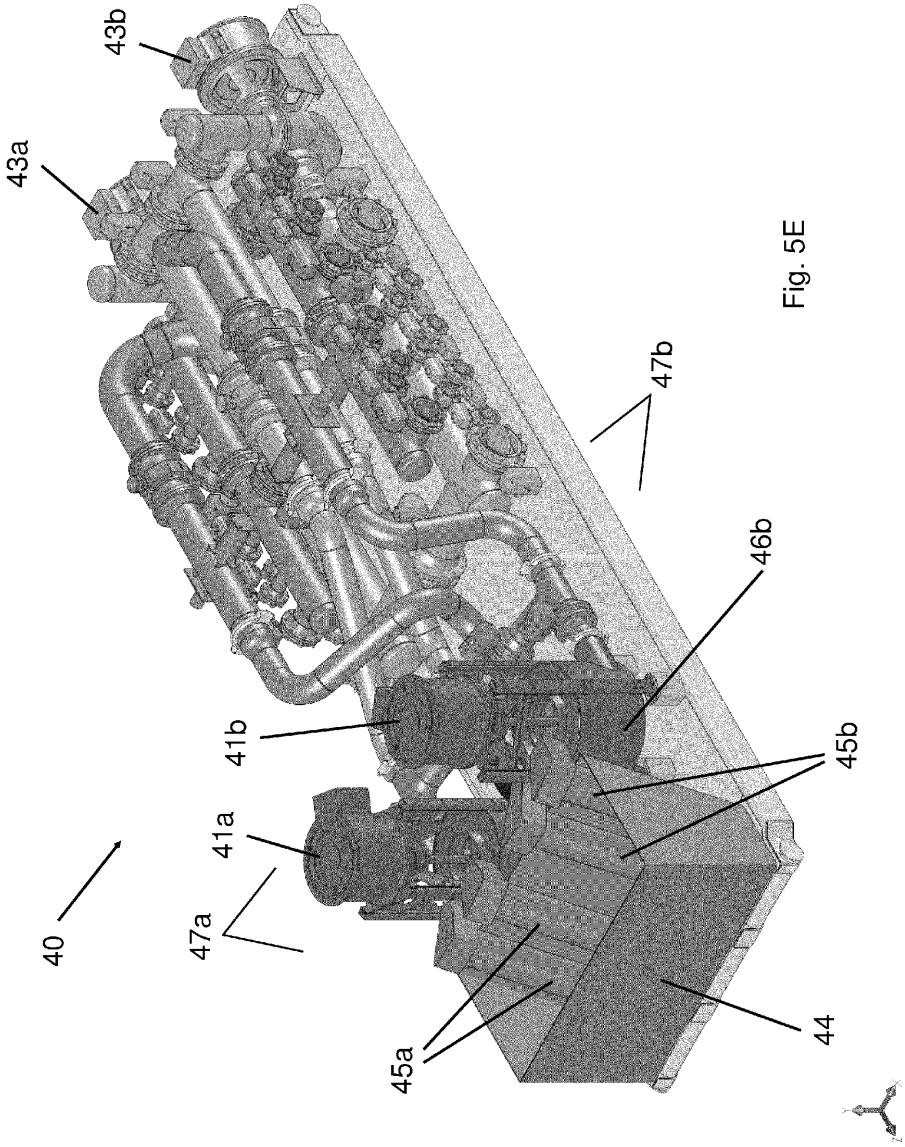

Fig. 5E

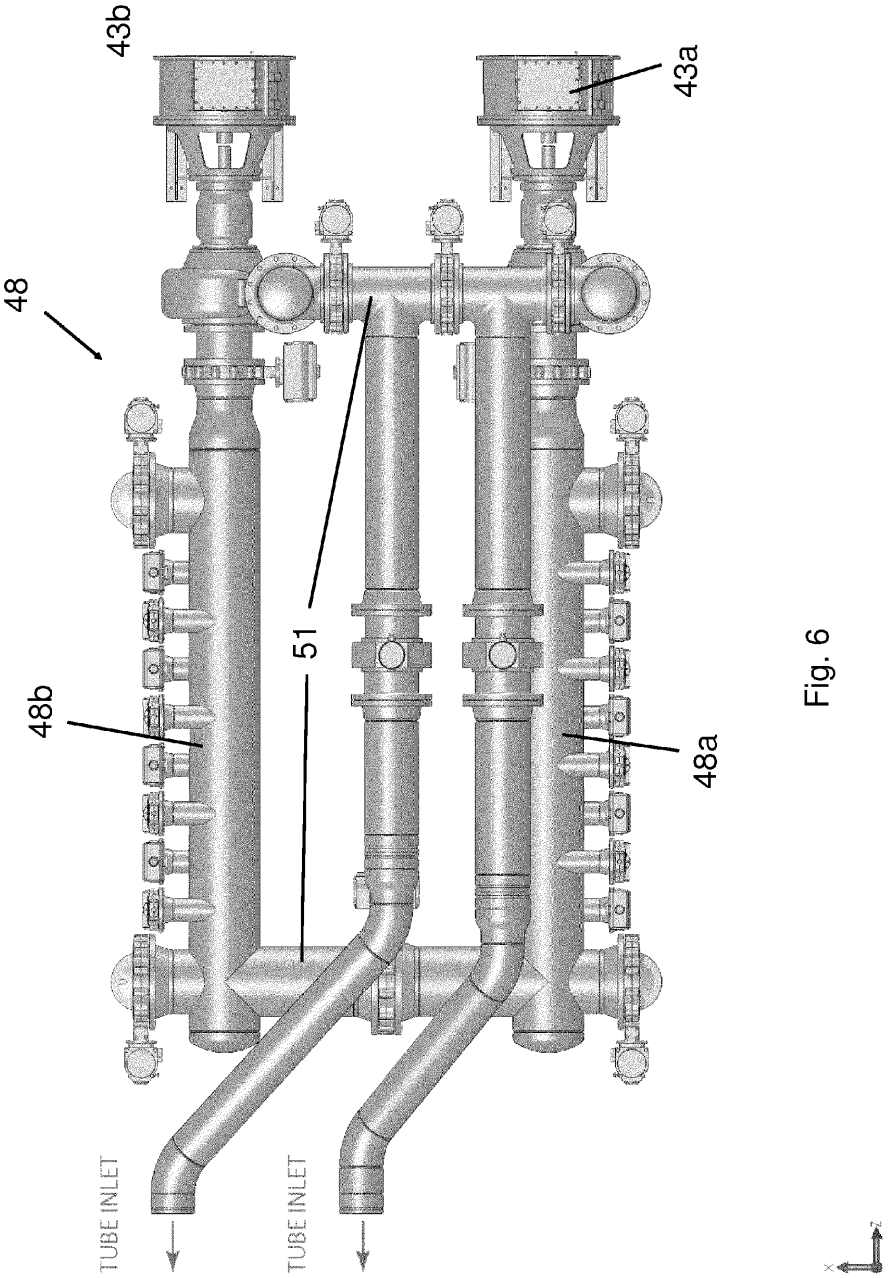

Fig. 6

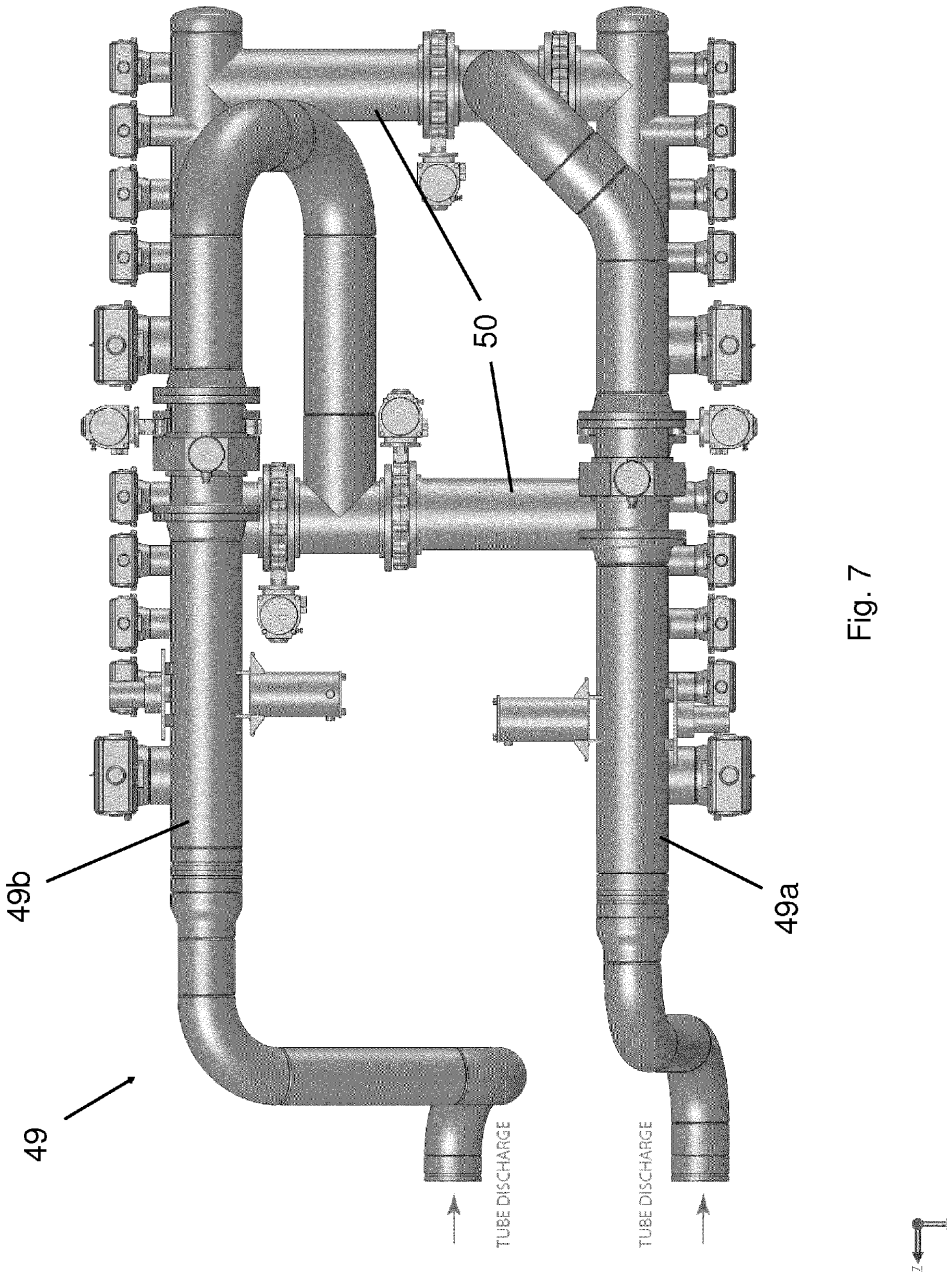

Fig. 7

MOBILE, MODULAR, ELECTRICALLY POWERED SYSTEM FOR USE IN FRACTURING UNDERGROUND FORMATIONS

CROSS REFERENCE TO RELATED APPLICATIONS

[0001] This application claims the benefit, and priority benefit, of U.S. Provisional Patent Application Ser. No. 61/472,861, filed Apr. 7, 2011, titled "MOBILE, MODULAR, ELECTRICALLY POWERED SYSTEM FOR USE IN FRACTURING UNDERGROUND FORMATIONS," the disclosure of which is incorporated herein in its entirety.

BACKGROUND

[0002] 1. Field of Invention

[0003] This invention relates generally to hydraulic stimulation of underground hydrocarbon-bearing formations, and more particularly, to the generation and use of electrical power to deliver fracturing fluid to a wellbore.

[0004] 2. Description of the Related Art

[0005] Over the life cycle of a typical hydrocarbon-producing wellbore, various fluids (along with additives, proppants, gels, cement, etc. . . .) can be delivered to the wellbore under pressure and injected into the wellbore. Surface pumping systems must be able to accommodate these various fluids. Such pumping systems are typically mobilized on skids or tractor-trailers and powered using diesel motors.

[0006] Technological advances have greatly improved the ability to identify and recover unconventional oil and gas resources. Notably, horizontal drilling and multi-stage fracturing have led to the emergence of new opportunities for natural gas production from shale formations. For example, more than twenty fractured intervals have been reported in a single horizontal wellbore in a tight natural gas formation. However, significant fracturing operations are required to recover these resources.

[0007] Currently contemplated natural gas recovery opportunities require considerable operational infrastructure, including large investments in fracturing equipment and related personnel. Notably, standard fluid pumps require large volumes of diesel fuel and extensive equipment maintenance programs. Typically, each fluid pump is housed on a dedicated truck and trailer configuration. With average fracturing operations requiring as many as fifty fluid pumps, the on-site area, or "footprint", required to accommodate these fracturing operations is massive. As a result, the operational infrastructure required to support these fracturing operations is extensive. Greater operational efficiencies in the recovery of natural gas would be desirable.

[0008] When planning large fracturing operations, one major logistical concern is the availability of diesel fuel. The excessive volumes of diesel fuel required necessitates constant transportation of diesel tankers to the site, and results in significant carbon dioxide emissions. Others have attempted to decrease fuel consumption and emissions by running large pump engines on "Bi-Fuel", blending natural gas and diesel fuel together, but with limited success. Further, attempts to decrease the number of personnel on-site by implementing remote monitoring and operational control have not been successful, as personnel are still required on-site to transport the equipment and fuel to and from the location.

SUMMARY

[0009] Various illustrative embodiments of a system and method for hydraulic stimulation of underground hydrocarbon-bearing formations are provided herein. In accordance with an aspect of the disclosed subject matter, a method of delivering fracturing fluid to a wellbore is provided. The method can comprise the steps of: providing a dedicated source of electric power at a site containing a wellbore to be fractured; providing one or more electric fracturing modules at the site, each electric fracturing module comprising an electric motor and a coupled fluid pump, each electric motor operatively associated with the dedicated source of electric power; providing a wellbore treatment fluid for pressurized delivery to a wellbore, wherein the wellbore treatment fluid can be continuous with the fluid pump and with the wellbore; and operating the fracturing unit using electric power from the dedicated source to pump the treatment fluid to the wellbore.

[0010] In certain illustrative embodiments, the dedicated source of electrical power is a turbine generator. A source of natural gas can be provided, whereby the natural gas drives the turbine generator in the production of electrical power. For example, natural gas can be provided by pipeline, or natural gas produced on-site. Liquid fuels such as condensate can also be provided to drive the turbine generator.

[0011] In certain illustrative embodiments, the electric motor can be an AC permanent magnet motor and/or a variable speed motor. The electric motor can be capable of operation in the range of up to 1500 rpms and up to 20,000 ft/lbs of torque. The pump can be a triplex or quintiplex plunger style fluid pump.

[0012] In certain illustrative embodiments, the method can further comprise the steps of: providing an electric blender module continuous and/or operatively associated with the fluid pump, the blender module comprising: a fluid source, a fluid additive source, and a centrifugal blender tub, and supplying electric power from the dedicated source to the blender module to effect blending of the fluid with fluid additives to generate the treatment fluid.

[0013] In accordance with another aspect of the disclosed subject matter, a system for use in delivering pressurized fluid to a wellbore is provided. The system can comprise: a well site comprising a wellbore and a dedicated source of electricity; an electrically powered fracturing module operatively associated with the dedicated source of electricity, the electrically powered fracturing module comprising an electric motor and a fluid pump coupled to the electric motor; a source of treatment fluid, wherein the treatment fluid can be continuous with the fluid pump and with the wellbore; and a control system for regulating the fracturing module in delivery of treatment fluid from the treatment fluid source to the wellbore.

[0014] In certain illustrative embodiments, the source of treatment fluid can comprise an electrically powered blender module operatively associated with the dedicated source of electricity. The system can further comprise a fracturing trailer at the well site for housing one or more fracturing modules. Each fracturing module can be adapted for removable mounting on the trailer. The system can further comprise a replacement pumping module comprising a pump and an electric motor, the replacement pumping module adapted for

removable mounting on the trailer. In certain illustrative embodiments, the replacement pumping module can be a nitrogen pumping module, or a carbon dioxide pumping module. The replacement pumping module can be, for example, a high torque, low rate motor or a low torque, high rate motor.

[0015] In accordance with another aspect of the disclosed subject matter, a fracturing module for use in delivering pressurized fluid to a wellbore is provided. The fracturing module can comprise: an AC permanent magnet motor capable of operation in the range of up to 1500 rpms and up to 20,000 ft/lbs of torque; and a plunger-style fluid pump coupled to the motor.

[0016] In accordance with another aspect of the disclosed subject matter, a method of blending a fracturing fluid for delivery to a wellbore to be fractured is provided. A dedicated source of electric power can be provided at a site containing a wellbore to be fractured. At least one electric blender module can be provided at the site. The electric blender module can include a fluid source, a fluid additive source, and a blender tub. Electric power can be supplied from the dedicated source to the electric blender module to effect blending of a fluid from the fluid source with a fluid additive from the fluid additive source to generate the fracturing fluid. The dedicated source of electrical power can be a turbine generator. A source of natural gas can be provided, wherein the natural gas is used to drive the turbine generator in the production of electrical power. The fluid from the fluid source can be blended with the fluid additive from the fluid additive source in the blender tub. The electric blender module can also include at least one electric motor that is operatively associated with the dedicated source of electric power and that effects blending of the fluid from the fluid source with the fluid additive from the fluid additive source.

[0017] In certain illustrative embodiments, the electric blender module can include a first electric motor and a second electric motor, each of which is operatively associated with the dedicated source of electric power. The first electric motor can effect delivery of the fluid from the fluid source to the blending tub. The second electric motor can effect blending of the fluid from the fluid source with the fluid additive from the fluid additive source in the blending tub. In certain illustrative embodiments, an optional third electric motor may also be present, that can also be operatively associated with the dedicated source of electric power. The third electric motor can effect delivery of the fluid additive from the fluid additive source to the blending tub.

[0018] In certain illustrative embodiments, the electric blender module can include a first blender unit and a second blender unit, each disposed adjacent to the other on the blender module and each capable of independent operation, or collectively capable of cooperative operation, as desired. The first blender unit and the second blender unit can each include a fluid source, a fluid additive source, and a blender tub. The first blender unit and the second blender unit can each have at least one electric motor that is operatively associated with the dedicated source of electric power and that effects blending of the fluid from the fluid source with the fluid additive from the fluid additive source. Alternatively, the first blender unit and the second blender unit can each have a first electric motor and a second electric motor, both operatively associated with the dedicated source of electric power, wherein the first electric motor effects delivery of the fluid from the fluid source to the blending tub and the second electric motor effects blending of the fluid from the fluid source with the fluid additive from the fluid additive source in the blending tub. In certain illustrative embodiments, the first blender unit and the second blender unit can each also have a third electric motor operatively associated with the dedicated source of electric power, wherein the third electric motor effects delivery of the fluid additive from the fluid additive source to the blending tub.

[0019] In accordance with another aspect of the disclosed subject matter, an electric blender module for use in delivering a blended fracturing fluid to a wellbore is provided. The electric blender module can include a first electrically driven blender unit and a first inlet manifold coupled to the first electrically driven blender unit and capable of delivering an unblended fracturing fluid thereto. A first outlet manifold can be coupled to the first electrically driven blender unit and can be capable of delivering the blended fracturing fluid away therefrom. A second electrically driven blender unit can be provided. A second inlet manifold can be coupled to the second electrically driven blender unit and capable of delivering the unblended fracturing fluid thereto. A second outlet manifold can be coupled to the second electrically driven blender unit and can be capable of delivering the blended fracturing fluid away therefrom. An inlet crossing line can be coupled to both the first inlet manifold and the second inlet manifold and can be capable of delivering the unblended fracturing fluid therebetween. An outlet crossing line can be coupled to both the first outlet manifold and the second outlet manifold and can be capable of delivering the blended fracturing fluid therebetween. A skid can be provided for housing the first electrically driven blender unit, the first inlet manifold, the second electrically driven blender unit, and the second inlet manifold.

[0020] Other aspects and features of the present invention will become apparent to those of ordinary skill in the art upon review of the following detailed description in conjunction with the accompanying figures.

BRIEF DESCRIPTION OF THE DRAWINGS

[0021] A better understanding of the presently disclosed subject matter can be obtained when the following detailed description is considered in conjunction with the following drawings, wherein:

[0022] FIG. **1** is a schematic plan view of a traditional fracturing site;

[0023] FIG. **2** is a schematic plan view of a fracturing site in accordance with certain illustrative embodiments described herein;

[0024] FIG. **3** is a schematic perspective view of a fracturing trailer in accordance with certain illustrative embodiments described herein;

[0025] FIG. **4**A is a schematic perspective view of a fracturing module in accordance with certain illustrative embodiments described herein;

[0026] FIG. **4**B is a schematic perspective view of a fracturing module with maintenance personnel in accordance with certain illustrative embodiments described herein;

[0027] FIG. **5**A is a schematic side view of a blender module in accordance with certain illustrative embodiments described herein;

[0028] FIG. **5**B is an end view of the blender module shown in FIG. **4**A;

[0029] FIG. **5**C is a schematic top view of a blender module in accordance with certain illustrative embodiments described herein;

[0030] FIG. **5**D is a schematic side view of the blender module shown in FIG. **5**C;

[0031] FIG. **5**E is a schematic perspective view of the blender module shown in FIG. **5**C;

[0032] FIG. **6** is a schematic top view of an inlet manifold for a blender module in accordance with certain illustrative embodiments described herein; and

[0033] FIG. **7** is a schematic top view of an outlet manifold for a blender module in accordance with certain illustrative embodiments described herein.

DETAILED DESCRIPTION

[0034] The presently disclosed subject matter generally relates to an electrically powered fracturing system and a system and method for providing on-site electrical power and delivering fracturing fluid to a wellbore at a fracturing operation.

[0035] In a conventional fracturing operation, a "slurry" of fluids and additives is injected into a hydrocarbon bearing rock formation at a wellbore to propagate fracturing. Low pressure fluids are mixed with chemicals, sand, and, if necessary, acid, and then transferred at medium pressure and high rate to vertical and/or deviated portions of the wellbore via multiple high pressure, plunger style pumps driven by diesel fueled prime movers. The majority of the fluids injected will be flowed back through the wellbore and recovered, while the sand will remain in the newly created fracture, thus "propping" it open and providing a permeable membrane for hydrocarbon fluids and gases to flow through so they may be recovered.

[0036] According to the illustrative embodiments described herein, natural gas (either supplied to the site or produced on-site) can be used to drive a dedicated source of electrical power, such as a turbine generator, for hydrocarbon-producing wellbore completions. A scalable, electrically powered fracturing fleet is provided to deliver pressurized treatment fluid, such as fracturing fluid, to a wellbore in a fracturing operation, obviating the need for a constant supply of diesel fuel to the site and reducing the site footprint and infrastructure required for the fracturing operation, when compared with conventional operations. The treatment fluid provided for pressurized delivery to the wellbore can be continuous with the wellbore and with one or more components of the fracturing fleet, in certain illustrative embodiments. In these embodiments, continuous generally means that downhole hydrodynamics are dependent upon constant flow (rate and pressure) of the delivered fluids, and that there should not be any interruption in fluid flow during delivery to the wellbore if the fracture is to propagate as desired. However, it should not be interpreted to mean that operations of the fracturing fleet cannot generally be stopped and started, as would be understood by one of ordinary skill in the art.

[0037] With reference to FIG. **1**, a site plan for a traditional fracturing operation on an onshore site is shown. Multiple trailers **5** are provided, each having at least one diesel tank mounted or otherwise disposed thereon. Each trailer **5** is attached to a truck **6** to permit refueling of the diesel tanks as required. Trucks **6** and trailers **5** are located within region A on the fracturing site. Each truck **6** requires a dedicated operator. One or more prime movers are fueled by the diesel and are used to power the fracturing operation. One or more separate chemical handling skids **7** are provided for housing of blending tanks and related equipment.

[0038] With reference to FIG. **2**, an illustrative embodiment of a site plan for an electrically powered fracturing operation on a onshore site is shown. The fracturing operation includes one or more trailers **10**, each housing one or more fracturing modules **20** (see FIG. **3**). Trailers **10** are located in region B on the fracturing site. One or more natural gas-powered turbine generators **30** are located in region C on the site, which is located a remote distance D from region B where the trailers **10** and fracturing modules **20** are located, for safety reasons. Turbine generators **30** replace the diesel prime movers utilized in the site plan of FIG. **1**. Turbine generators **30** provide a dedicated source of electric power on-site. There is preferably a physical separation between the natural gas-based power generation in region C and the fracturing operation and wellbore located in region B. The natural gas-based power generation can require greater safety precautions than the fracturing operation and wellhead. Accordingly, security measures can be taken in region C to limit access to this more hazardous location, while maintaining separate safety standards in region B where the majority of site personnel are typically located. Further, the natural gas powered supply of electricity can be monitored and regulated remotely such that, if desired, no personnel are required to be within region C during operation.

[0039] Notably, the setup of FIG. **2** requires significantly less infrastructure than the setup shown in FIG. **1**, while providing comparable pumping capacity. Fewer trailers **10** are present in region B of FIG. **2** than the trucks **6** and trailers **5** in region A of FIG. **1**, due to the lack of need for a constant diesel fuel supply. Further, each trailer **10** in FIG. **2** does not need a dedicated truck **6** and operator as in FIG. **1**. Fewer chemical handling skids **7** are required in region B of FIG. **2** than in region A of FIG. **1**, as the skids **7** in FIG. **2** can be electrically powered. Also, by removing diesel prime movers, all associated machinery necessary for power transfer can be eliminated, such as the transmission, torque converter, clutch, drive shaft, hydraulic system, etc. . . . , and the need for cooling systems, including circulating pumps and fluids, is significantly reduced. In an illustrative embodiment, the physical footprint of the on-site area in region B of FIG. **2** is about 80% less than the footprint for the conventional system in region A of FIG. **1**.

[0040] With reference to the illustrative embodiments of FIG. **3**, trailer **10** for housing one or more fracturing modules **20** is shown. Trailer **10** can also be a skid, in certain illustrative embodiments. Each fracturing module **20** can include an electric motor **21** and a fluid pump **22** coupled thereto. During fracturing, fracturing module **20** is operatively associated with turbine generator **30** to receive electric power therefrom. In certain illustrative embodiments, a plurality of electric motors **21** and pumps **22** can be transported on a single trailer **10**. In the illustrative embodiments of FIG. **3**, four electric motors **21** and pumps **22** are transported on a single trailer **10**. Each electric motor **21** is paired to a pump **22** as a single fracturing module **20**. Each fracturing module **20** can be removably mounted to trailer **10** to facilitate ease of replacement as necessary. Fracturing modules **20** utilize electric power from turbine generator **30** to pump the fracturing fluid directly to the wellbore.

[0041] Electrical Power Generation

[0042] The use of a turbine to directly drive a pump has been previously explored. In such systems, a transmission is used to regulate turbine power to the pump to allow for speed and torque control. In the present operation, natural gas is

instead used to drive a dedicated power source in the production of electricity. In illustrative embodiments, the dedicated power source is an on-site turbine generator. The need for a transmission is eliminated, and generated electricity can be used to power the fracturing modules, blenders, and other on-site operations as necessary.

[0043] Grid power may be accessible on-site in certain fracturing operations, but the use of a dedicated power source is preferred. During startup of a fracturing operation, massive amounts of power are required such that the use of grid power would be impractical. Natural gas powered generators are more suitable for this application based on the likely availability of natural gas on-site and the capacity of natural gas generators for producing large amounts of power. Notably, the potential for very large instantaneous adjustments in power drawn from the grid during a fracturing operation could jeopardize the stability and reliability of the grid power system. Accordingly, a site-generated and dedicated source of electricity provides a more feasible solution in powering an electric fracturing system. In addition, a dedicated on-site operation can be used to provide power to operate other local equipment, including coiled tubing systems, service rigs, etc. . . .

[0044] In an illustrative embodiment, a single natural gas powered turbine generator **30**, as housed in a restricted area C of FIG. **2**, can generate sufficient power (for example 31 MW at 13,800 volts AC power) to supply several electric motors **21** and pumps **22**, avoiding the current need to deliver and operate each fluid pump from a separate diesel-powered truck. A turbine suitable for this purpose is a TM2500+ turbine generator sold by General Electric. Other generation packages could be supplied by Pratt & Whitney or Kawasaki for example. Multiple options are available for turbine power generation, depending on the amount of electricity required. In an illustrative embodiment, liquid fuels such as condensate can also be provided to drive turbine generator **30** instead of, or in addition to, natural gas. Condensate is less expensive than diesel fuels, thus reducing operational costs.

[0045] Fracturing Module

[0046] With reference to FIGS. **4**A and **4**B, an illustrative embodiment of fracturing module **20** is provided. Fracturing module **20** can include an electric motor **21** coupled to one or more electric pumps **22**, in certain illustrative embodiments. A suitable pump is a quintiplex or triplex plunger style pump, for example, the SWGS-2500 Well Service Pump sold by Gardner Denver, Inc.

[0047] Electric motor **21** is operatively associated with turbine generator **30**, in certain embodiments. Typically, each fracturing module **20** will be associated with a drive housing for controlling electric motor **21** and pumps **22**, as well as an electrical transformer and drive unit **50** (see FIG. **3**) to step down the voltage of the power from turbine generator **30** to a voltage appropriate for electric motor **21**. The electrical transformer and drive unit **50** can be provided as an independent unit for association with fracturing module **20**, or can be permanently fixed to the trailer **10**, in various embodiments. If permanently fixed, then transformer and drive unit **50** can be scalable to allow addition or subtraction of pumps **22** or other components to accommodate any operational requirements.

[0048] Each pump **22** and electric motor **21** are modular in nature so as to simplify removal and replacement from fracturing module **20** for maintenance purposes. Removal of a single fracturing module **20** from trailer **10** is also simplified. For example, any fracturing module **20** can be unplugged and unpinned from trailer **10** and removed, and another fracturing module **20** can be installed in its place in a matter of minutes.

[0049] In the illustrative embodiment of FIG. **3**, trailer **10** can house four fracturing modules **20**, along with a transformer and drive unit **50**. In this particular configuration, each single trailer **10** provides more pumping capacity than four of the traditional diesel powered fracturing trailers **5** of FIG. **1**, as parasitic losses are minimal in the electric fracturing system compared to the parasitic losses typical of diesel fueled systems. For example, a conventional diesel powered fluid pump is rated for 2250 hp. However, due to parasitic losses in the transmission, torque converter and cooling systems, diesel fueled systems typically only provide 1800 hp to the pumps. In contrast, the present system can deliver a true 2500 hp directly to each pump **22** because pump **22** is directly coupled to electric motor **21**. Further, the nominal weight of a conventional fluid pump is up to 120,000 lbs. In the present operation, each fracturing module **20** weighs approximately 28,000 lbs., thus allowing for placement of four pumps **22** in the same physical dimension (size and weight) as the spacing needed for a single pump in conventional diesel systems, as well as allowing for up to 10,000 hp total to the pumps. In other embodiments, more or fewer fracturing modules **20** may be located on trailer **10** as desired or required for operational purposes.

[0050] In certain illustrative embodiments, fracturing module **20** can include a electric motor **21** that is an AC permanent magnet motor capable of operation in the range of up to 1500 rpms and up to 20,000 ft/lbs of torque. Fracturing module **20** can also include a pump **22** that is a plunger-style fluid pump coupled to electric motor **21**. In certain illustrative embodiments, fracturing module **20** can have dimensions of approximately 136" width×108" length×100" height. These dimensions would allow fracturing module **20** to be easily portable and fit with a ISO intermodal container for shipping purposes without the need for disassembly. Standard sized ISO container lengths are typically 20', 40' or 53'. In certain illustrative embodiments, fracturing module **20** can have dimensions of no greater than 136" width×108" length×100" height. These dimensions for fracturing module **20** would also allow crew members to easily fit within the confines of fracturing module **20** to make repairs, as illustrated in FIG. **4***b*. In certain illustrative embodiments, fracturing module **20** can have a width of no greater than 102" to fall within shipping configurations and road restrictions. In a specific embodiment, fracturing module **20** is capable of operating at 2500 hp while still having the above specified dimensions and meeting the above mentioned specifications for rpms and ft/lbs of torque.

[0051] Electric Motor

[0052] With reference to the illustrative embodiments of FIGS. **2** and **3**, a medium low voltage AC permanent magnet electric motor **21** receives electric power from turbine generator **30**, and is coupled directly to pump **22**. In order to ensure suitability for use in fracturing, electric motor **21** should be capable of operation up to 1,500 rpm with a torque of up to 20,000 ft/lbs, in certain illustrative embodiments. A motor suitable for this purpose is sold under the trademark TeraTorq® and is available from Comprehensive Power, Inc. of Marlborough, Mass. A compact motor of sufficient torque will allow the number of fracturing modules **20** placed on each trailer **10** to be maximized.

[0053] Blender

[0054] For greater efficiency, conventional diesel powered blenders and chemical addition units can be replaced with

electrically powered blender units. In certain illustrative embodiments as described herein, the electrically powered blender units can be modular in nature for housing on trailer **10** in place of fracturing module **20**, or housed independently for association with each trailer **10**. An electric blending operation permits greater accuracy and control of fracturing fluid additives. Further, the centrifugal blender tubs typically used with blending trailers to blend fluids with proppant, sand, chemicals, acid, etc. . . . prior to delivery to the wellbore are a common source of maintenance costs in traditional fracturing operations.

[0055] With reference to FIGS. **5**A-**5**E and FIGS. **6**-**7**, illustrative embodiments of a blender module **40** and components thereof are provided. Blender module **40** can be operatively associated with turbine generator **30** and capable of providing fractioning fluid to pump **22** for delivery to the wellbore. In certain embodiments, blender module **40** can include at least one fluid additive source **44**, at least one fluid source **48**, and at least one centrifugal blender tub **46**. Electric power can be supplied from turbine generator **30** to blender module **40** to effect blending of a fluid from fluid source **48** with a fluid additive from fluid additive source **44** to generate the fracturing fluid. In certain embodiments, the fluid from fluid source **48** can be, for example, water, oils or methanol blends, and the fluid additive from fluid additive source **44** can be, for example, friction reducers, gellents, gellent breakers or biocides.

[0056] In certain illustrative embodiments, blender module **40** can have a dual configuration, with a first blender unit **47***a* and a second blender unit **47***b* positioned adjacent to each other. This dual configuration is designed to provide redundancy and to facilitate access for maintenance and replacement of components as needed. In certain embodiments, each blender unit **47***a* and **47***b* can have its own electrically-powered suction and tub motors disposed thereon, and optionally, other electrically-powered motors can be utilized for chemical additional and/or other ancillary operational functions, as discussed further herein.

[0057] For example, in certain illustrative embodiments, first blender unit **47***a* can have a plurality of electric motors including a first electric motor **43***a* and a second electric motor **41***a* that are used to drive various components of blender module **40**. Electric motors **41***a* and **43***a* can be powered by turbine generator **30**. Fluid can be pumped into blender module **40** through an inlet manifold **48***a* by first electric motor **43***a* and added to tub **46***a*. Thus, first electric motor **43***a* acts as a suction motor. Second electric motor **41***a* can drive the centrifugal blending process in tub **46***a*. Second electric motor **41***a* can also drive the delivery of blended fluid out of blender module **40** and to the wellbore via an outlet manifold **49***a*. Thus, second electric motor **41***a* acts as a tub motor and a discharge motor. In certain illustrative embodiments, a third electric motor **42***a* can also be provided. Third electric motor **42***a* can also be powered by turbine generator **30**, and can power delivery of fluid additives to blender **46***a*. For example, proppant from a hopper **44***a* can be delivered to a blender tub **46***a*, for example, a centrifugal blender tub, by an auger **45***a*, which is powered by third electric motor **42***a*.

[0058] Similarly, in certain illustrative embodiments, second blender unit **47***b* can have a plurality of electric motors including a first electric motor **43***b* and a second electric motor **41***b* that are used to drive various components of blender module **40**. Electric motors **41***b* and **43***b* can be powered by turbine generator **30**. Fluid can be pumped into blender module **40** through an inlet manifold **48***b* by first electric motor **43***b* and added to tub **46***b*. Thus, second electric motor **43***a* acts as a suction motor. Second electric motor **41***b* can drive the centrifugal blending process in tub **46***b*. Second electric motor **41***b* can also drive the delivery of blended fluid out of blender module **40** and to the wellbore via an outlet manifold **49***b*. Thus, second electric motor **41***b* acts as a tub motor and a discharge motor. In certain illustrative embodiments, a third electric motor **42***b* can also be provided. Third electric motor **42***b* can also be powered by turbine generator **30**, and can power delivery of fluid additives to blender **46***b*. For example, proppant from a hopper **44***b* can be delivered to a blender tub **46***b*, for example, a centrifugal blender tub, by an auger **45***b*, which is powered by third electric motor **42***b*.

[0059] Blender module **40** can also include a control cabin **53** for housing equipment controls for first blender unit **47***a* and second blender unit **47***b*, and can further include appropriate drives and coolers as required.

[0060] Conventional blenders powered by a diesel hydraulic system are typically housed on a forty-five foot tractor trailer and are capable of approximately 100 bbl/min. In contrast, the dual configuration of blender module **40** having first blender unit **47***a* and second blender unit **47***b* can provide a total output capability of 240 bbl/min in the same physical footprint as a conventional blender, without the need for a separate backup unit in case of failure.

[0061] Redundant system blenders have been tried in the past with limited success, mostly due to problems with balancing weights of the trailers while still delivering the appropriate amount of power. Typically, two separate engines, each approximately 650 hp, have been mounted side by side on the nose of the trailer. In order to run all of the necessary systems, each engine must drive a mixing tub via a transmission, drop box and extended drive shaft. A large hydraulic system is also fitted to each engine to run all auxiliary systems such as chemical additions and suction pumps. Parasitic power losses are very large and the hosing and wiring is complex.

[0062] In contrast, the electric powered blender module **40** described in certain illustrative embodiments herein can relieve the parasitic power losses of conventional systems by direct driving each piece of critical equipment with a dedicated electric motor. Further, the electric powered blender module **40** described in certain illustrative embodiments herein allows for plumbing routes that are unavailable in conventional applications. For example, in certain illustrative embodiments, the fluid source can be an inlet manifold **48** that can have one or more inlet crossing lines **50** (see FIG. **7**) that connect the section of inlet manifold **48** dedicated to delivering fluid to first blender unit **47***a* with the section of inlet manifold **48** dedicated to delivering fluid to second blender unit **47***b*. Similarly, in certain illustrative embodiments, outlet manifold **49** can have one or more outlet crossing lines **51** (see FIG. **6**) that connect the section of outlet manifold **49** dedicated to delivering fluid from first blender unit **47***a* with the section of outlet manifold **49** dedicated to delivering fluid from second blender unit **47***b*. Crossing lines **50** and **51** allow flow to be routed or diverted between first blender unit **47***a* and second blender unit **47***b*. Thus, blender module **40** can mix from either side, or both sides, and/or discharge to either side, or both sides, if necessary. As a result, the attainable rates for the electric powered blender module **40** are much larger that of a conventional blender. In certain illustrative embodiments, each side (i.e., first blender unit **47***a* and second blender unit **47***b*) of blender module **40** is capable of

approximately 120 bbl/min. Also, each side (i.e., first blender unit **47***a* and second blender unit **47***b*) can move approximately 15 t/min of sand, at least in part because the length of auger **45** is shorter (approximately 6') as compared to conventional units (approximately 12').

[0063] In certain illustrative embodiments, blender module **40** can be scaled down or "downsized" to a single, compact module comparable in size and dimensions to fracturing module **20** described herein. For smaller fracturing or treatment jobs requiring fewer than four fracturing modules **20**, a downsized blender module **40** can replace one of the fracturing modules **20** on trailer **10**, thus reducing operational costs and improving transportability of the system.

[0064] Control System

[0065] A control system can be provided for regulating various equipment and systems within the electric powered fractioning operation. For example, in certain illustrative embodiments, the control system can regulate fracturing module **20** in delivery of treatment fluid from blender module **30** to pumps **22** for delivery to the wellbore. Controls for the electric-powered operation described herein are a significant improvement over that of conventional diesel powered systems. Because electric motors are controlled by variable frequency drives, absolute control of all equipment on location can be maintained from one central point. When the system operator sets a maximum pressure for the treatment, the control software and variable frequency drives calculate a maximum current available to the motors. Variable frequency drives essentially "tell" the motors what they are allowed to do.

[0066] Electric motors controlled via variable frequency drive are far safer and easier to control than conventional diesel powered equipment. For example, conventional fleets with diesel powered pumps utilize an electronically controlled transmission and engine on the unit. There can be up to fourteen different parameters that need to be monitored and controlled for proper operation. These signals are typically sent via hardwired cable to an operator console controlled by the pump driver. The signals are converted from digital to analog so the inputs can be made via switches and control knobs. The inputs are then converted from analog back to digital and sent back to the unit. The control module on the unit then tells the engine or transmission to perform the required task and the signal is converted to a mechanical operation. This process takes time.

[0067] Accidental over-pressures are quite common in these conventional operations, as the signal must travel to the console, back to the unit and then perform a mechanical function. Over-pressures can occur in milliseconds due to the nature of the operations. These are usually due to human error, and can be as simple as a single operator failing to react to a command. They are often due to a valve being closed, which accidentally creates a "deadhead" situation.

[0068] For example, in January of 2011, a large scale fractioning operation was taking place in the Horn River Basin of north-eastern British Columbia, Canada. A leak occurred in one of the lines and a shutdown order was given. The master valve on the wellhead was then closed remotely. Unfortunately, multiple pumps were still rolling and a system overpressure ensued. Treating iron rated for 10,000 psi was taken to well over 15,000 psi. A line attached to the well also separated, causing it to whip around. The incident caused a shutdown interruption to the entire operation for over a week while investigation and damage assessment were performed.

[0069] The control system provided according to the present illustrative embodiments, being electrically powered, virtually eliminates these types of scenarios from occurring. A maximum pressure value set at the beginning of the operation is the maximum amount of power that can be sent to electric motor **21** for pump **22**. By extrapolating a maximum current value from this input, electric motor **21** does not have the available power to exceed its operating pressure. Also, because there are virtually no mechanical systems between pump **22** and electric motor **21**, there is far less "moment of inertia" of gears and clutches to deal with. A near instantaneous stop of electric motor **21** results in a near instantaneous stop of pump **22**.

[0070] An electrically powered and controlled system as described herein greatly increases the ease in which all equipment can be synced or slaved to each other. This means a change at one single point will be carried out by all pieces of equipment, unlike with diesel equipment. For example, in conventional diesel powered operations, the blender typically supplies all the necessary fluids to the entire system. In order to perform a rate change to the operation, the blender must change rate prior to the pumps changing rates. This can often result in accidental overflow of the blender tubs and/or cavitation of the pumps due to the time lag of each piece of equipment being given manual commands.

[0071] In contrast, the present operation utilizes a single point control that is not linked solely to blender operations, in certain illustrative embodiments. All operation parameters can be input prior to beginning the fractioning. If a rate change is required, the system will increase the rate of the entire system with a single command. This means that if pumps **22** are told to increase rate, then blender module **40** along with the chemical units and even ancillary equipment like sand belts will increase rates to compensate automatically.

[0072] Suitable controls and computer monitoring for the entire fracturing operation can take place at a single central location, which facilitates adherence to pre-set safety parameters. For example, a control center **40** is indicated in FIG. **2** from which operations can be managed via communications link **41**. Examples of operations that can be controlled and monitored remotely from control center **40** via communications link **41** can be the power generation function in Area B, or the delivery of treatment fluid from blender module **40** to pumps **22** for delivery to the wellbore.

Comparison Example

[0073] Table 1, shown below, compares and contrasts the operational costs and manpower requirements for a conventional diesel powered operation (such as shown in FIG. **1**) with those of a electric powered operation (such as shown in FIG. **2**).

TABLE 1

Comparison of Conventional Diesel Powered Operation vs. Electric Powered Operation

Diesel Powered Operation	Electric Powered Operation
Total fuel cost (diesel) - about $80,000 per day	Total fuel cost (natural gas) - about $2,300 per day
Service interval for diesel engines - about every 200-300 hours	Service interval for electric motor - about every 50,000 hours

TABLE 1-continued

Comparison of Conventional Diesel Powered Operation vs. Electric Powered Operation	
Diesel Powered Operation	Electric Powered Operation
Dedicated crew size - about 40 people	Dedicated crew size - about 10 people

[0074] In Table 1, the "Diesel Powered Operation" utilizes at least 24 pumps and 2 blenders, and requires at least 54,000 hp to execute the fracturing program on that location. Each pump burns approximately 300-400 liters per hour of operation, and the blender units burn a comparable amount of diesel fuel. Because of the fuel consumption and fuel capacity of this conventional unit, it requires refueling during operation, which is extremely dangerous and presents a fire hazard. Further, each piece of conventional equipment needs a dedicated tractor to move it and a driver/operator to run it. The crew size required to operate and maintain a conventional operation such as the one in FIG. **1** represents a direct cost for the site operator.

[0075] In contrast, the electric powered operation as described herein utilizes a turbine that only consumes about 6 mm scf of natural gas per 24 hours. At current market rates (approximately $2.50 per mmbtu), this equates to a reduction in direct cost to the site operator of over $77,000 per day compared to the diesel powered operation. Also, the service interval on electric motors is about 50,000 hours, which allows the majority of reliability and maintainability costs to disappear. Further, the need for multiple drivers/operators is reduced significantly, and electric powered operation means that a single operator can run the entire system from a central location. Crew size can be reduced by around 75%, as only about 10 people are needed on the same location to accomplish the same tasks as conventional operations, with the people including off-site personnel maintenance personnel. Further, crew size does not change with the amount of equipment used. Thus, the electric powered operation is significantly more economical.

[0076] Modular Design and Alternate Embodiments

[0077] As discussed above, the modular nature of the electric powered fracturing operation described herein provides significant operational advantages and efficiencies over traditional fracturing systems. Each fracturing module **20** sits on trailer **10** which houses the necessary mounts and manifold systems for low pressure suctions and high pressure discharges. Each fracturing module **20** can be removed from service and replaced without shutting down or compromising the fractioning spread. For instance, pump **22** can be isolated from trailer **10**, removed and replaced by a new pump **22** in just a few minutes. If fracturing module **20** requires service, it can be isolated from the fluid lines, unplugged, un-pinned and removed by a forklift. Another fracturing module **20** can be then re-inserted in the same fashion, realizing a drastic time savings. In addition, the removed fracturing module **20** can be repaired or serviced in the field. In contrast, if one of the pumps in a conventional diesel powered system goes down or requires service, the tractor/trailer combination needs to be disconnected from the manifold system and driven out of the location. A replacement unit must then be backed into the line and reconnected. Maneuvering these units in these tight confines is difficult and dangerous.

[0078] The presently described electric powered fracturing operation can be easily adapted to accommodate additional types of pumping capabilities as needed. For example, a replacement pumping module can be provided that is adapted for removable mounting on trailer **10**. Replacement pumping module can be utilized for pumping liquid nitrogen, carbon dioxide, or other chemicals or fluids as needed, to increase the versatility of the system and broaden operational range and capacity. In a conventional system, if a nitrogen pump is required, a separate unit truck/trailer unit must be brought to the site and tied into the fractioning spread. In contrast, the presently described operation allows for a replacement nitrogen module with generally the same dimensions as fractioning module **20**, so that the replacement module can fit into the same slot on the trailer as fractioning module **20** would. Trailer **10** can contain all the necessary electrical power distributions as required for a nitrogen pump module so no modifications are required. The same concept would apply to carbon dioxide pump modules or any other pieces of equipment that would be required. Instead of another truck/trailer, a specialized replacement module can instead be utilized.

[0079] Natural gas is considered to be the cleanest, most efficient fuel source available. By designing and constructing "fit for purpose equipment" that is powered by natural gas, it is expected that the fracturing footprint, manpower, and maintenance requirements can each be reduced by over 60% when compared with traditional diesel-powered operations.

[0080] In addition, the presently described electric powered fracturing operation resolves or mitigates environmental impacts of traditional diesel-powered operations. For example, the presently described natural gas powered operation can provide a significant reduction in carbon dioxide emissions as compared to diesel-powered operations. In an illustrative embodiment, a fractioning site utilizing the presently described natural gas powered operation would have a carbon dioxide emissions level of about 2200 kg/hr, depending upon the quality of the fuel gas, which represents an approximately 200% reduction from carbon dioxide emissions of diesel-powered operations. Also, in an illustrative embodiment, the presently described natural gas powered operation would produces no greater than about 80 decibels of sound with a silencer package utilized on turbine **30**, which meets OSHA requirements for noise emissions. By comparison, a conventional diesel-powered fractioning pump running at full rpm emits about 105 decibels of sound. When multiple diesel-powered fractioning pumps are running simultaneously, noise is a significant hazard associated with conventional operations.

[0081] In certain illustrative embodiments, the electric-powered fractioning operation described herein can also be utilized for offshore oil and gas applications, for example, fracturing of a wellbore at an offshore site. Conventional offshore operations already possess the capacity to generate electric power on-site. These vessels are typically diesel over electric, which means that the diesel powerplant on the vessel generates electricity to meet all power requirements including propulsion. Conversion of offshore pumping services to run from an electrical power supply will allow transported diesel fuel to be used in power generation rather than to drive the fracturing operation, thus reducing diesel fuel consumption. The electric power generated from the offshore vessel's power plant (which is not needed during station keeping) can be utilized to power one or more fracturing modules **10**. This is far cleaner, safer and more efficient than using diesel pow-

ered equipment. Fracturing modules **10** are also smaller and lighter than the equipment typically used on the deck of offshore vessels, thus removing some of the current ballast issues and allowing more equipment or raw materials to be transported by the offshore vessels.

[0082] In a deck layout for a conventional offshore stimulation vessel, skid based, diesel powered pumping equipment and storage facilities on the deck of the vessel create ballast issues. Too much heavy equipment on the deck of the vessel causes the vessel to have higher center of gravity. Also, fuel lines must be run to each piece of equipment greatly increasing the risk of fuel spills. In illustrative embodiments of a deck layout for an offshore vessel utilizing electric-powered fractioning operations as described herein, the physical footprint of the equipment layout is reduced significantly when compared to the conventional layout. More free space is available on deck, and the weight of equipment is dramatically decreased, thus eliminating most of the ballast issues. A vessel already designed as diesel-electric can be utilized. When the vessel is on station at a platform and in station keeping mode, the vast majority of the power that the ship's engines are generating can be run up to the deck to power modules. The storage facilities on the vessel can be placed below deck, further lowering the center of gravity, while additional equipment, for instance, a 3-phase separator, or coiled tubing unit, can be provided on deck, which is difficult in existing diesel-powered vessels. These benefits, coupled with the electronic control system, gives a far greater advantage over conventional vessels.

[0083] While the present description has specifically contemplated a fracturing system, the system can be used to power pumps for other purposes, or to power other oilfield equipment. For example, high rate and pressure pumping equipment, hydraulic fracturing equipment, well stimulation pumping equipment and/or well servicing equipment could also be powered using the present system. In addition, the system can be adapted for use in other art fields requiring high torque or high rate pumping operations, such as pipeline cleaning or dewatering mines.

[0084] It is to be understood that the subject matter herein is not limited to the exact details of construction, operation, exact materials, or illustrative embodiments shown and described, as modifications and equivalents will be apparent to one skilled in the art. Accordingly, the subject matter is therefore to be limited only by the scope of the appended claims.

What is claimed is:

1. A method of delivering fracturing fluid to a wellbore, the method comprising the steps of:

providing a dedicated source of electric power at a site containing a wellbore to be fractured, wherein the dedicated source of electrical power is a turbine generator;

providing a source of natural gas, wherein the natural gas is used to drive the turbine generator in the production of electrical power;

providing one or more electric fracturing modules at the site, the electric fracturing modules comprising an electric motor and a coupled fluid pump, the electric motor operatively associated with the dedicated source of electric power;

providing the fracturing fluid for pressurized delivery to a wellbore;

operating the fracturing modules using electric power from the dedicated source to pump the fracturing fluid to the wellbore;

providing an electric blender module, the electric blender module comprising: a fluid source, a fluid additive source, and a blender tub;

providing a fracturing trailer at the site for housing the one or more fracturing modules and the electric blender module; and

supplying electric power from the dedicated source to the electric blender module to effect blending of a fluid from the fluid source with a fluid additive from the fluid additive source to generate the fracturing fluid.

2. A method of delivering fracturing fluid to a wellbore, the method comprising the steps of:

providing a dedicated source of electric power at a site containing a wellbore to be fractured;

providing one or more electric fracturing modules at the site, the electric fracturing module comprising an electric motor and a coupled fluid pump, the electric motor operatively associated with the dedicated source of electric power;

providing the fracturing fluid for pressurized delivery to a wellbore; and

operating the fracturing modules using electric power from the dedicated source to pump the fracturing fluid to the wellbore.

3. The method of claim **2**, wherein the dedicated source of electrical power is a turbine generator.

4. The method of claim **3**, further comprising the step of providing a source of natural gas, wherein the natural gas is used to drive the turbine generator in the production of electrical power.

5. The method of claim **2**, wherein the electric motor is an AC permanent magnet motor capable of operation in the range of up to 1500 rpms and up to 20,000 ft/lbs of torque.

6. The method of claim **2**, wherein the pump is a quintiplex plunger-style fluid pump.

7. The method of claim **2**, wherein the pump is a triplex plunger-style fluid pump.

8. The method of claim **2**, wherein the dedicated source of electric power is disposed at a remote location from the one or more electric fracturing modules.

9. The method of claim **2**, further comprising the steps of:

providing an electric blender module, the electric blender module comprising: a fluid source, a fluid additive source, and a blender tub; and

supplying electric power from the dedicated source to the electric blender module to effect blending of a fluid from the fluid source with a fluid additive from the fluid additive source to generate the fracturing fluid.

10. The method of claim **2**, wherein the site is an onshore site.

11. The method of claim **2**, wherein the site is an offshore site.

12. A method of fracturing a wellbore, the method comprising the steps of:

providing a dedicated source of electric power at a site containing the wellbore to be fractured;

providing at least one electric fracturing module at the site, the electric fracturing module comprising an electric motor and a coupled fluid pump, the electric motor operatively associated with the dedicated source of electric power;

providing a fracturing fluid for pressurized delivery to the wellbore; and

operating the fracturing modules using electric power from the dedicated source to pump the fracturing fluid to the wellbore; and

fracturing the wellbore with the fracturing fluid.

13. A method of providing electric power to at least one fracturing module at a wellbore, the method comprising the steps of:

providing a turbine generator at a site containing a wellbore to be fractured;

providing a source of natural gas, wherein the natural gas is used to drive the turbine generator in the production of electrical power;

providing the fracturing module at the site;

providing a fracturing fluid for pressurized delivery to the wellbore; and

operating the fracturing module using electric power from the turbine generator to pump the fracturing fluid to the wellbore.

14. A system for use in delivering pressurized fluid to a wellbore, the system comprising:

a well site comprising a wellbore and a dedicated source of electricity;

an electrically powered fracturing module operatively associated with the dedicated source of electricity, the electrically powered fracturing module comprising an electric motor and a fluid pump coupled to the electric motor;

an electrically powered blender module operatively associated with the dedicated source of electricity and capable of providing treatment fluid to the fluid pump for delivery to the wellbore;

a control system for regulating the fracturing module in delivery of treatment fluid from the electrically powered blender module to the fluid pump for delivery to the wellbore; and

a fracturing trailer at the well site for housing the electrically powered fracturing module and the electrically powered blender module.

15. A system for use in delivering pressurized fluid to a wellbore, the system comprising:

a well site comprising a wellbore and a dedicated source of electricity;

an electrically powered fracturing module operatively associated with the dedicated source of electricity, the electrically powered fracturing module comprising an electric motor and a fluid pump coupled to the electric motor;

a source of treatment fluid; and

a control system for regulating the fracturing module in delivery of treatment fluid from the source of treatment fluid to the wellbore.

16. The system of claim **15**, wherein the source of treatment fluid comprises an electrically powered blender module operatively associated with the dedicated source of electricity.

17. The system of claim **15**, further comprising a fracturing trailer at the well site for housing one or more fracturing modules.

18. The system of claim **15**, wherein the fracturing module is adapted for removable mounting on the trailer.

19. The system of claim **15**, further comprising a replacement pumping module comprising a pump and an electric motor, the replacement pumping module adapted for removable mounting on the trailer.

20. The system of claim **19**, wherein the replacement pumping module is a nitrogen pumping module.

21. The system of claim **19**, wherein the replacement pumping module is a carbon dioxide pumping module.

22. The system of claim **19**, wherein the replacement pumping module comprises a high torque, low rate motor.

23. The system of claim **19**, wherein the replacement pumping module comprises a low torque, high rate motor.

24. The system of claim **15**, wherein the dedicated source of electricity is disposed at a remote location from the electrically powered fracturing module.

25. The system of claim **15**, wherein the well site is an onshore site.

26. The system of claim **15**, wherein the well site is an offshore site and the dedicated source of electricity and the electrically powered fracturing module are located on an offshore vessel.

27. A fracturing module for use in delivering pressurized fluid to a wellbore, the fracturing module comprising:

an AC permanent magnet motor capable of operation in the range of up to 1500 rpms and up to 20,000 ft/lbs of torque; and

a plunger-style fluid pump coupled to the motor.

28. The fracturing module of claim **27**, wherein the fracturing module has dimensions of no greater than 136" width× 108" length×100" height and the AC permanent magnet motor is capable of operating at 2500 hp during fracturing operations.

29. The fracturing module of claim **27**, wherein the module is sized to fit within the dimensions of a ISO intermodal container.

30. The fracturing module of claim **27**, wherein the fracturing module operates at a sound level no greater than 80 decibels.

31. A method of blending a fracturing fluid for delivery to a wellbore to be fractured, the method comprising the steps of:

providing a dedicated source of electric power at a site containing a wellbore to be fractured;

providing at least one electric blender module at the site, the electric blender module comprising a fluid source, a fluid additive source, and a blender tub; and

supplying electric power from the dedicated source to the electric blender module to effect blending of a fluid from the fluid source with a fluid additive from the fluid additive source to generate the fracturing fluid.

32. The method of claim **31**, wherein the dedicated source of electrical power is a turbine generator, and further comprising the step of providing a source of natural gas, wherein the natural gas is used to drive the turbine generator in the production of electrical power.

33. The method of claim **31**, wherein the fluid from the fluid source is blended with the fluid additive from the fluid additive source in the blender tub.

34. The method of claim **31**, wherein the electric blender module further comprises at least one electric motor that is operatively associated with the dedicated source of electric power and that effects blending of the fluid from the fluid source with the fluid additive from the fluid additive source.

35. The method of claim **31**, wherein the electric blender module further comprises a first electric motor and a second electric motor, both operatively associated with the dedicated source of electric power, wherein the first electric motor effects delivery of the fluid from the fluid source to the blending tub and the second electric motor effects blending of the fluid from the fluid source with the fluid additive from the fluid additive source in the blending tub.

36. The method of claim **35**, wherein the electric blender module further comprises a third electric motor operatively associated with the dedicated source of electric power, wherein the third electric motor effects delivery of the fluid additive from the fluid additive source to the blending tub.

37. The method of claim **31**, wherein the electric blender module comprises a first blender unit and a second blender unit each disposed thereon, the first blender unit and the second blender unit each comprising a fluid source, a fluid additive source, and a blender tub.

38. The method of claim **37**, wherein the first blender unit and the second blender unit each comprise at least one electric motor that is operatively associated with the dedicated source of electric power and that effects blending of the fluid from the fluid source with the fluid additive from the fluid additive source.

39. The method of claim **37**, wherein the first blender unit and the second blender unit each comprise a first electric motor and a second electric motor, both operatively associated with the dedicated source of electric power, wherein the first electric motor effects delivery of the fluid from the fluid source to the blending tub and the second electric motor effects blending of the fluid from the fluid source with the fluid additive from the fluid additive source in the blending tub.

40. The method of claim **39**, wherein the first blender unit and the second blender unit each further comprise a third electric motor operatively associated with the dedicated source of electric power, wherein the third electric motor effects delivery of the fluid additive from the fluid additive source to the blending tub.

41. An electric blender module for use in delivering a blended fracturing fluid to a wellbore, the electric blender module comprising:

a first electrically driven blender unit;

a first inlet manifold coupled to the first electrically driven blender unit and capable of delivering an unblended fracturing fluid thereto;

a first outlet manifold coupled to the first electrically driven blender unit and capable of delivering the blended fracturing fluid away therefrom;

a second electrically driven blender unit;

a second inlet manifold coupled to the second electrically driven blender unit and capable of delivering the unblended fracturing fluid thereto;

a second outlet manifold coupled to the second electrically driven blender unit and capable of delivering the blended fracturing fluid away therefrom;

an inlet crossing line coupled to the first inlet manifold and the second inlet manifold and capable of delivering the unblended fracturing fluid therebetween; and

an outlet crossing line coupled to the first outlet manifold and the second outlet manifold and capable of delivering the blended fracturing fluid therebetween.

42. The electric blender module of claim **41**, further comprising a skid for housing the first electrically driven blender unit, the first inlet manifold, the second electrically driven blender unit, and the second inlet manifold.

* * * * *