Materials for pumps 7

7.1 Introduction
7.2 Typical materials
7.2.1 Grey cast iron
7.2.2 Spheroidal and nodular cast iron
7.2.3 Low alloy steel
7.2.4 Alloyed cast iron
7.2.4.1 Copper, (for flaked graphite cast iron only)
7.2.4.2 Nickel and chromium
7.2.4.3 Silicon
7.2.5 11-13% Cr steel
7.2.6 Stainless steel
7.2.7 Super stainless steel
7.2.8 Copper alloys
7.2.9 Aluminium alloys
7.2.10 Nickel alloys
7.2.11 Other metallic materials
7.2.11.1 Lead and lead alloys
7.2.11.2 Titanium
7.2.11.3 Tantalum
7.2.11.4 Tungsten carbide
7.2.12 Non-metallic materials
7.2.12.1 Thermoplastics
7.2.12.2 Thermosetting plastics
7.2.12.3 Elastomers
7.2.12.4 Ceramics
7.2.12.5 Minerals
7.2.13 Coatings
7.3 Material strength and integrity
7.4 Corrosion and erosion
7.4.1 Liquid corrosion of metals
7.4.2 Corrosion rate
7.4.3 Types of corrosion
7.4.3.1 Galvanic corrosion
7.4.3.2 Erosion-corrosion
7.4.4 Corrosion testing
7.5 Abrasion resistant materials
7.5.1 Pump selection
7.5.2 Hard metallic materials
7.5.3 Rubber cladding
7.6 Materials resistant to cavitation damage
7.7 Material selection
7.7.1 Basic information
7.7.2 Material combinations
7.7.3 Corrosion resistance
7.7.4 Corrosive effects of unknown materials
7.8 Conclusions
7.9 Useful references

LIBERTY EXHIBIT 1034, Page 233
This book belongs to Robert Durham (rdurham@thewaylabs.com)
Copyright Elsevier 2024

7.1 Introduction

Material losses from corrosion costs industry a fortune every year. This is equivalent to saying that the output from every fifth steelworks emerges in the form of rust. Steel can be considered as an unstable material. After millions of years existing as an iron oxide it spends most of its time trying to revert to its original state. The problem of pump materials is quite different from that of simple common rusting, because of the complex effects brought about by the pumped liquids themselves.

Since pumps are used in most processes, on-going process development creates new problems for which solutions based on experience do not yet exist. Examples of these are:

- The catalytic manufacture of sulphuric acid. The production rate has been increased by removing various cooling operations. Through this, the temperature rises by 50°C, which increases the material corrosion problems of the pump by a factor of three.
- Adding fluoric acid to chromic acid baths to improve the shine on chromium plated surfaces. The new acid mixture is much more corrosive than before.

Individual materials and combination of materials for pumps are determined by a number of interactive factors, see Figure 7.1. The end result is usually an inspired compromise between all of these, whilst at the same time, unfortunately, some of the factors may be more or less unknown quantities.

In Figure 7.1, "Manufacturing techniques" is a broad heading and includes some aspects which affect the useful life of a pump and the ability of the user to repair a pump. It is preferable to use materials which are easy to machine. If a material is so difficult to machine that "as cast" parts must be used then pump performance will normally be reduced. It is also better to use materials which can be welded.

Intricate components tend to be cast. Casting is not 100% successful. Provisions must be made to allow for approved repair methods. Welding is the most useful repair technique. Components made in materials which cannot be welded may have to be scrapped, increasing the overall cost. Pumps manufactured from materials which are difficult or impossible to weld will prove difficult or impossible to repair when faults occur in service. Some materials which can be welded should not be repaired by welding. This is controlled by the Quality Control (QC) Plan, see Chapter 12. Stationary materials in close proximity to moving materials must be compatible.

Attention must be paid to the "bearing" qualities of some materials, which may be affected by the liquid properties. In some cases, non-metallic materials in particular, process upset conditions can change the physical properties of the material. In these cases, pump design conditions should protect the integrity.

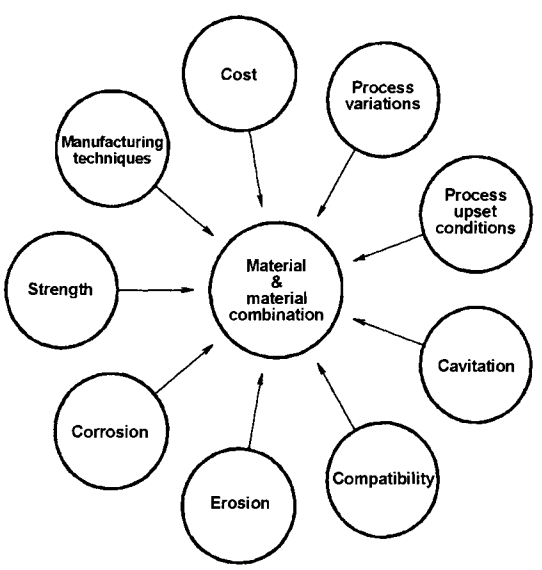

Figure 7.1 Factors affecting material suitability for pumps

The strength of materials can be judged by the allowable stress values given in pressure vessel codes. Local laws may specify a particular code to follow. ASME VIII and BS 5500 are popular and are specified as the limitation in many rotodynamic pump specifications. Pressure vessel stress levels are useless if components must be designed for fatigue resistance, as is the case with reciprocating pump cylinders for example. The fatigue endurance limit of the particular material, in contact with the particular liquid, will dictate the allowable stress levels.

When reviewing different specifications for materials it is important to consider materials which are "equivalent". General purpose materials may not be equivalent to materials specifically designated for pressure containment. Manufacturing methods can impart integrity which is not easily indicated by physical properties or chemical composition.

7.2 Typical materials

The majority of materials used currently in pumps can be classified within the following main groups:

- Material with iron as its main constituent
- Material with significant proportions of chrome and nickel
- Material with copper or aluminium as its main component
- Other metallic materials
- Non-metallic materials

The mechanical properties are defined in the usual way by the tensile strength and elongation. Sometimes there are other physical properties which are of interest such as impact resistance and hardness. The pump pressure rating PN, see also Section 7.3, is largely determined by the strength of materials and the temperature. For plastics at room temperatures as for metals at higher temperatures, the resistance to deformation must be considered. Creep resistance describes the effect of time under stress on permanent deformation.

Temperature plays an important part in the properties of solid materials. In general, as temperature increases materials become more elastic and deform more easily. This effect is reflected in the allowable stress which should be used for design

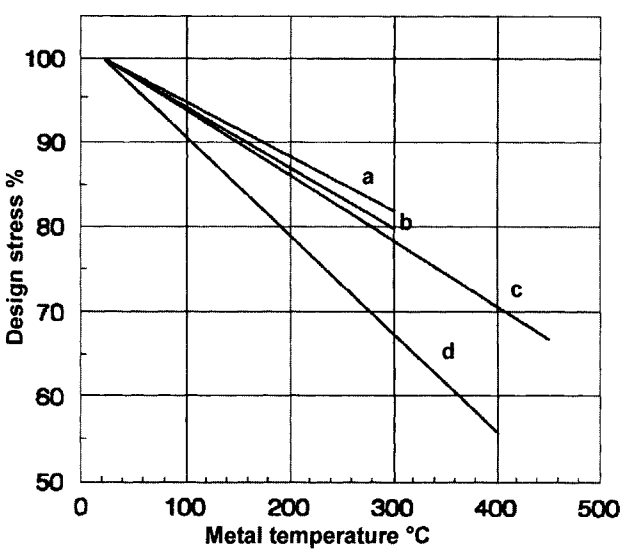

a = spheroidal graphite iron
b = grey cast iron
c = austenitic chrome iron
d = cast steel

Figure 7.2 Variation in material design stress with temperature

LIBERTY EXHIBIT 1034, Page 234
This book belongs to Robert Durham (rdurham@thewaylabs.com)
Copyright Elsevier 2024

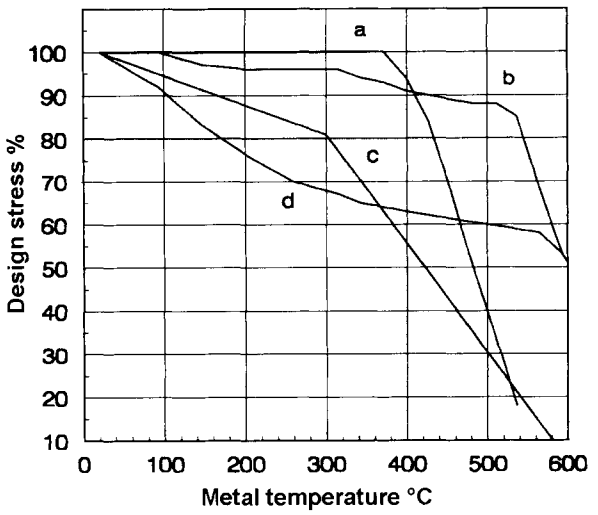

a = high tensile steel bolting (B7)
b = cast 18/8/2 austenitic stainless steel, large deformation
c = cast 11 - 13 Cr steel
d = cast 18/8/2 austenitic stainless steel, small deformation

Figure 7.3 Variation in material design stress with temperature

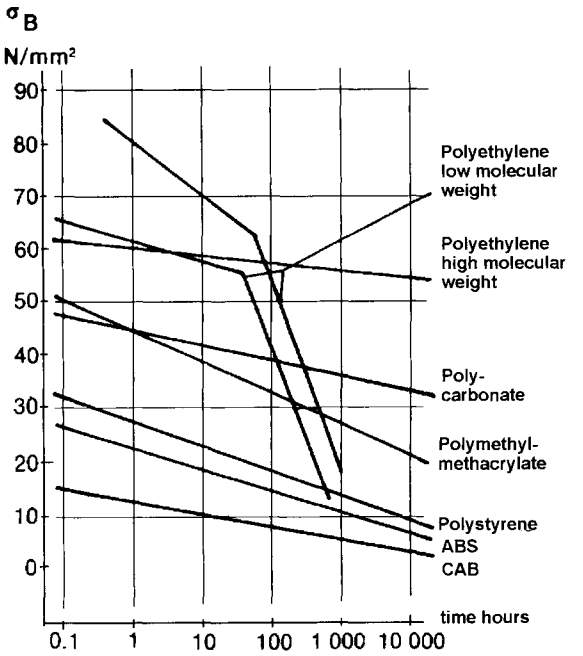

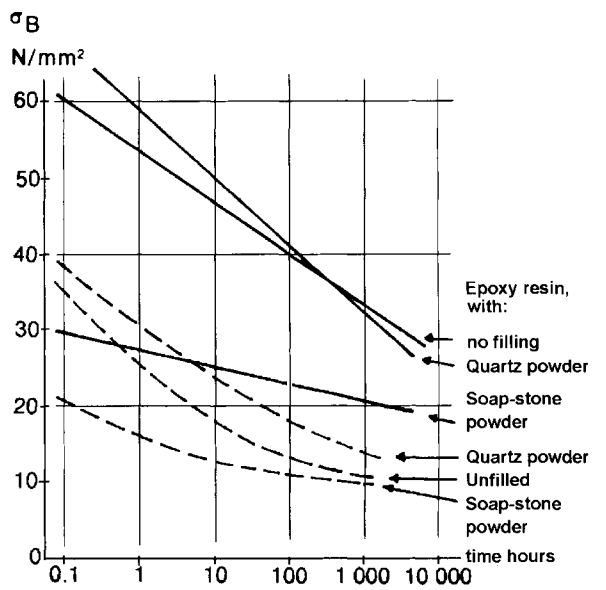

Figure 7.4 Creep of non-metallic materials
——— 23°C - - - - - - - - 60°C

purposes. Well-respected pressure vessel standards are a source of good information. Pumps are not pressure vessels; the pump casing or cylinder must do much more than just retain internal pressure. However the data in pressure vessel standards can be used for guidance on the temperature effects. Figures 7.2 and 7.3 are based on data published in ASME VIII and BS 5500.

Low temperature can be a problem. The definition of low temperature varies with material types. Most materials become brittle and become susceptible to shocks. Both extremes of the temperature range need effective consideration. Creep can be a problem with metals at high temperature. Creep can be a problem with non-metallic materials at relatively low temperatures, see Figure 7.4.

The tables presented in the subsequent sections, in some cases, show several material designations in one category. National and international standards are generally not identical for requirements of production and quality control. The designations quoted are extracted from other publications, such as ISO 7005, and must be treated with some caution. The decision as to the suitability of any material for a specific application rests with the design engineer responsible for product liability.

7.2.1 Grey cast iron

General purpose cast iron is manufactured in various strengths, BS 1452, Grades 180-300, the grades referring to the tensile strength. Cast iron specifically for pressure containing parts, ASTM A278, has similar grades, see Table 7.1. In general, cast iron is not defined by a chemical composition but only by physical properties. Some specifications limit proportions of certain elements. The tensile strength depends primarily upon the content of carbon and reduces as the carbon content increases. The carbon occurs as graphite flakes enclosed in a steel-like matrix. The flake formation means that the value of elastic limit is low. The impact strength of cast iron is affected by the flakes but cast iron can be used down to -50°C, and maximum temperatures of about 200/250°C for general purpose cast irons. Because of the relatively low tensile strength, grey cast iron impellers are restricted to "low" peripheral speed pumps. Note also that the strength of cast iron is related to the thickness; specifications must be reviewed during the design process.

Grey cast iron is the most commonly used material in centrifugal pumps. From the corrosion point of view, it has a very wide field of application. Grey cast iron can be used without any great risk in water, or aqueous solutions, with pH values between 6 and 10. Grey cast iron can be used in more acidic media, but it is dependent to a high degree upon what has caused the lower pH value. Temperature dependence is also more accentuated in this region. Because of its high carbon content, grey cast iron quickly acquires a protective graphite layer, which means, from the strength point of view, that poorer quality cast iron with higher carbon content has better protection against corrosion. Grey cast iron is also superior to normal steel for the same reason.

Grey cast iron is used for bearing housings because of its compressive strength and damping qualities. It is used as standard material for crankcases for all types of reciprocating pumps.

Meehanite® is a proprietary foundry process for producing cast iron under a more rigorously controlled manufacturing cycle. It tends to be stronger and can be cast in thinner sections and should be considered when ever cast iron is appropriate. (Meehanite® is an organisation comprising a world-wide network of licensed foundries sharing co-ordinated development and interchange of technology.)

LIBERTY EXHIBIT 1034, Page 235
This book belongs to Robert Durham (rdurham@thewaylabs.com)
Copyright Elsevier 2024

Cast iron can be welded or repaired by welding. However, the weld material will have a different chemical structure, and perhaps physical properties, from the parent material. Extreme caution should be exercised if cast iron is to be welded.

NOTE: When designing pressure vessels or pump casings, the maximum stress due to internal pressure occurs at the inner wall. For vessels, casings, without holes through the wall, the inner tensile stress will be approximately equal to the internal pressure. The internal pressure can never be greater than the design stress. Holes through the wall will create stress concentrations, values of 1.5 to 3.5 are typical, further reducing the maximum internal pressure. Design tensile stress values given are for room temperature conditions.

Standard	Grade	Tensile strength min MPa	Max temp °C	Approx. max tensile design stress MPa	Remarks
EN 1561 See DIN 1691 ASTM A48	EN JL 1020	150	≈ 300	38	As cast design values
	EN JL 1030	200	≈ 300	50	
	EN JL 1040	250	≈ 300	63	
	EN JL 1050	300	≈ 300	75	
	EN JL 1060	350	≈ 300	88	
ISO 185	200	200	300	50	As cast
	250	250	300	62	
ASTM A126	A	145	230	36	As cast
	B	214	230	53	
ASTM A278	C120	138	230	35	
	C125	172		43	
	C130	207		52	
	C135	241		60	
ASTM A278	C140	276	345	70	Restricted carbon content P ≤ 0.25% S ≤ 012%
	C145	310		77	
	C150	345		86	
	C155	379		94	
	C160	414		103	
Meehanite	GF150	150	≈ 350	40	As cast design value
	GE200	200	≈ 350	50	
	GD250	250	≈ 350	62	
	GB300	300	≈ 350	75	
	GM400	400	≈ 350	100	

Table 7.1 Specifications for grey cast iron

Standard	Grade	Tensile strength min MPa	Max temp °C	Approx max tensile design stress MPa	Remarks
EN 1563 See DIN 1693	EN JS 1015	350	≈ 350	102	Elongation 22%
	EN JS 1025	400	≈ 350	116	Elongation 18%
	EN JS 1040	450	≈ 350	130	Elongation 10%
	EN JS 1050	500	≈ 350	145	Elongation 7%
	EN JS 1060	600	≈ 350	156	Elongation 3%
	EN JS 1090	900	≈ 350	225	Elongation 2%
ISO 1083	350-22	350	350	87	Elongation 22%
	400-15	400	350	100	Elongation 15%
	500-7	500	350	125	Elongation 7%
	600-3	600	120	150	Elongation 3%
ISO 2531	400-5	400	350	100	Elongation 5%
ASTM A536	60-40-18	413	≈ 350	102	Elongation 18%
	65-45-12	448	≈ 350	112	Elongation 12%
	0-55-06	551	≈ 350	137	Elongation 6%
	100-70-03	689	≈ 350	172	Elongation 3%
	120-90-02	827	≈ 350	206	Elongation 2%
Meehanite	SFF350	350	350	87	Elongation 24%
	SFF400	400	350	100	Elongation 20%
	SF400	400	350	100	Elongation 17%
	SFP500	500	350	125	Elongation 8%

Table 7.2 Specifications for spheroidal and nodular cast iron

7.2.2 Spheroidal and nodular cast iron

Spheroidal or nodular cast iron is called SG iron and ductile iron. See Table 7.2. By analysis, this grade of cast iron is very like ordinary cast iron with regard to carbon and silicon content. In contrast to ordinary cast iron, however, the graphite is not in flakes but occurs in the form of small spheroidal nodules in a mainly pearlite matrix. This is brought about by adding small quantities of magnesium to the melt before pouring. Because of the spheroidal form of the graphite, spheroidal or nodular cast iron has a substantially greater strength than ordinary cast iron and is much more ductile. Furthermore, the elastic limit is greater and the resistance to impact is better.

Further improvement in the elastic limit and impact resistance can be obtained by heat treatment, whereby the basic matrix is changed towards a ferritic structure. Spheroidal or nodular cast iron is ideally suited for pressure vessels subjected to internal pressures, where these were formerly always assigned to cast steel. Spheroidal or nodular cast iron also has some welding properties. The resistance to corrosion is very similar to that of grey cast iron at low flow velocities. At higher flow velocities this material often has a lower resistance than ordinary cast iron.

7.2.3 Low alloy steel

A steel can be classified as "low alloy" if none of the alloying elements exceeds 4.5%. Typically alloying elements are rarely greater than 3%. Low alloy steel castings and wrought material only differ slightly in chemical analysis because of certain additives intended to improve castability. Some low alloy steels have small additions of nickel and chromium in order to improve their strength at elevated temperatures. Steel castings are used mainly for high pressure and hot liquid pumps but are being replaced more and more by spheroidal or nodular cast iron and higher alloyed steel.

From the corrosion aspect, steel castings are not as good as grey cast iron or spheroidal or nodular cast iron, because, by preference, the carbon content should not exceed 1.5%, which is insufficient to provide a protective graphite layer. The carbon content affects the heat treatment of the steel and the weldability. Trace quantities of chrome and nickel improve hardening qualities, ductility and impact resistance. High strength bolting materials have about 0.4% carbon and 1% chrome. Low alloy steel plate and forgings are used for various components, see Table 7.3.

7.2.4 Alloyed cast iron

The properties of flaked and spheroidal cast iron can be altered to a large extent by the addition of alloying elements which affect strength, workability, and resistance to corrosion and abrasion. The following elements can be used:

7.2.4.1 Copper, (for flaked graphite cast iron only)

Copper additives give the basic matrix of cast iron a more uniform pearlite structure with less ferrite and a better form and distribution of the graphite. The tensile strength increases by 10% to 20% with additions of 1% and 2%, with corresponding increases in hardness. Corrosion resistance to very concentrated sulphuric acid and solutions of sulphuric acid, for example, is markedly improved.

7.2.4.2 Nickel and chromium

Small additions of nickel and/or chromium cause the structure to be more even and finely distributed giving advantages similar to those for copper. Furthermore, casting material integrity is improved.

The additions of 20% Ni (Ni-Resist) causes the matrix to become austenitic and non-magnetic. This quality has shown itself to be very useful for seawater and other chloride containing liquids, even at high temperatures. The strength is similar to the corresponding grades of grey cast iron and spheroidal or nodular cast iron.

Ni-Resist, with alloying proportions of about 6% Ni and 9% Cr produces a martensitic matrix with chrome carbides, resulting in hardness figures between 500 and 600 BHN. The hardness can be further increased by heat treatment or by increasing the

LIBERTY EXHIBIT 1034, Page 236
This book belongs to Robert Durham (rdurham@thewaylabs.com)
Copyright Elsevier 2024

Standard	Grade	Major constituents	Tensile strength min MPa	Max temp°C	Remarks
EN 10213-2	GP240GR	0.21C 0.6Si 0.6Mn 0.03P 0.02S	420	≈ 200	Cast RT min(1)
DIN 1681 Werkstoff ISO 4991 ASTM A216	GS-45 1.0435 C23-45B WCA	0.25C 0.25Cr 0.15Mo 0.4Ni	430	400	Cast RT min (**1**)
EN10213-2	GP280GH	0.21C 0.6Si 0.5Mn 0.03P 0.02S	480		Cast RT min
DIN 1681 ISO 4991 ASTM A216	GS-52 C26-52H WCB	0.30C 0.25Cr 0.15Mo 0.4Ni	480	390/480	Cast RT min
BS 1503	164-490	0.25C 0.25Cr 0.1Mo 0.4Ni 1Mn	490	480	Forged
EN10213-2	G12MoCrV5-2	0.12C 0.45Si 0.55Mn 0.5Mo 0.4Cr 0.03P 0.02S	610	≈ 400	Cast RT min
BS 1503	221-550	0.35C 0.25Cr 0.1Mo 1.1Mn 0.4Ni	550	350	Forged
BS 3100 ISO 4991 ASTM A352	AL1 C23-46BL LCB	0.2C 1.1Mn		≈ 425	Cast -46°C min
BS 970 Werkstoff	070M20 'N' 1.0402	0.2C 0.7Mn	400	≈ 200	Wrought
BS 970	080M30 'N'	0.3C 0.75Mn	460	≈ 200	Wrought
BS 970 Werkstoff	080M40 'N' 1.0503	0.4C 0.8Mn	510	≈ 200	Wrought
BS 970 Werkstoff	708M40 'S' 1.7225	0.4C 0.85Mn 1Cr 0.2Mo	770	≈ 500	Wrought (**2**)
AISI Werkstoff	1040 1.1186	0.4C 0.75Mn	551	≈ 200	Wrought
AISI Werkstoff	4140 1.7225	0.43C 0.8Mn 1Cr 0.2Mo	860	≈ 500	Wrought (**2**)
EN 10113-2 Werkstoff	S355N 1.0483	0.2C1.2Mn + N_2	470		Structural plate
EN 10113-2 Werkstoff	S420NL 1.0570	0.2C 1.35Mn 0.15Cr + N_2	500		Low temp structural plate -30°C
BS 4882 ASTM A193 DIN 17200	B7 B7 42Cr.MO.4	0.4C 0.85Mn 1Cr 0.2Mo	860	400/500	Bolt/stud -45°C min
BS 4882 ASTM A194 DIN 17200	2H 2H C45	0.4C	PLT (**3**)	450	Nut 0°C min

Table 7.3 Properties of low alloy steel — (1) RT ≡ room temperature — (2) reduced allowable stress over 350°C — (3) PLT ≡ proof load tested

Standard	Grade	Major constituents	Tensile strength min MPa	Max temp°C	Remarks
ASTM A436	Type 1	2.1Cr 15.5Ni 1Mn 6.5Cu 1.9Si	172		Wear resistant, best anti-galling properties
BS 3468 DIN 1694 See ISO 2892	L-NiCr 20 2 GGG-NiCr20 2	1.8Cr 20Ni 1Mn 0.3Cu 1.9Si	170	650	Good for alkalis -50°C min
ASTM A436	Type 2	2.1Cr 20Ni 1Mn 0.3Cu 1.9Si	172	705	Good for corrosive environments
BS 3468 DIN 1694 See ISO 2892	S-NiCr 20 2 GGG-NiCr20 3	1.8Cr 20Ni 1Mn 0.3Cu 2.2Si	170	650	
ASTM A439	Type D-2	2.25Cr 20Ni 1Mn 2.25Si	400	815	8% elongation, wear/galling resistant
BS 3468 See ISO 2892	S-NiMn 23 4	0.2Cr 23Ni 4.2Mn 2Si	440		-196°C min
ASTM A439	Type D-2M	0.2Cr 22.5Ni 4Mn 2.2Si	417		-196°C min wear/galling resistant
BS 3468 ASTM A436 See ISO 2892	L-NiCr 30 3 Type 3	3Cr 30Ni 1Mn 0.3Cu 1.5Si	172	815	Erosion resistant, good corrosion resistance
ASTM A439	Type D-3	3Cr 30Ni 1Mn 1.9Si	379	815	6% elongation, superior erosion resistance
ASTM A439	Type D-4	5Cr 30Ni 1Mn 5.5Si	414	815	Wear/galling resistant
ASTM A436	Type 4	5Cr 30.5Ni 1Mn 0.3Cu 5.5Si	172		Best grade for erosion, corrosion, oxidation resistance
ASTM A436	Type 5	0.05Cr 35Ni 1Mn 0.3Cu 1.5Si	138	425	Dimensionally stable
ASTM A439	Type D-5	0.05Cr 35Ni 1Mn 1.9Si	379		Elongation 20%

Table 7.4 Typical alloy cast irons

chrome content up to 30%. Thus a material can be produced with very good resistance to abrasion and erosion. Because of the considerable hardness, the material can only be worked by means of grinding so that special designs are required for pumps.

7.2.4.3 Silicon

Silicon alloyed cast iron, silicon iron, is highly resistive to acids if the silicon content is greater than 13%. This material is resistant to sulphuric acid at all concentrations and also to many other non-organic and organic acids, though not to hydrofluoric acid, hot concentrated hydrochloric acid, sulphurous acids, sulphites and hot alkalis. An addition of 3% molybdenum makes the material resistive also to hydrochloric acid and solutions containing chlorine.

Silicon iron is very difficult to cast and displays poor integrity under pressure. For this reason, it should never be used in pumps with an internal pressure greater than 4 barg. As the material is hard and very brittle, special design principles are normally

LIBERTY EXHIBIT 1034, Page 237
This book belongs to Robert Durham (rdurham@thewaylabs.com)
Copyright Elsevier 2024

Standard	Grade	Major constituents	Tensile strength min MPa	Max temp°C	Remarks
EN 10213-2 ASTM A296 Werkstoff DIN 17445	GX8CrNi12 CA-15 1.4027 G-X 20 Cr 14	0.1C 0.55Mn 12Cr 1Ni	540	600	Castings
BS 970 Pt4 Werkstoff DIN 17440	420S45 1.4028 1.4034 X 30 Cr 13 X 46 Cr 13	0.32C 1Mn 13Cr 1Ni	690	400	Bar
BS 1503 ASTM A182 Werkstoff	410S21 F6b 1.4001	0.12C 1Mn 12.5Cr 1Ni	590	400	Forgings
BS 4882 ASTM A193 Werkstoff DIN 17440	B6 B6 1.4006 X 10 Cr 13	0.15C 12.5Cr 1Mn	758	425	Fasteners -28°C min
EN 10213-3	GX3CrNi13-4	0.05C 1mn 0.7Mo 12.7Cr 4.2Ni	760		Castings -120 °C min

Table 7.5 11-13% Cr materials

used for pumps, e.g. liners of silicon iron in a steel casing to take the pressure stresses. Table 7.4 lists the important alloys.

7.2.5 11-13% Cr steel

Rotodynamic pump manufacturers use 11-13% Cr steel as an improvement on low alloy steel when full stainless steels are not required. Material integrity is greatly improved because of carbide formation due to the addition of chrome. The structure is martensitic. Strength and hardness are improved, as are heat resistance and scaling properties. It can be used up to 600°C but strength falls off rapidly over 300°C. Weldability suffers slightly as the chrome content is increased. Traces of nickel improve hardenability and also impact properties. Hardness values between 180 and 450 BHN can be obtained. It is used for pump casings, impellers, shafts and wear rings and can be a good material choice for boiler feed water. Alloys with 4% Ni have improved corrosion resistance and better low temperature properties. 11-13 Cr steel is not generally used by reciprocating pump manufacturers. Materials are shown in Table 7.5.

7.2.6 Stainless steel

It is a general rule for steels that the content of alloying elements should not exceed 50% of the total. A characteristic of all stainless steels is that they contain a minimum of 15% chromium. In the presence of oxygen this forms a thin invisible film of chromic oxide which is chemically resistant and inhibits any direct contact between the surrounding medium and the steel. It is, however, necessary that oxygen is present in order to maintain the film. The steel is said to be in a passive state. In a reducing atmosphere on the other hand, there can be no build-up of the chromic oxide layer and the steel is then said to be in an active state.

The designation "stainless" steel is not altogether correct, as these steels can easily be subject to corrosive attack depending upon external circumstances relative to alloying content, degree of heat treatment, welding and so on. In general, stainless steels exposed to normal atmospheric conditions will not corrode or discolour.

The corrosion resistance of stainless steels is dependent upon the rate at which the passive oxide layer is dissolved into solution. This rate is slowed down mainly by alloying with metals which themselves have high resistance to corrosive media. Such alloying elements are, in the main, nickel, molybdenum and copper. The effects of chromium are then less important from the point of view of chemical resistance.

The presence of molybdenum in significant quantities greatly enhances the corrosion resistance. The structure of the iron matrix is changed by the various alloying additives. The type of structure is used to divide stainless steel and acid resistant steels into the following groups, see also Figure 7.5:

- Ferritic, which can be hardened by heat treatment
- Martensitic, which can be hardened by heat treatment
- Austenitic, which are totally non-magnetic and cannot be hardened by heat treatment
- Ferritic-austenitic, which are paramagnetic.

The austenitic stainless steels have lower tensile strength and greater corrosion resistance and toughness than the other groups. This makes them easier to manufacture into the various forms, such as sheet metal and piping. Because pumps are largely produced from castings, the chemical analysis can be chosen with greater freedom.

Using the same main analysis there are a number of standardised variants of materials. The main reason for this is the modification of chemical structure around a weld, usually carbide precipitation. Carbide precipitation is eliminated in the various standard variants by:

- Low or extra-low carbon content
- Addition of titanium or niobium in proportions of 5 to 10 times the carbon content to stabilise the carbides.

Carbide precipitation can be corrected by a post weld heat treatment. In general, heat treatment is not preferred. Components which have welded attachments, or may require weld repairs, should be made from low carbon varieties.

Cast and wrought versions of the same variety may have slightly different chemical compositions to accommodate the different manufacturing processes

Austenitic stainless steels have low strength. The strength can be improved by inoculating the steel with nitrogen or by cold working.

Most stainless steels are recognised by their designations proposed by the American Iron and Steel Institute, AISI, and the Alloy Casting Institute of America, ACI, or Steel Founders Society of America, (SFSA). The most well known are the AISI designa-

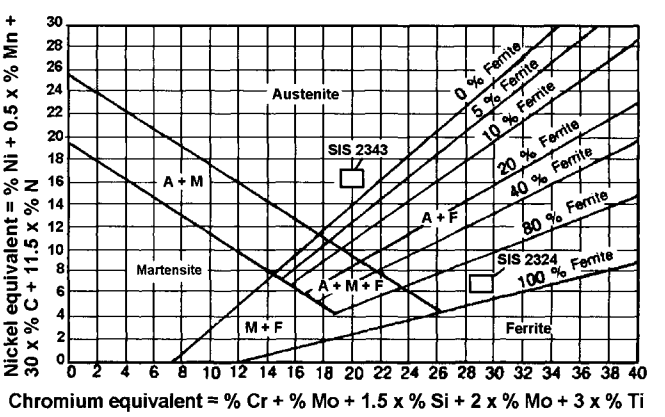

Figure 7.5 Modified Schaeffler diagram for determining structure of a stainless steel

LIBERTY EXHIBIT 1034, Page 238
This book belongs to Robert Durham (rdurham@thewaylabs.com)
Copyright Elsevier 2024

tions for wrought products. The majority of the popular stainless steels belong to the 300 series. The inclusion of "L" means low carbon version; "N" means nitrogen strengthened. The AISI designations are generic, a full product specification is required for purchasing.

AISI	ACI	Nominal composition Cr/Ni/Mo
303	CF-16F	18/9/0.6
304	CF-8	19/9
304L	CF-3	19/10
316	CF-8M	17/12/2
316L	CF-3M	17/12/2
317	CG-12	19/13/3
347	CF-8C	18/11

Table 7.6 Popular austenitic stainless steels

Table 7.6 indicates the relationship between the popular AISI and ACI grades and Table 7.7 summarises their various compositions.

7.2.7 Super stainless steel

Materials are always required with better corrosion resistance. The expansion of offshore oil production, together with secondary recovery by seawater, led to a demand for materials with superior pitting resistance. Molybdenum and nitrogen content were found to be of critical importance. These super stainless steels are the result of much research by oil companies, pump manufacturers and steel makers. Super stainless steels can be welded by most popular techniques; resistance to stress- corrosion cracking is not impaired, although some loss of toughness and resistance to intercrystalline corrosion may be apparent. See Table 7.8.

7.2.8 Copper alloys

Copper alloy components are used largely for salt water and weak cold chloride solutions; for corrosive properties of seawater and choice of materials for use with seawater see Section 2.2.4, in Chapter 2. The alloys have varying casting characteristics associated with solidifying temperatures, which in turn are

Standard	Grade	Major constituents	Tensile strength min MPa	Max temp°C	Remarks
Werkstoff DIN 17445 ISO 4991	1.4308 G-X 6 CrNi 18 9 C47	0.12C 17Cr 7Ni 2Mn	460	700	Castings
BS 1503 Werkstoff DIN 17440	304S11 1.4306 X 2 CrNi 18 9	0.03C 18Cr 10.5Ni 2Mn 0.3Mo	480	450	Forgings
ASTM A351 ISO 4991	CF-3M C61LC	0.03C 18Cr 9Ni 2Mo	480	454	Castings
EN 10213-4 Werkstoff DIN 17445	GX5CrNiNb19-11 1.4552 G-X7 CrNiNNb 18 9	0.07C 19Cr 9Ni 1.5Mn	480	680	Castings
BS 1503 Werkstoff DIN 17440	347S31 1.4550 X 10 CrNiNb 18 9	0.08C 18Cr 10.5Ni 2Mn 0.3Mo	510	450	Forgings
EN 10213-4 Werkstoff DIN 17445 ISO 4991	GX5CrNiMo 19-11-2 1.4408 G-X6 CrNiMo 18 10 C60 C61	0.08C 19Cr 10Ni 2.5Mo 1.5Mn	480	700	Castings
BS 1503 Werkstoff DIN 17440 ISO 2604-1	316S31 1.4401/36 X 5 CrNiMo 17 12 2 F62	0.07C 17.5Cr 12Ni 2Mn 2.2Mo	610	700	Forgings
ASTM A351 DIN 17445 ISO 4991	CF-8M G-X3 CrNiMoN 17 13 5 C57	0.08C 19.5Cr 10.5Ni 1.5Mn 2.5Mo	483	815	Castings
SIS Werkstoff DIN 17440	2343 1.4436 X 5 CrNiMo 18 12	0.05C 17.5Cr 12Ni 2.8Mo	450	400	Castings
ASTM A351	CG-6MMN	22Cr 13Ni 5Mo + N_2	517	565	Castings
ASTM A182 ISO 2604-1	F316L F59	0.03C 16Cr 12Ni 2Mo	448	454	Forgings
BS 1503	318S13	0.03C 22Cr 5Ni 2Mn 3Mo	640	300	Forgings
ASTM A182	XM-19	22Cr 13Ni 5Mn 2Mo + N_2	689	565	Forgings
SIS Werkstoff	2324 1.4460	0.05C 25Cr 5.7Ni 1.5Mo 2Mn	600	315	Cast
BS 1506	304S71	0.07C 18Cr 9.5Ni 2Mn			Fasteners B8N
BS 1506	316S51	0.07C 17.5Cr 12Ni 2.2Mo 2Mn			Fasteners B8MH
BS 4882 ASTM A193	B8 B8	0.08C 19Cr 9Ni 2Mn	517	425/575	Fasteners -254°C
BS 4882 ASTM A193	B8M B8M	0.08C 17Cr 12Ni 2.5Mo 2Mn	517	425/575	Fasteners -196°C
ASTM A193	B8R	0.06C 22Cr 12.5Ni 5Mn 2Mo + N_2	689		Fasteners

Table 7.7 Austenitic stainless steels

Standard	Grade	Major constituents	Tensile strength min MPa	Max temp°C	Remarks
EN 10213-4	GX2CrNiMoN22-5-3	0.03C 22Cr 5.5Ni 3Mo 2Mn N_2	600	≈ 300	Castings
	FMN	0.05C 25Cr 5Ni 2Mo 0.8Mn N_2	695	≈ 300	Castings
	Ferralium 255	0.08C 25.5Cr 5.5Ni 3Mo 2Mn N_2	830	≈ 300	Castings
	Amazon 256-Cu	0.04C 25.5Cr 5.5Ni 3Mo 1.5Mn N_2	760	≈ 300	Wrought
	Zeron 25	0.03C 25Cr 6.5Ni 2.5Mo 1.5Mn N_2	650	≈ 300	Castings
	Zeron 100	0.03C 25Cr 7Ni 3.5Mo 1Mn N_2	756	≈ 300	Castings
	Ferralium 288	0.08C 27.5Cr 7.5Ni 2.5Mo 2Mn N_2	800	≈ 300	Castings
	254SMO	0.02C 20Cr 18Ni 6.1Mo 0.5Mn N_2	651		Castings

Figure 7.8 Super stainless steels

LIBERTY EXHIBIT 1034, Page 239
This book belongs to Robert Durham (rdurham@thewaylabs.com)
Copyright Elsevier 2024

determined by the alloying elements. For tin-bronze with about 10% tin, the temperature range is 200 to 250°C. The prime result of this is that a certain amount of microscopic porosity cannot be avoided in the solidifying alloy. This porosity need not mean that the casting is not pressure-tight. The wide solidifying temperature range makes the alloy relatively easy to cast.

Brass with 30% to 35% zinc and aluminium-bronzes with about 10% aluminium have solidifying temperature ranges between 200 and 210°C. The structure is fairly non-porous although large cavities due to coring may occur which can be eliminated by careful metal feeding. These alloys with narrow solidifying temperature ranges are more dependent upon the shape of the casting and involve higher costs.

Gunmetal made up of about 5% each of tin, lead and zinc, is easily cast. The pressure-tightness quality increases with lead content up to about 7%.

From the corrosion point of view, copper and its alloys give widely varying results. Here, as with other materials, it is a solid oxide film which provides the protection against further corrosion. The rate of build-up of this protective film varies and is affected by flow velocities. Table 7.9 lists some commonly used alloys.

Standard	Grade	Major constituents	Tensile strength min MPa	Max temp°C	Remarks
BS 1400 ISO 1338 DIN 1714 ASTM B148	AB1 CuAl10Fe3 CuAl10Fe C95200	9.5Al 2.5Fe 1Ni	500		Castings
BS 1400 ISO 1338 DIN 1714 ASTM B148	AB2 CuAl10Fe5Ni5 CuAl10Ni C95500	9.5Al 4.5Fe 4.5Ni	640	» 300	Castings » -150°C
BS 1400 ISO 1338 DIN 1705 ASTM B145	LG2 CuPb5Sn5Zn5 CuSn5ZnPb Gr836	5Sn 5Zn 5Pb	200	» 300	Castings -196°C min
BS 1400	PB4	9.7Sn	190		Castings
BS 2872 ISO	CA 107 CuAl7Si2	6Al 2.2Si	520		Forgings
BS 2872 ISO DIN 17665 ASTM B150	CA 104 CuAl10Ni5Fe4 CuAl10Ni C63200	9.5Al 4.5Fe 4.5Ni	700	» 500	Forgings
BS 2874	CA104	9.5Al 4.5Fe 4.5Ni	700	400	Fasteners, suitable for cryogenics

Table 7.9 Common copper alloys

7.2.9 Aluminium alloys

Aluminium alloys, Table 7.10, are not used to any great extent in pumps, because of their low resistance to corrosion and low hardness. The exceptions are those areas where low weight is a prime factor, for example in building site ground drainage, and also where manufacturing costs are important as in domestic pumps. The range of application can be increased by inhibiting electrolytic corrosion or actually making use of it, for example by:

- Insulating from more noble materials such as steel
- Connecting to less noble materials, so-called sacrificial anodes of zinc or magnesium

Standard	Grade	Major constituents	Tensile strength min MPa	Max temp °C	Remarks
BS 1490 ISO 3522	LM 4 Al-Si5Cu3	5Si 3Cu	230		Castings
BS 1490 ISO 3522 DIN 1725 ASTM B85	LM 9 Al-Si10Mg AlSi10Mg SG100A	11.5Si 0.5Mn 0.4Mg	240	150	Castings
BS 4300/11 ISO	5454 AlMg3Mn	2.7Mg 0.7Mn	275		Forgings
BS 1472 ISO	2014A AlCu4SiMg	4.5Cu 0.8Mn 0.5Mg 0.7Si	370		Forgings
	AGS 6060		300		Fasteners
	AZ5GU-707 5	5.5Zn 2.3Mg 1.5Cu	550		Fasteners

Table 7.10 Common aluminium alloys

7.2.10 Nickel alloys

Nickel base alloys, as also pure nickel itself, come as a natural extension at a point where stainless steels are no longer satisfactory from the corrosion point of view. They are not easy to cast as a rule, and require high annealing temperatures, about 1200°C, in order to maintain the correct structure and grain size which are necessary for good corrosion resistance. Nickel alloys are dominated by a group usually called by the trade name of Hastelloy. Similar alloys are manufactured under different trade names. See Table 7.11 for a list of the chemical composition of the commonest nickel alloys.

Hastelloy B has high corrosion resistance in strong hydrochloric and sulphuric acids. Unfortunately, the alloy is sensitive to high flow velocities and is rarely used in centrifugal pumps.

Hastelloy C is the most common of the nickel alloys because of its resistance in both oxidising and reducing atmospheres. It is used mainly for chloride solutions, e.g. liquids containing free active chlorine, bleaching fluids or hypochlorite and chlorine dioxide solutions, where the chlorine content should not exceed 15 g/l at room temperature. It also has a good resistance to acids at temperatures below 70°C.

Hastelloy D possesses good resistance to erosion, due to its high hardness, approximately 400 BHN. It has its best application in sulphuric acid, against which it has high resistance at all concentrations and high temperatures, and within certain limits for boiling acids also. Maximum corrosion resistance is achieved only after about six weeks in operation, which is the time it takes for a protective sulphate film to build up on the surface.

Monel is more resistant than nickel under reducing conditions and more resistant than copper under oxidising conditions. In summary, it can be said that monel is more resistant to corrosion than are its main components. Re-precipitation of dissolved copper cannot occur, since nickel, copper and monel lie very close to each other in the electrolytic series, galvanic series. Monel however, is somewhat difficult to cast and often results in porous castings. It is therefore used mainly for non pressurised components, such as impellers, or in wrought form for shafts. Monel has very good resistance to salt water especially at higher flow velocities. In stationary seawater, biological growth may cause local concentrations of oxygen which lead to localised attacks.

7.2.11 Other metallic materials

A number of metallic materials are available for special purpose use. Some of these are discussed in the following Sections:

7.2.11.1 Lead and lead alloys

Because of its poor mechanical properties, pure lead is not used as a material for pumps. A 10% to 25% addition of antimony, Sb, improves its strength characteristics considerably.

LIBERTY EXHIBIT 1034, Page 240
This book belongs to Robert Durham (rdurham@thewaylabs.com)
Copyright Elsevier 2024

Standard	Grade	Major constituents	Tensile strength min MPa	Max temp°C	Remarks
	Hastelloy B	28Mo 5Fe 1.2Co 0.5Cr	≈ 950	760	Cast, Very ductile
	Hastelloy C	17Mo 16.5Cr 5.7Fe 4.3W	≈ 490	980	Cast, Very ductile
	Hastelloy C	17Mo 16.5Cr 5.7Fe 4.3W	≈ 690	980	Wrought, Very ductile
	Alloy 20	36Fe 20Cr 3.5Cu 2.5Mo 2Mn 1Si	670		Cast, Very ductile
	Langalloy 7R	23Cr 6Mo 6Cu 5Fe 2W	420		Cast, acid resistant
BS 3076	NA 18	30Cu 2.7Al 1Fe 0.8Mn	1000		Fasteners
BS 3076	NA 14	15Cr 8Fe	830	600	Wrought
	Inconel 625	22Cr 9Mo 5Fe + No + Ta	725/900	≈ 800	Fasteners & wrought
	Inconel X750	15.5Cr 7Fe 2.5Ti	1130	≈ 650	Wrought
	Monel K-500	30Cu 2.7Al 1Fe 0.8Mn	900		Wrought
	Incoloy 800	32Ni 21Cr 1.5Mn	517/690	815	Wrought

Table 7.11 Common nickel based materials

Standard	Grade	Major constituents	Tensile strength min MPa	Max temp°C	Remarks
ASTM Gr 2	CP		380	300	Wrought & cast
ASTM Gr 5	Ti-6Al-4V	6Al 4V	900	325	Wrought & cast
	TiMetal 550	4Al 4Mo 2Sn	1100	400	Wrought
	TiMetal 551	4Al 4Mo 4Sn	1200	400	Wrought
ASTM Gr Beta C	Beta	8V 6Cr 4zr 4Mo 3.5 Al	1240	450	Wrought

Figure 7.12 Common titanium alloys

The alloy is called hard lead. For higher pressure applications, a structural pressure retaining casing could be lined with lead.

Lead has a very good resistance to acids, with the one exception of nitric acid. In sulphuric acid, lead sulphate is built up on the surface of the lead which is difficult to dissolve and acts as a protective film. Lead can be used for sulphuric acid at a concentration of 30% and temperature 100°C, but temperatures have to be reduced at higher concentrations. In hydrochloric acid a film of lead chloride builds up, which protects the underlying metal to some extent. If the acid is in motion however, the surface layer wears away easily, so that lead pumps are not recommended for hydrochloric acid.

7.2.11.2 Titanium

Titanium has low density, 4500 kg/m^3, and very good tensile strength. Titanium alloy castings can have strengths up to 890 MPa, forgings up to 1200 MPa. Titanium is relatively difficult to work however. It is cast centrifugally in graphite moulds in vacuum chambers in the presence of inert gas. Titanium can be wrought and is used because of its low density for dynamic components such as valve plates.

Titanium is being used more and more in the chemical industry mostly because if its good corrosion resistance to solutions containing free active chlorine. Corrosion is completely excluded in such solutions as chlorine dioxide in water, hypochlorites, chlorates and metal chlorides.

In some cases titanium can be a more economic solution, than the proprietary super stainless steels listed in Table 7.8. Because of its very good strength-to-weight ratio titanium can be used to advantage in corrosive applications where weight is important.

7.2.11.3 Tantalum

Such exotic metals as tantalum, hafnium, niobium and germanium have lately come more into their own for modern industrial products, where very high corrosion resistance is required for reliability. Tantalum has a corrosion resistance very nearly equal to that of glass. It is resistive to boiling sulphuric and hydrochloric acids. The density of tantalum is 16,600 kg/m^3. The ability to cast and weld is extremely limited, so that parts with complex shapes do not lend themselves to economic production. For rotodynamic pumps tantalum is generally used to provide an internal lining. Some reciprocating pumps can be easily manufactured solely from wrought products without any welding.

7.2.11.4 Tungsten carbide

Tungsten carbide is a sintered material originally produced as a high quality cutting tool material. Its hardness, abrasion resistance and improved manufacturing techniques have led to its adoption in several key areas of pump construction. Initially produced only with a cobalt binder it is now available with nickel as an alternative. The main area of use is in seal faces for mechanical seals. It is also found in valve seats of reciprocating pumps operating on abrasive liquid-solid mixtures. Tungsten carbide can be sprayed as a surface coating, see Section 7.2.13.

7.2.12 Non-metallic materials

Non-metallic materials are extremely important in pump construction. Most pumps use some non-metallic materials even though major components are metallic. Most pump designs embody gaskets and seals which rely on the very different properties of non-metallic materials. Non-metallic materials can be divided into five main categories:

- Thermoplastics
- Thermosetting plastics
- Elastomers
- Ceramics
- Minerals

Thermoplastics, thermosetting plastics and elastomers are often confused; in some cases the physical properties are very similar and all three groups of materials are used for the same function. Gaskets, seals and "O" rings are examples of components which are produced in all three groups of material. These materials also tend to absorb liquids when in contact; this property must be considered during the design and application stages.

Ageing, and the effects of ultraviolet radiation must also be studied. Some materials are only suitable for relatively low temperatures, up to 50°C for example. "High" temperature tends to age some non-metallic very quickly. A temperature increase from 20°C to 60°C could reduce the useful life by 80%. Care must be exercised to ensure that no operating conditions occur outside the temperature range. In some processes the system

LIBERTY EXHIBIT 1034, Page 241
This book belongs to Robert Durham (rdurham@thewaylabs.com)
Copyright Elsevier 2024

commissioning requires short-term exposure to higher than normal temperatures; these instances should be discussed fully with the pump manufacturer so the long-term effects can be evaluated.

Plastics can be filled with various materials, either for bulk or to improve the strength. Glass, carbon and KEVLAR® fibres are used for strengthening. Thermal expansion, especially in the axial direction of the plastic pump, has to be taken into account when routing the pipework. Similarly, the pump must be relieved of pipework forces and moments to the fullest possible extent.

Many companies have registered trade names for materials. The same material may be known by many different names depending upon the company which produced it. Just as with metals, some materials may be slightly different and possess remarkably different physical and chemical properties. Great care should be exercised when specifying specific materials.

7.2.12.1 Thermoplastics

The following popular materials are thermoplastics:

- Acetal
- Acrylic
- acrylonitrile butadiene styrene (ABS)
- aromatic nylons (ARAMID)
- fluorocarbons
- fluorinated ethylene propylene (FEP)
- Nylon
- polyester ether ether ketone (PEEK)
- polyacetal
- polybutylene (PB)
- polycarbonate
- polychlorotrifluoroethylene (PCTFE)
- polyether
- polyethylene (PE)
- polyethylene chlorotrifluoroethylene (PECTFE)
- polyethylene terephthalate (PETP)
- polyethylene tetrafluorethylene (PETFE)
- polyfluoroalkoxytetrafluoroethylene (PFA)
- polyimides
- polymethyl pentene (PMP)
- polymide
- polypropylene (PP)
- polysulphone (PS)
- polytretrafluoroethylene (PTFE)
- polytrichloroethylene (PTFCE)
- polyvinylfluoride (PVF)
- polyvinylidene fluoride (PVDF)
- polyphenylene oxide PPO
- polyvinyl chloride (PVC)

Thermoplastics are characterised by their ability to be repeatedly softened by heating and then hardened by cooling; their shape can be changed many times. Notice that PTFE is a thermoplastic and not an elastomer, even though it is used in many applications where elastomeric properties are required.

A sub group within thermoplastics are the thermoplastic elastomers. These are man-made materials which have rubber-like properties with enhanced chemical resistance. The thermoplastic elastomers can have their chemical compositions adjusted to bestow particular properties to the material.

Some thermoplastics have excellent impact, abrasion and tear resistance. Compounds of this type would be used for internal liners on some solids handling applications.

The fluorocarbons are a sub group containing FEP, PCTFE, PECTFE, PETFE, PFA, PTFE and PVDF.

Acetal is a high melting point plastic with high strength and rigidity. Acetal can be extruded, cast and moulded. It is used for a wide variety of purposes including impellers, casings, bearing housings and bearings.

Aromatic nylons are usually formed as fibres such as ARAMID®, KEVLAR® or NOMEX®. These fibres are used to reinforce and strengthen moulded or cast materials. The fibres can also be used for braiding in the case of soft packing.

Popular thermoplastic materials are filled or alloyed with other materials to improve specific properties. Nylon is a favoured bearing material; it can be reinforced with glass to increase strength and stiffness; it can also be alloyed with molybdenum disulphide to improve mechanical properties, increase high temperature capabilities and improve bearing performance.

PTFE is probably the most well-known thermoplastic after Nylon. PTFE has many trade names, TEFLON® for example. Renown for its corrosion resistance and chemical inertness, PTFE has many uses in pumps. Pump casings, impellers, seal faces, gaskets and "O" rings. Its wide temperature range, -250 to 250°C, makes it suitable for an extensive range of applica-

	ABS	cPVC	PB	HDPE	PP	uPVC	PVDF
Strength	high	high	very low	low	low	high	high
Impact resistance	high	low	high	high	high	low	high
Ductility	low	high	high	high	high	high	high
Temperature range	-40 to 60°C	0 to 80°C	-15 to 95°C	-40 to 60°C	-10 to 80°C	0 to 60°C	-40 to 140 °C
Fabrication	adhesive	adhesive	fusion welding	fusion welding	fusion welding	adhesive fusion welding	fusion welding
Suitable for:	hygienic high purity water potable water	alcohols mineral acids paraffinic HCs	hygienic potable water	acids alkalis inorganic solvents organic solvents direct sunlight	dilute acids alkalis organic solvents waste water water	acids alkalis hygienic potable water	aliphatic HCs, aromatic H's alcohols high purity water inorganic acids organic acids direct sunlight
Unsuitable for:	acetic acid alcohol petrol vegetable oil direct sunlight	aromatic HCs chlorinated HCs ketones organic solvents	direct sunlight	strong oxidising acids	aromatic HCs concentrated acids chlorinated HCs direct sunlight	aromatic HCs chlorinated HCs ketones	alkaline amines alkalis

Table 7.13 Typical properties of popular thermoplastics

LIBERTY EXHIBIT 1034, Page 242
This book belongs to Robert Durham (rdurham@thewaylabs.com)
Copyright Elsevier 2024

tions. Alloying, or sintering, with other compounds can extend the properties and applications of PTFE.

Typical additions include glass fibre, bronze, carbon, graphite, molybdenum disulphide and stainless steel. PTFE is also machined for the construction of pistons, bellows and other components which need to be corrosion resistant. It has the advantage of having a very low coefficient of friction and is generally not recommended for pumps designed for handling liquids containing abrasive solid particles.

PEEK is attracting attention because of its chemical resistance and physical properties. Some manufacturers are using it for wear rings, stuffing box bushings and valve plates.

Thermoplastics such as polyvinyl chloride (PVC), polypropylene (PP), polyethylene (PE) and PTFE are used as blow-moulded parts and also in sheet or tubular form for coating.

PTFE/FEP/PFA are chemically resistant to most liquids with the exception of a few chlorinated compounds, molten potassium and molten sodium.

Table 7.13 indicates some of the general properties of popular thermoplastics and limitations on use.

7.2.12.2 Thermosetting plastics

The following materials are typical thermosetting plastics:

- Alkyd
- Amino
- epoxides, epoxy resins
- furanes
- Melamine
- phenolic resins
- polyester
- polyurethane (PU)
- silicones
- urea
- vinyl ester resins

Thermosetting plastics are formed to the final shape during manufacture and the shape remains fixed until the material is destroyed.

As with thermoplastics, thermosetting plastics can be filled or reinforced with other materials. Asbestos, and other mineral fibres, together with cotton are often used. Great care must be taken when machining composites to avoid exposing the fibres to the process liquid. Selected parts of components can be treated and some surfaces can be inoculated with PTFE or graphite to reduce friction and wear.

Pump bodies and impellers are produced in GRP, glass reinforced plastic. A matrix of glass fibres is coated with epoxy resin, vinyl ester resin or phenolic. A chemical reaction between the two components of the resin, filler and hardener, causes the mixture to solidify. Many resin formulations are available including casting versions. Resins can be selected for broad chemical resistance. Epoxy resins can be used up to 98°C; vinyl ester up to 205°C.

Non-metallic materials are used because of their excellent corrosion resistance properties. However, the physical properties tend to be very inferior. Non-metallic materials cannot be considered as a direct replacement for metals. Figure 7.6 indicates the approximate design stresses for some popular materials compared to cast iron. Cast iron is a low strength metallic material. Novatron ® is a nylon alloy.

The low strength problem can be accommodated in several ways. For short production runs and special designs the major pump components can be machined from the solid. Figure 7.7 shows the construction of a small centrifugal pump. Most of the machining is straightforward; impellers which do not have radial vanes can present difficulties. The flanges are screwed on to the casing stub connections and then locked in position with adhesive. Machining from the solid is costly and time consuming. Non-metallic materials can be moulded in a similar way to casting metals.

Figure 7.8 shows the style of construction of a moulded pump. It is a style of construction which is used for many single-stage back-pullout centrifugal pumps. The bearing bracket would be made from cast iron and the shaft from steel. Neither are in direct contact with the process liquid. The moulded casing is supported by a cast iron housing. The housing performs two important structural functions. Casing distortion due to internal pressure is greatly reduced; alignment is improved and con-

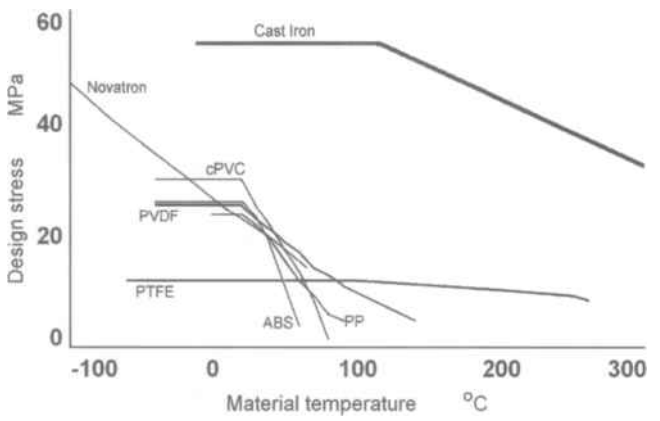

Figure 7.6 Temperature effects on material design stresses

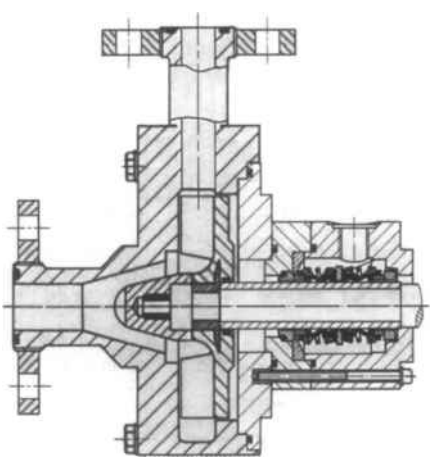

Figure 7.7 A typical small non-metallic centrifugal pump

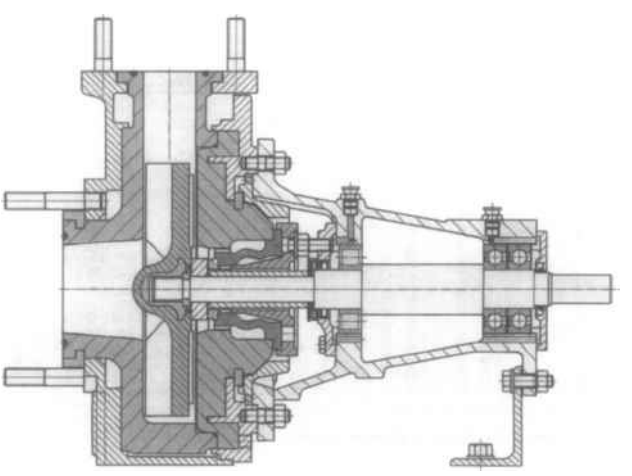

Figure 7.8 A typical moulded centrifugal pump

LIBERTY EXHIBIT 1034, Page 243
This book belongs to Robert Durham (rdurham@thewaylabs.com)
Copyright Elsevier 2024

Table 7.14 Comparative properties of elastomers

	PVC	NR IR	SBR	AU EU	IIR	PP	CR	XNBR	CSM	NBR	EPDM	EPM	HNBR	ETFE	ACM	FKM	VMQ	PTFE	FFKM	PFA	PI	PEEK
Low temperature °C	-35	-60	-50	-50	-30	0	-40	-30	-20	-45	-55	-45	-30	-100	-20	-15	-60	-250	-29	-250	-240	-18
High temperature °C	70	80	90	100	100	104	110	110	120	130	140	140	140	150	160	175	200	230	232/316	260	480	260
Abrasion resistance		E	G	E	F	G	G	E	E	G	G	E	E	G	F	G	P	P	P	P	E	
Tear resistance		E	P/F	E	G		G	E	E	G	G	G	E	F	F	F	P		F			
Gas permeability		H	L	M	L		L	L	L	L	L		L	L	L	L	L	L	L		M/H	
Compression set		E	G	G	P		E	G	F	G	G	F	E	G	P	G	G		G			
Resilience		E	F	G	P		G	F	P	F		P	F		F	F	P	P		P	P	
Coefficient of friction		H		H				L		L	L		L			H		L	L	L	L	L/M
Radiation resist		G	F	G	P		F	F	F	F	F		G		F	P	P	P	G	P	E	E
Weather resist		P	F	E	E		P	P	E	P	E	E	G	E	E	E	E	E	E	E	E	
Ozone resist	G	F	F	E	E		G	P	E	P	E	E	G	E	E	E	E	E	E	E		G
Sunlight ageing		P	P	E	E	P	E	P	E	P	E		G			G	G	E		E		
Mineral oil (LAP*)	P	F	P	G	U	P	F	E	G	E	P	P	E	G	E	E	P	E	E	G	G	G
Mineral oil (HAP**)	P	F	P	P	U	P	G	E	G	E	P	P	E	G	E	E	G	E	E	G	G	G
Silicone fluids	F	G	F	F	F	G	F	F	F	F	G	G	F		G	E	P	P/G	E	P/G		G
Diester fluids		P	P	G	G		P	P	P	P		P	P			G	F	G	G	G		
Phosphate esters		P	P	G	E	P	P	P	P	P	E/G	E/G	P	G	P	P	F	G	E	G		
Silicate esters		P	P	F	P	P	F	F	F	F	P	P	F		P	P	F	G	E	G	G	
Aliphatic hydrocarbons	E	P	P	E	P	G	F	G	G	G	P	P	G	G	P	E	P	E	E	E	G	G
Aromatic hydrocarbons	U	P	P	G	P	F	P	F	P	F	P	P	F	G	P	E	P	E	E	E	G	G
Halogenated solvents	U	P	P	P	P	F	P	P	P	P	P	P	P	E			P	E		E	P	G
Ketones	U	G/F	P	P	P	G	G	P	P	P	G	F	P	P	P	P	P	G	G	E	G	G
Aromatic petroleum	G	P	P	G	P	P	P	G	P	G	P	P	G	F	F	E	P	G	E	G	G	G
Non-aromatic petroleum	G	P	P	G	P	P	G	G	F	G	P		G	F	G	E	G	G	E	G		G
Dilute acid	E	G	G	G	G	E	P	P	E	G	G	E	G		P	G	F	E	E	E	P	G
Concentrated acid	E	F	P	P	F	F	P	P	G	P	G	E	G	G	P	G	P	E	G	E	F	G
Dilute alkali		G	G	P	G	E	G	F	G	G	E	E	G		P	G	F	E	E	E	P	G
Concentrated alkali		F	F	P	G	G	P	P	G	P	G	E	G			P	P	E		E	P	G
Cold water	G	E	E	G	G	G	F	P	G	G	E	E	E	E	U	G	F	E	E	E		G
Hot water	U	F		U	F	P	P	P	F	G	E	E	E	E	U	G	F	E	E	E	P	G
Steam	U	U	U	U	U	U	P	P	P/F	P	E	E	E	E	U	U	P	G	E	E		G

E = excellent, G = good, F = fair, U = unsuitable, H = high, M = medium, L = low (*LAP = low aniline point, **HAP = high aniline point)

This book belongs to Robert Durham (rdurham@ithewaylabs.com)

Copyright Elsevier 2024

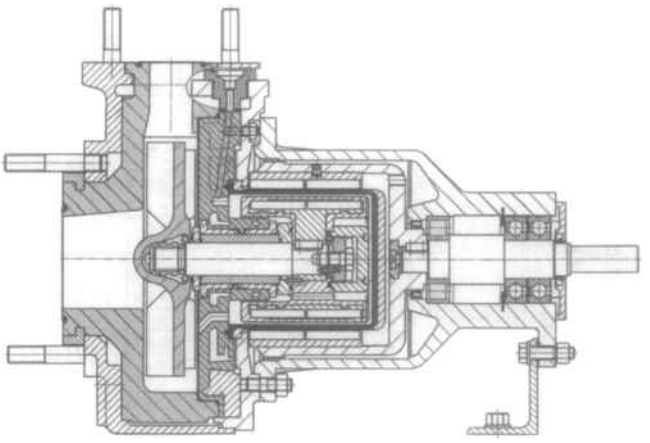

Figure 7.9 A typical magnetic drive non-metallic pump

trolled. Piping loads are transmitted through the housing to the baseplate. The corrosion resistant casing does not have to be designed to cope with external forces and moments. The low strength of the non-metallic casing is augmented by an external structural support. This concept can be used for the highest integrity centrifugal pumps, see Figure 7.9. Current advances in material technology allow the pressure containment "can", around the magnet assembly, to be made of ceramic.

7.2.12.3 Elastomers

Some elastomers occur naturally, natural rubber is the most obvious, others are manufactured for specific physical and chemical properties. The most popular elastomers are:

ethylene propylene (EP)(EPDM)(EPT)

fluoroelastomer (FPM)

natural rubber (NR)

NEOPRENE® (CR)

nitrile rubber (NBR)

perfluoroelastomer (FFKM)

silicone (Si)

styrene butadiene rubber (SBR)

urethane (AU)(EU)

Natural rubber is compounded with fillers and other materials and then vulcanised, heated with sulphur compounds, to produce a solid elastic material for processing. The hardness and chemical resistance being defined by the vulcanisation process. Modern materials have been developed for increased resistance to oils, sunlight and high temperatures.

Modern compounds are generally known by the registered trade name of the manufacturing company. Attempts have been made to standardise the nomenclature of generic groupings, ISO and ASTM abbreviations are used. The list below indicates the general progression to higher temperature operation and increased chemical resistance. Each individual case must be evaluated on its own merits.

NR, NBR, SBR Perbunan®, Buna N®, Buna S®

EPDM Dutral®, Vistalon®

FPM Viton®, Fluorel®

PTFE (thermoplastic) Teflon®, Fluon®

FFKM Kalrez®, Chemraz®

Some of the latest man-made compounds are very costly. Elastomer seals and gaskets can sometimes be replaced by metal parts. Silver plated stainless steel "O" rings are much more cost-effective than exotic elastomer compounds. An overview of elastomer properties is given in Table 7.14.

7.2.12.4 Ceramics

Ceramics are used in three forms in pumps – cast sintered and sprayed, see Section 7.2.13 for sprayed applications. Cast ceramic is manufactured just like pottery. A wet clay mix is poured into moulds and then fired. The resulting component is very hard and almost completely chemically inert. Industrial ceramics are not glazed like pottery and some grades exhibit slight porosity; this can be remedied by suitable sealants. Some ceramic compounds are sintered from granules to produce the desired shape. Machining to finished sizes is by grinding and lapping.

Silicon carbide, silicon nitride and alumina, aluminium oxide, are the most common ceramics. In rotodynamic pumps, silicon carbide is alloyed with silicon and carbon to produce mechanical seal faces and bearings in magnetic drive and canned pumps. In reciprocating pumps, alumina is used for plungers, bushings and ball valves.

7.2.12.5 Minerals

Asbestos used to be one of the most widely used minerals; an excellent gasket material for high temperature applications. Due to its unacceptable health hazards, asbestos is rarely used in its free state. Asbestos is used as a filler or reinforcing in some grades of thermosetting plastics and elastomers. Typical applications include dry running and product-lubricated plain bearings.

Carbon and graphite, because of their resistance to chemicals and low coefficients of friction, are used for mechanical seal components and product-lubricated bearings.

7.2.13 Coatings

Various pump components are coated to achieve different objectives. Coatings are applied to achieve corrosion/abrasion/wear resistance and running compatibility. Coatings can be applied by various techniques; brushed, dipped, physical vapour deposition, sprayed, weld deposit, vacuum fused and electroplated.

Like elastomers, coatings are best known by their trade names rather than by chemical composition or standard designations. Metallic, non-metallic and ceramic compounds are used for different applications. Table 7.15 lists sprayed coatings and indicates the major constituent.

Trade name	Major constituent
Stellite 6	cobalt
Stellite 12	cobalt
Colmonoy 5	nickel
Colmonoy 6	nickel
Metco 130SF	aluminium oxide/titanium dioxide
Colmonox	chrome oxide (dipped)
UCAR LW-15	tungsten carbide

Table 7.15 Common coating materials used in pumps

Colmonox is a dipped coating which is built up in several layers. Chemical treatment between dip cycles eliminates any porosity.

Pure elements, such as nickel and chromium, are deposited electrolessly for corrosion and wear resistance. Titanium nitride is applied by physical vapour deposition in a vacuum chamber. A very thin hard coating is applied to finished components without dimensional change. Thermoplastic materials can be applied to metal components to provide corrosion resistance and compatible bearing surfaces.

Coatings such as epoxy resins can be applied by brush. An extension of this idea is to incorporate solids within the resin. Glass beads have been used with great success.

Coatings are used extensively on new components such as:

shafts

LIBERTY EXHIBIT 1034, Page 245
This book belongs to Robert Durham (rdurham@thewaylabs.com)
Copyright Elsevier 2024

sleeves
wear rings
balance drums
bushings
plungers
piston rods
valve seats

Coatings can also be used to reclaim damaged or worn components. Coatings with glass beads have been used to repair pump casings. Worn shaft bearing lands can be reclaimed with hard chrome plate. Special nickel alloys are available to coat cast iron where wear has occurred.

7.3 Material strength and integrity

There are no international standard for hazards caused by liquids. National standards exist, see Section 4.7 in Chapter 4, but there is little agreement or correlation of test methods and permissible doses.

In Germany, for example, it is not permissible to pump petrol using cast iron pressure-containing components. In France all road petrol tankers have cast iron pumps. In general, most proprietary specifications do not allow the use of cast iron for flammable liquids. The strength of material used related to the working pressure and the level of integrity required for the material are both related to the perceived hazards and the cost of failure.

Ratings of pumps follow pipe flange ratings. ISO 7005 has flanges which are suitable for metric and inch sizes. The following nominal pressure ratings, barg, are covered:

2.5
6
10
16
20
25
40
50
110
150
260
420

Figures 7.2, 7.3 and 7.25 show that the strength of materials is dependent upon temperature. In ISO 7005, PN 50 refers to a set of dimensions, not a guaranteed pressure rating. With some specified materials, PN 50 flanges are only suitable for 42.5 barg at room temperature. PN 420 flanges are suitable for 431 barg in certain materials at room temperature. Some users and manufacturers will think 431 barg a very high pressure and of only academic interest. This is not so. Oilfield applications regularly operate at pressures over 400 barg and standard reciprocating pumps extend to 1000 barg.

High pressure pumps require high strength materials. If a pump casing was infinitely thick, the highest tensile stress would be in the bore and equal to the liquid pressure. If cast iron was used, the theoretical maximum allowable pressure, not considering fatigue, would be about 200 barg. As the wall thickness was reduced to economical proportions the maximum stress would increase. Figure 7.10 shows the stress values for a pump casing of 250 mm bore subjected to an internal pressure of 200 barg.

If it was necessary to have a wall thickness of only 10 mm then a much stronger material would be required, 13Cr alloy steel for example. If the casing was to be cast in 18/8/2 austenitic stainless steel, then the minimum wall thickness would be about 17 mm.

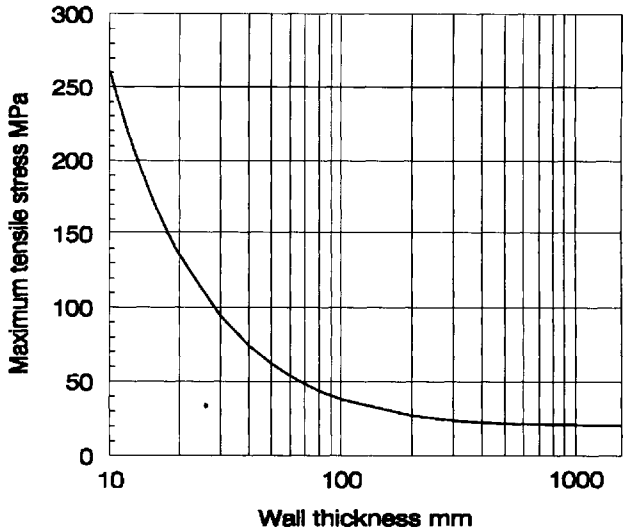

Figure 7.10 Casing tensile stress for various wall thicknesses

The design and manufacturing processes are complicated because of the vast range of materials available. Manufacture at constant thickness and vary the pressure rating; manufacture at various thicknesses for constant pressure rating. Obviously the cost of the material plays an important role as does the batch size.

For any given application the pump designer must ensure that the pressure retaining materials are thick enough and strong enough to withstand the loads and stresses imposed on the pump. The design process is further complicated by the imposition of corrosion allowances. The pump user may require material to be added in the bore to allow for corrosion and erosion, 3 mm is a typical value. When the pump is new, it is stronger than necessary. In the corroded condition, the casing will have reduced to the design thickness.

Integrity of pressure retaining parts is checked during production by hydrotesting i.e. pressure testing with water. Castings are only machined sufficiently to provide good seals and then hydrotested.

This first test is used to find casting weaknesses and porosity. The length of time a component must be held under pressure is a function of the material thickness. Thin casting can be checked in 10 minutes, heavier castings are usually tested for 30 minutes. Castings which fail this first test are evaluated to see if reclamation is cost effective. Depending upon the material, thickness, position and extent of fault, the casting will be reclaimed or scrapped.

For mass-produced standard pumps, the pump user has no control over this aspect of production. The pump manufacturer will have standard procedures to be adopted for various failure modes. All repairs implemented will be compatible with the published range of operations for that product. Repair techniques may include welding, impregnating, caulking, plating or plugging. Purchasers of standard products accept the manufacturer's warranty of suitability for service.

With pumps built specifically to order the situation is different. The purchaser may chose to limit the type of repair techniques used and also the extent of repairs. Pumps for hazardous liquids are generally not repaired by impregnating, caulking or plating. Plugging may be allowable if the thread in the bore can be seal welded. The purchaser may define repairs as "minor" and "major", depending upon the position and nature of the fault and the extent.

Minor faults may be repaired by agreed techniques, where the purchaser is informed of the location but production is not impeded. The agreed techniques include:

LIBERTY EXHIBIT 1034, Page 246
This book belongs to Robert Durham (rdurham@thewaylabs.com)
Copyright Elsevier 2024

- The inspection methods used to determine the extent of the fault and the qualifications of the operators
- The repair techniques to be used, approved procedures, including post repair heat treatment, and qualifications of staff
- Post repair inspection to prove the integrity of the repair

When a major fault is detected production stops, the purchaser is informed and nothing happens until the fault has been inspected by a representative of the purchaser. Then discussions between the two parties take place to decide if, and how, the fault can be repaired. One important part of any such discussion is the effect on delivery.

Castings will be hydrotested again in the fully machined condition, usually when the pump is fully assembled. This final pressure test assures that all material is sound and that bolted and screwed joints do not leak. Mechanical seals may or may not be fitted as agreed. Leakage through mechanical seals may or may not be permissible. Leakage through soft packed stuffing boxes must be permissible.

Although up until now have been discussed castings here but the same principles apply to fabrications and forgings. Forgings, however, should only be repaired with great reluctance, a "major" repair, and never in highly stressed regions. Cosmetic repairs can be made in any low stress zone which is not in contact with the process liquid.

The pressure at which hydrotests are conducted is subject to agreement and depends upon the design and construction and operating temperature. Small pumps tend to have suction and discharge flanges with the same pressure rating, so the complete casing may be tested at one pressure. Larger pumps may have a low pressure suction section and a high pressure discharge section here, the casing would be divided by a suitable diaphragm and tested at two pressures. It is not unusual for pumps to be fitted with high pressure suction connections when the suction pressure is low. The user and the manufacturer must agree whether the hydrotest pressure will be based on the suction pressure or the flange rating.

Some flange specifications, ISO 7005 and ANSI B16.5 for example, specify hydrotest pressures as part of the flange specification. In general the hydrotest pressure is 1.5 times the rated pressure. Components with standard flanges attached cannot be hydrotested at higher pressures. Other components, mechanical seals say, may limit the hydrotest pressure to a much lower value. Hydrotest pressures and pressure ratings must be clarified during the quotation stage. Individual components may be hydrotested at higher pressures than the assembled pump. There is no theoretical basis for having lower test pressures as the rated pressure increases. If the perceived hazard is as great, or greater because of the higher pressure, producing increased leakage through similar faults, the safety margins should be maintained across the pressure range. Mass-produced pumps may not be hydrotested in the final assembled condition; clarification from the manufacturer should be sort if problems with leaks occur at site.

Integrity can be interpreted in another manner, namely, design integrity. Design integrity, or proof testing, is when the manufacturer shows the basic design and construction to be sound. This problem arises particularly when corrosion allowances are added to pump casings. The proves the new casting is good, it does not show how the casting will react when it is 3 mm thinner.

A British standard BS 7929 addresses this theoretical problem of design proving. Calculation and physical testing are allowed. The manufacturer would show by calculation, computer model or finite element analysis, that stresses and strains in the "thin" component would not impair its ability for pressure containment and other essential functions.

Alternatively, the new "thick" component could be subjected to higher test pressures to create the stresses and/or strains which would exist in the "thin" component. For prototype pumps, and extensively modified standard pumps, discussions during the quotation stage should clarify the need, or otherwise, of design proving. Consideration must also be given to standard and prototype pumps which are designed and constructed to long established rules. There would be no point in forcing a manufacturer to produce a finite element analysis of a pump which had been operating successfully for twenty years.

7.4 Corrosion and erosion

7.4.1 Liquid corrosion of metals

The corrosion of metals in liquids is largely an electrochemical process, i.e. there is a positive electrode, the anode, and a negative cathode, between which an electric current will flow. If a ferrous component is immersed in acidic water, the anode-cathode process will occur over its entire surface. The cathode in this case comprises local elements of more noble metals in the galvanic series segregated in the alloying process, or non-metallic inclusions or by local reaction with oxides, sulphides and so on.

Metal is dissolved by the generation of metal ions at the anode. Oxygen dissolved in the liquid is reduced by the generation of hydroxyl ions, OH-, at the cathode, or in the absence of oxygen, hydrogen ions, H+, are used up in the generation of hydrogen gas. Where metallic and hydroxyl ions come into contact, corrosion products are generated, usually in several stages of chemical reaction. The final corrosion product usually comprises metal oxides, which are difficult to dissolve, or metal hydroxides. Corrosion products generate a more or less dense film on the surface.

The incidence of protective films resulting from corrosion, or those generated in other ways, are necessary as a rule for most metals in use in order that further corrosion should be inhibited, or contained within reasonable limits. Only the most noble metals, like gold and platinum, are immune within the greater part of the stable region of water.

Protective films can be removed by fast-flowing liquid. If a metal surface has a protective layer of corrosion products, this may be one of two types:

7.4.1.1 Porous, relatively thick films

These are the film on copper alloys and graphite on cast iron. Thick protective films often have complex constructions, because contaminants in the liquid, such as lime, may be included as a significant component. For this reason it is difficult to predict whether any effective film will be generated at all. At speeds normally found in centrifugal pumps, these films often have a limit, which is a step function, above which they get carried away by the flow of liquid. These films can be very successful in positive displacement pumps which operate at much lower liquid velocities. Positive displacement pumps use aluminium bronze or nickel aluminium bronze for seawater applications which require super-duplex stainless steels in centrifugal pumps. Thick films are relatively sensitive to solid particles, cavitation and even air bubbles in the flowing liquid. Even if such disturbance is sporadic, the damage may be great because the films take a relatively long time to regenerate, days or weeks even.

7.4.1.2 Dense, thin films

Examples are those passive films normally found on stainless steel, titanium and so on. The very dense and thin passive films usually consist of one single metal oxide only, for example chromic oxide on stainless steel. These films have very good adhesive qualities and are not removed even by very high liquid velocities.

LIBERTY EXHIBIT 1034, Page 247
This book belongs to Robert Durham (rdurham@thewaylabs.com)
Copyright Elsevier 2024

On the contrary, a flowing liquid tends to keep the film intact by preventing crevice corrosion and pitting. It is only when the flowing liquid contains solid particles or when flow conditions are such that cavitation occurs that a passive film will be damaged. Passive films usually regenerate quickly after damage and occasional penetrations by solid particles or cavitation do not usually lead to further corrosion. If, for any reason, a passive film does not exist on stainless steel, titanium and so on, then heavy corrosion attack can be expected.

Chemical reactions increase exponentially with temperature. As temperature increases, however, secondary effects can come into play, resulting in reduced corrosion. The oxygen content of water at atmospheric pressure decreases as temperature increases, thus reducing the corrosive effect on, for example, iron. If there is positive pressure, dissolved gases such as O_2 and H_2 will be present in the water even at high temperatures and will still influence corrosion.

When a centrifugal pump operates at closed valve, the absorbed motor power will be converted to heat in the pump, which rapidly causes high temperatures. Especially in the case of corrosive liquids, this can lead to heavy attacks because a passive film can be destroyed. Heating can also mean mechanical damage resulting in deteriorating material strength and properties. Plastic pumps are especially prone to softening with heat and should therefore be fitted with temperature sensors. Metallic pumps often use elastomer gaskets; overheating can result in leaks. When considering chemical attack and temperature ratings all pump components must be evaluated.

7.4.2 Corrosion rate

For a material to be considered in practice as being completely resistive, the material lost from the surface should not exceed about 0.1 mm per year. If the material losses are of the order of magnitude of 1 mm per year, the material can still be used but must obviously be checked at regular intervals.

Other chemical reactions occur at the cathode with certain other liquid-metal combinations. The chemical rule of thumb that a reaction speed doubles with a temperature increase of 10°C also applies to the corrosion process. Corrosion rates are expressed either as penetration depths or loss of weight per unit area per unit time. The conversion factors for some commonly used units are tabulated in Table 7.16. For depth of penetration, the conversion applies only to steel or substances of the same density.

Unit	Conversion factors		
	$g/m^2/h$	$g/m^2/day$	mm/year
1 $g/m^2/h$	1	24.0	1.12
1 $mg/dm^2/day$	0.004	0.10	0.0046
1 $mg/cm^2/day$	0.417	10.00	0.465
1 mm/year	0.890	21.4	1
1 mm/month	10.800	258.0	12
1 inch/year	23.0	554.0	25.4
1 mil/year	0.023	0.554	0.0254
1 $oz/ft^2/year$	0.035	0.84	0.0394

Table 7.16 Conversion of various units for corrosion rate (1 mil = 0.001 inch)

7.4.3 Types of corrosion

Units for rate of corrosion assume an even attrition over the whole surface, i.e. uniform corrosion. This often does not happen and other forms of corrosion can occur:

- Electrolytic (galvanic) corrosion, when different metals come into contact, or very close porximity, in the presence of a conducting medium.
- Crevice corrosion, in crevices and small confined spaces, where quantities of liquid may become more or less isolated from the main body of the liquid.
- Pitting, meaning that the corrosion is concentrated at certain points, pits.
- Intergranular or intercrystalline corrosion usually associated with redistribution of alloying elements during heat treatment or welding.
- Selective corrosion, where one single alloying element is dissolved out, e.g. dezincification in brass.
- Erosion-corrosion, which occurs in flowing media and is the commonest complication in pumps, see also Section 7.4.3.2.
- Stress-corrosion, where a combination of mechanical stress and attack by the liquid may lead to fracture.

Crevice corrosion and pitting are related phenomena, and are most troublesome for stainless steel in a chloride-containing environment. These attacks occur in crevices or holes where the conditions for setting up a protective film are absent because of screening from the surrounding solution. Special care must be taken in pumps to prevent crevice corrosion at rotor fixings or on shafts rotating within seals. The risk of crevice corrosion is reduced in flowing liquids. Crevice corrosion will not usually occur so long as the pump is working. During extended stationary intervals in chloride-containing liquids, however, the pump should be emptied and flushed out with clean water.

Corrosion fatigue is also important in pumps and especially for shafts. Even seemingly insignificant corrosion may reduce the fatigue strength of a material by a factor of 3 to 10.

7.4.3.1 Galvanic corrosion

Where there is a combination of different metals, galvanic corrosion may occur. This means that the less noble metal, the anode, has a higher corrosion rate than the more noble metal, the cathode, which is protected. An indication of the risks of galvanic corrosion can be obtained by studying the galvanic or electrolytic series, see Table 7.17. In practice, metals with a potential difference of 0.2V can be connected without any trouble.

CORRODED END - ANODE (Least noble)	Electrode potential V
Magnesium alloys	- 1.51
Zinc	- 1.09
Cadmium	- 0.73
Aluminium alloys	- 0.75 to - 0.64
Aluminium alloys, cast	- 0.70
Iron and steel	-0.55
Stainlesss steel, all types	-0.53
Lead-tin solder	-0.52
Lead	-0.51
Tin	-0.47
Nickel	-0.25
Inconel	-0.25
Titanium active	-0.25
Brass	-0.22
Copper	-0.22
Bronze	-0.22
Nickel-copper alloys	-0.20
Stainless steel, all types, passive	-0.15
Monel	-0.10
Silver solder	-0.07
Silver	- 0.05
Gold	+0.18
Titanium, passive	+0.19
Platinum	+0.33
PROTECTED END - CATHODE (Most noble)	

Table 7.17 Galvanic series for metals with potential values measured in seawater

Galvanic corrosion is of great significance in pumps because of the principle of using different materials for various parts, see Section 7.7.2. However, the effects of erosion-corrosion seem

LIBERTY EXHIBIT 1034, Page 248
This book belongs to Robert Durham (rdurham@thewaylabs.com)
Copyright Elsevier 2024

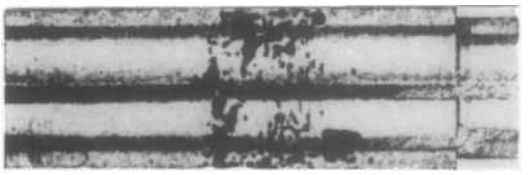

Figure 7.11 Extreme galvanic corrosion on 13Cr steel pump shaft

Figure 7.12 Erosion-corrosion on a 13Cr + Mo steel impeller

to create relatively wide departures from good practice from the galvanic corrosion point of view.

Where the anode surfaces are large and cathode surface is small, in the case of pump casings and impellers for example, the potential differences for certain favourable combinations can be twice as large.

Figure 7.11 shows a drastic case of galvanic corrosion. The shaft had been lying in stock fitted with graphite containing soft packing, the corrosion being caused by condensation from humid atmosphere. The attack has been accelerated by crevice corrosion.

7.4.3.2 Erosion-corrosion

Erosion-corrosion is particularly common in rotodynamic pumps where the flow velocity nearly always exceeds 20 m/s. Characteristic of erosion-corrosion are the horseshoe-shaped patterns scavenged in the direction of flow and bright surfaces free of corrosion products, see Figure 7.12. In this illustration the impeller was used for sulphate liquor. Note that the rivets are completely intact. These were made of SIS 2343. For this application the impeller should have been made of SIS 2343 or SIS 2324.

When metal comes under attack, oxidisation media O_2 or H+ for example, are consumed at the surface of the metal and metal ions are generated. Thus the concentration of metal ions will be greater and the concentration of oxidisation media will be lower at the metal surface than in the main body of the liquid, see Figure 7.13. The difference in concentration at the metal surfaces is dependent upon the difficulties in transportation of the participating compounds which is necessary for the continuation of the corrosion process.

Obviously the transportation will be aided and, at the same time the rate of corrosion will be accelerated, if the liquid is in motion, which is generally the case in pumps, (see Figure 7.17). Care should therefore be taken when using corrosion data from tests in stationary liquids for the selection of pump materials, since corrosive attack inside a pump may be ten times worse than it is in a still liquid. See also Figure 7.14, where at (Re_d)critical, the change over from laminar to turbulent flow occurs.

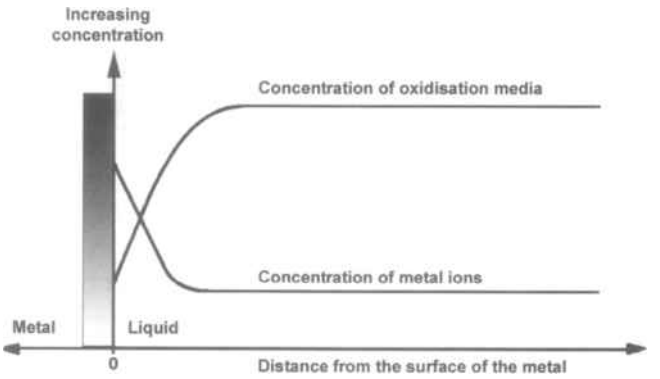

Figure 7.13 Concentration differences of general corrosion at a metal surface

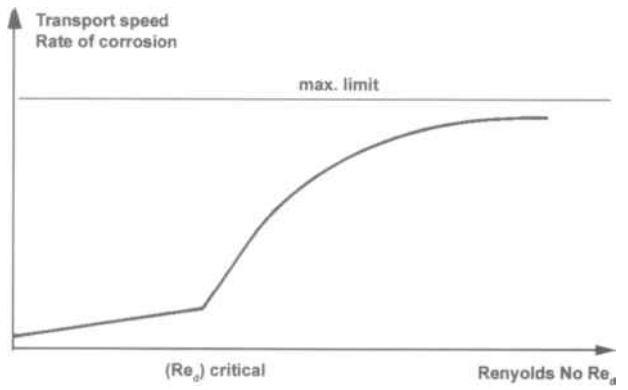

Figure 7.14 The principle of increased rate of general corrosion with liquid velocity.

7.4.4 Corrosion testing

Methods of corrosion testing in flowing liquids include:

- Pipe flow
- Rotating cylinder, freely rotating or enclosed
- Rotating disc
- Spraying a sample piece with a liquid spray.

If the purpose of the test is to determine the probable corrosion rate then the test rig should as far as possible resemble the condition intended to be tested. This is so that the test takes place at the same Reynolds Number, i.e. similar flow. Otherwise the result will only be a comparison between different materials.

When the corrosion test is intended for pumps, it would be advantageous to use an enclosed rotary disc at a speed such that the Reynolds Number is about the same as that for the pump impeller.

$$Re_d = \frac{u_2 d_2}{\mu} \qquad \text{Equ 7.1}$$

where:

u_2 = impeller peripheral velocity (m/s)

d_2 = impeller tip diameter (m)

μ = liquid viscosity (m^2/s)

Instead of rotating a complete disc of test material, small electrically connected samples can be set into the fixed wall opposite the disc, see Figure 7.15, which are then exposed to the same velocity as the rotating disc. This positioning of the sample pieces has the advantage that electrical measurements can be carried out simply, see Figure 7.16. Beside which, surfaces subjected to various liquid velocities can at least be of the same size. In a solid rotating disc, the larger part of the surface area is subjected to the highest liquid velocities, whereas in the pump

LIBERTY EXHIBIT 1034, Page 249
This book belongs to Robert Durham (rdurham@thewaylabs.com)
Copyright Elsevier 2024

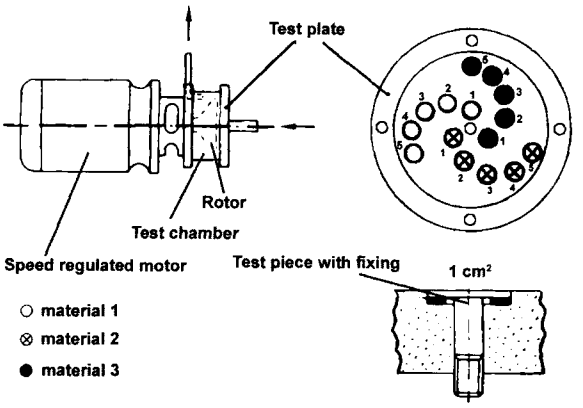

Figure 7.15 Corrosion test set

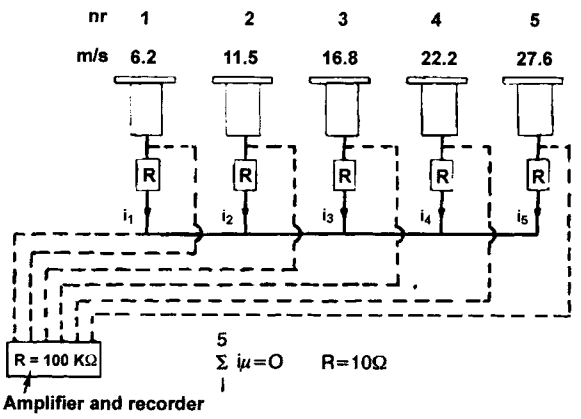

Figure 7.16 Electrical connection of test pieces subjected to various liquid velocities

the opposite is the case, because of the large surface area of the pump casing.

The test arrangements shown in Figure 7.15 and Figure 7.16 will resemble the corrosion process in a pump, since all the relevant liquid velocities are present simultaneously, and redistribution of metal losses due to galvanic currents will occur between parts of the same metal subjected to various liquid velocities.

The galvanic currents are among the items measured in corrosion testing, apart from the usual weighings, potential measurements and so on. If metal corrodes, there are actual electrolytic currents flowing between parts of the same metal surface subjected to differing liquid velocities. Thus, by recording the currents, it is possible instantaneously to check the occurrence of corrosion, and at the same time qualitatively to follow changes in the rate of corrosion, build-up of protective film of corrosion products etc. Unintentional changes in the rate of corrosion can also easily be recorded.

Materials generating thick protective films require relatively long test times, and worthwhile laboratory tests can be difficult to carry out since it is not easy to maintain control over the composition of the liquid over long periods of time. In these cases it is better to move the laboratory to the liquid rather than the other way round. When there are decidedly passive films generated normally on the test samples by contact with the air, it is best to remove this film, i.e. activate, in order to establish whether the passivity is restored in the actual liquid. After activation, passivity will be restored after only a short time, within hours, if it is going to be restored at all. If the general corrosion is uniform with time after a certain stabilising period, this is confirmed by the fact that the electrolytic currents also are uniform. The test time is then regulated so that stable conditions apply during as great a part of the time as possible.

Figure 7.17 shows some examples of test results using the set up shown in Figure 7.15.

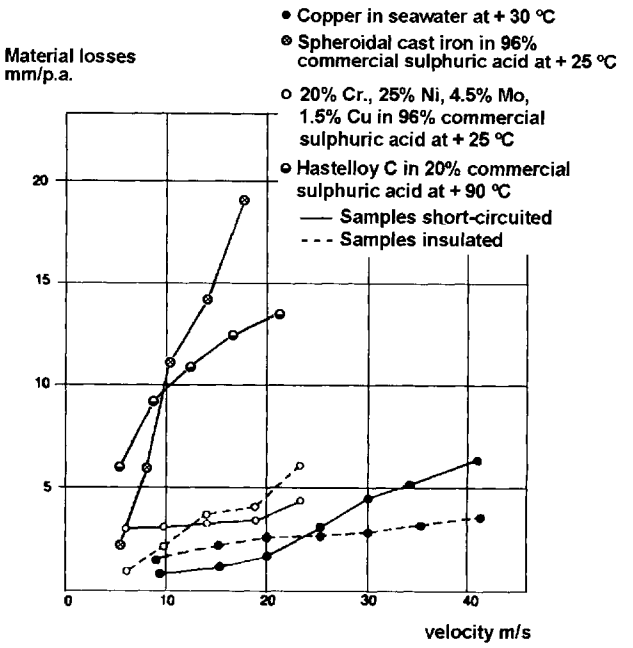

Figure 7.17 Onset of corrosion as a function of flow velocity

7.5 Abrasion resistant materials

7.5.1 Pump selection

Liquids containing solid particles can present considerable problems. To some extent the problems can be eased by choosing a pump design suitable for the abrasive conditions or reducing the velocities involved. Surfaces subject to wear can also be fitted with replaceable liners or designed with a good margin for wear. Examples of this are those pumps which are used for transporting abrasive solid materials such as ash, sand, asphalt, etc. In these pumps, not only are the wear margins large but even the pump shaft systems are designed to cope with the imbalance resulting from such wear.

Two main groups of material are used for abrasive liquids, hard metals and various types of rubber cladding. Wherever rubber cladding can be used, depending upon particle size and liquid temperature, it is superior to the hard metal materials. Hard metals can be used as coatings over normal metals. In this respect, hard coatings can be replaced to extend the lives of worn components. Ceramics are also very good but, so far, plastics have not given very good results.

Wear increases greatly with flow velocity for all qualities of material. Wear increases to a power of between 2.5 and 5 with velocity. This relationship infers that wear for a centrifugal pump with differential head H increases in the proportion $H^{2.5/2}$ to $H^{5/2}$. Delivery head per pump stage is limited therefore and is a maximum of about 50 m for rubber-clad pumps and about 100 m for pumps made of wear-resistant metals. Positive displacement pumps can produce pressure without recourse to high velocities. Positive displacement pumps are ideally suited for liquids with high concentrations of solids because these liquids assume an apparent high viscosity. High viscosity reduces the efficiency of rotodynamic pumps.

7.5.2 Hard metallic materials

The following applies to hard materials, mainly steel with a high carbon and chromium content:

- Material losses increase greatly when the hardness of the particles is greater than the material in the pump or liner.
- Material losses increase with the size and mass of the particles.

LIBERTY EXHIBIT 1034, Page 250
This book belongs to Robert Durham (rdurham@thewaylabs.com)
Copyright Elsevier 2024

- Material losses increase if the particles have sharp edges and the particle material has sufficient strength to maintain the edges.
- Material losses increase as the particle concentration increases.
- Wear-resistance is improved by increasing the hardness of the pump material, but this effect can only be significant if the pump material hardness figure exceeds about 300 BHN. (If Miller Number test results are corrected for soft materials, normal carbon steel for example, a multiplier of over 1000 is required.)
- Combination of general hardness in the pump material with wear-resistance in individual elements in the pump material is a good thing. Examples of this are Ni-Hard, a martensitic chromium steel, where the wear-resistance is obtained from chromium carbide granules embedded in a hard matrix.

7.5.3 Rubber cladding

The wear-resistance of rubber cladding is due to the fact that solid particles more or less bounce on the rubber surface without actually damaging it. It should be pointed out that:

- Soft rubber is better than hard rubber.
- Rubber gives favourable results if the particles strike the surface at right-angles, angle of incidence 90°, or if they move along the surface of the rubber. If the angle of incidence lies between 5° and 30° the results will be much less favourable.
- The thickness of rubber should be 2 or 3 times the size of the particle in order to exploit the bouncing effect.
- Sharp particles can cut the surface of the rubber to pieces.

Natural rubber is suitable for temperatures up to 70°C, whilst nitrile rubber can be more suitable when mineral oil contaminants are present, although it is not so wear-resistant. Urethane rubber has become popular for parts of pumps used for abrasive pumping for temperatures up to about 50°C, see Figure 7.18.

Urethane rubber has excellent wear properties and good resistance to oils, but polyester-based compounds are sensitive to hydrolysis. In this respect, polyester based urethane rubber, Adiprene® is better. Typically, urethane rubbers are considerably higher in price than natural rubber; however, this is compensated for by a simpler manufacturing process involving forming in open moulds.

Glass beads set in resin have been applied to various metal casing parts to protect against corrosion and erosion.

7.6 Materials resistant to cavitation damage

When cavitation occurs inside a pump, the vapour bubbles implode resulting in local pressure waves up to about 10000 MPa. Implosions close to a metal surface in a pump impose repeated loads on the surface with the result that fragments of material are loosened. Cavitation damage thus has a characteristic appearance, see Figure 7.19. The surface becomes rough and pitted in appearance, and is limited to those zones in a pump where low pressure can occur. If cavitation is allowed to persist then severe material loss can occur, see Figure 7.20.

In reciprocating pumps the continuous action of the repeated implosion loads cause fatigue failures in important components. The classic failures include:

- Suction valve plates
- Liquid end studs

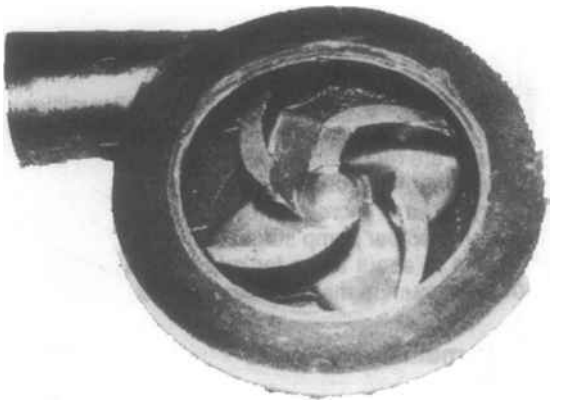

Figure 7.18 Pump impeller made of urethane coated steel and pump casing of solid urethane rubber

- Cylinders

If cavitation damage has been caused in a pump, the first thing to do is to improve the NPSHa/NPIPa of the installation by:

- Increasing the available suction head or pressure or reducing the suction lift
- Lowering the temperature of the liquid in the pump intake either by direct or indirect cooling

If neither of these actions is feasible the pump speed should be reduced with production consequences. If this is not feasible or if the cavitation process is purposely used for regulation, as is the case for certain condensate pumps, then a cavitation-resistant material must be used.

A choice can be made by studying the results of comprehensive experiments, see Figure 7.21, which shows that it takes a certain amount of time before cavitation damage appears. The process is similar to the incubation time for some infectious diseases.

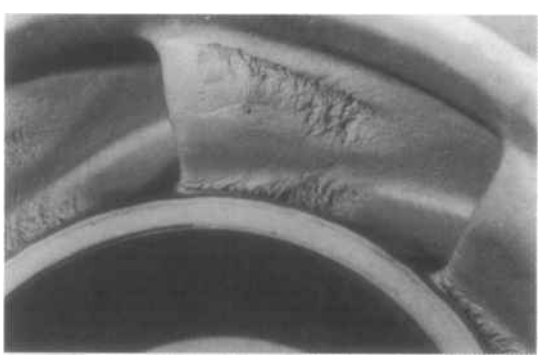

Figure 7.19 Typical cavitation damage of pump impeller

Figure 7.20 Severely damaged pump impeller

LIBERTY EXHIBIT 1034, Page 251
This book belongs to Robert Durham (rdurham@thewaylabs.com)
Copyright Elsevier 2024

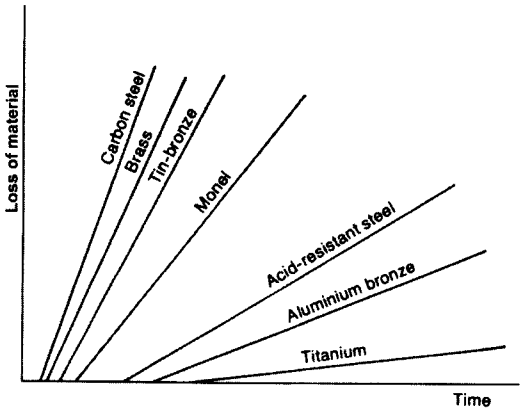

Figure 7.21 The resistance of various materials to cavitation damage

7.7 Material selection

7.7.1 Basic information

A review of preliminary material choice can be found partly in Section 2.2, Chapter 2, and partly in Section 7.7.3. This information enables the selection of materials suitable for a wide range of liquids. In more specific cases, it is recommended that a study should be made of special literature such as that referred to in Section 7.8. It is, however, inevitable that even this background will not be adequate in many special cases, so that judgement has to be made based on practical experience of similar cases. The information required for choice of material has been collected in Table 7.18 in the form of a check list.

It is the users'/purchasers' responsibility to provide all relevant data to allow pump type and material selection to be accomplished. Successful pump operation depends upon the initial decisions made. Decisions based on incorrect or incomplete data will tend to be suspect.

The pump manufacturer cannot be held responsible for wear or corrosion resulting from inappropriate decisions based on incomplete or incorrect information. The manufacturers warranty will be invalidated.

Liquid
Full description
trade name, chemical formula, concentration
hazardous/flammable/toxic
controlled by legislation
abrasive/corrosive
all constituents including any trace elements
vapour pressure
viscosity
viscosity characteristic with shear
compressibility
solidify temperature
crystallisation temperature
SG/Cp/pH
Liquid contaminants
dissolved/entrained gas release pressure
solids
size/concentration distribution
hardness
rigid/deformable/friable
abrasiveness (Miller Number)
Operating conditions
max/min temperature
max rate of temperature change
max/min pressures
max/min flow
respective NPSHa's/NPIPa's
continuous or intermittent
Liquid
time between routine maintenance
stand-by cycles
full of product/flushed
hazards during stand-by
dry running
Special requirements
hygienic
sterile
allowable contamination of liquid
cleaning of pump
chemical/steam
Environment
Site conditions
indoor/outdoor/onshore/offshore
attended/unattended operation
min/max ambient temperature
max black bulb temperature
min/max relative humidity
altitude
hazardous area classification
atmospheric pollution
allowable product leakage rate
conditions during transport if different to site
Material
User/purchaser material recommendations
recommended materials
prohibited materials
Physical properties
strength
ductility
impact resistance
creep resistance
erosion resistance
thermal shock resistance
Chemical properties
resistance to corrosion
corrosion allowance
predicted life

Table 7.18 Check list for material choice

7.7.2 Material combinations

In a pump some components more than others are subjected to stress, therefore it is natural that these should be made of better materials. Some are subject to compressive stress and others tensile. Some components are pressure retaining while others are completely surrounded by liquid or are external to the pressure boundary. Some components are subject to dynamic stressing with obvious considerations to fatigue.

It may also be necessary for parts which are in permanent or occasional contact to have good bearing properties. This is the case in displacement pumps, plungers and bushings or pistons and liners, or with wear rings and balance drums in centrifugal pumps. Generally speaking, the materials should differ completely, but if they are the same, their hardness should differ by at least 50 BHN.

There is a certain established practice for combinations of materials in centrifugal pumps. This requires that the pump impeller and sundry small parts should be made of better material than the casing. In the case of shafts, attention must be paid to corrosion fatigue, which occurs with relatively small corrosive attacks and, in time, causes the shaft to fail. An alternative is to seal off the shaft completely from the liquid.

There are several different impeller materials for use with the simplest pump casing material grey cast iron, as shown in Table 7.19.

LIBERTY EXHIBIT 1034, Page 252
This book belongs to Robert Durham (rdurham@thewaylabs.com)
Copyright Elsevier 2024

Table 7.19 also shows the relative costs of the various materials. This shows an approximate picture only of price levels, since the cost ratios depend on size of pump, basic prices for the various metals and so on. If the shaft is protected against the liquid, it can be made of lower grade metal.

Wear ring material combinations are listed in Table 7.20. When the impeller is made of grey cast iron, there is a risk of rusting after a test run, or whenever the pump is stationary. A better choice of material for the impeller would be gunmetal, plastic or stainless steel. If the pH value of the liquid is more than about 8 to 9 then gunmetal is not sufficiently resistant.

Casing	Impeller	Shaft	Approx. relative cost
Grey cast iron	Grey cast iron	Stainless steel	0.97
Grey cast iron	Gunmetal	Stainless steel	1.0
Grey cast iron	Plastic	Stainless steel	0.95
Grey cast iron	Stainless steel	Stainless steel	1.08
SG iron	Stainless steel	Stainless steel	1.25
Cast steel	Grey cast iron	Steel	1.1
Cast steel	Cast steel	Steel	1.2
Cast steel	Bronze	Steel	1.25
Cast steel	13Cr steel	Steel	1.3
Cast steel	Stainless steel	Stainless steel	1.5
Cast steel	Super stainless steel	Super stainless steel	2.0
13Cr steel	13Cr steel	13Cr steel	1.4
13Cr steel	13Cr steel	Stainless steel	1.4
Stainless steel	Stainless steel	Stainless steel	1.8
Super stainless steel	Super stainless steel	Super stainless steel	3.0
Hastelloy C	Hastelloy C	Hastelloy C	4.0
Titanium	Titanium	Titanium	10

Table 7.19 Some commonly used material combinations for centrifugal pumps

Casing wear ring	Impeller wear ring
Cast iron	Cast iron
Ni-resist	Ni-resist
Bronze	Bronze
13Cr steel	13Cr steel
Stainless steel/Colmonoy 6	Stainless steel/Colmonoy 5

Table 7.20 Standard wear ring material combinations

Rotary positive displacement pump materials are so varied it is not wise to try to generalise. Reciprocating pumps have evolved to a point where manufacturers offer very similar material groups. Table 7.21 lists cylinder materials in ascending order of corrosion resistance.

Low pressure	High pressure
Carbon steel	High tensile steel
Cast iron	
28Cr iron	28Cr iron
Aluminium bronze	Nickel aluminium bronze
AISI 304/CF-8 stainless steel	N_2 strengthened austenitic stainless steel
AISI 316/CF-8M stainless steel	N_2 strengthened austenitic stainless steel
Super stainless steel	Super stainless steel

Table 7.21 Reciprocating pump cylinder materials

7.7.3 Corrosion resistance

From the corrosion point of view the choice of materials is made from two entirely different viewpoints:

- The material selected must last the intended life of the pump.
- The material should also be such that the liquid handled by the pump is not contaminated. Examples of the effects on processes can be any thing from rusty water in a drinking water installation, to "poisoning" of catalysts in a chemical process because of corrosion products from the pump. Hence the process effect can rule out some materials in certain cases, even though they, in themselves, have an adequate resistance to corrosion.

When it comes to corrosion from chemicals in aqueous solutions, it is the pH value and the liquid temperature which provide a preliminary guideline for choice of materials, see Table 7.22.

pH	Material
0 - 4	Stainless steel
0 - 4	Nickel alloy
0 - 4	Silicon iron
0 - 4	Plastic
4 - 6	Bronze
4 - 6	Stainless steel
6 - 9	Grey cast iron
6 - 9	Non-alloyed steel
6 - 9	Bronze
9 - 14	Stainless steel
9 - 14	Nickel alloys
9 - 14	Plastic
9 - 14	Grey cast iron

Table 7.22 pH value and choice of material for water 0°C to 50°C

At very low and very high pH values, i.e. with strong acids or strong alkalis, the resistance of the various materials must be studied more closely, e.g. by the use of corrosion tables and diagrams, and also the literature listed in Section 7.8.

Table 7.23 reviews the typical fields of application for various materials. See also the respective descriptions of materials in Section 7.2. Within the pH range 6 to 9, grey cast iron is the most commonly used material. Exceptions are certain salt solutions, mainly chlorides, seawater for example, where bronze is used with acceptable results. For the use of grey cast iron for ordinary cold water see also Section 2.2, Chapter 2.

When a material is not completely resistant to a liquid, the effect of dissolved or solid contaminants, from erosion and cavitation and occasional temperature increases, can be important. This effect can mean that practical performance may vary from installation to installation.

Materials	Applications
Steel	De-aerated hot water, boiler feed pumps
SG iron Nodular iron	As above. Better resistance to corrosion at high liquid velocities than cast steel but not as good as cast iron
Grey cast iron	Has good resistance to many liquids assuming the graphite film is not damaged by high velocities, aeration, cavitation or solids. 120°C max, pH >5.5
13Cr steel	De-aerated hot water, boiler feed pumps 350°C depending upon O_2 treatment A good replacement for steel for temperatures over 200°C, better thermal stability, higher pressure capabilities
Silicon iron » 14Si	Resistant to acid corrosion, HCl, H_2SO_4, and strong salt solutions. Not suitable for thermal shock
Ni-resist 20Ni 3Cr	Hot , seawater
Gunmetal, bronze	Salt water, seawater, brine and other moderately corrosive water solutions. Al bronze and NiAl bronze better than tin bronze in seawater. NiAl bronze for higher pressures
Monel	seawater, brines
Austenitic stainless steels	Boiler feed water, general corrosive applications, poor in chloride solutions
SIS 2324, SIS 2343	Good for high velocity applications. Not recommended for some acids and chloride solutions
Alloy 20	Better resistance to acids and chlorides
Hastelloy C	Very resistant to corrosion. For H_2SO_4 at all concentrations and moderate temperatures. Dilute HCl, strong chloride solutions at higher temperatures
Titanium	Chloride solutions, chlorine dioxide and other liquids for bleach manufacture
Non-metallic materials	Acids, alkalis, corrosive reagents and solvents at moderate temperatures. Some also resistant to solid erosion. Temperature and pressure limitations

Table 7.23 Materials for centrifugal pumps and their main areas of application

LIBERTY EXHIBIT 1034, Page 253
This book belongs to Robert Durham (rdurham@thewaylabs.com)
Copyright Elsevier 2024

7.7.4 Corrosive effects of unknown materials

In some cases it is practically impossible to specify the liquid to be pumped. A typical example would be the various residues and effluent from the plating industry. In this case, the only known conditions may be that the liquid contains troublesome constituents of chlorides, acids and perhaps even hydrofluoric acid, and that the corrosion resistance of materials available at reasonable cost levels will be inadequate. The problem is further complicated if the liquid also contains solid abrasive particles.

Problems of this type have to be resolved by the use of common sense and a certain amount of experimentation during the early operational period. When the corrosive effects of liquids are uncertain, it is not only the pumps which will give problems. Pumps do not work without pipework. Pipework may have flanged or screwed connections. An early decision on the connection type and other hazards may help solve this dilemma and will prove very educational.

Many installations require tanks and these are often not easy to change once production has started. The pumps may prove to be a minor problem compared to the other parts of the installation. Here are some factors worth noting:

- Any particles should be separated if possible before the pump. If this is feasible, then various plastics for example would make a good choice in this instance. But if solid contaminants are present, then a metallic material should be chosen, such as silicon iron, chrome iron or the highest grade of high alloy stainless steel that is considered to be economically viable. Perhaps a rubber lined pump may be suitable.
- If possible, corrosion tests should be made on small material samples. The samples should be suspended where they can be retrieved and in such a way that galvanic corrosion does not take place.
- Choice of pump supplier should be made so that several alternative materials can be obtained for the component parts. In this way, individual parts or even the whole pump, can be replaced with better materials in the event of unexpected corrosion damage. Pump internals can usually be replaced easily. A long lasting casing can have many sets of internals. Internal pump corrosion does not lead to external leaks. The best casing and seal possible should be used.
- Since some experimental error may occur, the pump installation should be set up with both pump servicing and the consequences of breakdown firmly in mind.
- When practical operational results are available later, it will then be easier to optimise the economic choice of materials, balancing useful life and procurement costs of various materials.

7.8 Conclusions

Successful pump applications rely on good communications with the pump manufacturer. The system designer should hold preliminary discussions with several manufacturers about the most suitable pump type and the possible alternatives for materials. Pump manufacturers have plenty of experience with many liquids and are able to offer advice on many processes. As can be seen from Chapter 1, there are many different pump types. Materials that work successfully in one pump type may not be successful in a different pump type.

Pumps are never installed in isolation; there are always pipes and valves. Valve manufacturers also have much experience with many liquids. But a valve is not a pump and valve materials may not be the best choice. Accurate operating condition definitions are the keys to success. The sources in Section 7.9 are suggested for additional guidance on material selection.

7.9 Useful references

Meehanite Worldwide Corporation, IMMCO House, 38 Albert Road North, Reigate, Surrey, RH2 9EH UK, Tel: 01737 24478, Fax: 01737 226644,
Email: immco@meehanite.fsnet.co.uk, www.meehanite.co.uk

ASME International, Three Park Avenue, New York, NY 10016-5990 USA, Tel: 973 882 1167,
Email: infocentral@asme.org.

American Institute of Chemical Engineers (AIChE),3 Park Avenue, New York, NY 10016-5991 USA, Tel: 212 591 8100, Fax: 212 591 8888, www.aiche.org

American Petroleum Institute (API), 1220 L Street, NW, Washington DC 20005-4070 USA, Tel: 202 682 8000, www.api.org

American Iron and Steel Institute AISI, 1140 Connecticut Avenue, NW Suite 705, Washington, D.C. 20036 USA, Tel: 202 452 7100, www.steel.org.

Steel Founders' Society of America (SFSA), 780 McArdle Drive, Unit G, Crystal Lake, IL 60014 USA Tel:815 455 8240, www.sfsa.org.

The Institute of Materials, Minerals and Mining (IOM3), 1 Carlton House Terrace, London, SW1Y 5DB, UK, Tel: 020 7451 7300, Fax: 020 7839 1702, www.iom3.org.

Energy Institute, 61 New Cavendish Street, London, W1G 7AR, UK, Tel:020 7467 7100 Fax:020 7255 1472, www.energyinst.org.uk.

Institution of Chemical Engineers, Davis Building, 165-189 Railway Terrace, Rugby CV21 3HQ UK, Tel: 01788 578214, Fax: 01788 560833, www.icheme.org

The Plastics Institute of America Inc., University of Massachusetts, Lowell , 333 Aiken Street, Lowell, MA 01854-3686 USA, Tel:978 934 3130, Fax: 978 458 4141 Email:info@ plasticsinstitute.org, www.plasticsinstitute.org.

The British Plastics Federation, 6 Bath Place,Rivington Street, London EC2A 3JE UK, Tel: 020 7457 5000, Fax: 020 7457 5045, Email: bpf@bpf.co.uk, www.bpf.co.uk.

NACE International (Formerly The National Association of Corrosion Engineers) 1440 South Creek Drive, Houston, Texas 77084-4906 USA , Tel: 281 228 6200, Fax: 281 228 6300, www.nace.org.

Rapra Technology Ltd (Independent plastics and rubber specialist organization), Shawbury, Shrewsbury, Shropshire SY4 4NR UK, Tel: 01939 252413, www.rapra.net.

Royal Society of Chemistry, Burlington House, Piccadilly, London W1J 0BA UK, Tel:020 7437 8656, Fax: 020 7437 8883, www.rsc.org.

American Chemical Society, 1155 Sixteenth Street, NW, Washington, DC 20036 USA, Tel: 202 872 4600, Fax: 202 776 8258, www.chemistry.org.

National Metals Technology Centre Ltd, Swinden House, Moorgate Road, Rotherham, Yorkshire S60 3AR UK, Tel:01709 724990, Email: info@namtec.co.uk, www.namtec.co.uk

Stainless Steel Advisory Service, Broomgrove, 59 Clarkehouse Road, Sheffield S10 2LE UK, Tel: 0114 267 1260, Fax: 0114 266 1252, Email: enquiry@bssa.org.uk, www.bssa.org.uk.

ASM International (The Materials Information Society), 9639 Kinsman Road , Materials Park, OH 44073-0002 USA, Tel: 440 338 5151, Fax: 440 3384634,
Email: customerservice@asminternational.org, www.asminternational.org.

LIBERTY EXHIBIT 1034, Page 254
This book belongs to Robert Durham (rdurham@thewaylabs.com)
Copyright Elsevier 2024

TEMA (Tubular Exchanger Manufacturers Association), 25 North Broadway, Tarrytown, NY 10591 USA, Tel: 914-332-0040, Fax: 914-332-1541, Email: tema@tema.org, www.tema.org.

National Centre of Tribology, ESR Technology Ltd, 410 Whittle House, Birchwood Park, Warrington, Cheshire, WA3 6FW UK, Tel: 01925 843410, Fax: 01925 843500, Email: nct.tribology@esrtechnology.com, www.esrtechnology.com.

Corrosion Resistance of Metals and Alloys, Monograph 158, F. LaQue, H. R. Copson, Reinhold Publishing Co., New York, 1963.

Uhlig's Corrosion Handbook, 2nd Edition, R. Winston Revie (editor), John Wiley & Sons, December 2005, ISBN 0-471-78494-X.

An Introduction to Corrosion and Protection of Metals, Gösta Wranglen, 1985, Frank Amato Publications, ISBN 0412260409.

Corrosion Data Survey — Metals Section, 6th Edition, Edited by D. L. Graver, 1985, NACE, USA, ISBN 0-915567-07-5.

DD 38:1974 Recommendations for cast materials for use in the pump industry, BSI. (Withdrawn but worth reviewing).

BS PD 5500:2006 Specification for unfired fusion welded pressure vessels.

BS 7929:1999 Guide for the verification of a pump casing design procedure.

EN 13445 Unfired pressure vessels.

EN 603-2:1997 Aluminium and aluminium alloys. Wrought forging stock. Mechanical properties.

EN 603-3:2000 Aluminium and aluminium alloys. Wrought forging stock. Tolerances on dimensions and form.

LIBERTY EXHIBIT 1034, Page 255

This book belongs to Robert Durham (rdurham@thewaylabs.com)

Copyright Elsevier 2024

Welcome to our sealing world
www.burgmann.com

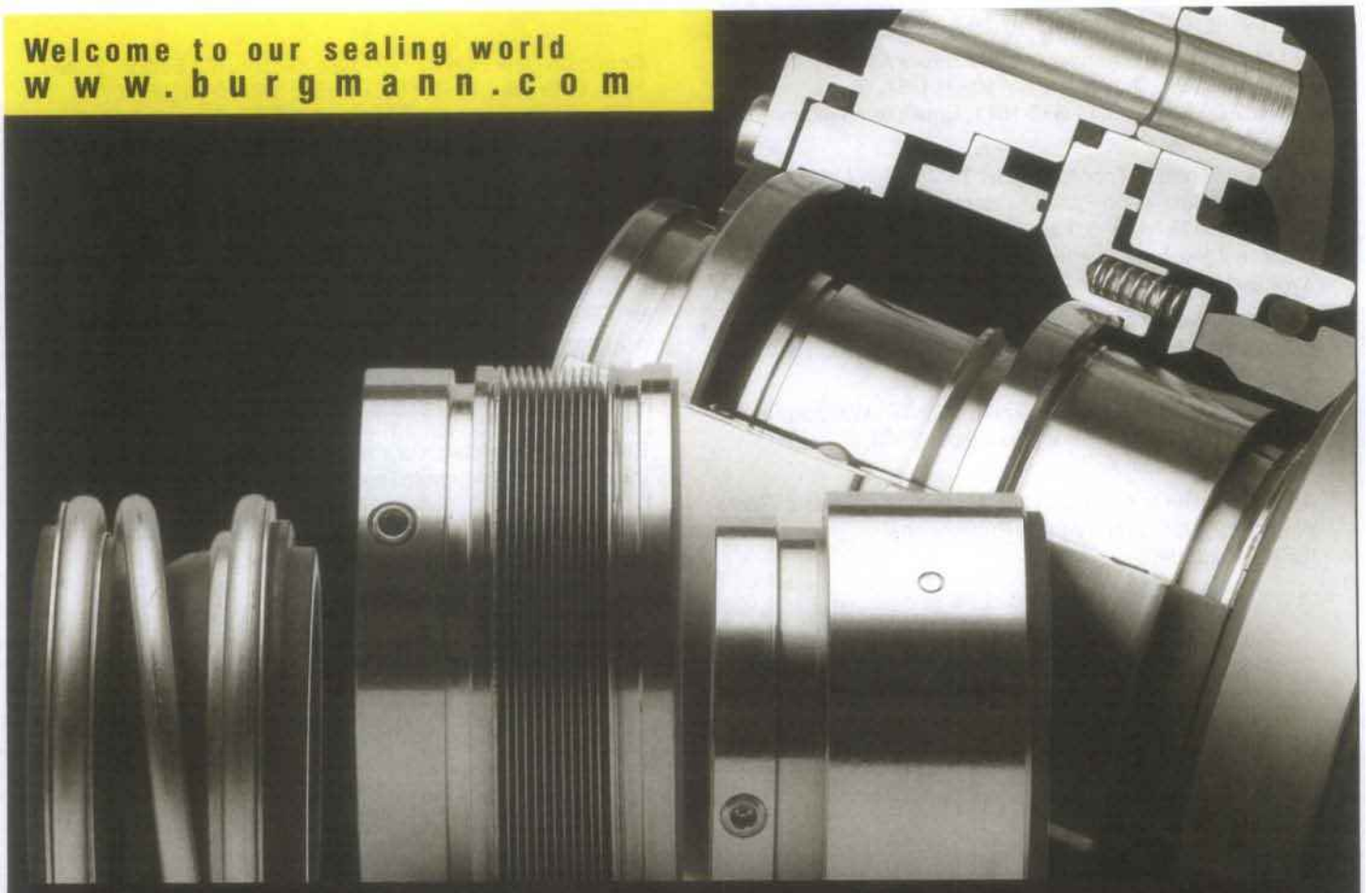

The security factor against leakage - if you've got it you've got it

Burgmann mechanical seals are one of the best things you can do for your pumps, mixers or compressors as regards function, leakproof operation and thus environmental protection.
Our mechanical seals rank among the best in the world. Approved quality, a comprehensive service network and our wealth of experience should make it even easier for you to choose.

Leakproof for a clean environment.

EBI
The worldwide
Alliance for Sealing Technology

Burgmann®

Burgmann Industries
GmbH & Co. KG
D-82502 Wolfratshausen
Tel. +49 / 8171 / 23-0
Fax +49 / 8171 / 23 10 95

This book belongs to Robert Durham (rdurham@thewaylabs.com)
Copyright Elsevier 2024

Process seals and sealing 8

8.1 Introduction

8.2 Rotary shafts

8.2.1 Non-contacting seals

8.2.2 Lip seals

8.2.3 Hover seals

8.2.4 Auxiliary pumps

8.2.5 Soft packing

8.2.6 Mechanical seals

8.3 Process liquid seals for rotary shafts

8.3. 1 Soft packing

8.3.1.1 Operating principles

8.3.1.2 Design variations

8.3.1.3 Packing material

8.3.1.4 External systems

8.3.1.5 Maintenance

8.3.1.6 Trouble-shooting

8.3.2 Mechanical seals

8.3.2.1 Operating principles

8.3.2.2 Surface flatness

8.3.2.3 Design principles

8.3.2.4 Temperature considerations

8.3.2.5 Design variations

8.3.2.6 Materials

8.3.2.7 External systems

8.3.2.8 Maintenance

8.3.2.9 Trouble-shooting

8.4 Reciprocating rods

8.4.1 Lip seals

8.4.2 Soft packing

8.5 Process liquid seals for reciprocating rods

8.5.1 Operating principles

8.5.2 Design variations

8.5.3 Packing material

8.5.4 External systems

8.5.5 Maintenance

8.5.6 Trouble-shooting

8.6 Process liquid seal selection

8.6.1 Process liquid

8.6.2 Size, speed and pressure

8.6.3 Local environment

8.6.4 Cost

8.6.5 Standardisation

8.7 Useful references

LIBERTY EXHIBIT 1034, Page 257

This book belongs to Robert Durham (rdurham@thewaylabs.com)

Copyright Elsevier 2024

8.1 Introduction

The seal is the most vulnerable element in a pump and it is well worth devoting a great deal of attention to its choice, style, installation and maintenance. By this means the cost for spare parts and repairs as well as leakage and down-time costs can be kept to a minimum. As well as the initial purchase cost, consideration must be given to the amount and type of leakage which **will** pass through the process seal while operating. The leakage, liquid or vapour, may pose a variety of hazards; toxicity, flammability, health, radioactivity, environmental; or may simply be unpleasant. If vapour is released it is essential to know whether the vapour is heavier or lighter than air.

The effects on personnel, local environment and global environment must be considered thoroughly. Many hazardous liquids are controlled by strict legislation. The penalty for illegal pollution may be very severe. The purchaser should be aware of all the implications of handling each specific liquid so that meaningful discussions can be held with the relevant safety authorities, the pump manufacturer and the seal manufacturer. The purchaser must inform the suppliers of any peculiar local regulations which are applicable.

The methods normally used for sealing shafts and reciprocating rods are:

- Lip seals
- Soft packings
- Mechanical seals, (rotary only)

In the special case when the liquid is so hazardous that leakage cannot be tolerated under any circumstances and the risk of seal failure is unacceptable, the following pump classifications in Chapter 1 should be consulted:

- Magnetic drive and canned motor rotodynamic pumps
- Peristaltic and rotary peristaltic pumps
- Diaphragm and air-operated double diaphragm pumps
- Metering pumps
- Direct-acting reciprocating pumps
- Ejectors

8.2 Rotary shafts

8.2.1 Non-contacting seals

A simple non-contacting seal can be constructed by passing the shaft through a tight clearance bore. The narrow passage acts as a long orifice and creates a pressure drop as liquid flows through. Some leakage must occur to create the pressure drop.

Ignoring the rotation of the shaft, at constant differential pressure the leakage rate is proportional to the cube of the clearance and inversely proportional to the viscosity and the length. Eccentricity of the shaft tends to increase the leakage. If the flow in the seal is laminar, eccentricity can more than double the leakage rate. Figure 8.1 shows how a non-contacting seal could be applied to a vertical pump. If the leakage can be returned to the pump suction, this type of sealing can be cost effective and durable.

The plain bore as shown is used as a back-up seal on some mechanical seal designs. In the event of mechanical seal failure, the throttle bush restricts the leakage rate by creating a high pressure drop.

The effectiveness of non-contacting seals can be greatly improved by using multiple seals connected by "sudden enlargements". This type of non-contacting seal is called a "labyrinth seal" and is used extensively in compressors and turbines. Having steps in the shaft, as well as the casing, further improves performance. When the shaft diameter is increased considerably, a flinger is created which prevents the axial motion of liquid by centrifugal force. Flingers are used in bearing housings to prevent oil leakage.

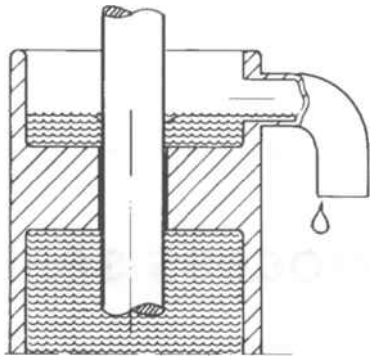

Figure 8.1 Shaft seal with radial clearance

8.2.2 Lip seals

Figure 8.2 shows an elastomeric lip seal which can be used at 0.2 to 0.5 bar differential at surface speeds up to 14 m/s. The lip is held in contact with the shaft by a garter spring. Designs are available which incorporate two lips on one seal. Seals can be manufactured without springs, which rely instead on the elasticity of the elastomer. Lip seals can be mounted in series for increased pressure capabilities; typically gear pumps for lubricating oil.

Most applications are as a bearing seal and secondary seal for outer quenching of a mechanical seal. However, new designs are capable of sealing 10 bar differentials and surface speeds of 40 m/s are possible. Many compounds are available, including PTFE, which is not a true elastomer. Some designs can be fitted with back-up rings, for additional support, and the back-up ring can include a non-contact throttle bush.

8.2.3 Hover seals

An elastomeric hover seal, see Figure 8.3, can be used for moderate pressures and where dilution by the sealing liquid can be allowed in the process. It tolerates relatively large radial movements and can be used for solid-liquid mixtures.

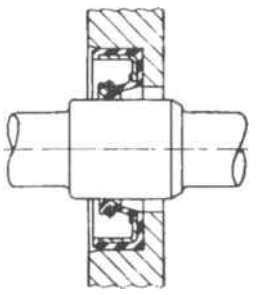

Figure 8.2 Elastomeric lip seal

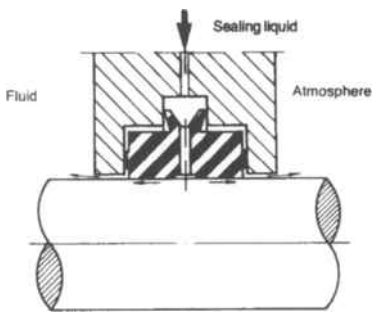

Figure 8.3 Elastomeric hover seal

LIBERTY EXHIBIT 1034, Page 258
This book belongs to Robert Durham (rdurham@thewaylabs.com)
Copyright Elsevier 2024

8.2.4 Auxiliary pumps

An auxiliary pump can be constructed by fitting vanes on the back of centrifugal pump impellers, see Figure 8.4; only the impeller next to the seal or stuffing box need be modified. These vanes are sometimes called 'pump out vanes'. The pumping action of the vanes reduces the pressure at the shaft and discourages flow down the back of the impeller. Some form of back-up seal, on the shaft itself, is necessary for when the pump is stationary. An auxiliary pump is useful when handling liquids difficult to seal and for solid-liquid mixtures.

8.2.5 Soft packing

A stuffing box with a soft packing material is the traditional seal for pumps, the preload being applied by means of an axial compressive force, Figure 8.5. Stuffing box designs for rotating shafts and reciprocating rods/plungers are very similar but material selections can be significantly different. Another variant, Figure 8.6, applies pressure radially and produces a better loading pattern.

8.2.6 Mechanical seals

Up till about 30 years ago, most rotodynamic pumps were fitted with soft packed stuffing boxes. Mechanical seals were available, but not mass-produced and consequently costly. Manufacturing techniques and materials improved and simultaneously pump users were convinced of the operational advantages of reduced routine maintenance. Currently, probably 95% of all rotodynamic pumps built for process applications are fitted with mechanical seals.

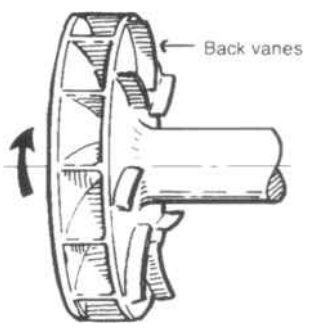

Figure 8.4 Auxiliary pump on centrifugal impeller

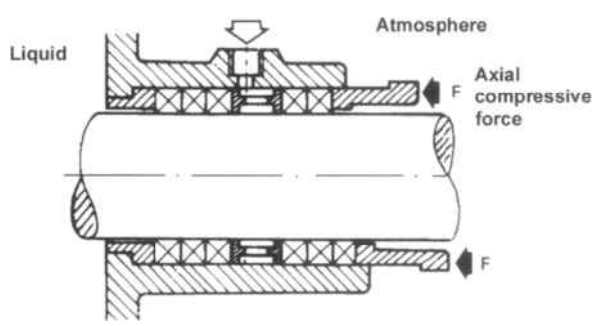

Figure 8.5 Traditional soft packed stuffing box

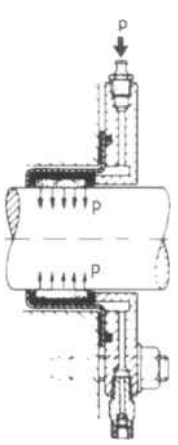

Figure 8.6 Modern soft packed stuffing box with hydraulic radial loading

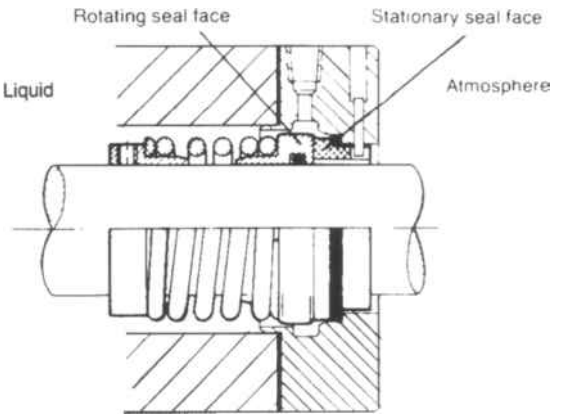

Figure 8.7 Mechanical seal with single driving spring

In a mechanical seal, sealing takes place between a stationary and a rotating axial face, see Figure 8.7. The basic concept is simple but extreme accuracy is required for the seal to function. The important components are simple and relatively small and can be used in multiple sets to build complicated seal units for hazardous liquids.

8.3 Process liquid seals for rotary shafts

A common feature of different sealing methods is the condition in the seal area or stuffing box, see Figure 8.8, which plays a critical part in the design of the seal. The operating conditions are described by:

- The process liquid with possible solid contaminants and gas content
- Temperature, which can deviate from that of the process liquid by use of various cooling/heating or flushing arrangements
- The shaft peripheral speed
- Liquid pressure at the shaft seal

The pressure at the shaft seal p_s, for a single stage pump, can be calculated in the following manner:

$$p_s = p_i + p_d \qquad \text{Equ. 8.1}$$

where:

p_i = inlet pressure to the pump

p_d = pressure differential within the pump between inlet and seal area, which varies according to the type of pump.

In the case of single stage, single entry centrifugal pumps having normal axial thrust balancing by means of a back clearance with relief holes or back vanes, p_d is approximately 30% of the pump's pressure rise.

For multi-stage pumps, the pressure at the seals is dependent upon the pump construction, i.e. the arrangement of the impellers and the type of axial thrust balancing employed. It is preferable not to have a high pressure seal and a low pressure seal. Identical seals reduce the spares inventory and reduce possible errors due to fitting similar parts in the wrong seal.

The pressure in the seal area p_s and the peripheral speed v are usually combined into a pv value, in the same manner as in plane bearing calculations. At the same time, the pv value pro-

LIBERTY EXHIBIT 1034, Page 259
This book belongs to Robert Durham (rdurham@thewaylabs.com)
Copyright Elsevier 2024

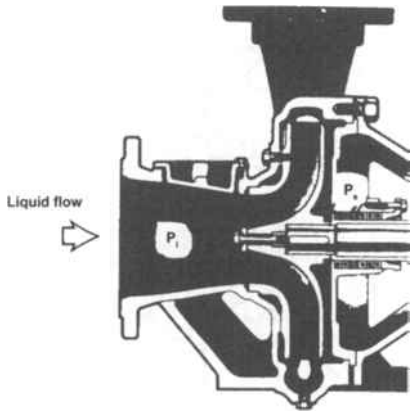

Figure 8.8 Pressure conditions in a centrifugal pump

vides a measurement for the frictional heat developed in the seal. In addition to the frictional heat generation, the temperatures at the surfaces of the seal itself are also dependent on the liquid temperature and the heat dissipation.

8.3.1 Soft packing

8.3.1.1 Operating principles

A soft packing set usually consists of two to six rings which are compressed by the axial tightening of a gland against the outside ring, see Figure 8.9.

A radial reaction pressure is exerted on the shaft and the bore of the stuffing box as a result of this compressive force. Due to the friction from, above all, the stuffing box, the radial reaction pressure is greatest at the gland and decreases towards the bottom ring.

Figure 8.9 shows a typical simple soft-packed stuffing box with a metal throat bush in the bottom of the stuffing box. In good stuffing box designs, a metal follower ring is fitted between the packing and the gland to promote even pressure distribution, circumferentially, around the shaft. The gland plate is usually attached by four studs. Adjusting packing evenly, via the four nuts, is a skilled task and it is very easy to produce an unbalanced axial load. It is also very easy to over tighten packing to reduce leakage to impractical levels.

The liquid under pressure will penetrate between the packing rings and the shaft to form small fluid reservoirs. There are therefore two different pressures to be considered, i.e. the liquid pressure in the reservoirs themselves, and the radial abutment pressure between the recesses. In the case of a soft packing charged with liquid pressure, the radial pressure varies as shown in Figure 8.10. The liquid pressure reduces gradually through the soft packings to atmospheric pressure at the gland.

A direct consequence of the distribution of the radial pressure along the length of the soft packing is that wear on the shaft is greatest at the gland, at A in Figure 8.10. If wear occurs at B then it is due to the action of abrasive particles in the liquid or shaft eccentricity.

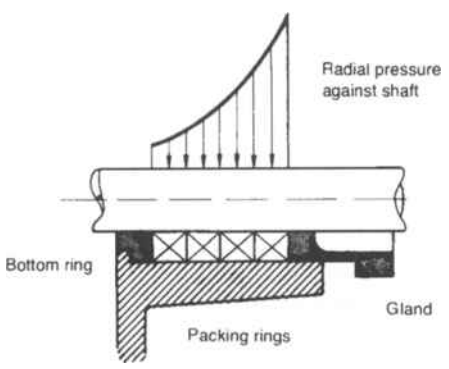

Figure 8.9 Soft packing with radial pressure distribution due to axial load

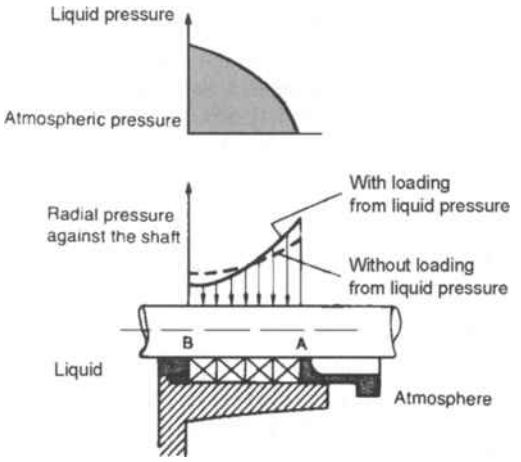

Figure 8.10 Pressure distribution in working soft packing

The extent of leakage depends on the radial pressure which in its turn is regulated by means of the axial compressive force. Leakage must always be present in order to remove frictional heat and to make up the liquid lost due to evaporation. The leakage rate in the case of working soft packing which is properly adjusted is 10 to 60 drops per minute.

Soft packing sets with a lantern ring have a somewhat different pressure distribution, see Figure 8.11. The barrier/buffer liquid or lubricant should be admitted in the middle of the box. In the case of a five ring set the lantern ring should be placed with two rings inboard and three outboard in order to avoid excessive axial movement of the lantern ring during adjustment, thereby blocking the supply of liquid.

8.3.1.2 Design variations

Before looking at different stuffing box arrangements in detail, it is worthwhile clarifying some of the terminology which is used when stuffing box design becomes complex. It is essential that all parties concerned describe the same function or component by the same terms.

- **Barrier liquid** — a liquid, at a higher pressure than the process liquid, which is introduced behind the primary seal to prevent outward leakage of the process liquid. A barrier liquid can also cool and lubricate the seal and prevent the ingress of air when the process liquid pressure is sub-atmospheric. As no process liquid can leak into the seal, a barrier liquid effectively protects against solids ingress. The barrier liquid is constrained by some form of secondary shaft seal. The barrier liquid normally circulates

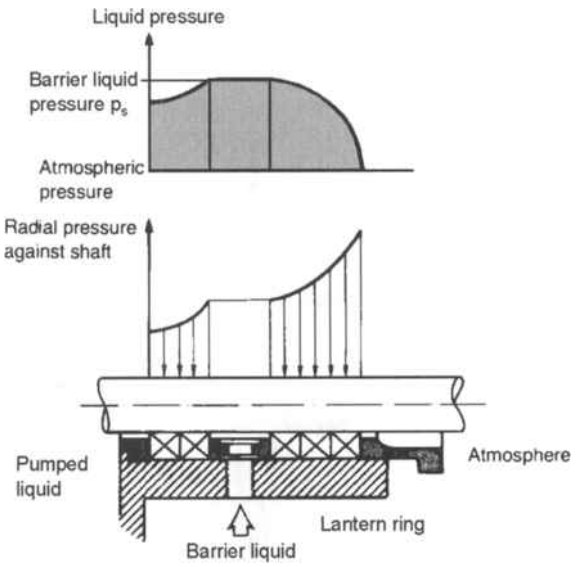

Figure 8.11 Pressure drop and radial pressure for soft packing with lantern ring

LIBERTY EXHIBIT 1034, Page 260
This book belongs to Robert Durham (rdurham@thewaylabs.com)
Copyright Elsevier 2024

through an external piping system driven by a pumping ring on the pump shaft.

Pumping rings are only used with mechanical seals. Variable speed pumps may require an external motor driven pump for circulation to ensure adequate flow at low pump speeds. Soft packed stuffing boxes will require an external pump unless thermo-syphon circulation can be used.

- **Buffer liquid** — a liquid, at a lower pressure than the process liquid, which is introduced behind the primary seal to lubricate and/or cool the seal, and/or dilute any leakage from the primary seal. The buffer liquid is constrained by some form of secondary shaft seal. The buffer liquid normally circulates through an external piping system driven by a pumping ring on the pump shaft.
- **Flush liquid** — a flow of clean liquid, which is introduced in front of the primary seal, to cool and/or lubricate the seal or to prevent the ingress of solids which may be contained in the process liquid. The flow rate of the flush liquid is dependent upon the differential pressure available.
- **Lubrication** — a small flow of suitable lubricating liquid introduced behind the primary seal. The lubricant may mix with the process liquid and contaminate it. Some lubricant will leak past the secondary seal together with process liquid. All the lubricant is "lost".
- **Quench liquid** — a flow of cool liquid or steam, which is introduced on the atmospheric side of the last seal, to condense any escaping vapour or prevent the formation of crystals or solids which would interfere with the seal function. Alternatively, a flow of warm liquid or steam to prevent ice formation when the process liquid temperature is below 0 °C. A flow of cold water can be used to provide an atmospheric seal to prevent air ingress when the process liquid pressure is sub-atmospheric.

Plain stuffing box

The process liquid forms a fluid film and must therefore be clean in order to avoid unacceptable wear. This design, see Figure 8.12, can cope only with moderate temperatures where the dissipation of heat takes place by means of the leakage and conduction through the shaft and stuffing box. There is a risk of air being sucked in at low inlet pressures. Because process liquid leaks out of the packing, this type of packing arrangement is not suitable for any liquid which damages the environment. It may be suitable for some hazardous liquids depending upon the nature of the immediate surroundings.

The stuffing box arrangement as shown can be improved by the addition of a throat bush and a follower ring, see Figure 8.14. If a liquid quench was fitted, the problem of air entrainment at low pressure would be eliminated

Stuffing box with lantern ring

The arrangement in Figure 8.13 is also suitable for clean liquids. The lantern ring can perform several functions, such as barrier or buffer liquid or lubrication. The barrier or buffer liquid could be the process liquid taken from a tapping on the pump. Both of these options would solve air entrainment at low operating pressures. If the process liquid was not oil, a separate oil supply would be required for lubrication.

If the barrier liquid was "safe" this stuffing box arrangement could be used for hazardous liquids. The liquid supplied must be selected taking into account the process liquid and should maintain a pressure which exceeds the pressure at the seal by 1 to 1.5 bar. The quantity of barrier liquid which leaks into the process liquid is very small, a fraction of a litre/minute.

Flushed stuffing box

In the case of abrasive solid-liquid mixtures, the throat bush can be modified to allow the introduction of a clean flush liquid, see

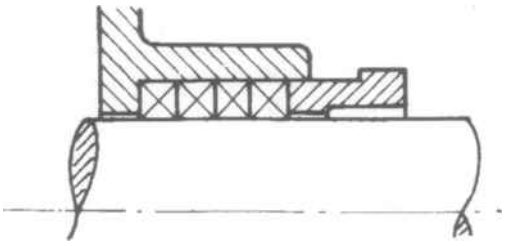

Figure 8.12 Plain stuffing box

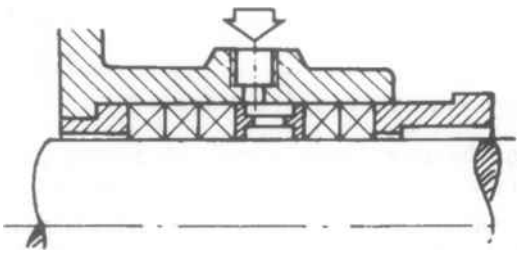

Figure 8.13 Stuffing box with lantern ring

Figure 8.14, in order to prevent abrasive particles from entering into the box. In this case the quantity of flush liquid which leaks into the process liquid can be considerable. The minimum flush required can be approximated by considering a velocity of 0.1 m/s through the throat bush clearance when worn.

Stuffing boxes can be fitted with lantern rings as well as flushed throat bushes. Contaminated hazardous liquids can be pumped or contaminated liquids requiring lubrication.

Stuffing box with cooling

With liquid temperatures in excess of 80 to 120 °C, depending upon the packing material, cooling of the stuffing box should be considered. Cooling of the stuffing box and shaft can be accomplished by the barrier or buffer liquid pumped through the lantern ring. However this method does not cool the bottom of the box or the front rings of packing. External cooling of the packing rings is relatively ineffective because of the poor thermal conductivity of the packing material.

The cooling chamber should therefore extend in front of the packing rings in the case of highest temperatures, see Figure 8.15. Cooling of the gland should also be provided if there is a possibility of vapour forming in the packing. Any vapour created in the packing will shorten packing life dramatically. Gland cooling prevents heat being conducted through the shaft to the front

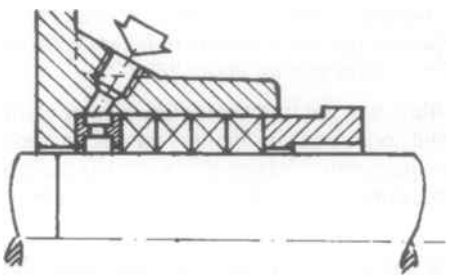

Figure 8.14 Stuffing box with flushed throat bush

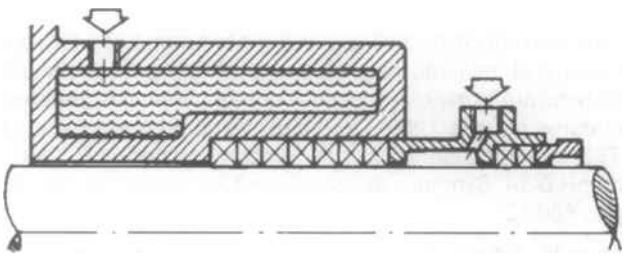

Figure 8.15 Cooled stuffing box with cooled gland

LIBERTY EXHIBIT 1034, Page 261
This book belongs to Robert Durham (rdurham@thewaylabs.com)
Copyright Elsevier 2024

Packing	Fibre	Filler/coating	pH	Press bar	Speed m/s	Max °C	Min °C	Applications
Solid plaited	Flax	graphite	5 - 9	20	8	120		water, seawater
Cross plaited	Ramiex	PTFE	4 - 11		15	120	-30	water, brine, water-oil emulsions
Cross plaited	PTFE	PTFE/PTFE	0 - 14	10	4	250	-100	weak and strong acids, weak and strong alkalis, solvents
Cross plaited	PTFE	PTFE/PTFE/lubricant	0 - 14	25	10	250	-100	weak and strong acids, weak and strong alkalis, solvents
Cross plaited	Aramid	PTFE/lubricants	2 - 13		20	250		water, oils, solvents, medium strength acids, food
Cross plaited	Aramid/-Graphite	PTFE/lubricants	2 - 13	20	20	260		Water, chemicals, mild acids, alkalis, sewage, abrasive slurries
Cross plaited	Aramid	PTFE/graphite/lubricants	1 - 14	20	25	290		weak acids, weak alkalis, oils, abrasive slurries
Cross plaited	BCX	PTFE/lubricants	3 - 13	100	10	300		acids, alkalis, oils, solvents, water
Compressed foil	Graphite		0 - 14	20	30	500+	-200	acids, alkalis, solvents, hot oil and water

Table 8.1 Packing materials and operating parameters

bearing. The gland shown is fitted with auxiliary packing, a smaller packing cross-section than the main packing.

All the stuffing box arrangements shown, indicate the packing rubbing directly on the pump shaft. Wear of the shaft can be avoided by using a sleeve. The sleeve can be made of a different material to the shaft, a material with better wear and corrosion resistance properties. A pump with a carbon steel shaft could be fitted with a sleeve of hardened 12Cr steel or solid Stellite®, for example. When wear occurs, the sleeve is replaced, not the complete shaft.

8.3.1.3 Packing material

The most common packing material is plaited or braided fibre, but packing compounds and moulded rings are also used. Table 8.1 provides a survey of packing materials.

A braided packing consists of:

- A fibre, the basic material
- An optional coating on each fibre
- An optional impregnation or filler applied during braiding

More than one type of fibre may be used. Modern designs sometimes incorporate a strong central core and/or reinforced corners. Fibres currently in use include:

Vegetable fibres: hemp, flax, linen, cotton; used for temperatures up to 100 °C. Poor chemical resistance.

White asbestos and **blue asbestos** have a wide operating range and can be used for temperatures up to 500 °C. The use of asbestos is now forbidden by legislation in certain countries and asbestos has largely been replaced by other materials.

Synthetic fibres: Aramid®, Kevlar®, PTFE; have excellent sliding properties and are resistant to a very wide range of liquids. Maximum temperature about 260 °C.

Graphite fibre and foil has a very low friction coefficient and good thermal conductivity properties as well as good chemical resistance, apart from oxidising acids such as nitric acid. Maximum temperature from 500 to 3000 °C depending upon the liquid.

Glass fibre has largely replaced blue asbestos. Glass fibre is not resistant to hydrofluoric acid and strong alkalis. Maximum temperature about 480 °C but will reduce to 260 °C if PTFE lubricants are used.

In order to reduce friction the packing is impregnated with a suitable animal, mineral, vegetable or synthetic-based lubricant. The natural and mineral lubricant impregnation withstands temperatures of up to 125 °C and a pH value between 5 and 10. PTFE impregnation withstands temperatures of up to 260 °C and pH 0-14. Synthetic silicone-based lubricants can be used up to 480 °C.

The style of stuffing box required and the packing material necessary are both functions of all the operating conditions. The pump selection can be greatly influenced by operating conditions. No part of the pump application or design should be considered in isolation.

8.3.1.4 External systems

As stuffing boxes can have liquid or steam introduced from external sources, these obviously involve external systems. VDMA 24297 and API 610/EN ISO 21049 have standard arrangements designated for most applications.

The most popular stuffing box system for soft-packed boxes is actually an internal system with no external components. An internal drilling leads clean liquid from the pump discharge branch to the throat bush, a clean flush. This is classified as "A" in VDMA and Plan 01 in API.

If the process liquid was contaminated, or was a solid-liquid mixture, then feeding raw medium to the throat bush would be counterproductive. In these instances, a completely internal system is not viable. An externally piped system, including a cyclone separator to remove the solids, would be fitted; VDMA "B" or API Plan 31. In its simplest form an external system can consist of a piece of pipe and an orifice, Plan 11. This would be used when an internal drilling was impossible. VDMA 24297 does not differentiate between internal and external systems, only functions.

Most modern stuffing box systems are designed for mechanical seals. See Section 8.3.2.7 for a description of popular schemes. Pumping rings are usually not possible in soft-packed boxes, external pumps must be fitted if required.

8.3.1.5 Maintenance

Mechanical seals have replaced soft packing, in many applications, because of reduced routine maintenance. Once fitted, mechanical seals cannot be adjusted. See Section 8.3.2.7 about comments on strainers. Soft packing, on the other hand, must be inspected regularly and adjusted if required. Adjusting packing is a skilled job. Different applications and different packing types require different techniques.

Correct installation and bedding-in, after selecting the correct seal arrangement and materials, is a prerequisite of good packing life. It is difficult to assess the useful operating life of packing. In some hot applications, a good packing life will be three months. In some water pump applications, using large slow pumps, good packing life can be three years. In order to obtain the longest life possible the following procedure should be adopted:

- Read the pump manufacturer's instructions first.
  Some packing rings must be soaked in oil prior to installation. Failure to comply will inevitably shorten packing life.
- The stuffing box must be completely empty and perfectly clean before repacking.
- Inspect the old packing rings as removed, check for indications of overheating, extrusion and chemical attack. Note

LIBERTY EXHIBIT 1034, Page 262
This book belongs to Robert Durham (rdurham@thewaylabs.com)
Copyright Elsevier 2024

the order of component removal from the box and check that the box was assembled correctly the last time.

- Check the throat bush and gland bores for wear. Replace if the clearance is greater than the manufacturer's recommendations.
- Check the surface finish of the shaft and the stuffing box bore. The shaft should be better than 0.4 μm R_a, 16 micro inches CLA, but not too good. Not better than 0.2 μm R_a, 8 micro inches CLA. The stuffing box bore should be better than 1.6 μm R_a, 64 micro inches CLA. Both surfaces should be free of scratches
- When replacing the throat bush, whenever possible lubricate the bore. Special lubricants may be required for hot applications, and definitely for food applications.
- Whenever possible, lubricate the shaft and stuffing box bore prior to fitting the rings.
- Fit each ring individually, tap into place with a piece of split pipe of approximately the same proportions as the rings. Lubricate lantern rings when fitted. Stagger ring joints.
- Grease or lubricate the gland threads before the gland is tapped into place. Tighten gland nuts only hand tight.
- Vent and prime pump if necessary, start pump and run for about 15 minutes before tightening gland. Tighten evenly by 1/6th turn about every 10 to 30 minutes until leakage is reduced. If a tapping to the lantern ring is available, oil while running.

Hard packing will bed-in much slower than soft packing. Hot applications will probably need the packing adjusted as the pump warms up. Hot pumps will probably need the gland loosened as the pump cools down for shut-down. In some cases the packing bedding-in will take up to a week.

8.3.1.6 Trouble-shooting

If operating problems occur, there is one very important action which must be done immediately — check the operating conditions. If the pump is not running at the correct speed, suction head, discharge head and temperature, data sheet conditions, then it may not be surprising that the seal gives problems. Check the process liquid. Is it the same, exactly the same, as the data sheet liquid? If all the operating conditions do not agree with the data sheet values then it is an upgrade problem not a trouble-shooting problem. If operating conditions are correct, Table 8.2 can be used for guidance.

NOTE: Only use spare parts supplied by the original equipment manufacturer. It is not possible to completely 'reverse engineer' a component from the finished part. It is easy to check the chemical composition and physical properties. It is impossible to detect if the material was vacuum remelted, or of X-ray or ultrasonic quality, or has the full heat treatment history. Dimensional inspection will not reveal whether the part is on top or bottom tolerance. Fitting parts, made by others, will invalidate any manufacturer's warranty.

The correct functioning of any external system must be checked regularly and liquid supplies for barrier, buffer and lubrication must be maintained.

Problem	Probable cause	Remedy
Packing begins to leak after a short period of operation.	Debris in process liquid or operating condition transients during start-up.	When process conditions have stabilised, disassemble and repack box.
Packing begins to leak after a short period of operation	Packing materials not suitable for operating conditions.	Check operating conditions against specification. Consult pump and packing manufacturer.
Packing begins to leak after a short period of operation	Packing materials not suitable for cleaning or stationary conditions.	Consult pump and packing manufacturer.
Packing extrudes into throat bush and/or gland .	Large clearance.	Check clearance, if too big replace throat bush and/or gland. Check life of component, is it short or adequate.
Packing extrudes into throat bush and/or gland .	Packing too soft.	Fit hard end rings to packing set. Glass reinforced PTFE is common. Metal rings with tight clearance can be used but must be a very good bearing material; phosphor bronze or cast iron.
Leakage from outside of gland.	Packing not fitted correctly.	Strip stuffing box and repack in accordance with manufacturer's instructions.
Leakage from outside of gland.	Packing wrong cross-section.	Fit correct packing size.
Leakage from outside of gland.	Stuffing box or gland worn.	Strip stuffing box and check dimensions and surface finish. Contact manufacturer for replacement parts if badly worn.
Packing scored on outside surface.	Packing wrong cross-section, rotating with shaft.	Fit correct packing size.
	Stuffing box worn.	Check stuffing box dimensions. If badly worn, oversize packing may be possible. Fit 1/4" instead of 6 mm.
Packing rings extrude or flow into adjacent rings.	Packing rings cut too short.	Fit die formed rings prepared by packing manufacturer.
	Packing too soft, or overheating slightly.	Fit hard spacers between rings.
	Slight attack by liquid.	Upgrade packing material.
Packing burnt or charred in the bore.	Dry running.	Prevent pump operating without process liquid.
	Lubrication failure.	Change packing type to grade with more or different lubrication impregnated. Fit lantern ring and lubricate or supply buffer liquid.
Packing seriously attacked, reduced in volume.	Packing incompatible with process liquid, or barrier, buffer, lubricant, when used.	Check process liquid quality and barrier, buffer, lubricants. Change packing grade.
Excessive leakage.	Packing attacked by liquid(s).	Check liquid(s). Change packing grade.
	Leakage through ring joints, rings too short.	Fit die formed rings prepared by packing manufacturer.
	Stuffing box incorrectly packed or reassembled.	Strip stuffing box and repack in accordance with manufacturer's instructions.
	Shaft eccentricity.	Check shaft run-out. Check pump bearings.

Table 8.2 Trouble-shooting guide for soft packing

8.3.2 Mechanical seals

8.3.2.1 Operating principles

The sealing of a rotating shaft passing through a pump casing is achieved by means of a rotating, optically flat seat, rubbing against a stationary, optically flat, seat with a fluid film in between them, see Figure 8.16. Sealing between the rotating seat and shaft or sleeve, and the stationary seat and gland, is usually performed by means of an elastomer such as an "O" ring, "V" ring, etc. The primary purpose of the spring is to provide an initial pressure between the sealing seats. One of the great advantages of this type of sealing is that it does not cause wear to the shaft or the sleeve.

The theory as to what happens between the seat faces is explained schematically in Figure 8.17. The seal should be considered as drip-free but not leak-free. The very low leakage rate, known as diffusion, will escape in the form of vapour on the atmospheric side of the seal.

LIBERTY EXHIBIT 1034, Page 263
This book belongs to Robert Durham (rdurham@thewaylabs.com)
Copyright Elsevier 2024

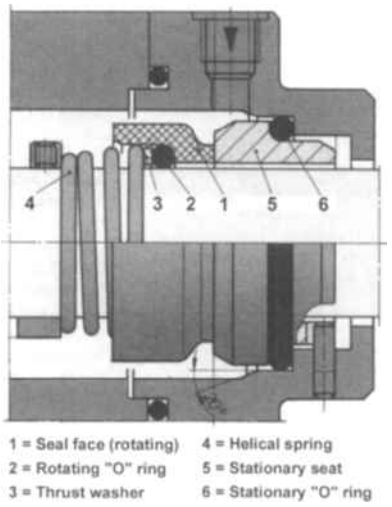

Figure 8.16 A simple unbalanced seal arrangement for a pump
Courtesy of Burgmann Industries GmbH & Co KG

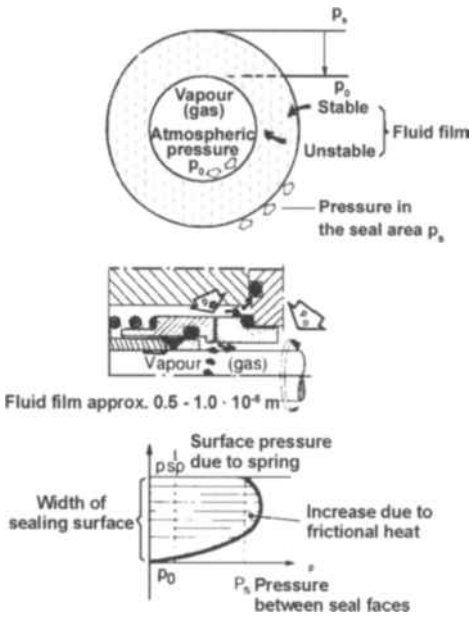

Figure 8.17 Fluid distribution across seat faces and operating pressures

Leakage through the seal faces in the case of mechanical seals amounts to 0.05 to 400 cm^3/hour depending on operating conditions, dimensions and choice of seal face materials. Manufacturers have formulae or graphs to evaluate leakage. No dripping, however, should be observed, only the formation of vapour which can lead to a certain amount of crystal formation.

A general and very important rule is that a mechanical seal should never be run dry, there must always be a fluid film between the faces. Dry running can occur even when the pump is full of liquid if the temperature is so high that the liquid vaporises in the stuffing box. Only specially designed seals can be run on the vapour phase of a liquid. Dry running seals are available for specific applications. The seal operating conditions must be fully described and include details of the vapour properties and the length of time the seal will operate without liquid lubrication or cooling.

At high pressures and high speeds the sliding surfaces must be relieved so that the fluid film is kept stable. The frictional heat must be limited at temperatures approaching the vapour temperature. In such cases, the face pressure is reduced hydraulically. This is done by balancing the ratio between the sealing diameter "S" and the inner diameter of the stationary seat. The pressure between the seal faces is thus varied according to the liquid pressure. Dependent upon the relationship between the

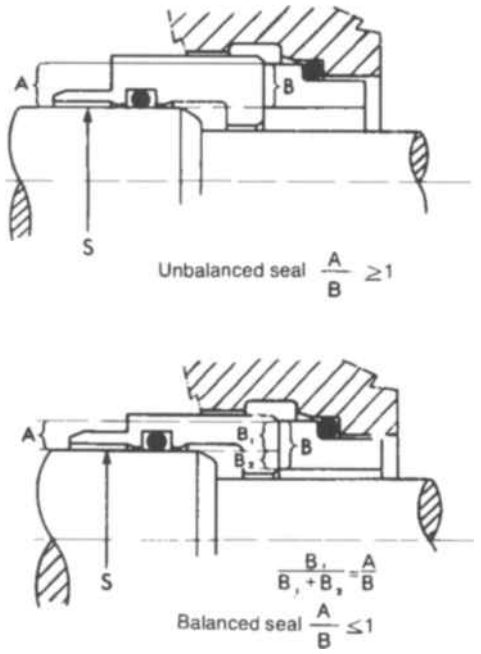

Figure 8.18 Hydraulic balancing of mechanical seals

two surfaces "A" and "B" in Figure 8.18, the seal is termed, balanced or unbalanced.

The limit between balanced and unbalanced seals is determined by the pv factor and the operating temperature. Balanced standard seals can be used for pressures up to about 16 bar at speeds of 20 m/s. In the case of higher pv values, hydrodynamic seals having a controlled leakage must be used. See also Section 8.7, Useful references.

8.3.2.2 Surface flatness

The flatness of the seat faces must be of a very high accuracy. The leakage is approximately proportional to the third power of the thickness of the fluid film which normally is in the order of 0.001 mm. Flatness is normally expressed in light bands, since checking normally takes place using an optical flat and monochromatic light, usually sodium light. A deviation of one light band corresponds to an out of flatness of 0.25 μm.

Normal standards of flatness are better than 1 to 2 light bands with variations up to approximately 5 light bands in the case of shaft diameters over 100 mm or in the case of special face materials. In addition to the number of light bands the light pattern must also be considered, see Figure 8.19. Large differences in seal tightness occur, for example, between a spherical surface, light pattern 3, and a wavy surface, light pattern 5. A check of seat faces is recommended as a standard measure prior to the installation of a mechanical seal.

Because of the accuracy of mechanical seal components, any work done on seals must be carried out in clean conditions. All components must be thoroughly cleaned prior to assembly.

8.3.2.3 Design principles

The generation of the initial sealing pressure, i.e. the initial face load is provided by using different types of springs. Single springs, multiple springs, Bellville washers and wave springs are the most common, see Figure 8.20. The drive, i.e. transmission of the torque to the rotating seat, can when single springs are being used, be carried out by the spring itself, separate driving elements used with other spring types. At least two driving points are necessary in order to guarantee a satisfactory loading of the seal faces.

The top illustration in Figure 8.20 shows a seal utilising two Bellville washers to provide the axial load. The rotating seat is positively driven by the shroud extending from the drive collar. The next picture shows the same type of seal but the axial load

LIBERTY EXHIBIT 1034, Page 264
This book belongs to Robert Durham (rdurham@thewaylabs.com)
Copyright Elsevier 2024

Light pattern 1
The surface is flat within 1 light band - 0.25 μm. The distance between the bands does not tell us anything about flatness only about the size of the air gap.

Light pattern 2
The surface is almost flat but the edges have been rounded, probably in connection with hand polishing.

Light pattern 3
The surface is concave or convex to 3 light bands. This can be decided by pressing on the centre of the glass. If the rings then move outwards the surface is convex.

Light pattern 4
The surface is not completely flat. The tangent is drawn to the wavy bands. Half the number of light bands which are bisected by the tangent is a measurement of the flatness.

Light pattern 5
The surface goes in waves. It is difficult to achieve tightness. The cause can be residual tension after tightening in a chuck. The flatness fault is evaluated by comparison with light pattern 1.

Light pattern 6
The surface goes in waves. The same phenomena as light pattern 5 but 4 high points.

is provided by multiple helical compression springs which are located in pockets in the drive collar. For this particular seal the manufacturer recommends multiple springs should be only considered for seals larger than 100mm.

The next illustration shows a rubber bellows style seal. The axial load is provided by a single helical compression spring which also provides the driving torque. In the event of spring problems some, or all, of the torque may be transmitted by the bellows and considerably shorten the life. The bottom illustration shows a metal bellows seal. Both the axial load and the driving torque are provided by the bellows.

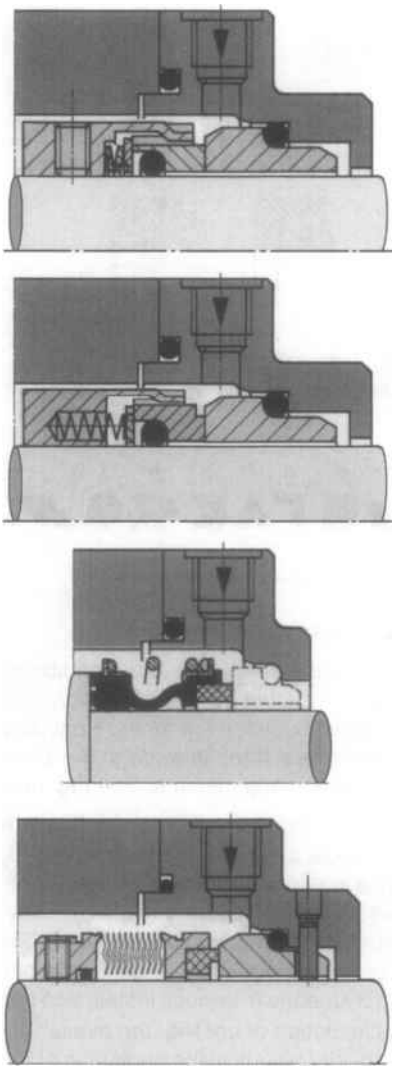

Figure 8.20 Examples of face loading and drive
Courtesy of Burgmann Industries GmbH & Co KG

Single springs should generally be chosen in preference to multiple spring types. The reasons for this are that driving and face loading can be combined in one element, that the single spring is robust and withstands corrosion, as well as the fact that the risk for blocking is less than in the case of small springs. In addition, the single spring is easier to handle.

The single helical spring has one major disadvantage; the spring handing must be changed if the direction of rotation is changed. For example, a double suction between bearings on a pump, with two stuffing boxes, would have a different seal at each end, i.e. different springs. To overcome this problem, many standard mechanical seals are fitted with Bellville washers. The springs are usually inside the stuffing box in the process liquid. Special mechanical seals can have the springs outside the liquid on the atmospheric side.

The shape of the rotating seat varies with the method of driving, engagement and the loading, as well as the materials of which the seal faces are made. In order to take up any vibration in the shaft, parallel deviations in the "O" ring grooves as well as any effects of the driving arrangement, the stationary seat should be mounted as flexible as possible. Figure 8.21 shows various methods of attachment. "a" is DIN standard construction and provides the greatest flexibility.

As shown in Figure 8.22 static seals are produced in a great many varieties. "O" rings dominate. "O" rings, type "a" are standard fittings, type "m" for temperatures up to 250 °C, wedge shaped seal rings are often used for high temperatures, type "c".

LIBERTY EXHIBIT 1034, Page 265
This book belongs to Robert Durham (rdurham@thewaylabs.com)
Copyright Elsevier 2024

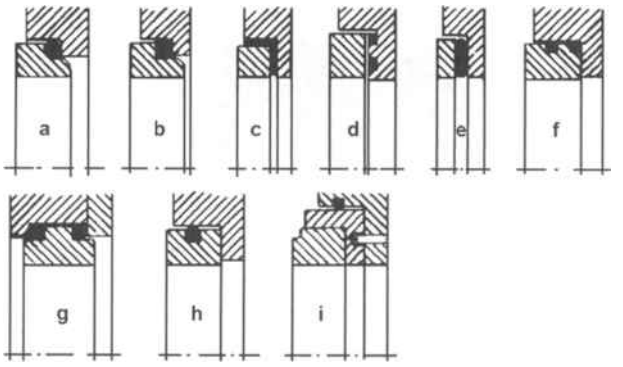

Figure 8.21 Examples of how a stationary seat can be fitted and sealed

Figure 8.22 Examples of sections of static seal rings

8.3.2.4 Temperature considerations

To achieve acceptable temperature conditions at the seal faces, frictional heat must be dissipated to avoid dry running due to loss of liquid between the faces. Heat dissipation takes place by means of heat transfer through the seats and by convection to the surrounding medium. See Figure 8.23.

Each seal and combination of materials has what is called a minimum ΔT in order to be able to function, see Figure 8.24. ΔT is the difference in temperature between the boiling point of the liquid at the seal cavity pressure and the actual temperature of the liquid. Usually ΔT should be at least 20 °C. The seal manufacturer can provide information for each type of duty and seal arrangement. By means of various installation options, internal and external circulation or cooling, the available ΔT can be increased, see the definitions at the beginning of Section 8.3.1.2. The required ΔT of a seal can also be reduced by using materials with good thermal conductivity or with low friction, etc. In such special cases the ΔT required can be reduced to approximately 5 °C. In Figure 8.24, the operation range of the seal is to the left of each respective speed boundary. The liquid is water. The distance between the vapour curve and the seal's limit is the required ΔT for each speed

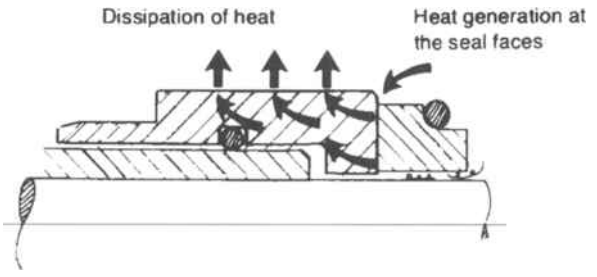

Figure 8.23 Heat dissipation in a mechanical seal

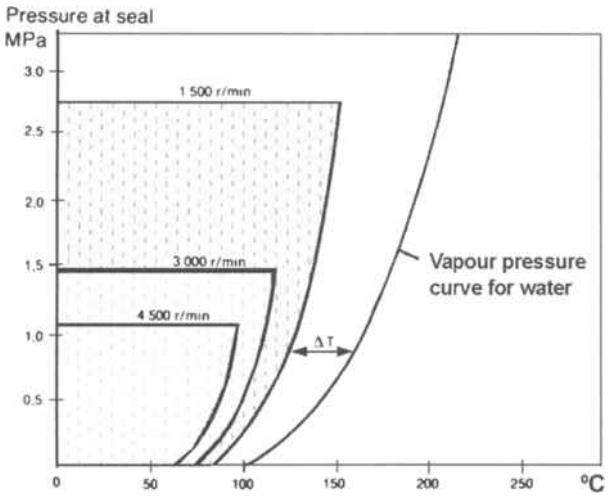

Figure 8.24 Pressure and temperature relationships at three different speeds for a balanced seal

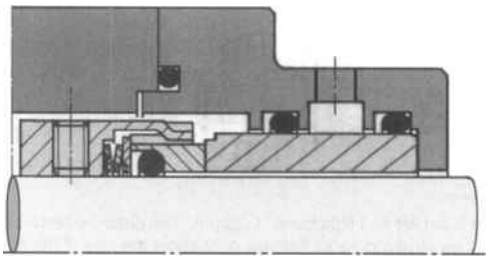

Figure 8.25 Seal without circulation but with external heating/cooling
Courtesy of Burgmann Industries GmbH & Co KG

8.3.2.5 Design variations

Single seal without circulation

A seal without circulation, see Figure 8.25, can be used in favourable cases such as clean liquid and moderate temperatures. Cooling or heating can take place in direct contact with the stationary seat, if ports are provided in the gland plate.

Single seal with circulation of pumped liquid

The purpose of the circulation is:

- To remove the frictional heat from the seats,
- To remove very fine particles and crystals from the area around the seal faces,
- To cool or to heat the seal cavity in relationship to the pump in general.

This is the most common seal arrangement and by varying the circulation system and the choice of material most liquids can be handled, both cold and hot, clean and slightly contaminated, see Figure 8.26.

Figure 8.35 also shows suitable external systems; Plan 11, Plan 12, Plan 21, Plan 22, Plan 31, Plan 52 and Plan 62. There are certain exceptions and they are described later.

Single seal with flushing

Plan 31 in Figure 8.35 is for heavily contaminated liquids and suspensions, but the cleaned process liquid is piped to a modified throat bush, not the seal cavity. The flow of liquid through the throat bush discourages solids from entering the seal cavity. An external clean liquid may be used when dilution in the process is permissible. See also Figure 8.14 which shows a flushing throat bush in a soft packed stuffing box.

Single seal for slurries without flushing

If dilution cannot be allowed due to process, technical or economic reasons, a balanced reversed seal can be used with hard-wearing surfaces, e.g. tungsten carbide versus tungsten

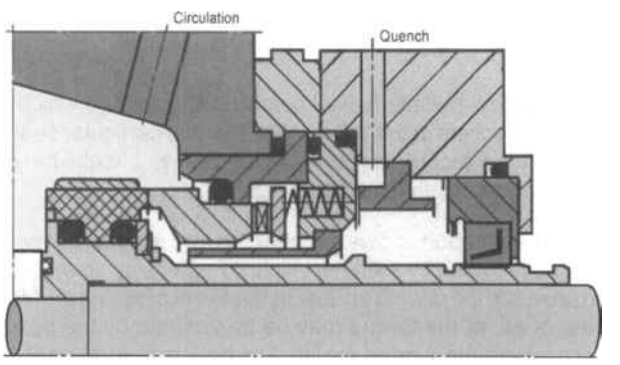

Figure 8.26 Seal with circulation or quenching
Courtesy of Burgmann Industries GmbH & Co KG

LIBERTY EXHIBIT 1034, Page 266
This book belongs to Robert Durham (rdurham@thewaylabs.com)
Copyright Elsevier 2024

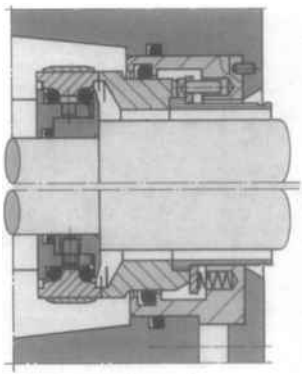

Figure 8.27 Balanced reversed seal for slurries
Courtesy of Burgmann Industries GmbH & Co KG

carbide, see Figure 8.27. The spring is located outside the slurry and all the parts in contact with the slurry are so designed that clogging is prevented. A Plan 31 system would still be beneficial. Quench for cooling and keeping the atmospheric side of the seal clean is also recommended.

Figure 8.27 shows two versions of the same seal design. The upper view shows a seal which is assembled from inside the pump when the impeller is removed. This style allows for a very simple seal cavity design without external bolting. The lower view shows the same seal for assembly from the low pressure side of the seal cavity; a gland plate is required. In both styles the rotating seat is mounted on a carrier which is clamped between the back of the impeller and a step in the shaft.

Single seal with quench

The quench, see Figure 8.26, can be used to:

- Remove dangerous liquids or gases which escape,
- Cool or heat the seal from the atmospheric side,
- Rinse away any wear powder and crystals,
- Lubrication for dry-running protection.

See also Section 8.3.1.2 and Plan 62 in Figure 8.35.

Double seals

Figure 8.28 shows a double seal, consisting of two seals usually mounting back-to-back and having a selected barrier or buffer liquid in between. The pressure of the liquid placed between the seals is dependent upon its precise function, see Section 8.3.1.2. A double seal involves extra equipment in order to pressurise, circulate and possibly cool or heat the liquid. Double seals are therefore only recommended where regarded as being necessary for protection of the pump, personnel or the environment.

Typical installations where double seals are required:

- suspensions and slurries in which the liquid is hazardous
- liquids which are toxic, radioactive or liable to explode
- liquids which have dissolved or entrained gases which are toxic or flammable

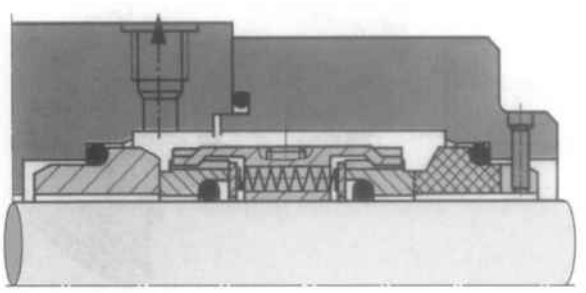

Figure 8.28 Back-to-back double seal
Courtesy of Burgmann Industries GmbH & Co KG

Figure 8.29 Typical back-to-back unbalanced double seal
Courtesy of Burgmann Industries GmbH & Co KG

Figure 8.30 Typical pumping ring
Courtesy of Burgmann Industries GmbH & Co KG

- when there is a risk of severe crystal formation
- when the liquid is very corrosive to pump external components and the surroundings

Figure 8.29 shows the double seal components. The driving slots, where the drive collar transmits the torque to the rotating seats, are easily seen. When it is necessary to circulate a barrier or buffer liquid through the seal cavity the outer diameter of the drive collar can be covered with screw helices to form a screw pump, see Figure 8.30. The screw pump formed is generally known as a "pumping ring" or a "pumping screw". The action of the pumping ring is dependent upon the direction of rotation. For double-ended pumps the seals may be identical except for the drive collar and pumping ring.

Double seals can be fitted facing the same way i.e. tandem seals. In extreme cases, three seals can be fitted. For all hazardous liquid applications, the advice and experience of the seal and pump manufacturer should be obtained.

Single seal of bellows type

Used for very corrosive liquids and hot or cold liquids. The parts in contact with the liquid are made of ceramic, elastomer or ceramic and CrNi steel, see Figure 8.31. Elastomer bellows can be made from natural rubber (NBR), EPDM, Viton® or PTFE. Pressures up to 12 or 16 barg can be accommodated while operating between -20 and 120, or sometimes 140 °C. Metallic bellows seals can operate over a much wider temperature range, typically, somewhere between -100 and 400 °C. Pressures are generally limited to 25barg.

For PTFE bellows, pressure can be up to 6 bar with a temperature range of between -20 °C and 120 °C. For metal bellows seals, pressures go up to 16 bar with a temperature range from -100 °C to 350 °C. Typical applications include asphalt, bitumen and proprietary heat transfer fluids.

Cartridge seals

All the mechanical seal designs reviewed so far require "setting" or "adjusting" during assembly. Seal assembly is performed on the pump which may be outdoors under unfavourable weather conditions or local pollution.

Also it is usual for the pump manufacturer to supply the gland plate. Communications between the pump and seal manufacturers must be good. However, seal assembly problems first

LIBERTY EXHIBIT 1034, Page 267
This book belongs to Robert Durham (rdurham@thewaylabs.com)
Copyright Elsevier 2024

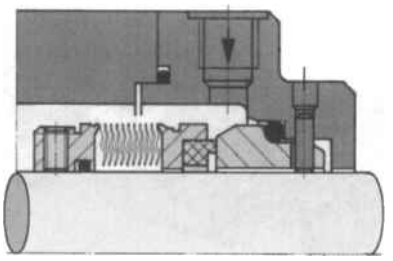

Figure 8.31 Chemical bellows seal
Courtesy of Burgmann Industries GmbH & Co KG

appear in the pump manufacturer's works where any problems can be quickly rectified. Many pump users, including most oil and gas users, thought the use of cartridge seals could significantly improve pump reliability. For an indication of general process equipment reliability look at Tables 13.2 to 13.6. Removing the necessity for seal adjustments was seen as a major improvement. When viewed in the correct perspective seal adjustment is a very small part of a much bigger operation which may include dismantling most of the pump. The reliability of a pump operating at site is controlled by the actions of:

- The purchaser
- The system designer
- The piping designer
- The pump manufacturer
- The seal manufacturer
- The installation team
- Process operators and control room staff
- Maintenance staff

The use of cartridge seals started to become widespread when ISO 21049/API 682 specified them as a minimum requirement. A seal, supplied as a fully assembled subsystem, can be tested before fitting to the pump and after repair. Seal inspection and repair can be performed in the workshop under controlled cleanliness conditions. The cartridge design is very good for complex seal arrangements. Site staff do not have to work outdoors with a number of components and little springs, trying to assemble a seal in the bottom of a hole. (Rather like trying to assemble a watch when you have both hands and feet inside the case!) ISO 21049/API 682 only permits the use of cartridge seals which can be fitted as complete assemblies. Figure 8.32 shows a balanced double cartridge seal suitable for oil and gas applications up to 150 barg and 150 °C.

The seal arrangement shown is very different from all of the seal styles shown previously. Most of the seal is not in the "pump" but within a seal cavity which is bolted on to the pump stuffing box. After the seal assembly is located correctly and bolted securely to the stuffing box the seal sleeve can be attached to the pump shaft. The seal settings are maintained by "transport lugs" (the grey strips bolted to the gland plate which engage in the slot in the sleeve). The seal shown uses a clamping ring to compress the sleeve on to the shaft. When the sleeve is attached the transport lugs can be disengaged and the seal installation is complete. The double seal shown has a throttle bush to reduce leakage from the drain connection.

Split seals

One of the problems with seal and soft packed stuffing box maintenance is dismantling the pump until a bare shaft end is exposed. It may be necessary to remove a bearing housing and the coupling. Seals which can be mounted "across" a shaft rather than "along" it could save much time. Soft packing can be split so that the wearing part, the packing rings, can be replaced without major dismantling. Mechanical seals can be "semi-split"; that is the normal wearing components can be split

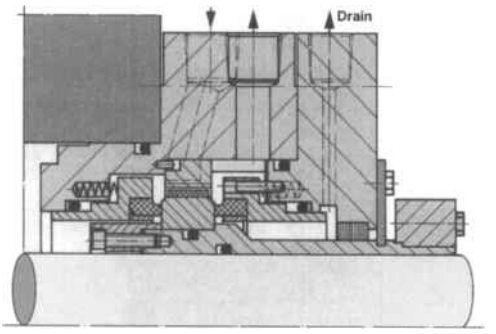

Figure 8.32 A balanced double cartridge seal with pumping ring
Courtesy of Burgmann Industries GmbH & Co KG

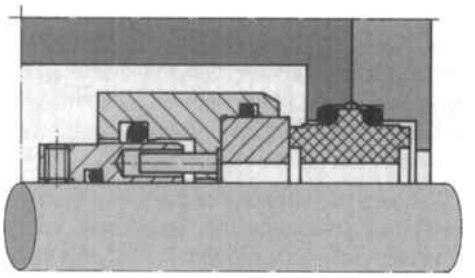

Figure 8.33 A typical semi-split balanced single seal
Courtesy of Burgmann Industries GmbH & Co KG

for rapid replacement. Sufficient axial clearance must be available, when the gland plate is withdrawn, to allow the radial displacement of the longest component; probably the stationary seat. For a 50mm seal the stationary seat is 32mm long; this length is maintained up to 175mm seals.

Figure 8.33 shows a typical single balanced seal with split rotating and stationary seats. Split "O" rings are used on both seats. The stationary seat is double sided. Semi-split seals can be used up to 40 barg and 150 °C. Completely split single seals are available. The gland plate and all the internals are split. Gland plates cannot be attached to the pump stuffing box by studs; bolts must be used. Split single seals can handle 6.9 barg at up to 120 °C, see Figure 8.34.

Gas seals

Gas seals for pumps are available. A gas seal can be fitted as the second seal when a double seal is used. This arrangement is feasible when the pressurised liquid within the pump will change to vapour when the pressure is reduced. A throttle bush is fitted between the seals to restrict the flow of product to the second seal. Under normal operating conditions the small vapour leak from a pair of liquid faces is sufficient to allow a gas seal to operate satisfactorily. The interspace pressure, between the seals, can be monitored. If the primary liquid seal begins to fail the increased leakage will create a higher interspace pressure; this can be used to trigger an alarm. If the interspace pressure rises sufficiently the interspace will fill with liquid and

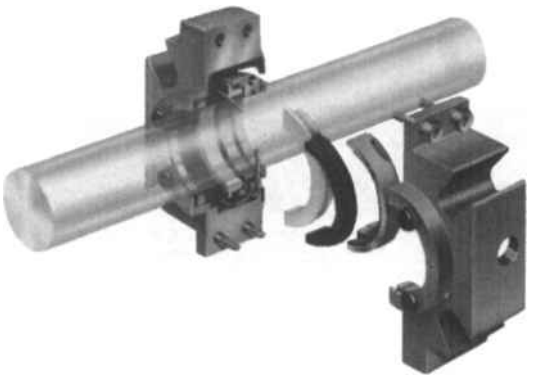

Figure 8.34 A typical split single seal
Courtesy of Flowserve Corporation

LIBERTY EXHIBIT 1034, Page 268
This book belongs to Robert Durham (rdurham@thewaylabs.com)
Copyright Elsevier 2024

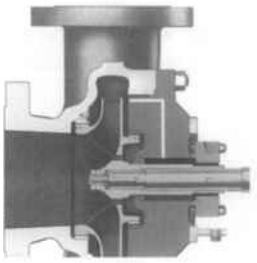

API 682 Plan 01 / ISO 5199 Plan 01 / ISO 13709 Plan 01

Internal recirculation from pump discharge to seal cavity.

Recommended for clean liquids only.

Internal drillings should have an orifice facility included to adjust recirculation flow to maintain stable seal face conditions for the specific operating conditions.

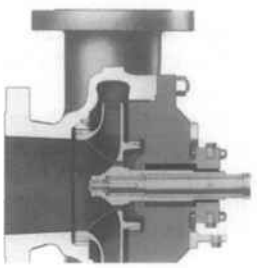

API 682 Plan 02 / ISO 13709 Plan 02

Seal housing or gland plate with two plugged connections for use with possible future circulation system.

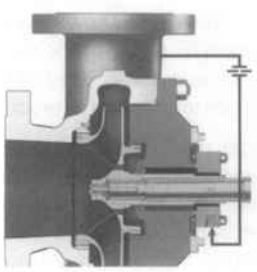

API 682 Plan 11 / ISO 5199 Plan 11 / ISO 13709 Plan 11 / VDMA 24297 Plan 6.1

Recirculation from pump discharge through a flow control orifice or device to the seal housing or gland plate.

ISO 5199 does not stipulate the orifice.

VDMA 24297 stipulates a flow control device.

The flow into the seal area is intended to enter close to the seal faces and then flow along the shaft into the pump.

Recommended for clean liquids.

Orifices are good flow control devices when the operating conditions are well defined (there is nothing for operators to adjust).

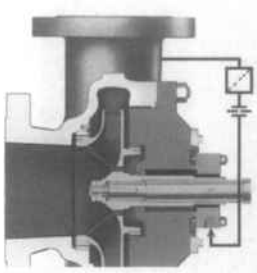

API 682 Plan 12 / ISO 13709 Plan 12 / VDMA 24297 Plan 6.2

Recirculation from pump discharge through strainer and flow control orifice or device to the seal housing or gland plate.

Recommended for clean liquids which do not normally contain solids.

Use API 682 Plan 31 / ISO 5199 Plan 05 / ISO 13709 Plan 31 which include a cyclone separator instead of a strainer for liquids which always contain solids. In this case the pump should be protected by a strainer or filter to remove oversize solids. The reject line from the cyclone separator should be piped into the suction before the pump strainer/filter. API 682 Plan 41 / ISO 13709 Plan 41 / VDMA Plan 6.4 include a cooler.

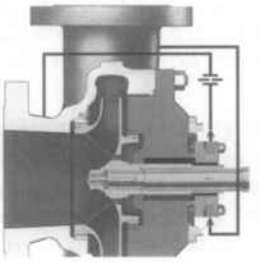

ISO 5199 Plan 03 / ISO 13709 Plan 14

Recirculation from pump discharge through seal cavity and return to pump suction.

ISO 5199 does not show orifice plates.

ISO 13709 is uncertain whether one or two orifices are necessary.

An orifice in the suction return line would be best.

Recommended for clean liquids.

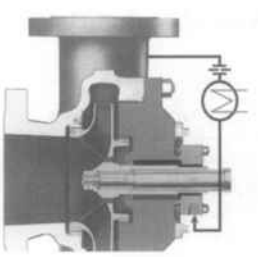

API 682 Plan 21 / ISO 13709 Plan 21 / VDMA 24297 Plan 6.3

Recirculation from pump discharge through a flow control orifice and a cooler to the seal housing or the gland plate.

ISO 5199 Plan 06 does not show any flow control device.

API 682 Plan 22 / VDMA Plan 6.4 or 6.8 are better because filtration is included.

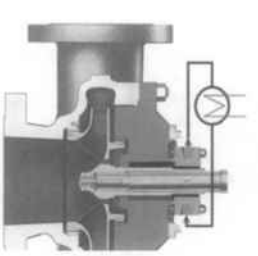

API 682 Plan 23 / ISO 5199 Plan 06 / ISO 13709 Plan 23 / VDMA 24297 Plan 6.5

Recirculation of seal cavity liquid by pumping ring through external cooler.

Filtration should be included to prevent any solids from accumulating in the cooler.

In some cases a thermo-siphon circulation may be possible removing the need for a pumping ring. Thermo-siphon systems won't be able to include filtration.

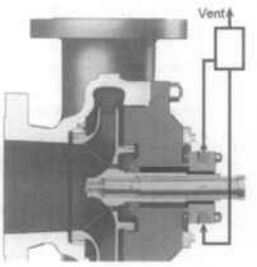

API 682 Plan 52 / ISO 5199 Plan 10 / ISO 13709 Plan 52

Pumped circulation of a buffer liquid contained in an unpressurised external reservoir.

Used with double seals and an unpressurised seal cavity.

The reservoir would normally be vented to a closed drains system or a flare stack.

ISO 5199 Plan 12 and VDMA 24297 Plan 6.9 use a vessel pressurised by the pump discharge; API 682 Plan 53 / ISO 13709 Plan 53 use an external pressure source; to create a supply of barrier liquid.

Note: No instrumentation or valving is shown. Only the connections for the piping plan described are shown. Piping plans can be combined for more complex systems.

Figure 8.35 Mechanical seal piping arrangements

the backup seal can operate as a normal liquid seal. The pump can be allowed to run until it is convenient to examine the primary seal.

The advantage of this arrangement is the lack of barrier or buffer liquid systems. This type of sealing can only be applied when the seal leakage is not considered as pollution or hazardous to the local environment. Gas seal faces are machined differently to normal liquid seal faces and are not interchangeable.

Secondary gas seals can be used with a buffer gas supply to prevent harmful vapour leakage. During normal operation it is buffer gas, usually nitrogen, which leaks through the secondary seal. If the primary seal fails some product vapour will escape. This may be allowable as a transient condition until the seal can

LIBERTY EXHIBIT 1034, Page 269
This book belongs to Robert Durham (rdurham@thewaylabs.com)
Copyright Elsevier 2024

be repaired. If high pressure gas is available the interspace can be pressurised with a barrier gas which prevents all product leakage. The pump user should check the site facilities for nitrogen supplies at the correct pressure.

The advantages of gas secondary seals should be considered carefully. It is difficult or impossible to check the condition of the secondary seal while the primary seal is functioning correctly. When the secondary seal is required there is no certainty the seal will function adequately. If the liquid is subject to any type of legislative control for emissions the regulatory authorities are unlikely to be impressed by secondary gas seals.

8.3.2.6 Materials

The material of the two seat faces can be the same or different. The combination of materials is determined, amongst other factors, by wear, strength, friction conditions, lubrication, chemical resistance and thermal conductivity.

Seal face materials	Combination qualities	Typical applications
Cr Mo steel alloy - carbon/graphite	Short-term dry running possibilities	Clean liquids, moderate pressures, moderate speeds
Ceramic - carbon/graphite	Short-term dry running possibilities	Clean and slightly contaminated water, water solutions, sea water, chemicals
Tungsten carbide - carbon/graphite	Short-term dry running possibilities, suitable for high temperature/pressure	Clean and contaminated liquids
Ceramic - PTFE	Very broad corrosion resistance	Clean liquids, not too hot
Silicon carbide - carbon	Short-term dry running possibilities, suitable for high temperature/pressure	Clean and contaminated liquids
Silicon carbide - silicon carbide	Very broad corrosion resistance, abrasion resistant	Clean and contaminated liquids
Silicon carbide - tungsten carbide	Very broad corrosion resistance, abrasion resistant	Clean and contaminated liquids
Tungsten carbide - tungsten carbide	Very broad corrosion resistance, abrasion resistant	Clean and contaminated liquids

Table 8.3 Properties of seal face material combinations

Table 8.3 shows some common combinations for the two seal faces. Tungsten carbide and ceramics can either be used in solid form or as a surface coating on, for example, stainless steel.

Material	Temperature of pumped liquid °C	Sealing element	Typically resistant to
Nitrile rubber a Low nitrate b Medium nitrate c High nitrate	 - 40 to + 80 - 35 to + 90 - 30 to + 100	O-rings, bellows, sleeves, etc	Water, mineral oils and other petroleum products
Ethylene-propylene rubber	- 40 to + 150	ditto	Animal and vegetable oil, chemicals. Not suitable for petroleum products
Silicone rubber	- 60 to + 200	O-rings	Weak and oxidising chemicals
Fluorocarbon rubber	- 5 to + 225	O-rings, bellows, sleeves, etc.	Chemically resistant with certain exceptions - e.g. ketones
PTFE Polytetrafluoro-ethylene	- 100 to + 250	ditto	Chemically resistant
Fibre reinforced PTFE	+ 150 to + 250	Sleeves, O-rings, etc.	Hot oils, asphalt, etc.
Perfluorelast (Kalrez)	- 30 to + 400	O-rings	Chemically resistant

Table 8.4 Elastomers for mechanical seals

Elastomers of different types, see Table 8.4, are used as flexible elements and for static seals. The material names used in Table 8.3 are generic. Each material may have up to five variants to optimise specific properties. The seal manufacturer can easily select the best variant(s) if accurate operating conditions are provided.

8.3.2.7 External systems

Mechanical seals can be fitted with various external systems to enable the seal to cope with the operating conditions. External systems are designed to protect the seal faces from adverse conditions and, in some cases, to assist in the sealing function.

Some popular system plans EN ISO 21049/API 682, ISO 5199, ISO 13709 and VDMA 24297 are listed in with illustrations to indicate the piping arrangements, Figure 8.35.

Seal piping arrangements, or seal harnesses as they are also known, can be quite complicated when the process liquid is hazardous. Figure 8.36 shows a multi-stage radially-split pump during manufacture. The pump is double-ended and so has two seals. The pressure vessel reservoirs for the Plan 53 systems are easy to see. To maintain the drive-end seal the coupling and the bearing housing must be removed. To maintain the non-drive-end seal the shaft-driven oil pump and the bearing housing must be removed. For a multi-stage pump of this style the seals are identical in theory but are manufactured slightly differently; the seals are handed.

To provide a sensible piping arrangement all the seal piping is confined to one side of the pump. One seal assembly is left-hand the other right-hand. The seal internals are identical except for the pumping ring; it is handed as well. Seal assemblies for double-ended pumps must be clearly marked as DE and NDE to avoid assembly mistakes. Figure 8.37 shows a typical Process and Instrumentation Diagram (P & ID) for the seal assemblies. The sealing systems are identical and separate. Notice that cooling is implemented by a coil inside the reservoir.

None of the standards and specifications reviewed include details of vent and drain pipework; this pipework is assumed to be fitted. Seal cavities and gland plates, supplied by the seal manufacturer usually have screwed connections. Clause 2.3.16 of API 682 states "Gland plates and seal chambers shall have provision for only those connections required by the seal flush plan." None of the popular seal systems mention vents or

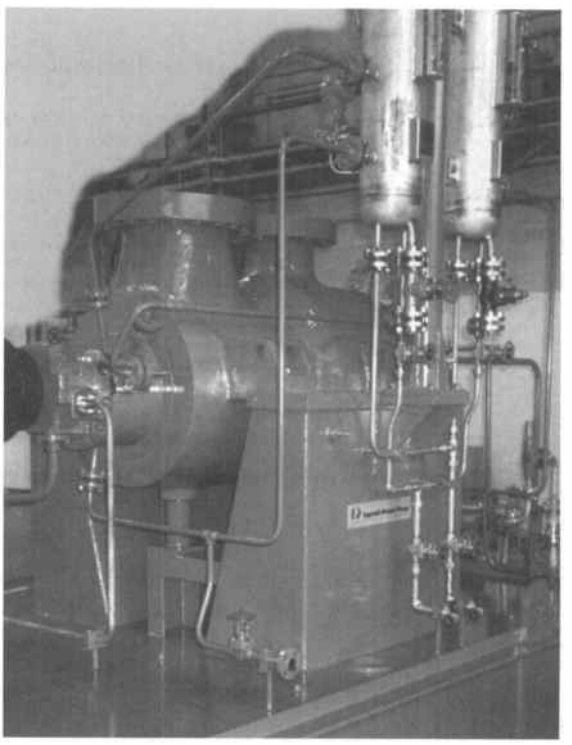

Figure 8.36 A typical multi-stage pump seal installation
Courtesy of Flowserve Corporation

LIBERTY EXHIBIT 1034, Page 270
This book belongs to Robert Durham (rdurham@thewaylabs.com)
Copyright Elsevier 2024

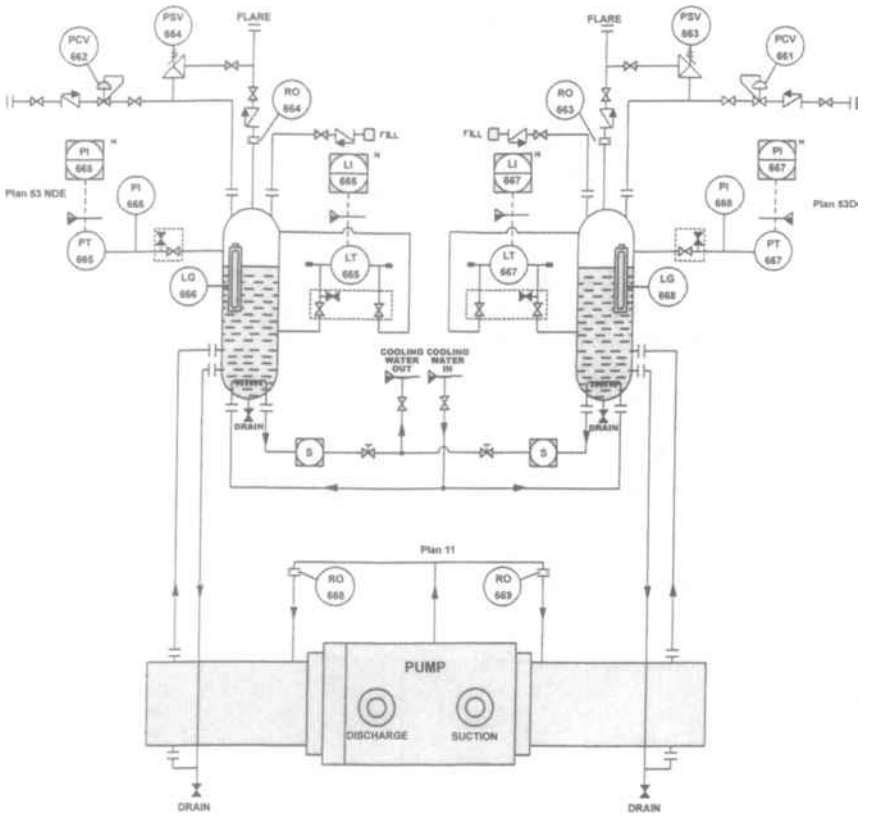

Figure 8.37 A typical double plan process and instrumentation diagram
Courtesy of Flowserve Corporation

drains for the seal cavity. However, the clause continues "If additional tapped connection points are specified.....". This is one of API's illogical clauses. This point illustrates why API committees find it difficult to adopt a logical "standards" approach to requirements.

The American pollution and safety requirements are not necessarily suitable for all locations and hazardous liquids. Seal piping is generally screwed into the seal chamber or gland plate. The piping specification may require the remainder of the piping to be butt-welded and flanged. The weakness of the screwed connection is overlooked. It is very rare for the seal chamber or gland plate connections to be seal welded. Seal welding of threaded connections is not recommended for corrosive applications. If the liquid/vapour is extremely hazardous all the pipe connections should be of very high integrity. Flanging to the circumference of a seal chamber or gland plate is not impossible.

Plans 52 and 53 require that the liquid must have some desirable properties, in areas where the process liquid is deficient. Some necessary qualities include:

- Safe, i.e. not hazardous
- Clean
- A better temperature, hotter or colder
- Good lubricant
- Good thermal conductivity

Buffer liquids are generally a hydraulic oil or water. These two have successfully coped with most applications in the past. Both are obviously safe at reasonable temperatures.

Table 8.5 indicates popular barrier liquids which have been used extensively in the past.

Liquid	Temperature range
Ethylene chloride	-130 to -15 °C
Propanol	-120 to + 0 °C
Ethanol	-105 to +50 °C
Methanol	-90 to +40 °C
Butanol	-80 to +90 °C
Paraffin	-30 to +160 °C
Hydraulic oils	-30 to +80 °C
Mineral oils	-10 to +200 °C
Water	+5 to +80 °C
Ethylene glycol	0 to +175 °C
Vegetable oils	+10 to +130 °C
Glycerine	+100 to +260 °C
Heat transfer oils	+100 to +350 °C

Table 8.5 Traditional barrier liquids

As mentioned earlier one of the criteria was for the liquid to be safe. This requirement is necessary in case the liquid leaks out of the second seal. These are some of the liquids "standardised" in past installations:

- Ethylene chloride; ethyl chloride, chloroethane — highly flammable and toxic
- Propanol — flammable and slightly toxic
- Ethanol, ethyl alcohol — flammable, differing opinions about its health risk
- Methanol, methyl alcohol — flammable and toxic
- Butanol, butyl alcohol — flammable and toxic

These liquids are covered by both UK and USA safety legislation, and by the ADR transportation regulations, see Section 17.1.2 in Chapter 17. Obviously the use of these liquids as barriers or buffers needs very careful consideration of the immediate pump surroundings, especially if the pump is situated in an enclosed pump house.

LIBERTY EXHIBIT 1034, Page 271
This book belongs to Robert Durham (rdurham@thewaylabs.com)
Copyright Elsevier 2024

Alternative safe barrier liquids should be considered for all applications. Some liquids which have been tested by seal manufacturers include water + soluble oil, water + antifreeze, polyalkylene glycol and synthetic oil.

Special attention should be paid to the external systems with regard to pressure and the consequences of unintentional shutdown or breakdown.

8.3.2.8 Maintenance

The operating life of any seal is primarily dependent upon selecting the right seal and the right material, i.e. the optimum with regard to the type of duty. The service life as well as the leakage rate are further influenced by the condition of the pump and its design and by the manner in which it is operated, continuous or intermittent, etc. Depending upon the speed, a pair of seats should last for at least one year in a clean liquid environment.

Regular maintenance of a mechanical seal is limited to checking for leakage once a week. If the pump is handling a hazardous liquid controlled by safety legislation, the normal vapour leakage may have to be measured and logged. From the time when leakage appears as drops, the seal can usually be operated for a week or two before the seats need to be replaced. It will also be necessary to check the function of any external barrier or buffer liquid system.

8.3.2.9 Trouble-shooting

Leakage is the only indication of a faulty mechanical seal. But to be able to evaluate if and when the seal must be dealt with, it is not sufficient just to notice leakage. The occurrence of leakage does not provide sufficient information as to the course of action to be taken. It is also necessary to evaluate the circumstances, when and where, and the appearance of the leaking liquid.

Table 8.6 reviews some typical problems and offers remedies. In more difficult cases the pump and seal manufacturers should be contacted and should also be present when the seal is disassembled since the cause can easily be destroyed during disassembly. Always read the manual before carrying out any work on a pump or seal.

Problem	Probable cause	Remedy
Newly installed seal leaks badly when stationary.	Incorrect installation. Rotating seat hang-up.	Check manual, disassemble completely. Check cleanliness. Rebuild.
Newly installed seal leaks moderately when stationary and when running.	Damaged 'O' rings.	Strip, check cleanliness and rebuild.
	Seat faces not flat.	Depending upon the materials of the seat faces the seal may bed-in.
Newly installed seal is pressure tight when tested but leaks when running.	Single spring seal running in wrong direction.	Disassemble and check spring handing.
	Incorrectly fitted stationary seat.	Read manual, disassemble and rebuild.
	Shaft run-out too great.	Check run-out, check bearings. Replace parts as necessary.
	Eccentricity between shaft and sleeve.	Check run-out of sleeve to shaft. Remove sleeve and check sleeve bore to sleeve OD.
	Vibration.	Check for shaft or sleeve run-out.
Seal begins to leak after a short period of operation.	Debris in process liquid or operating condition transients during start-up.	When process conditions have stabilised, disassemble seal and rebuild.
	Seat or elastomer materials not suitable for operating conditions.	Check operating conditions against specification. Consult pump and seal manufacturer.
	Seat or elastomer materials not suitable for cleaning or stationary conditions.	Consult pump and seal manufacturer.
Seal was working correctly then suddenly starts to leak badly.	Cracked seat(s).	Thermal shock or dry running. Investigate cause and prevent repetition.
	Bearing failure.	Inspect bearings, replace as necessary.
	Loss of barrier/buffer liquid.	Add instrumentation to external system.

Table 8.6 Trouble-shooting guide for mechanical seals

8.4 Reciprocating rods

There are two main differences between rotary shafts and reciprocating rods:

- A reciprocating rod tends to carry liquid through the seal,
- A reciprocating rod stops moving twice every cycle.

Because of these differences, the technology used for rotating shafts is not always applicable to reciprocating applications. Reciprocating seals can also be placed in one of two categories; stationary seals and moving seals. Moving seals are usually associated with piston seals.

Modern plunger pumps operate at mean linear velocities of up to 2 m/s, and piston pumps up to 1 m/s. The maximum instantaneous velocity is about 20% greater. A wide variety of seals are available, however some are for hydraulic power applications, e.g. piston/cylinders for hydraulic actuation. Hydraulic seals are generally suitable for 0.5 m/s and are intended to work with hydraulic oil, water-oil emulsions or water. Hydraulic seals may not be suitable for continuous operation in process pumps and seal materials may not be resistant to the wide range of liquids generally encountered.

The need for rod seals can sometimes be completely eliminated by the use of diaphragms or bellows. Short stroke pumps, typically metering and dosing pumps, have successfully used diaphragms and bellows to eliminate the leakage along rods. Precautions must be taken in the event of fatigue failures and extra instrumentation can be fitted for failure detection. Diaphragms and bellows cannot be applied to longer stroke machines because of the space required to accommodate the stroke.

8.4.1 Lip seals

Lip seals, similar in design to rotary seals, are used for preventing oil escaping along crosshead extensions where they pass through the crankcase wall. Similar seals are mounted in reverse to prevent the ingress of dirt and moisture. Seals for this type of application are limited to about 100 °C.

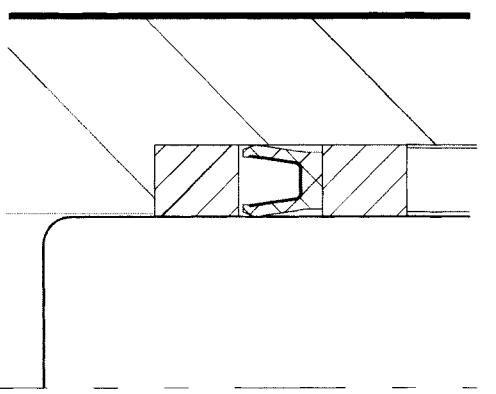

Figure 8.38 "U" ring for process seals

LIBERTY EXHIBIT 1034, Page 272
This book belongs to Robert Durham (rdurham@thewaylabs.com)
Copyright Elsevier 2024

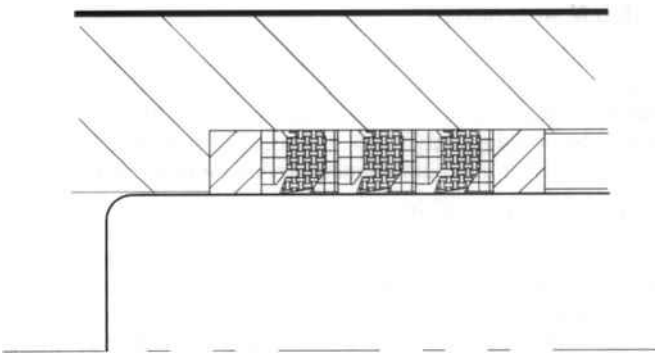

Figure 8.39 Semi-chevron packing set

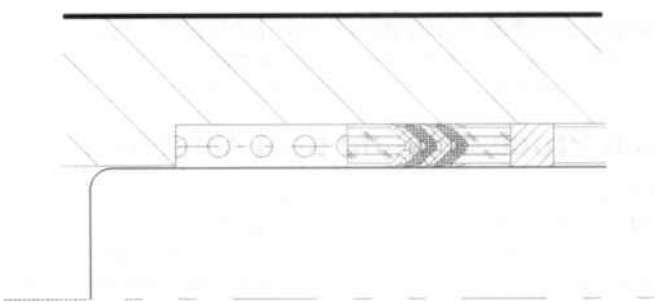

Figure 8.40 Spring-loaded chevron packing

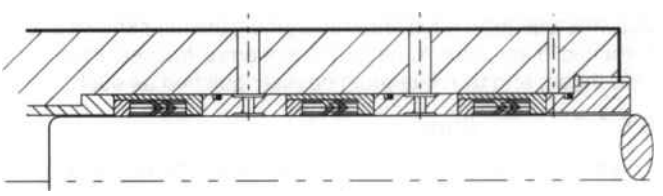

Figure 8.41 Triple packed cartridge chevron stuffing box

Special lip seals in the form of "U" rings can be used for process sealing, see Figure 8.38. Generally made of FKM elastomers or PTFE and energised by pressure plus a stainless steel spring, these seals can be capable of sealing up to 300 bar. Like soft packing rings, "U" rings can be stacked in series. The "U" ring is not compressed axially and must be fitted with a gland which locks to provide a fixed installation gap. No adjustment is possible or necessary.

Another style of lip seal which has proved successful is the semi-chevron; the chevron style is discussed later. The semi-chevron is a combination of styles; soft packing and a chevron ring, see Figure 8.39. The outside diameter of the packing is almost flush; the axial gland load compresses the OD against the bore of the stuffing box. The bore of the packing is recessed to form pockets for the sealing lip. The sealing force on the lip is initiated by interference and supplemented by liquid pressure. The packing is not adjustable and requires no maintenance. The gland is tightened to provide an initial compression on the packing but no further adjustment is necessary.

Semi-chevrons are available for over 200 bar at temperatures up to 105 °C. A packing set normally consists of three units with three sealing lips. They can also be arranged in series. A triple packed box has been operated successfully. Lantern rings between the sets can be used for buffer liquids or lubrication.

Soft packing can be used for any pressure. At high pressures, over 300 bar say, the routine maintenance, adjustment, can become tiresome. Chevron packing was designed to remove the necessity for adjustment. Chevron packing has internal and external sealing lips. Packing sets can be compressed manually, but this requires skill and experience and is not recommended. Most sets are spring-loaded and the gland is locked solid, see Figure 8.40. Spring loading can be by a single large spring or multiple small springs.

Chevron sets are available in various compounds and allow operation over 2000 bar at temperatures up to 290 °C. Pure PTFE is available but is not suitable for higher speed pumps.

Chevron packing can be fitted as a cartridge assembly. Offshore pumps, handling hazardous liquids, have been equipped with three chevron sets in series with buffer and lubrication systems, see Figure 8.41. For most high pressure applications, lubrication can greatly extend packing life.

In the past only pump manufacturers produced cartridge packing sets. The chevron packing was purchased from the packing manufacturer in the normal way but the pump manufacturer designed and manufactured the cartridge to suit a specific application. At least one packing manufacturer is now offering cartridge assemblies. The cartridges are pre-compressed by a circlip on the low pressure side of the packing. This method of construction reduces the strength of the cartridge, which is already a fairly light assembly compared to the rest of the stuffing box. The structural stability of thin wall cartridges should be fully investigated before designing or approving the rest of the stuffing box. Cartridge designs, which use the full width available, plunger/rod od to stuffing box id, to transmit the axial forces are much stronger in practice.

8.4.2 Soft packing

Soft packing for reciprocating rods is very similar to the soft packing used for rotary shafts. Because of the different running conditions the design limits are modified, Table 8.7 indicates the scale of the modifications.

Rotary		Reciprocating	
Speed m/s	Pressure bar	Speed m/s	Pressure bar
2	5	1	150
10	10	1	100
25	20	2	250

Table 8.7 Comparison of soft packing capabilities

8.5 Process liquid seals for reciprocating rods

Seals on reciprocating rods, unlike rotodynamic pump shaft seals, operate alternatively at suction and discharge conditions. If multiple seals are fitted, the seals behind the primary seal may operate at reasonably constant conditions.

8.5.1 Operating principles

Soft packing seals for reciprocating rods operate on the same principles as rotary seals. Allowances must be made for the rod attempting to drag the liquid through the packing. Most stuffing boxes have between three and seven rings of packing. Fitting too many rings is as bad as fitting too few. With too few rings it is difficult to create adequate pressure drop within the stuffing box and leakage is always great. With too many rings the outer rings receive too little lubrication and burn up.

Proprietary pump specifications which specify a fixed number of rings in the stuffing box are misguided. Pressures higher than the pump operating pressure can be generated in the stuffing box and the packing rating must take this into account.

8.5.2 Design variations

The design of stuffing boxes for reciprocating rods generally follows the same pattern as rotary shafts. The major exception is that mechanical seals are not available as an option. Small pumps may have a diaphragm or bellows to eliminate the leak-

LIBERTY EXHIBIT 1034, Page 273
This book belongs to Robert Durham (rdurham@thewaylabs.com)
Copyright Elsevier 2024

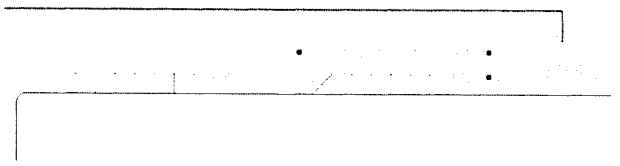

Figure 8.42 Stuffing box with adjustable primary and secondary packing

age problem. With packing, more sets are added as the liquid becomes more hazardous or problematic to seal.

Section 8.4.1 indicated that lip seals can be stacked in series as in Figure 8.41. Soft packing sets can also be stacked in series; the stuffing box design becomes complicated, correct adjustment is dubious and the rod sizes permissible within a fixed centre distance are greatly reduced.

Figure 8.42 shows a stuffing box with two sets of independently adjustable soft packing, both rated at 100%. Lubrication or a buffer liquid can be supplied to the middle lantern ring. A quench could be applied across the atmospheric side of the second packing. Additional rings could be fitted after the second lantern ring but some liquid supply would definitely be required.

Just as with rotary sealing systems, reciprocating rod seals can be multiple units; it is important to specify or know whether secondary/tertiary seals are rated for full pressure. When handling difficult liquids the use, if possible, of non-adjustable packing styles will achieve better packing life and pump availability.

8.5.3 Packing material

Packing materials suitable for rotary shafts, see Table 8.1, in general, are suitable for reciprocating applications. Reciprocating rods do not have sleeves, the rod may be hardened or coated. Packing with Aramid® or Kevlar® fibres tends to be abrasive. Very hard coatings, such as chrome oxide or tungsten carbide, should be used.

Braided and plait packing is normally cut to length from a roll. Reciprocating rods also use moulded packing rings which are solid and must be assembled from the end of the rod. Rings can also be machined from solid material. Special profiles and diameters can easily be accommodated when the rings are machined.

8.5.4 External systems

External systems are similar to their rotating counterparts except barrier liquids are not used and the seal cavity cannot be flushed. Lubrication is the most common system. The lubricant is pumped by a special single cylinder reciprocating pump to each stuffing box. The lubricant mixes with the product and some is lost.

Low pressure quench is the second most popular system. The quench liquid is constrained by a close fitting bush in the gland or an auxiliary packing set.

Heating and cooling of the packing can be accomplished by circulating liquid through a lantern ring. Because the rod is reciprocating, liquid is carried to the packing at both sides of the ring. The rod is heated or cooled by direct contact with the liquid.

Flushing through the throat bush is popular on solids handling pumps and for liquids which may crystallise in the packing. Flushing can be low pressure on the suction stroke when supplied by a low pressure external source. High pressure flushing is like lubrication, a single cylinder from another pump is piped to each stuffing box. The flush injection is synchronised to flush on the back stroke when the rod would tend to draw solids into the box.

8.5.5 Maintenance

Maintenance of adjustable soft packing is a skilled job. The pump and packing manufacturers' instructions must be followed for good results. If site labour is poor or the site is inaccessible, non-adjustable packing should be specified. See Section 8.3.1.5 for the maintenance section for rotary shafts.

8.5.6 Trouble-shooting

See Section 8.3.1.6. Except for the reference to bearing wear and packing rotating, all comments are valid. If spring-loaded packing runs too hot and tries to stick to the rod it is possible to drag the packing axially in the stuffing box. This can cause longitudinal scratches on the packing OD. It is possible to have rods running eccentrically in the stuffing box. Periodically, the rod should be checked to ensure it is central. Some rod connections allow for radial misalignment, others do not. As the pump wears, crossheads may drop in their guides, effectively lowering the centre of the rod. If eccentric packing wear is a problem the cylinder alignment should be confirmed.

8.6 Process liquid seal selection

As can be seen from the preceding Sections, sealing technology is complicated and there are a wide range of choices open to the pump designer and pump user. Environmental controls, together with increased personnel safety requirements, have imposed limitations on the allowable leakage rates of some liquids and vapours.

A logical approach must be adopted for seal selection to achieve a sound, practical, operational solution. The pump and seal manufacturer must know everything the user knows about the liquid. If any approximations are needed, the user must provide these; and the data must be distinguished as such.

8.6.1 Process liquid

The seal selection process must start with the process liquid itself. If the process liquid is legally registered as hazardous then limits on exposure and vapour concentrations will be published. From the design of the immediate pump surroundings, an allowable concentration can be converted to an allowable leakage rate. If a rotodynamic pump is being considered and the liquid is so hazardous that leakage cannot be tolerated, then Section 8.1 should be read again and a sealless pump selected. If a reciprocating pump is considered for very hazardous liquids, try to use small pumps with diaphragms or bellows. If the liquid is only flammable, then flammability limits will be published and an allowable leakage can be calculated.

Consideration must be given to what happens to the liquid when it does leak out of the seal:

- Will it remain liquid or will it vaporise?
- If it remains liquid, will it cause damage to the pump or the immediate surroundings?
- Can it be piped to normal drains or must it be piped in closed drains for treatment?
- If the escaped liquid vaporises; is the vapour heavier or lighter than air?
- Where will it accumulate? What damage will it cause?

Obviously the nature of the process liquid affects more than just the seal selection. However, the pump seal may be one of the few places where the liquid has a chance to escape.

8.6.2 Size, speed and pressure

The rate of leakage from different types of seal depends on the pressure at the seal, shaft diameter, speed and, in the case of soft packings, also to a very large extent upon maintenance. The following are given as guide values:

LIBERTY EXHIBIT 1034, Page 274
This book belongs to Robert Durham (rdurham@thewaylabs.com)
Copyright Elsevier 2024

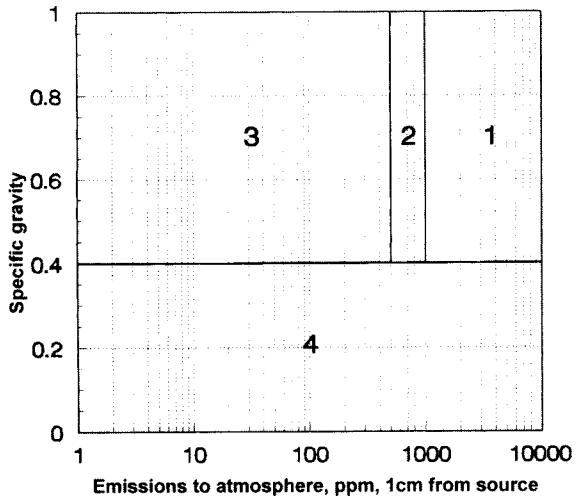

Chart area	Acceptable technology
1	Single, double or tandem seals acceptable
2	Single seals may be acceptable. Depending on actual operating conditions, seal size, pressure and temperature, tandem or double seals may be required to meet emission regulations.
3	Tandem or double seals acceptable.
4	Double seals required.

Figure 8.43 Mechanical seal selection guidelines

- Mechanical seal, single, 0.2 to 20 cm^3/hour
- Soft packing, single, functioning well and properly maintained, 5 to 50 cm^3/hour

The values refer to seals working correctly. When a seal begins to fail, the increase in leakage is dependent upon the whole stuffing box design. Leakage should also be considered as a proportion of the pump flow. Soft packing leakage rates can be as low as 0.01%.

Figure 8.43 shows guidelines to assist with mechanical seal design choices. The graph applies to mechanical seals up to 152 mm diameter, pressures up to 40 bar and speeds up to 3600 rev/min.

Leakage should be a part of the design philosophy. Not "What shall we do if the seal leaks?", but "What shall we do with the leakage when the seal leaks?". When treated correctly, leakage can be recycled and is not necessarily a waste disposal problem.

8.6.3 Local environment

The local environment surrounding the pump plays a important role in the consideration of leakage. If the pump is in an enclosed pump house, leakage will tend to accumulate within the it depending upon the arrangements made for ventilation. If the pump house is unmanned and personnel visits are once a week, the requirement for ventilation will be low. Vapour may accumulate to toxic concentrations for personnel or form an explosive mixture. Mechanical ventilation may be necessary, or the outlet from the pump house may have to be ducted to a flare stack for disposal.

If the pump house is open, leakage will tend to disperse naturally. If the liquid has an obnoxious smell, this may not be acceptable. If the pump site is close to habitation, natural dispersion may cause problems in the community. Remote pump sites with open pump installations avoid local dispersion problems. The concentration is very dilute, perhaps undetectable, before reaching any community.

One remote type of installation which has special problems is the offshore installation. Offshore installations have limited escape possibilities if anything does go wrong. Although surrounded by water, the water is not always safe. Offshore in the Gulf of Mexico the water is relatively safe, whereas in the North Sea, especially in the winter, the water is definitely not safe. Extra safety precautions must be taken to protect personnel.

If leakage is damaging to the environment then not only the local environment must be considered. The global environment may be at risk as well.

8.6.4 Cost

The initial cost for soft packing materials is relatively low compared with the initial cost for a mechanical seal. The initial cost is, however, not of prime importance and the whole-lifecost is largely determined by a number of secondary costs associated with maintenance, leakage and external systems.

The level of routine maintenance required is dependent, not only on the seal, soft packing or mechanical seal, but also on the operating conditions. High pressure and high speed require more maintenance. The possibility of changing the working pressure is not usually within the options available.

Changing the pump speed is a viable option. The increased cost of a larger pump must be weighed against the reduced maintenance costs and the extended operating time between routine shut-downs. Individual construction and operating costs are required to properly evaluate this option. The user should always have an operating strategy when pumps are purchased and the pump manufacturer should be aware of the target operating time between shut-downs. If the level of maintenance skills at the site are low, it may be best to fit cartridge seals where possible. Complete cartridges could be refurbished by the seal manufacturer ready for replacement.

The cost of liquid lost due to leakage may be considerable. Additional initial cost should be considered to reduce leakage or recycle leakage. The feasibility of either course will be dependent upon the difficulties of sealing the liquid. Suitable barrier or buffer liquids may not be available or cause as much trouble as the process liquid. Loss of any liquid in some closed loop processes may cause tremendous problems; a seal-less pump may be necessary even if the liquid is safe.

External systems may require extra instrumentation or maintenance. Some stuffing box lubricators may require the oil reservoir to be topped up every 24 hours. Extra storage space will be required for special lubricants and barrier/buffer liquids.

The true cost of sealing solutions is difficult to analyse. Very good data must be accessible and the data trends must be stable. Possible changes in economic conditions, over the life of the pump, may necessitate changes in sealing philosophy. Can the pump selected be adapted to other sealing systems ?

8.6.5 Standardisation

EN ISO 21049 specifies requirements and gives recommendations for sealing systems for centrifugal and rotary pumps used in the petroleum, natural gas and chemical industries. It is applicable to hazardous, flammable and/or toxic services where a greater degree of reliability is required for the improvement of equipment availability and the reduction of both emissions to the atmosphere and life-cycle sealing costs. It covers seals for pump shaft diameters from 20 mm (0.75 in) to 110 mm (4.3 in).

This Standard is also applicable to seal spare parts and can be referred to for the upgrading of existing equipment. A classification system for the seal configurations covered by this International Standard into categories, types, arrangements and orientations is provided.

The 2004 edition of ISO 21409 is identical to API 386 3rd edition.The most widely used Standard for seals is probably DIN 24960; parts of this were extracted for ISO 3069. DIN 24960 specifies dimensions for mechanical seals, seal cavities, seal

LIBERTY EXHIBIT 1034, Page 275
This book belongs to Robert Durham (rdurham@thewaylabs.com)
Copyright Elsevier 2024

designations and materials. DIN 24960 was referenced in the original DIN standards for standard water and chemical pumps, now ISO 2858 and ISO 5199. 24960 applies to shafts from 10 mm to 100 mm. Single seals, double and tandem seals are specified.

The Swedish pulp and paper industries technical cooperative has published a standards for soft packings, SSG 1300, 1320 and 1321 which comprises dimensions, installation and materials.

A recent change to sealing standardisation is the introduction of ANSI/API RP682, Shaft sealing systems for centrifugal and rotary pumps. Even though the title states "Shaft sealing systems", the standard only deals with mechanical seals, there is no mention of soft packed boxes. API 682 has replaced the seal section of API 610.

It has already been stated that API is controlled by pump users. Pump manufacturers have made it known to API that they would like to stop redesigning their pumps every 4 or 5 years to comply with the users latest fashion. API 682 cannot be applied universally to all existing pumps because of the enlarged seal cavities required. While it is recognised by most people that larger seal cavities, not extended soft packed stuffing boxes, can extend mechanical seal life, it is not possible to impose such drastic changes in a short time span.

EN ISO 21049 is only applicable to seals between 30 mm and 120 mm, temperatures from -40 °C and 260 °C, and pressures from 0 to 34.5 barg. A list of applicable liquids includes; water, sour water, caustics, amines, some acids and most hydrocarbons. "Some acids" obviously needs clarification. Only cartridge seals are acceptable to API 682. Hook sleeves are not acceptable. The complete seal, including sleeve, must be removable so that the complete assembly can be tested. The minimum requirement is a single balanced seal.

EN ISO 21049 has standardised "qualifying" tests for seals based on four test liquids; water, propane, 20% NaOH and mineral oil. The results of the qualifying test must be submitted as part of any seal quotation. 21049 does allow pump testing with alternative face materials when the contact face materials are unsuitable for the test liquid, water.

EN ISO 21049 has a comprehensive seal selection procedure comprising 10 pages. Seal type/style are covered, as are material recommendations, piping plans and guidance for selecting barrier/buffer liquids.

EN ISO 21049 can be used as a reference source for other industries; it contains much useful information. However, the contents should not be considered in isolation. Discussions with seal manufacturers may provide better, alternative solutions to difficult applications.

Pump users who have large numbers of pumps usually standardise on one seal manufacturer. This type of standardisation is intended to reduce inventory cost and space, and also reduce the chances of fitting incorrect parts to a seal. The pump user can also benefit by increasing his bargaining power when purchasing a large number of spares from one source. Seal manufacturers with a wide product range profit from this philosophy.

In some applications, very special seals are required, and manufacturers must be selected for a specific product.

8.7 Useful references

API 610 Centrifugal Pumps for General Refinery Services. (In Appendix D and E to API 610 descriptions are given of mechanical seal configurations, circulation systems (circulation of a separate medium, circulation of the pumped medium), cooling systems and a coding system for seals.)

DIN ISO 5199 and VDMA 24297 are identical with the meaning of API 610 in many decisive points.

NF EN 12756 Mechanical seals - Principal dimensions, designation and material codes, April 2001, Association Francaise de Normalisation.

ANSI/API 682 Shaft Sealing Systems for Centrifugal and Rotary Pumps, 3rd Edition.

EN ISO 21049:2004 Pumps - Shaft sealing systems for centrifugal and rotary pumps.

ISO 3069:2000 End-suction centrifugal pumps - Dimensions of cavities for mechanical seals and for soft packing.

DIN 24960 End Suction Centrifugal Pumps - Dimensions of cavities for mechanical seals and for soft packing.

VDMA (German Engineering Federation), PO Box 71 08 64, 60498 Frankfurt/Main, Germany, Tel 069 66030, Fax: 069 6603 1511, Email: Kommunikation@vdma.org, www.vdma.com

Association Française de Normalisation (AFNOR), 11, rue Francis de Pressensé F-93571 La Plaine Saint-Denis Cedex France, Tel:01 41 62 80 00, Fax: 01 49 17 90 00, www.afnor.fr.

SSG Teknik AB (Swedish pulp and paper industries' technical co-operative organization), Köpmangatan 1, SE-852 31 Sundsvall, Sweden, Tel: 060 123850, Fax: 060 150710, Email: info@ssg.se, www.ssg.se.

Seals, A G Fern with BS Nau, Oxford University Press, ISBN 0-19-859148-9 / 0198591489.

Seal Users Handbook, R M Austin, B S Nau, British Hydromechanics Research Association, ISBN: 0900983337.

Axiale Gleitringdichtungen Gleitringdichtung, E Mayer, 1982, VDI-Verlag GmbH.

The British Pump Manufacturers' Association (BPMA),The McLaren Building, 35 Dale End, Birmingham B4 7LN UK, Tel: 0121 200 1299, Fax: 0121 200 1306, enquiry@bpma.org.uk, www.bpma.org.uk.

Hydraulic Institute, 9 Sylvan Way, Parsippany, NJ 07054, USA, Tel: 973 267 9700, Email: gromanyshyn@pumps.org, www.pumps.org.

BHR Group Ltd, The Fluid Engineering Centre, Cranfield, Bedfordshire MK43 OAJ UK, Tel:01234 750422 , Fax: 01234 750074 , Email: solutions1@ bhrgroup.com, www.bhrgroup.com.

LIBERTY EXHIBIT 1034, Page 276
This book belongs to Robert Durham (rdurham@thewaylabs.com)
Copyright Elsevier 2024

Shaft couplings 9

9.1 Introduction
9.2 Types of coupling
9.3 Misalignment
9.4 Forces and moments
9.5 Service factors
9.6 Speed
9.6.1 Example
9.7 Size and weight
9.8 Environment
9.9 Installation and disassembly
9.9.1 Alignment
9.9.2 Baseplates
9.9.3 Attachment
9.10 Service life
9.11 Shaft alignment
9.11.1 General
9.11.2 Alignment measurement
9.11.2.1 Reference line misalignment
9.11.2.2 Alignment procedure
9.11.2.3 Choice of method
9.11.3 Determination of shim thickness
9.11.3.1 Example
9.11.4 Graphical determination shim thickness
9.11.5 Optical alignment
9.12 Choice of coupling
9.12.1 Costs
9.12.2 Factors influencing choice
9.13 Machinery guards
9.14 Useful references

LIBERTY EXHIBIT 1034, Page 277
This book belongs to Robert Durham (rdurham@thewaylabs.com)
Copyright Elsevier 2024

9.1 Introduction

A shaft coupling transfers torque between two in-line, or nearly in-line, rotating shafts. The magnitude of the torque in the shafts is equal, although slipping and disengagement can cause speed variations. In its simplest, and perhaps oldest form, the coupling acts as a means of joining shafts. Another function is to join two shafts which are not necessarily in perfect alignment with each other. The coupling in this case must be capable of absorbing such misalignment. Modern couplings, between pump and driver, must be capable of rapid disassembly.

9.2 Types of coupling

Shaft couplings can perform many different functions and have varying characteristics. They are usually divided into three main groups with sub-divisions, namely:

Non-disengaging couplings

- Solid
- Torsionally rigid
- Torsionally flexible

Disengaging couplings

- Clutch with manual over-ride mechanism
- Free-wheeling clutches

Limited torque couplings

- Non-controlled
- Controlled and variable

Some of the requirements for flexible couplings, including definitions, performance and operating conditions, dimensions of bores, reference to components as well as an appendix on alignment are to be found in BS 3170. Friction clutches and power-take-off assemblies for engines, and their requirements are included in BS 3092. Process pumps to API 610 standard have spacer couplings in accordance with API 671.

For pump applications it is usual to use a coupling from the first group above, although special installations make use of disengaging clutches and limited torque couplings. Examples being centrifugal clutches to reduce starting loads when using a direct-on-line starting induction motor. Hydrodynamic clutches can be used for reducing starting loads and speed regulation. Combinations of brakes and reverse locks can be used to prevent reverse pump rotation for example.

Power recovery hydraulic turbines are often coupled to the non-drive end of pump motors so that the turbine can unload the motor. The coupling used is a free-wheel type with manual over-ride so that the pump/motor can start-up before the turbine. Once the turbine runs up, as it tries to rotate faster than the motor, the clutch locks automatically and power is transmitted.

Non-disengaging couplings maintain, after assembly, a more or less flexible but continuous transmission of the rotational movement. The connection is only broken for disassembly, repair, etc. Flexible couplings of one form or another, which are capable of absorbing residual misalignment, are most common, although solid couplings do have their areas of use, see Figure 9.1.

One example is the split muff coupling, the main advantage being its ease of assembly. It is best used for low speed applications due to the difficulties in balancing. The sleeve coupling is mounted and removed by oil-injection; being almost symmetrical, balancing is easy.

Another example is in the case of long-shaft pumps and stirrers, Figure 9.2, where, because of space requirements when disassembling, it is necessary to split the shaft. Production technicalities also necessitate the joining of long shafts. The most usual couplings in these cases are disc or flanged couplings.

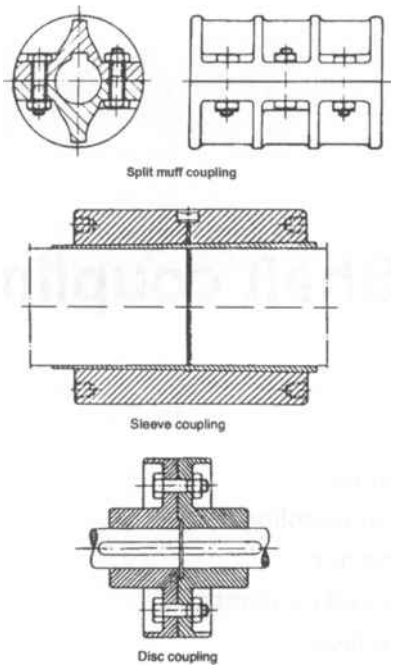

Figure 9.1 Examples of solid shaft couplings

Torsionally rigid flexible couplings consist of various types of diaphragm and gear couplings, see Figure 9.3. Couplings with a single functional element have the ability to take up angular and axial misalignment. Couplings with two functioning elements separated by a fixed "spacer", are also able to cope with radial misalignment, whereby the magnitude of the radial misalignment is determined by the angular misalignment multiplied by the distance between the coupling elements.

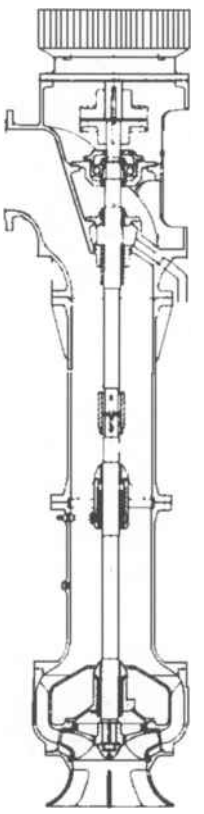

Figure 9.2 Long-shaft vertical pump

LIBERTY EXHIBIT 1034, Page 278
This book belongs to Robert Durham (rdurham@thewaylabs.com)
Copyright Elsevier 2024

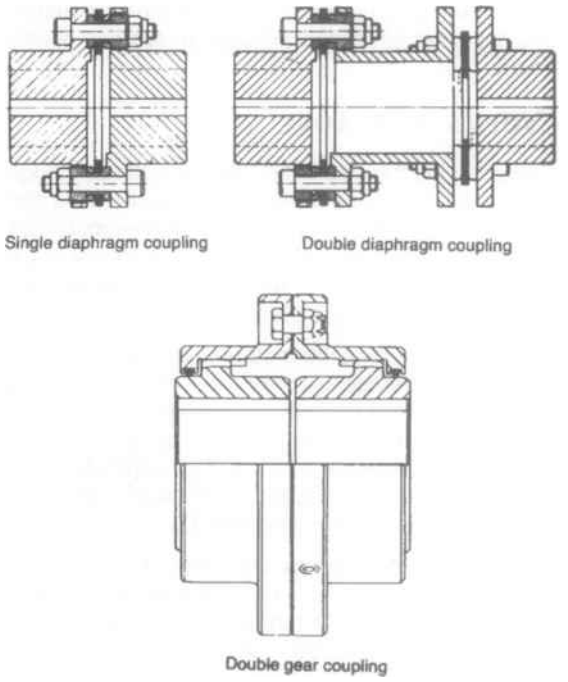

Figure 9.3 Examples of torsionally rigid flexible couplings

Torsionally flexible shaft couplings usually consist of flexible rubber, plastic or even steel elements, Figure 9.4. The first mentioned coupling elements require somewhat larger coupling diameters because of their lower load carrying capacity. Single element couplings can accommodate radial misalignment as well as angular and axial. The flexible spring coupling is interesting because it is designed to have a variable torque/deflection characteristic. Together with dampening provided by the grease lubricant, the variable torque/deflection characteristic provides a powerful torsional vibration dampener.

The torsionally flexible couplings shown can be built with two working elements and a spacer to allow additional radial misalignment. In order to simplify disassembly and service of some machines, spacer couplings are preferred, Figure 9.5. Removal of the spacer enables the rotating elements to be serviced without necessitating the removal of the whole machine. API 610 specifies 5" spacer lengths as a minimum. EN 22858, ISO 2858, for 16 bar back pull-out pumps, specifies spacer lengths from 100 mm to 180 mm depending upon pump size.

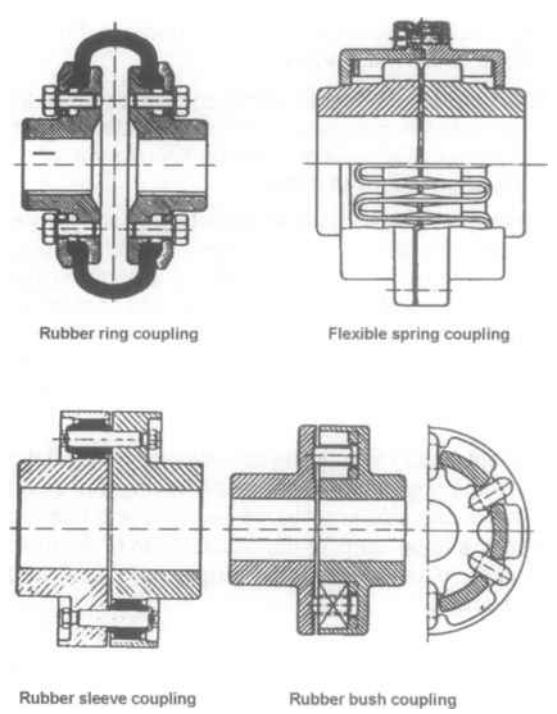

Figure 9.4 Examples of torsionally flexible couplings

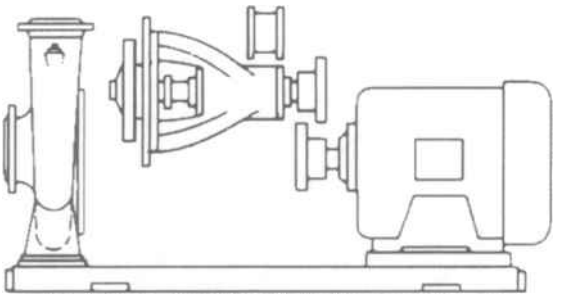

Figure 9.5 Simplified disassembly using a spacer coupling

9.3 Misalignment

Three types of movement or deviation can occur between two shafts, see Figure 9.6, namely:

- Radial misalignment, where the shafts are parallel although not lying on a common centre line.
- Axial misalignment, end float, where the shaft centre lines are in alignment although the axial position is incorrect and axial movement may be possible.
- Angular misalignment, where the centre lines of the respective shafts are not parallel.

The deviations can occur singly or in combinations. Also the individual deviations can change with operating conditions.

A typical changing condition is from cold to running temperature conditions. Thermal growth causes machine centre heights to increase slightly as they warm up. API 610 process pumps, are centre-line mounted to avoid thermal growth of the pump casing affecting the pipework. However, the motor driving the centre-line mounted pump is foot mounted and does have thermal growth. In this situation, motors are mounted low so that the thermal growth will expand the motor to near perfect alignment.

In large machines changes in ambient temperature or sunshine can affect the alignment. The thermal growth phenomenon can be further complicated when the drive and non-drive ends of a machine expand at differing rates. Not only does the radial alignment change, but also the angular alignment. Accurate on-line measurement is necessary to check for this condition.

Suppliers of couplings provide information relating to the maximum permissible deviations, usually stated for each individual

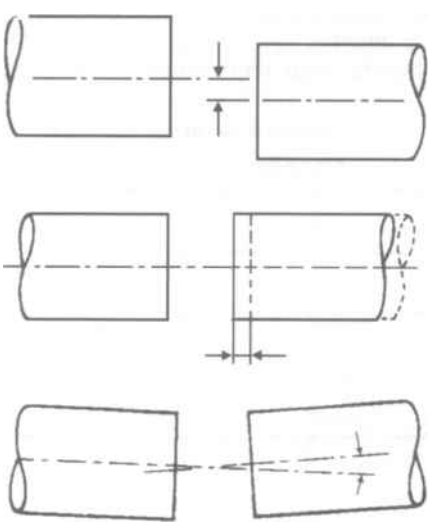

Figure 9.6 Types of misalignment

LIBERTY EXHIBIT 1034, Page 279
This book belongs to Robert Durham (rdurham@thewaylabs.com)
Copyright Elsevier 2024

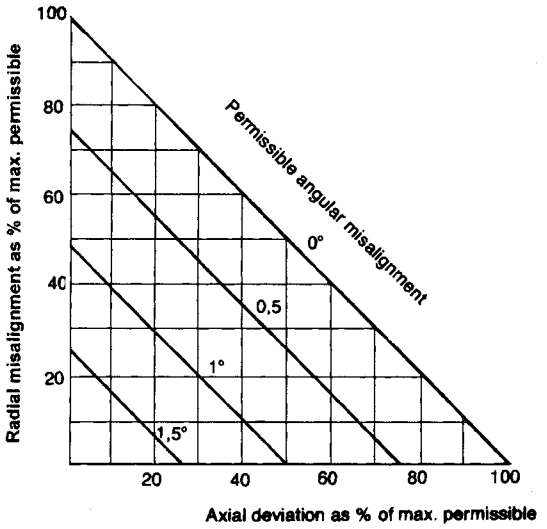

Figure 9.7 Permissible angular misalignment as function of axial deviation and radial misalignment

type of deviation. It is important to know the maximum permissible values of combined misalignment and how the maximum permitted deviations are influenced by speed and the torque transmitted. Figure 9.7 shows this for a particular size of double-diaphragm spacer coupling.

The service life of both couplings and machines, normally machine bearings, are influenced by misalignment. Just how much the life of the machine is affected can only be judged when information regarding the precise magnitude of the torque and forces transmitted due to misalignment is known. It is usual to refer only to the amount of misalignment permitted for a specific coupling type. But it is the amount of misalignment tolerated by the machine, Figure 9.8, which should really be investigated.

9.4 Forces and moments

A solid coupling is only designed and constructed to be subjected to torsional power transmission torques and axial forces. Flexible couplings can be subjected to bending moments as well as axial and radial forces. The solid coupling does not allow the shafts to move independently of each other. Torque and axial movement are transmitted directly from one shaft to the other. Diaphragm and gear couplings transmit torque directly but react differently to axial and radial movement. A diaphragm coupling allows the shafts to move both axially and radially, the diaphragms are deformed, and an axial force and a radial moment are generated.

The double gear coupling also allows axial and radial movement. No axial force is produced, but a radial load is produced rather than a moment. The torsionally-flexible coupling produces radial loads rather than moments. The rubber ring coupling will produce an axial force in response to axial movement, whereas the other couplings will slide to accommodate axial movement.

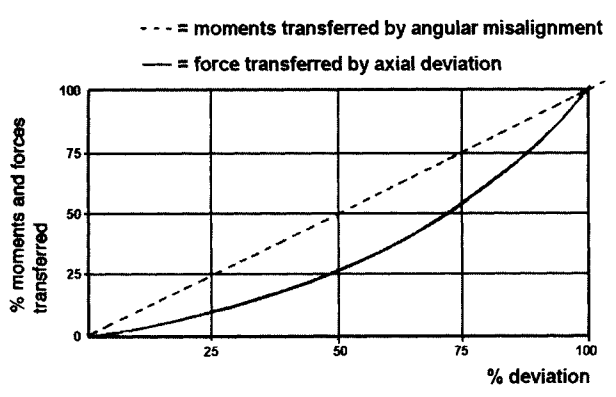

Figure 9.8 Relationship between misalignment and transmitted forces/ moments

9.5 Service factors

When determining the size of flexible and solid couplings, it is usual to evaluate a service factor or safety factor. This primarily takes account of the type of driving and driven machines, the mode of starting and duty cycle. Most coupling manufacturers publish nominal ratings for each coupling type and size together with lists of service factors for various duty conditions.

Drives with AC squirrel-cage motors and rotodynamic pumps generally have a service factor of 1.0. Arduous duty cycles, such as high pressure descaling, would increase the service factor to 1.25. If the pump driver was an engine, the service factor would increase between +0.5 and +1.0 depending upon the number of cylinders. Service factors for an AC motor driving a reciprocating pump can be as high as 3.0.

To compare different couplings objectively a new method has been developed which takes into consideration the frequency of starting, temperature, the moments of inertia of the driving and driven machine, normal torque and maximum torque.

This method has been presented in the German coupling Standard DIN 740, which, apart from the method of calculation, also contains dimensional standards. It is often used for pumps manufactured according to ISO 2858, BS 5257, and can form a basis for internal standardisation to simplify handling, storage, etc. There are, however, two additional service factors which should be considered.

The first is the effect that shaft misalignment can have on the coupling. A factor based on the extent of allowable misalignment expressed as a percentage of the maximum permissible deviation, should also be given.

The second factor should take into consideration the level of vibration of both machines, at least vibration velocities above 1.5 to 2 mm/s RMS. Note that for rotodynamic pumps, vibrations of up to 5 mm/sec RMS can be permissible, which is approximately equivalent to balancing degree Q16 according to VDI 2060 or quality class B for class IV machines according to BS 4675. The size of the various factors and their influence on coupling speed varies with different types, which is why the calculations and values given in DIN 740 must be used with a certain amount of caution and always with due regard to the suppliers' instructions, which must apply.

NOTE: A very important point in this context, to which too little consideration is given, is the magnitude of the starting torque in the case of direct-on-line starting of a squirrel-cage induction motor.

Measurements have shown that almost immediately after connection, approximately 0.04 s, a maximum torque is reach- ed which is between 6-10 times the rated torque and even higher in some cases. This is a result of the electrical sequence in the actual motor and the fact that connection of the three phases does not occur absolutely simultaneously. The actual maximum torque is therefore much greater than the starting torque quoted in motor catalogues.

An important factor for coupling calculations is the relationship between the moments of inertia of the driving and driven machine. This quotient determines the percentage of torsional moment which is to be used for the acceleration of the motor and pump rotors. When starting, the torque passing through the shaft coupling is:

$$M_k = M_t\left(1 - \frac{J_{mo}}{J_{ma} + J_{mo}}\right) = M_t\left(1 - \frac{t_o}{t}\right) \qquad \text{Equ. 9.1}$$

where:

LIBERTY EXHIBIT 1034, Page 280
This book belongs to Robert Durham (rdurham@thewaylabs.com)
Copyright Elsevier 2024

M_k = coupling torque at start (Nm)

M_i = internal motor torque (air-gap torque) at start (Nm)

J_{mo} = moment of inertia of motor (kgm^2)

J_{ma} = moment of inertia of driven machine (kgm^2)

t_o = motor starting time without load (s)

t = motor starting time with load (s)

The moment of inertia of a centrifugal pump can be given in relation to that of the motor; the following figures can be used as a guide:

2-pole motor J_{ma} = 0.04 to 0.2 J_{mo}

4-pole motor J_{ma} = 0.25 to 0.6 J_{mo}

6-pole motor J_{ma} = 0.60 to 3.2 J_{mo}

By inserting these figures in equation 9.1 and assuming that M_i is 6 to 10 times the rated torque, values for coupling torques at starting of up to 3.8 times the rated torque for 4-pole motors and 7.6 times for 6-pole motors are obtained. Therefore care must be taken when sizing couplings which are subjected to direct-on-line starting, especially when the driven machine has a large inertia.

9.6 Speed

Centrifugal forces increase with speed squared. The material of the coupling and the permissible peripheral velocities must be calculated. The maximum peripheral velocity for grey iron, for example, is 35 m/sec. To avoid vibrational damage it is necessary, for couplings which are not fully machined, to carry out both static and dynamic balancing at much lower speeds than those which are fully machined.

The mass of the coupling is often quite small in relation to the rotating masses in the driving and driven machines. For a pump unit the relationship of coupling/total rotor weight is approximately 0.02 to 0.08. It therefore follows that out-of-balance in the coupling normally has less effect on bearings and vibration than out-of-balance in the actual main components. However the actual position of the coupling relative to the bearings may change this.

The following relationship applies:

$$F = m \cdot e \cdot \omega^2 \cdot 10^{-3} \qquad \text{Equ 9.2}$$

where:

F = out-of-balance force (N)

m = out-of-balance mass (kg)

e = distance from centre of rotation to centre of gravity of out-of-balance mass (mm)

ω = angular velocity (rad/s)

For highly resilient rubber element couplings with a spacer, the out-of-balance can be further increased by whirling. It is also important that balancing is carried out using whole keys, half keys or without keys, depending upon the method of balancing the attached component.

9.6.1 Example

A fully-machined coupling can be assumed to have an inherent degree of balancing, without dynamic balancing, equivalent to VDI 2060 Ql6 to Q40, i.e. approximately 0.08 mm permissible centre line deviation at 3000 rev/min.

If the concentricity tolerance for the shaft bore in the hub is 0.05 mm, the maximum centre-line deviation can therefore be 0.13 mm. This is not abnormal. In many cases the tolerance alone reaches this value. This centre-line deviation generates an out-of-balance force of about 12 N per kg coupling weight at 3000 rev/min. A coupling for 50 kW can weigh 10 to 15 kg, which thus generates a rotational out-of-balance force of 120 to 180 N.

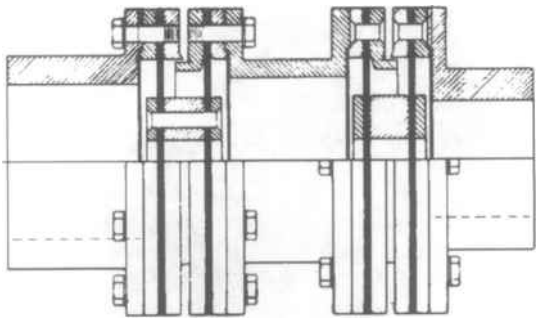

Figure 9.9 Non-sparking diaphragm coupling

Most couplings have no components which can move radially to create out-of-balance forces. The gear coupling is different. The teeth on the hubs and the spacer must have clearance at the top and bottom; this allows the spacer to move radially. In theory, the angle of the teeth flanks should provide a centralising force to counteract any tendency for the spacer to run eccentrically. Problems have been experienced with gear couplings and special attention should be paid to radial clearances and spacer weight.

The flexible spring coupling has a spring which in theory could move and run eccentrically. These couplings are usually used on positive displacement pumps at speeds which are low enough not to have balance problems.

9.7 Size and weight

The importance of small size and low weight to achieve as small a moment of inertia as possible, as well as reducing the out-of-balance forces, has been mentioned previously.

In certain extreme cases light-alloy metal spacers and diaphragms are used to reduce weight. Apart from the need to maintain a small size/transmitted torque ratio, it is also important, from the cost and standardisation point of view that the coupling should be able to accommodate large variations in shaft diameter.

9.8 Environment

Corrosive and abrasive environments affect the service life of the coupling by causing abnormal wear to the component elements. Extremes of heat and cold affect the strength and elasticity of the component materials. Oils, chemicals, sunlight and ozone can completely destroy a rubber element. A coupling made entirely of metal such as a diaphragm or flexible spring coupling, for example, is usually the only solution in such cases.

The process industries offer a very poor environment. In the petrochemical industry for instance, in refineries as well as oil and gas tankers, for example, it is necessary to use non-sparking couplings.

A non-sparking diaphragm coupling can be manufactured by making the diaphragm of monel and the remaining components of carbon steel or bronze. See Figure 9.9. Non-sparking types are usually used in conjunction with flameproof electric motors in environments where there is risk of explosion, either continuously or normally during operation. Statutory regulations must be observed, see Section 9.2.8.

A flexible spring coupling has the important elements housed in a seal cover and coated with lubricant, in the form of grease. Environmental changes have little effect on the coupling. Instances of spring breakage are rare, but any parts which could create a spark are fully enclosed, see Figure 9.10.

LIBERTY EXHIBIT 1034, Page 281
This book belongs to Robert Durham (rdurham@thewaylabs.com)
Copyright Elsevier 2024

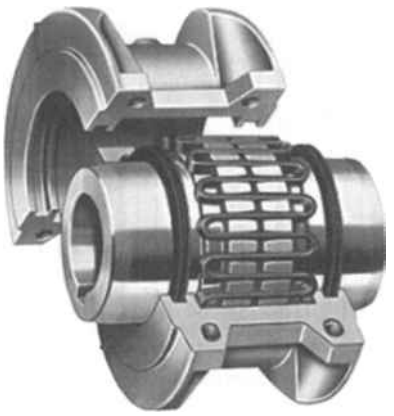

Figure 9.10 Flexible spring coupling

Thread diameter mm								Shaft journal diameter
d_1	d_2	d_3	d_4	t_1 +2 0	t_2 min	t_3	t_4	d_6
M3	2.5	3.2	5.3	9	13	2.6	1.8	7-10
M4	3.3	4.3	6.7	10	14	3.2	2.1	11-13
M5	4.2	5.3	8.1	12.5	17	4	2.4	14-16
M6	5	6.4	9.6	16	21	5	2.8	17-21
M8	6.8	8.4	12.2	19	25	6	3.3	22-24
M10	8.5	10.5	14.9	22	30	7.5	3.8	25-30
M12	10.2	13	18.1	28	37.5	9.5	4.4	31-38
M16	14	17	23	36	45	12	5.2	39-50
M20	17.5	21	28.4	42	53	15	6.4	51-85
M24	21	25	34.2	50	63	18	8	86-130

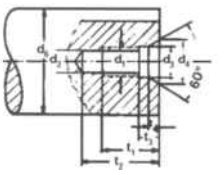

Figure 9.11 Tapped assembly hole in electric motor shaft

Another method of overcoming explosion risks, especially on board ship and with engine drivers, is by means of gas-tight bulkheads and bulkhead fittings consisting of two mechanical seals with barrier fluid between them, together with bellows which absorb misalignments. This type of fitting must be equipped with non-sparking shaft couplings.

9.9 Installation and disassembly

To maintain maximum operational reliability and to simplify assembly and service it is important that the machines connected are securely mounted, preferably on a common foundation and baseplate. Guards must be fitted to rotating parts according to safety requirements, see Section 9.13.

9.9.1 Alignment

Alignment of couplings or, more correctly, alignment of the shafts which the coupling is to connect, should be carried out as accurately as possible. For pumps packaged on baseplates with their driver and other equipment, provisional alignment should be achieved by "chocking" the baseplate during levelling. After grouting, the alignment should be set correctly by adjusting the shims. A perfect alignment should be considered as an economic possibility, since alignment can considerably affect both service life and maintenance costs. See Section 9.11 for methods of shaft alignment.

9.9.2 Baseplates

It is normal practice to bolt the pump directly to the baseplate. Other drive train equipment is shimmed to achieve correct alignment. In the case of cardan shafts the angular deviation should be equally distributed between the two joints to avoid unequal rotational velocities. Furthermore, a universal coupling should always rotate with a slight amount of angular misalignment to promote lubrication.

9.9.3 Attachment

The attachment of a coupling half to a shaft usually presents a dilemma. The hub should be securely attached and preferably absorb part of the torque, to reduce the load on the key, as well as being easy to detach. The practice of hub attachment is similar to that for motor shafts where the fit is usually H7/k6, light push fit up to 48 mm diameter. A push fit H7/m6 is preferred for diameters above 55 mm. Some pump manufacturers prefer a positive interference fit, typically 0.001 mm per mm of shaft diameter. These couplings are heated for mounting and dismounting. Large couplings become unwieldy. Oil injection on shallow taper shafts, without keys, can be very successful.

The tighter fit is brought about by the fact that the height of the key is reduced from 12.5% of the diameter at 24 mm diameter to only 6% at 100 mm shaft diameter. This reduction should also be compensated for by increasing the length of the hub. In the case of electric motors the key does not normally extend right to the end of the shaft, which also increases the strain on the key. This must also be compensated for by increased hub length.

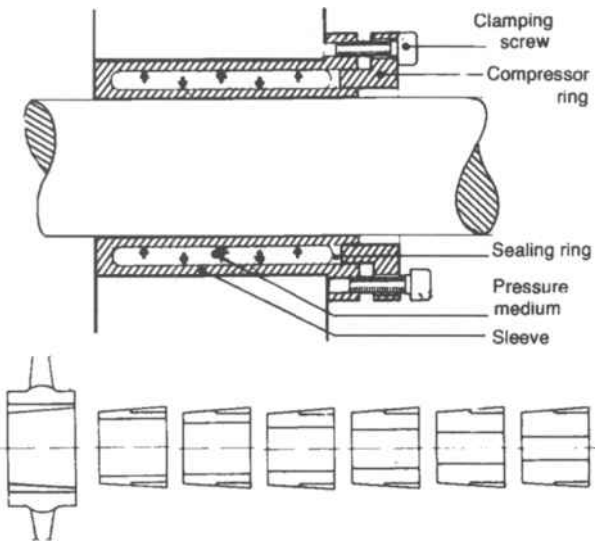

Figure 9.12 Examples of clamping sleeves

Assembly and disassembly of the coupling halves must be carried out carefully to avoid damage to the shaft ends and bearings. This operation could be simplified considerably if motor, pump and coupling suppliers fitted their equipment with suitable lugs, etc., to assist the attachment of pullers. For electric motors a tapped hole in the end of the shaft, as shown in Figure 9.11 can be supplied at extra cost, and ought to be standardised on all equipment.

Other methods of attaching the coupling halves are shrink fits, bolted joints or some form of clamping sleeve, Figure 9.12. Taper bushes are used primarily for chain wheels and pulleys, but can be a useful alternative for couplings where space permits. Some manufacturers offer taper bushes as an alternative to parallel bores. The hydraulically loaded clamping sleeve shown is a relatively new innovation and is not used extensively in pumps.

The resilient elements in the shaft coupling must be easy to purchase, replace or repair. That it must be possible to replace without disturbing the machines or coupling hubs, goes without saying.

9.10 Service life

The life of the coupling is influenced by many factors, which vary according to the style of construction. One which above all

LIBERTY EXHIBIT 1034, Page 282
This book belongs to Robert Durham (rdurham@thewaylabs.com)
Copyright Elsevier 2024

Method	Shaft coupling type	Measuring device and location	Zero setting and notation rules**	Parallel misalignment mm	Inclination* mm per 100 mm measured length	Remarks
I	Short shaft coupling Machined outer diameter Machined on insides	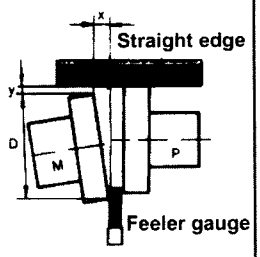	Misalignment according to the figure is positive i.e. the difference is measured above on the motor side	Measured directly as dimension y	$L = \frac{100 \cdot x}{D}$	Make due allowance for bearing end float in the machines
II	Short shaft coupling Requires at least a good surface at measuring pointer Machined on insides	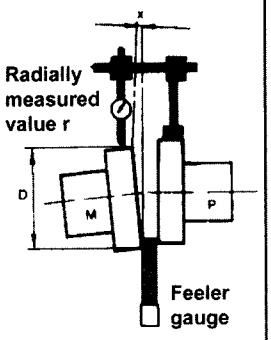	For vertical location zero set the dial above Measured value is read after rotating one half turn	$y = \frac{r}{2}$	$L = \frac{100 \cdot x}{D}$	Make due allowance for bearing end float in the machines (Zero set the dial indicator underneath if the pointer is resting on the pump half)
III	Short shaft coupling Good surfaces at the measuring pointers	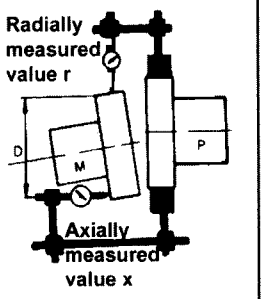	For vertical location zero set both dial indicators in the position shown i.e. for radial deviation above and axial deviation underneath The dials are read after rotating one half turn	$y = \frac{r}{2}$	$L = \frac{100 \cdot x}{D}$	Make due allowance for bearing end float in the machines If both dial gauges are placed with their pointers on the pump half, then zerosetting should be carried out from underneath
IV	Long shaft couplings, i.e. couplings with a distance between the coupling halves Good surfaces at the measuring pointers	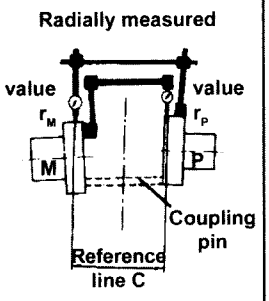	Zero set both dial gauges from above The measurements r_M and r_P are read after rotating one half turn	$y = \frac{r_M - r_P}{4}$***	$L = \frac{r_M + r_P}{2 \cdot C} \cdot 100$	N.B. Measurement can also be carried out on "smooth" shaft ends.
V	Long shaft couplings, i.e. couplings with distance between the coupling halves Good surfaces at the measuring pointers	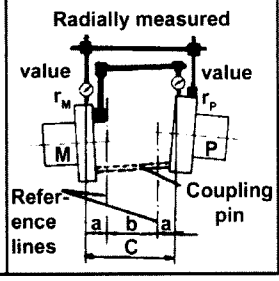	Zero set both dial gauges from above The measurements r_M and r_P are read after rotating one half turn	$y_M = \frac{r_M}{2}$*** $y_P = \frac{r_P}{2}$	$L = \frac{r_M + r_P}{2 \cdot C} \cdot 100$	Similar to method IV Notice the position of the reference lines for calculating angular misalignment

* Angular misalignment in degrees = $\frac{180}{p} \cdot \frac{L}{100} = 0.57L$, ** Dial gauge readings are reckoned to be positive when the pointer moves clockwise,

*** Parallel misalignment refers to a reference line as show in the figure

Figure 9.13 Shaft alignment measuring methods

LIBERTY EXHIBIT 1034, Page 283
This book belongs to Robert Durham (rdurham@thewaylabs.com)
Copyright Elsevier 2024

affects couplings with rubber elements, is the surrounding environment. The service life of a gear coupling is largely dependent upon regular lubrication using the correct type of lubricant according to the ambient temperature, etc. Flexible spring couplings are available with special grease which lasts five years, require almost no routine maintenance, and have no effects on the environment. Alignment affects the service life of all couplings irrespective of type or manufacturer.

For certain types of installations it can be desirable to use a coupling that allows a certain amount of emergency drive even in the event of failure of the flexible element. For other installations it may be necessary to use a limited torque coupling with overload protection.

It is important to carry out regular service and alignment checks according to the manufacturer's instructions, and equally important that these instructions are placed in the hands of the personnel concerned. Unfortunately methods or regulations for assessing the degree of wear are often lacking.

9.11 Shaft alignment

9.11.1 General

Flexible shaft couplings are normally used to transfer torque between rotating shafts where the shafts are not necessarily in perfect alignment. It should be noted that a flexible coupling is not an excuse for poor alignment. Careful alignment is important for the purpose of achieving maximum operational reliability whilst reducing service and maintenance.

When carrying out alignment, consideration must be given to relative movements of the respective machines due to thermal expansion and deformation caused by pipe forces/moments and setting of baseplates on foundations, etc. In certain cases, such as electric motors with plain bearings, notice must be taken of the electric motor's magnetic centre. Alignment should be carried out at various stages during installation.

When alignment is carried out at cold temperatures, it is necessary to make allowances to compensate for the thermal expansion caused by the difference in temperature to that of the normal operating temperature of a pump, pipeline and driver. When possible, a final check should be made at operating conditions after a few weeks in service. Alignment checks should then be carried out at regular intervals. Misalignment, apart from being caused by any of the previously mentioned loads and deformations, can depend upon worn bearings and loose holding down bolts. An increase in vibration levels can often be caused by a change in alignment.

Within the petrochemical industry and refineries, reports are frequently made with respect to alignment. The reports note the alignment prior to and after operation, before removing the pump or dismantling for repairs. The same procedure is carried out to check alignment of hot pumps after warm running.

Correct alignment can be achieved in many ways depending upon the type of equipment and degree of accuracy required. Information regarding alignment requirements is usually to be found in the pump manufacturer's instructions.

Never use the limiting values for the coupling as given by the coupling manufacturer since they greatly exceed the values for machines if smooth running and long service life are to be achieved.

As a guide, a final alignment check should not produce greater parallel misalignment than 0.05 to 0.1 mm or an angular misalignment exceeding 0.05 to 0.1 mm per 100 mm measured length. For the definition of misalignment see Section 9.11.2.

Alignment is adjusted by means of brass or stainless steel shims, usually placed beneath the machine supports. Baseplates are generally machined so that a minimum number of shims are always required under the motor. Horizontal adjustment is performed by moving the machine sideways on its mountings. Large machines must have horizontal jacking screws fitted. Sometimes the pump and driver are fixed after final adjustment by means of parallel or tapered dowels.

9.11.2 Alignment measurement

9.11.2.1 Reference line misalignment

In principle, alignment is based upon the determination of the position of two shafts at two points. Measurement or assessment can be made by straight edges, feeler gauges and dial indicators for the various radial and axial distances or run-out, see Figure 9.13. Adjustment is continued until these deviations are zero, or nearly zero.

Two shafts in a vertical plane, for example, can display two deviations from their common centre line, namely parallel misalignment and angular misalignment, see Figure 9.14. The amount of misalignment at the flexible section of the coupling is that which is of interest. It is therefore appropriate to use a reference line which passes through the flexible section. Parallel and angular misalignments are then referred to this reference line, Figure 9.15.

In Figure 9.14 it is important to note that if the reference line were to be chosen at the intersection point of the two centre lines of the shafts, point A, then only angular misalignment would exist. From a practical point of view angular misalignment is best measured as an inclination expressed as mm per 100 mm measured length rather than as an angular measurement in degrees.

The position of the reference line depends upon the type of coupling and naturally should always be located in relation to the flexible section of the coupling. For couplings with spacers and one or two flexible elements the position of the reference line is shown in Figure 9.15. Unless otherwise stated by the coupling manufacturer the permitted misalignment is considered to be that which is measured from the reference line.

9.11.2.2 Alignment procedure

In the case of a horizontal unit, alignment is best carried out by first aligning in the vertical plane, followed by transverse alignment. For vertical units alignment is measured in two directions at 90° to each other. For a horizontal unit, alignment is carried out in the following steps:

1. Align the machines visually and check that the coupling is not crushed in any way.
2. Attach the measuring device(s) and check that the dial indicator(s) moves freely within the area to be measured.
3. Check possible distortion of the motor mounting or baseplate by tightening and loosening each, holding down bolt individually. Shim the motor feet if distortion is present.
4. Set the dial indicator(s) to zero in the position shown in Figure 9.13.
5. For methods II, III, and IV in Figure 9.13, rotate both shafts simultaneously through 180°, half revolution, thus eliminating the influence of run-out between shaft bores and the

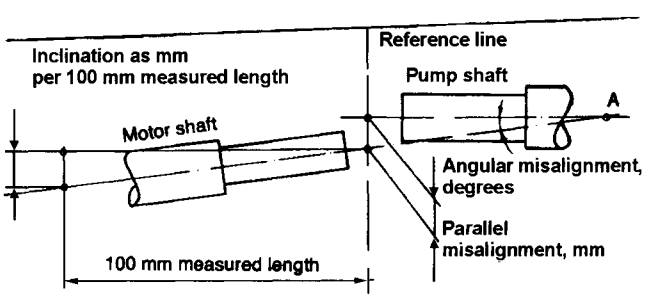

Figure 9.14 Misalignment of two shafts in a common plane

LIBERTY EXHIBIT 1034, Page 284
This book belongs to Robert Durham (rdurham@thewaylabs.com)
Copyright Elsevier 2024

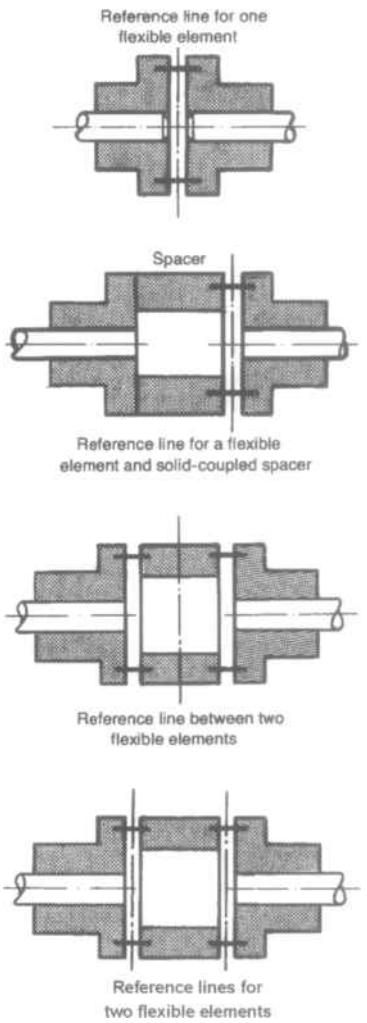

Figure 9.15 Location of reference lines for various types of coupling

outer diameter of a coupling half. The coupling halves need not then be cylindrical. Determine the measured values according to Figure 9.13. Note the measured values with plus or minus signs, see Figure 9.13 for notation. Determine parallel and angular misalignments.

6. Determine shim thickness according to Section 9.11.3 or 9.11.4 and adjust.
7. Carry out checks according to steps 4 and 5.
8. Carry out transverse alignment in the same manner as in the vertical plane.
9. Perform final alignment checks in both vertical and transverse directions and record for future reference remaining parallel or angular misalignments in both vertical and transverse directions. Also make note of operational conditions at the time of alignment, for example, cold motor with warm pump.

9.11.2.3 Choice of method

Figure 9.13 shows the five most common measuring methods. From the point of view of accuracy it is difficult to compensate for manufacturing tolerances between the two halves of the coupling by using a straight edge and feeler gauge, method I.

The difference in accuracy between method III and method IV is determined by the differences in the dimensions D and C respectively. Accuracy increases in both cases as each respective dimension increases, whereby method III is chosen if D is larger than C and method IV or V is chosen if C is larger than D. The choice of method is also determined, apart from accuracy, by the available measuring surface and by attachment facilities and space requirements of the measuring devices.

The difference between methods IV and V lies in the location of the reference lines. Method IV is universally applicable and suitable for smooth shafts or where it is sufficient to measure the total parallel misalignment and inclination. In the case of a coupling with two flexible elements, method V is suitable if the angular misalignment for each element is first calculated individually.

Optical methods are now available. Light sources and mirrors are attached to each coupling half. The units are connected to a small dedicated portable computer which, when supplied with information regarding the feet position, will calculate the respective feet adjustments. Similar optical devices can be attached to machine casings to detect differential expansion when warming up.

9.11.3 Determination of shim thickness

Using the measured parallel and angular misalignment, the necessary shim thickness can be calculated directly. The misalignment is expressed as positive or negative, + or -, according to Figure 9.16, which shows positive misalignment.

The shim thicknesses are calculated from the simple relationship:

$$U_1 = y + L \cdot \frac{F_1}{100} \qquad \text{Equ 9.3}$$

$$U_2 = y + L \cdot \frac{F_2}{100} \qquad \text{Equ 9.4}$$

where:

U_1	=	shim thickness at foot 1 (mm)
U_2	=	shim thickness at foot 2 (mm)
y	=	signed parallel misalignment (mm)
L	=	inclination expressed as mm per 100 mm measured length
F_1 & F_2	=	distance from coupling reference line to each respective foot (mm)

In Figure 9.16 the coupling reference line usually passes through the middle of the coupling.

9.11.3.1 Example

An indicator reading shows parallel misalignment y = +0.28 mm and inclination L = -0.06 mm/100 mm.

The distances to the feet are F_1 = 300 mm and F_2 = 500 mm.

The shim thicknesses required are:

$$U_1 = +0.28 - 0.06 \cdot \frac{300}{100} = 0.28 - 0.18 = 0.10\text{mm}$$

$$U_2 = +0.28 - 0.06 \cdot \frac{500}{100} = 0.28 - 0.30 = 0.02\text{mm}$$

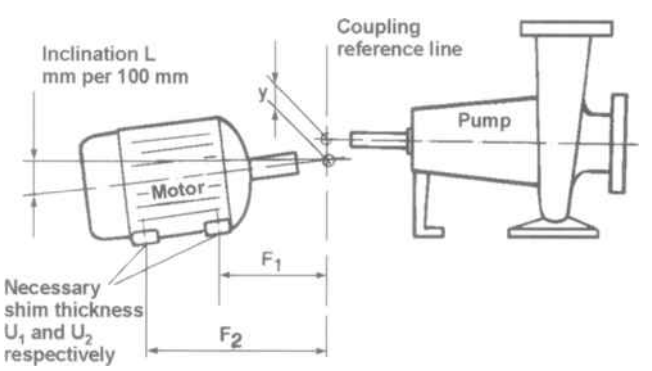

Figure 9.16 Positive misalignments y and L

LIBERTY EXHIBIT 1034, Page 285
This book belongs to Robert Durham (rdurham@thewaylabs.com)
Copyright Elsevier 2024

Shims of thickness 0.1 mm are placed under foot 1. The calculated value of U_2 = -0.02 mm means that 0.02 mm should be removed from foot 2, but can probably be accepted as permissible misalignment.

Equations 9.3 and 9.4 can also be combined so that parallel and angular misalignments can be determined in cases where it is not possible to fit the calculated shim thickness. In which case:

$$y = \frac{U_1 + U_2}{2} \qquad \text{Equ 9.5}$$

$$L = \frac{U_2 - U_1}{\frac{F_2}{100} - \frac{F_1}{100}} \qquad \text{Equ 9.6}$$

where: y and L are residual misalignments

U_1 and U_2 respectively (with sign notation) are shim thickness deviations.

For the previous example, when the proposed correction has been carried out, the residual misalignment is:

$$y = \frac{0 - 0.02}{2} = -0.01 \text{ mm}$$

$$L = \frac{-0.02 - 0}{\frac{500}{100} - \frac{300}{100}} = -0.01 \text{ mm/100 mm}$$

9.11.4 Graphical determination shim thickness

The required shim thickness can also be determined graphically by drawing the position of the shaft in respect of the measured values using a greatly enlarged vertical scale, 100:1 for example, and a reduced horizontal scale, 1:5 or 1:10 for example.

The method is illustrated by the following example carried out according to measuring method IV or V in Figure 9.13 with the various stages:

1. Fit the measuring device according to method IV or V and take readings r_P and r_M on the dial gauge.

Example:

dial reading at pump half gives r_P = -1.40 mm

dial reading at motor half gives r_M = +1.20 mm

2. Determine the dimensions C, F_1 and F_2. Note that the reference line in this example has been chosen to pass through the measuring pointer as shown in Figure 9.17

Example:

Measured results

C = 180 mm

F_1 = 470 mm

F_2 = 890 mm

3. Draw up a diagram on squared paper as shown in Figure 9.19. Mark in the dimensions C, F_1 and F_2 on the horizontal scale.
4. Mark half the measured value at the pump half, 0.5 r_P, on the vertical axis furthest to the right. The positive sign for r_P means that the motor shaft lies above the pump shaft and is marked upwards, whilst a minus sign is marked downwards. The reading r_P = -1.4 mm should thus be marked as -0.7 mm, i.e. downwards.
5. Mark half the measured value at the motor half, 0.5 r_M, at distance C. The reading's positive value means that the motor shaft lies below the pump shaft and should be marked as a minus value and vice versa for negative readings. The reading r_M = + 1.2 mm should thus be marked as -0.6 mm, i.e. downwards.

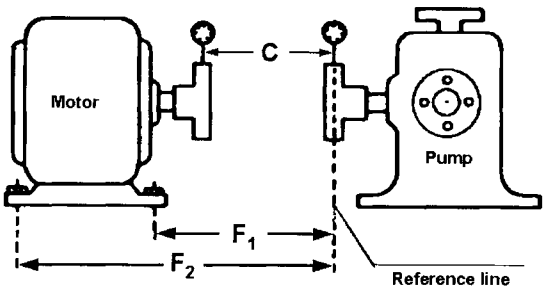

Figure 9.17 Length measurements and location of reference line

6. Join both points and extend the line to the motor feet locations F_1 and F_2 respectively. The motor shaft shown in the example lies 0.44 and 0.21 mm too low at the respective foot locations and should be raised by shims of corresponding thickness, after which transverse alignment is carried out in the same manner.
7. The alignment can be checked simply by using the two measured values and r_M and the distance "b" between the two flexible elements. In the case of couplings with two flexible elements, only the total angular misalignment of each element should be calculated. Parallel misalignments are experienced as angular misalignments by the coupling.

To calculate angular misalignment, the parallel misalignment at the flexible element must be calculated first, i.e. calculated at both reference lines. These misalignments are:

$$h_P = \frac{r_P}{2} - \frac{a \cdot L}{100} \qquad \text{Equ 9.7}$$

$$h_M = \frac{r_M}{2} - \frac{a \cdot L}{100} \qquad \text{Equ 9.8}$$

The angular misalignment in the vertical plane is then determined from the relationship:

$$\alpha_M = \frac{h_P}{b} \text{ (radians)} = 57.3 \cdot \frac{h_P}{b} \text{ (deg)} \qquad \text{Equ 9.9}$$

$$\alpha_P = \frac{h_M}{b} \text{ (radians)} = 57.3 \cdot \frac{h_M}{b} \text{ (deg)} \qquad \text{Equ 9.10}$$

The angular misalignments in the horizontal plane β_M and β_P are calculated in the same way.

Thereafter, the total angular misalignment, θ, per flexible element is calculated from the relationships:

$$\theta_M^2 = \alpha_M^2 + \beta_M^2 \qquad \text{Equ 9.11}$$

or

$$\theta_P^2 = \alpha_P^2 + \beta_P^2 \qquad \text{Equ 9.12}$$

9.11.5 Optical alignment

Recent advances in micro-electronics and laser technology have allowed optical alignment techniques to become portable and cost effective. A laser source is mounted on one shaft and a mirror is mounted on the other. The source module includes a detector which measures the position of the returned beam. The shafts are rotated incrementally through 90 ° and readings stored. A small control unit, sometimes small enough to be hand held, which is programmed with the drive geometry calculates the shim adjustment necessary to achieve good alignment. Figure 9.19 shows a typical set up for a small pump. Laser alignment can be used for shafts which are 10 m apart.

Similar equipment can be attached to pump casings, gearboxes, motor stators or baseplate pads to monitor movement or deflection under operating conditions.

LIBERTY EXHIBIT 1034, Page 286
This book belongs to Robert Durham (rdurham@thewaylabs.com)
Copyright Elsevier 2024

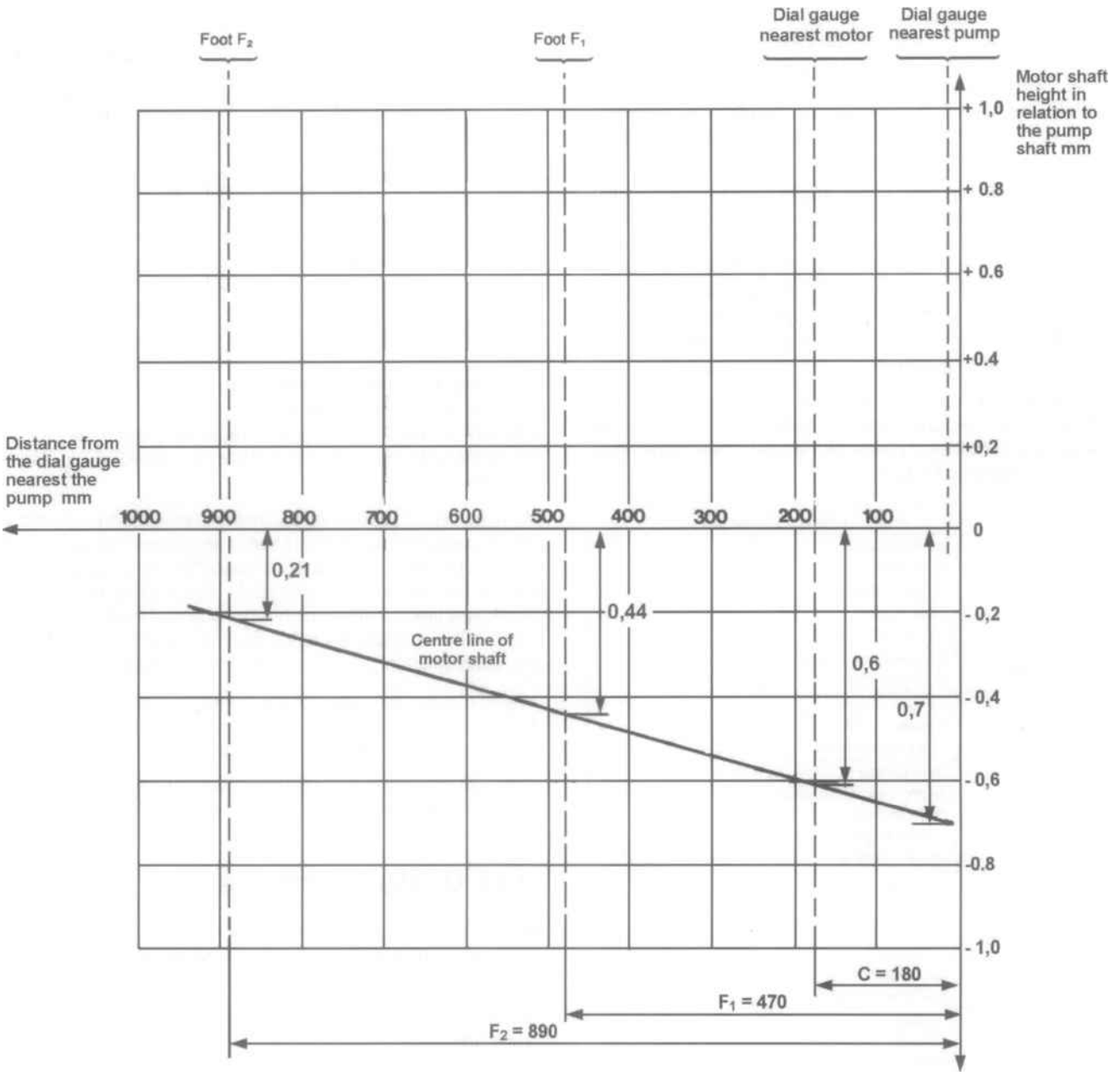

Figure 9.18 Diagram for the example in Section 9.11.4

9.12 Choice of coupling

9.12.1 Costs

In general the cost per kW of a coupling is only a fraction of that of a pump or motor. A pump usually costing at least 40 times that of a coupling and a 4 pole electric motor at least 20 times.

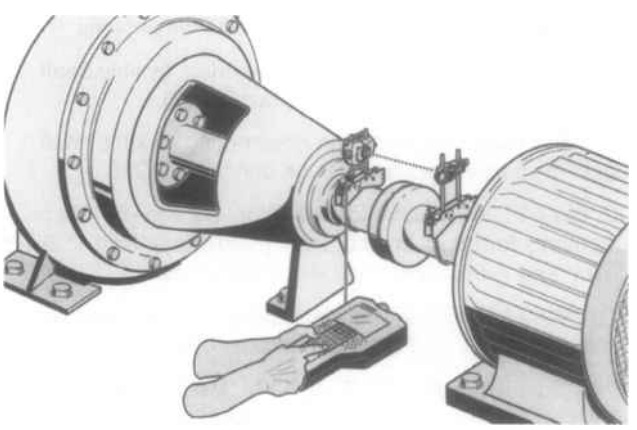

Figure 9.19 A typical laser alignment set up
Courtesy of Prüftechnik Alignment Systems GmbH

The cost varies according to the size and the type. The market for couplings is very competitive, the cost difference between manufacturers is usually small.

Gear couplings are the most costly. If a spray oil lubrication system is required this obviously increases the total cost considerably. Diaphragm and flexible spring couplings, together with the rubber buffer couplings, are about the same cost. Some of the rubber ring couplings are surprisingly expensive.

A good way to compare the cost of couplings is to set the price in relation to the torque and range of shaft end sizes to which the coupling can be fitted. The same pump shaft can, for example, be used for a torque range of 1:20 which occasionally means that the shaft end dimension and not the torque is used when selecting the size of a coupling.

Furthermore, the motor shaft is often larger than the corresponding pump shaft. The motor shaft is dimensioned for bending stress to a greater degree than the pump shaft; for example a motor is often used for belt drive. This can also mean using a larger size coupling.

LIBERTY EXHIBIT 1034, Page 287
This book belongs to Robert Durham (rdurham@thewaylabs.com)
Copyright Elsevier 2024

9.12.2 Factors influencing choice

It is important, not least of all from an initial cost point of view but also cost and space required for spare parts, to establish a viable internal standard by which a small number of type or style variations can cover the majority of coupling requirements within a company or plant. The factors reviewed in the checklist, Table 9.1 should be considered.

For most centrifugal pumps, the diaphragm spacer coupling has become the standard. These couplings are very reliable and can easily cope with the loads and speeds encountered in most situations. For higher speed applications, e.g. pumps driven by gas turbines, the gear coupling is preferred by some users. Positive displacement pumps operate better with a torsionally flexible coupling; flexible spring and couplings with rubber cushioning are favourites.

Users who have a large number of pumps usually choose a single coupling manufacturer whenever possible. This philosophy increases the purchasing power of the user while reducing inventory requirements for spares.

Factor	Influencing parameters
Type of coupling	Non-disengaging Disengaging Torque limitations Torsionally rigid Torsionally flexible
Type of movement	Radial and axial deviation Angular deviation
Forces and moments	Torsional moment Bending moment Axial and radial forces
Operational factors	Starts per hour Electricity supply frequency Operating time Ambient temperature Moment of inertia
Speed	Balancing Strength Burst protection (safety flange)
Size, weight	Shaft bore Space requirements Spacer for disassembly
Environment	Corrosive Abrasive Temperature Hazardous (non-sparking required)
Installation and disassembly	Horizontal and vertical shafts Alignment Fit
Others	Attachment facilities etc. for alignment measuring device Replaceable wear elements Service life Routine maintenance Internal standard Costs Coupling safeguards

Table 9.1 Factors to be considered in shaft coupling selection

9.13 Machinery guards

The pump manufacturer is normally responsible for machinery guards. In the case of standard pumps, a distributor may package the pump with its driver and other equipment and it would become the distributor's responsibility to supply and fit guards.

Standard guards are generally made of painted steel. Sometimes is used because it is easier to bend and may not need painting. When pumps are to be installed in a potentially hazardous environment special motors are used to reduce the chances of the motor igniting any gas present. A steel coupling rubbing on a steel guard could cause a spark and is not appropriate. Onshore, in these situations, an aluminium or bronze guard would be fitted. Offshore pumps in potentially hazardous atmospheres have bronze guards; the salt laden atmosphere offshore is not compatible with most aluminium alloys. Aluminium and bronze guards would be described as "non-sparking" guards.

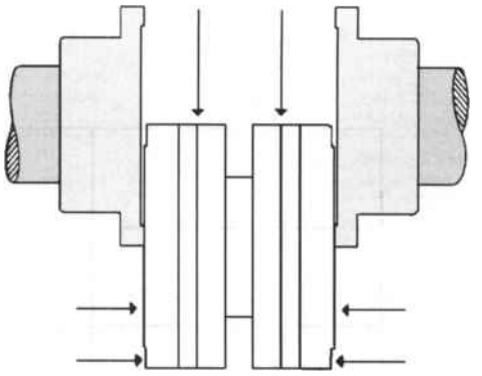

Figure 9.20 Burst-proof diaphragm coupling with spigotted spacer

With high speed couplings the distinction between high and low speed is subjective. There is a remote chance that the coupling may fail physically and explode due to the centrifugal force acting on the pieces. It is generally thought that bolting is the weakness link and may be sheared due to an unforeseen overload. If the coupling is not "burst-proof", see Figure 9.20, then the guard must be capable of retaining any scattered material.

Within Europe, the safety of machinery in general is covered by EN ISO 12100 : 2003. The safety of pumps is covered by EN 809. Guards are specifically regulated by EN 953.

Other interesting safety standards worth reviewing include BS PD 5304, DIN 31001, ASME B15.1 and OHSA coupling guard requirements.

9.14 Useful references

BS 3092:1973 Specification for main friction clutches, main power-take-off assemblies and associated attachments for internal combustion engines.

BS 3170:1972 Specification for flexible couplings for power transmission.

API 610 Centrifugal Pumps for General Refinery Services.

ANSI/API 671 Special-Purpose Couplings for Petroleum, Chemical, and Gas Industry Services, 3rd Edition1998, American Petroleum Institute.

NF EN 22858 End-suction centrifugal pumps (rating 16 bar). Designation, nominal duty point and dimensions, June 1993, Association Francaise de Normalisation.

ISO 2858:1975 End-suction centrifugal pumps (rating 16 bar). Designation, nominal duty point and dimensions.

DIN 740-1 Power transmission engineering; flexible shaft couplings; technical delivery conditions, 1986.

DIN 740-2 Power transmission engineering; flexible shaft couplings; parameters and design principles, 1986.

ISO 1940-1:2003 Mechanical vibration. Balance quality requirements for rotors in a constant (rigid) state, Part 1: Specification and verification of balance tolerances.

ISO 1940-2 Mechanical vibration. Balance quality requirements of rigid rotors. Part 2: Balance errors.

BS 4675:Part 1:1976, ISO 2372-1974 Mechanical vibration in rotating machinery. Basis for specifying evaluation standards for rotating machines with operating speeds from 10 to 200 revolutions per second.

LIBERTY EXHIBIT 1034, Page 288
This book belongs to Robert Durham (rdurham@thewaylabs.com)
Copyright Elsevier 2024

EN ISO 12100-1:2003 Safety of machinery. Basic concepts, general principles for design. Basic terminology, methodology.

EN 809 Pumps and pump units for liquids - Common safety requirements 1998.

EN 953: 1998, Safety of machinery - Guards - General requirements for the design and construction of fixed and movable guards.

BS PD 5304:2005 Guidance on safe use of machinery.

DIN 31001-1 Safety design of technical products; Safety devices; Concepts, safety distances for adults and children.

ASME-B15.1, 1992 Safety standard for power transmission apparatus.

OHSA 1910.219 - Mechanical power-transmission apparatus.

ISO 8821:1989 Mechanical vibration - Balancing - Shaft and fitment key convention.

ISO 11342:1998 Mechanical vibration - Methods and criteria for the mechanical balancing of flexible rotors.

BS 6861-2:1997 Mechanical vibration. Balance quality requirements of rigid rotors. Balance errors.

AGMA 515 Balance classification of flexible counplings, American Gear Manufacturers Association.

ISO 2491:1974 Thin parallel keys and their corresponding keyways (Dimensions in millimetres).

ISO 2492:1974 Thin taper keys with or without gib head and their corresponding keyways (Dimensions in millimetres).

ISO 3117:1977 Tangential keys and keyway.

ISO 3912:1977 Woodruff keys and keyways.

OHSA (Occupational Safety & Health Administration), 200 Constitution Avenue, NW, Washington, DC 20210 USA, www.osha.gov.

AGMA (American Gear Manufacturers Association), 500 Montgomery Street, Suite 350, Alexandria, VA 22314-1581 USA, Tel: 703 684 0211, Fax: 703 684 0242, www.agma.org

LIBERTY EXHIBIT 1034, Page 289

This book belongs to Robert Durham (rdurham@thewaylabs.com)

Copyright Elsevier 2024

This Page Intentionally Left Blank

LIBERTY EXHIBIT 1034, Page 290
This book belongs to Robert Durham (rdurham@thewaylabs.com)
Copyright Elsevier 2024

Drivers for pumps 10

10.1 Basic electrical theory and principles
10.1.1 Units
10.1.2 Systems
10.1.3 Power
10.1.3.1 Power factor
10.1.4 Phase compensation
10.1.5 Speed
10.1.6 Torque
10.1.7 Voltage
10.1.8 Starting
10.1.9 Efficiency
10.2 Regulations and standards
10.2.1 Controlling authorities
10.2.1.1 Specification compliance
10.2.2 Physical protection
10.2.3 Cooling categories
10.2.4 Mounting arrangements
10.2.5 Terminal markings and direction of rotation
10.2.6 Rated power, centre height and outline dimensions
10.2.7 Temperature classification
10.2.8 Potentially explosive atmospheres
10.2.9 Certification
10.3 Motor types
10.3.1 Constant speed AC motors
10.3.1.1 Synchronous motor
10.3.1.2 Squirrel-cage motors
10.3.1.3 Slipring motors
10.3.2 Variable speed AC motors
10.3.2.1 Pole-changing motors
10.3.2.2 Variable frequency motors
10.3.3 Variable speed DC motors
10.4 Motor starters
10.4.1 Protection
10.4.1.1 Short circuit protection
10.4.1.2 Overload protection
10.4.1.3 High temperature protection
10.4.1.4 Safety switch
10.4.1.5 Ammeter
10.4.2 Direct-on-line (DOL)
10.4.3 Star-Delta (Y-Δ)
10.4.4 Soft starts
10.4.5 Resistance
10.4.6 Reactor and transformer starters
10.5 Noise
10.6 Maintenance
10.7 Engines
10.8 Turbines
10.9 Power recovery turbines
10.10 Motor selection illustration
10.11 Useful references

LIBERTY EXHIBIT 1034, Page 291
This book belongs to Robert Durham (rdurham@thewaylabs.com)
Copyright Elsevier 2024

10.1 Basic electrical theory and principles

10.1.1 Units

Electric current is available in two distinct types; alternating current, AC, and direct current, DC. AC is the most popular because it is much easier to distribute and control. AC is the type of electricity that power stations generate and that is used every day in the home.

DC is the type of electricity produced by batteries. The electrical system in cars is usually 12 V DC, larger commercial vehicles are 24 V DC. Both AC and DC can be generated by rotating machines. Also, one can be converted to the other electronically.

The most common electrical units in use are given in Table 10.1.

Unit	Symbol	Designation
Current	I	Ampere (A)
Voltage	U	Volt (V)
Resistance	R	Ohm (Ω)
Active power	P	Watt (W) or kilowatt (kW) 1 kW = 1000 W 1 W = 1 J/s (see Energy)
Apparent power	S	Volt-ampere (VA) or kilo volt-ampere (kVA) 1 kVA = 1000 VA
Reactive power	Q	Volt-ampere reactive power (VAr) or (kVAr)
Power factor	cos φ	Dimensionless, cos φ = p/S
Energy		Joule (J) or wattsecond (Ws) Kilowatt hour (kWh) is usually used for convenience 1 kWh = 3,600,000 J

Table 10.1 Electrical units

10.1.2 Systems

Electric current is supplied to the consumer as either single phase or 3-phase AC with a frequency of 50 or 60 Hz, i.e. 50 or 60 oscillations per second. Single phase current is supplied to domestic consumers when the total load is less than 50 A. 3-phase current is supplied to all consumers when the load is higher. The supply frequency of 50 Hz is used throughout Europe but not worldwide. America uses 60 Hz, as do some Middle East countries. Some offshore oil platforms also use 60Hz supplies.

When describing the electric supply, a full description must be given, the following are typical of 24 V DC motor supplies:

110 V	1 ph	50 Hz
240 V	1 ph	50 Hz
380 V	3 ph	50 Hz
415 V	3 ph	50 Hz
660 V	3 ph	50 Hz
3.3 kV	3 ph	50 Hz
6.6 kV	3 ph	50 Hz

The 110 V supply described is used for site work where increased electrical safety is assured by using a centre tapped transformer; the maximum voltage to earth is 55 V.

When pump packages are supplied with instrumentation, the user specifies electrical supplies for various other functions. Control supplies may be 24 V DC or 110 V 1ph AC. For critical installations, emergency power supplies will be available to allow equipment to operate during power cuts. Emergency supplies can be AC or DC depending upon the source.

Drivers for pumps such as engine driven pumps may have electric auxiliaries and the engine may have electric starting. 24 V DC is the most popular.

When a user purchases a pump package with controls, the electric supplies for various functions will be specified as shown:

Electric motors, > 250 kW	3.3 kV 3 ph 50 Hz
Electric motors, ≤ 250 kW	380 V 3 ph 50 Hz
Motor heaters	220 V 1 ph 50 Hz
Controls	110 V 1 ph 50 Hz

AC electricity is generated as 3-phase in the power station. It is distributed at high voltage as a 3-phase supply. Before it arrives at the consumer its voltage is reduced to a suitable level. A small commercial consumer will have electricity delivered at 380 V or 415 V 3-phase. The consumer can then install equipment to produce a single phase supply.

Figure 10.1 schematically illustrates a 3-phase system. Between the system voltage U_s, also referred to as mains voltage, and the phase voltage, U_f, the following relationship applies:

$$U_f = \frac{U_s}{\sqrt{3}} \qquad \sqrt{3} = 1.732$$

The 3-phase supply shown in has the neutral grounded. This is the normal situation on land. Offshore electrical systems may not have the neutral grounded and the neutral must be conducted individually to each device. This type of supply is called "4 wire 3-phase" and must be included in any specification.

In a 3-phase supply with system or mains voltage of 415 V a suitable electric motor can be connected to all phase cables. The motor is designated as a 3-phase motor. Smaller electric motors and other loads, up to several kW, can be constructed for connection between a single phase cable and the system's neutral cable, a normal wall socket. These types of motors are designated as single-phase motors.

For the units given in Table 10.1 the following relationships apply:

For direct current DC

$$U = I \cdot R \qquad \text{Equ 10.1}$$

$$P = U \cdot I = I^2 \cdot R = \frac{U^2}{R} \qquad \text{Equ 10.2}$$

Direct current motors are used for variable speed pumps and emergency pumps, see Section 10.3.3 and 6.9.

For single phase AC current

$$U = \frac{I \cdot R}{\cos\varphi} \qquad \text{Equ 10.3}$$

$$P = U \cdot I \cdot \cos\varphi \qquad \text{Equ 10.4}$$

For 3-phase AC current

$$P = U \cdot I \cdot \sqrt{3} \cdot \cos\varphi \qquad \text{Equ 10.5}$$

If the required pump shaft power is P_p kW and the efficiency of the intended 3-phase motor is ηm, then the current required in amps is:

$$I = \frac{P_p \cdot 1000}{U \cdot \sqrt{3} \cdot \cos\varphi \cdot \eta m} \qquad \text{Equ. 10.6}$$

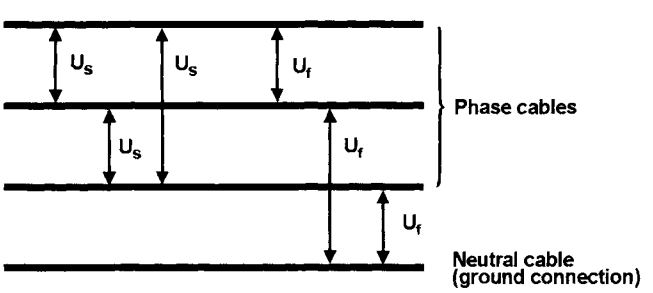

Figure 10.1 3-phase electric system

LIBERTY EXHIBIT 1034, Page 292
This book belongs to Robert Durham (rdurham@thewaylabs.com)
Copyright Elsevier 2024

See also example calculations in Section 10.7

10.1.3 Power

An electric motor for AC consumes not only active power, P, which is converted to mechanical work, but also a reactive power, Q, required to build up the necessary magnetic field in the motor. This reactive power does not perform any work and is not converted into heat but is nevertheless a load on the electricity supply. Electric power suppliers make a charge therefore for consumed reactive power if it exceeds a certain value.

10.1.3.1 Power factor

This relationship is illustrated in Figure 10.2. The active and reactive powers combine to form the apparent power, S. This trigonometrical relationship between P and S constitutes the power factor cos φ.

The power factor can be determined by measuring an electric motor's power input, current and voltage, at its rated power. The tolerances are:

$$\frac{1 - \cos\varphi}{6}$$

For electric motors the power factor usually lies between 0.7 and 0.9. It is lower for small motors, see Figure 10.3. The power factor is dependent upon the motor load the table in Figure 10.3 gives approximate values for 4 pole motors of various size at various loads.

The power required by the pump determines the power which the electric motor supplies. This means that if a pump at certain operating conditions requires 11 kW then the motor supplies this power irrespective of whether the rated motor power is 15 or 7.5 kW. This will result in overloading in the case of the 7.5 kW motor, which can cause damage to the motor winding due to overheating. Some form of motor protection device would therefore be necessary, whereby, after a certain period of time under overload conditions, the motor is automatically disconnected from the supply, causing the pump to stop, see Section 10.4.

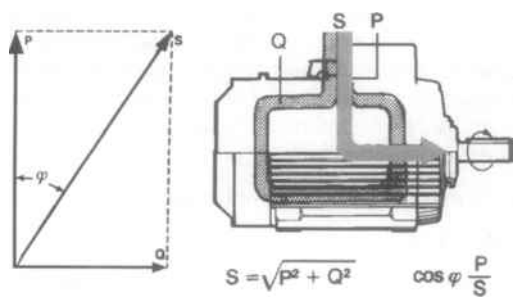

Figure 10.2 Power factor

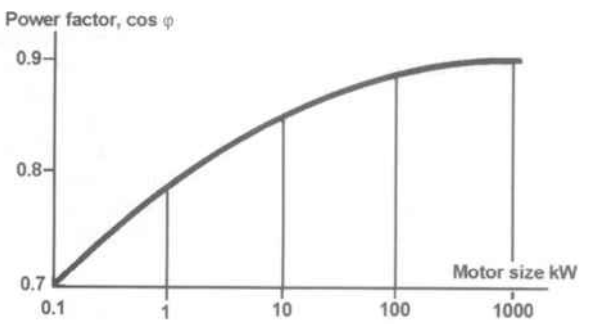

Motor size kW	Degree of loading (Shaft output)			
	¼	½	¾	1/1
< 0.75	0.5	0.6	0.68	0.75
0.75 - 7.5	0.55	0.65	0.73	0.8
7.5 - 75	0.6	0.7	0.78	0.85
> 75	0.65	0.75	0.83	0.90

Figure 10.3 Variation in power factor with motor size and load

A pump motor must, of course, be capable of providing the power which the pump requires. A small margin, depending upon the pump size, is added to the calculated power required to account for small discrepancies in the calculations and minor overload situations which may occur. The motor size may be controlled by starting requirements rather than running requirements. Too large a motor should not, however, be chosen. The procurement costs are unnecessarily high, the efficiency and power factors are lower, whilst the starting loads imposed on the supply are also unnecessarily high.

10.1.4 Phase compensation

If an installation contains many electric motors, large quantities of reactive power are consumed and the overall power factor is lowered. The problem can be aggravated by flow regulation systems such as load-unload when motors can be running at very low loads. A solution to this is to install capacitors, which generate reactive power and thereby increase the power factor. This procedure is usually called "phase compensation" or "power factor correction".

The capacitors can be applied to motors individually or to groups of motors. Extensive calculations must be performed for sizing phase compensation capacitors. The economics must be fully investigated to justify the extra initial investment. Modern systems include automatic compensation over a range of power factor values by switching various capacitors in and out of circuit.

Improvement of the installation's power factor results in a conservation of energy. It is carried out in order to:

- Avoid excess consumption of reactive power involving extra cost
- Reduce loads on transformers and electric cables
- Maintain voltage potential within the system

10.1.5 Motor speed

The speed of an AC electric motor is determined by the frequency of the supply and the number of poles in the motor stator according to the following relationship:

$$n = \frac{2 \cdot f \cdot 60}{p} \qquad \text{Equ 10.7}$$

where:

n = speed (r/min)

f = supply frequency (Hz)

p = number of stator poles

From equation 10.7 it can be seen that a change in frequency causes a change in speed. Electric motors can thus be speed regulated by means of varying the frequency, see Section 10.3.2.2.

In Europe the frequency is 50 Hz, therefore the speed of electric motors is 6000 divided by the number of poles. At least two poles are required which produces a maximum speed of 3000 r/min; 4 poles gives 1500; 6 gives 1000; 8 gives 750 r/min, etc. In the US and some Middle East countries as mentioned, the frequency is 60 Hz.

Electric motors which are constructed so that they exactly follow the stipulated frequency and number of poles are referred to as synchronous motors. For large sizes it is necessary, however, to have a special exciting winding, supplied with direct current, together with special starting equipment. This is not necessary for induction motors or squirrel-cage motors, which are characterised by the fact that there is a speed differential between the frequency of the electrical supply, rotating mag-

LIBERTY EXHIBIT 1034, Page 293
This book belongs to Robert Durham (rdurham@thewaylabs.com)
Copyright Elsevier 2024

netic field of the stator, and the motor speed.

An induction motor therefore has a 1 to 5% lower speed than a corresponding synchronous motor. This slip increases with increased motor loading and decreases with motor size. Because of its simple construction the induction motor is most popular for pump operation.

Most standard 3-phase squirrel-cage motors are designed to operate satisfactorily when the supply frequency is within -5% and +2% of the nominal frequency.

AC electric motors can be equipped to enable the number of poles to be varied in operation, thereby obtaining changes in speed. Such motors are called "pole-changing motors" and to a certain extent can be used for speed regulation of pumps, see Section 10.3.2.1.

In most AC motors the rotor is short-circuited and so has no connections with the stator winding or any external current supply. Such motors are called short-circuited or squirrel-cage motors. In order to limit the starting current and to regulate the speed a variable resistance can be connected to the rotor whereby the rotor must be equipped with sliprings. This type of motor is referred to as a slipring or wound-rotor motor. Usually once the motor is up to running speed the sliprings are shorted to produce a squirrel-cage motor.

The speed of a DC motor is a function of the motor design and the voltage applied. The DC motor stator does not have a rotating magnetic field which is dependent upon the supply frequency. The DC motor is somewhat similar to a slipring motor in that it has a wound rotor, an armature. But instead of sliprings, which supply current to all the windings all the time, the armature has a commutator which supplies current to some of the windings some of the time. The stator and armature need not necessarily be supplied at the same voltage. The motor speed is controlled by the armature voltage up to the full power design speed. Further speed increase is possible, at the expense of torque, by reducing the stator voltage, field weakening.

10.1.6 Torque

The torque of an electric motor is a measure of the motor's ability to rotate a shaft against resistance. The following relationship exists between torque, power and speed:

$$T = \frac{30000 \cdot P}{\pi \cdot n} \qquad \text{Equ 10.8}$$

where:

T = torque (Nm)

P = power (kW)

n = speed (r/min)

When starting an electric motor it is necessary to develop a greater torque than for the normal operating torque, so that the motor can accelerate to operating speed without overheating.

Figure 10.4 illustrates a typical 3-phase induction motor speed/torque curve. When starting "direct-on-line", the motor has a relatively high torque, usually 1.5 to 2 times the full load torque. As speed increases the torque first reduces, followed by an increase to maximum torque and finally rapidly reduces to the point at which the motor torque is equal to the load torque; equilibrium being reached at the designed duty point.

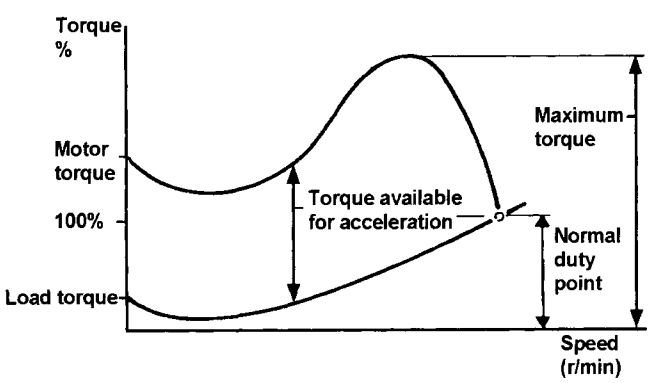

Figure 10.4 Induction motor speed/torque curve for direct-on-line starting

Electric motor catalogues usually state the starting torque in relation to the full load torque and full load current. They also assume full supply voltage, but this is not always a valid assumption.

Maximum torque is a measurement of the electric motor's momentary overload capacity. This is usually required to be at least 1.6 times the full load torque, although most electric motors have values which are considerably higher.

The various critical torques, relevant to specific motor designs, have special names:

- **Locked rotor torque** — The torque at the instant the current is applied before the rotor begins to rotate.
- **Pull-up torque** — The minimum torque the motor will supply during run up to full load speed
- **Pull-out torque** — The maximum torque the motor will supply during run up to full load speed.

Some motor designs have a pull-up torque which is less than the full load torque. Depending upon the pump type and the starting conditions of the pump, this design feature can be unacceptable.

Single phase motors produce no torque when starting and require an auxiliary winding to facilitate starting and to ensure rotation in the correct direction. The following categories of motors are supplied:

- Motors with a resistance starter winding, which is disconnected automatically after starting
- Motors with auxiliary winding in conjunction with a capacitor. For low starting torque requirements, the capacitor can be connected during operation, whilst for larger starting torque requirements the capacitor must be disconnected automatically after start-up. Other combinations are necessary to achieve optimum conditions for large starting torques and good maximum performance
- Motors with commutators, "universal current motors"

10.1.7 Voltage

Generally small 3-phase motors, with the exception of pole changing motors, can be used for 380 V and 220 V. The motor in this case is marked Y/Δ 380/220 V and, depending upon the method of connection, can be used for either voltage.

Normally 380 V or 415 V is used for 3-phase motors up to about 250 kW. For larger motors, up to approx 450 kW or installations with large motor loadings, higher voltage may be required for both technical and economical reasons. According to present international standards for standard voltage, IEC 60038, a system voltage of 660 V should be used. This voltage has the advantage that it enables squirrel-cage motors to be constructed for connection to either 660 or 380 V since $\sqrt{3} \cdot 380 = 660$, see Section 10.1.2.

In conjunction with the 1983 issue IEC 60038, 230/400 V has replaced 220/380 V as the international value for public low voltage networks. According to this standard, the system's nominal voltage should not have exceeded 230/400 V + 6% - 10%, i.e. the range between 244 V and 207 V, during the transitional period up to 2003.

As specified in DIN IEC 60038, this ensures that all equipment that is rated for 220/380 V can be further operated until the end of its service life without its safety being impaired. The above

LIBERTY EXHIBIT 1034, Page 294
This book belongs to Robert Durham (rdurham@thewaylabs.com)
Copyright Elsevier 2024

details also apply to the 380/660 V or 400/690 V system's nominal voltages.

In the case of larger motors local voltage drops are often achieved by using transformers. For motors connected to high voltage supplies of 11 kV or 22 kV, transformers are normally used for a nominal motor voltage of 3.3 or 6.6 kV. Motors larger than 1000 kW can be connected directly to 11 kV supplies.

The choice of motor voltage must be made from technical and economical considerations. The determination of voltage involves not only the motor but the complete electrical equipment such as cabling, transformer requirements, switchgear, etc. Generally it can be said that for larger motor loads it is advantageous to use a higher voltage than 380 V (415 V).

If the supply voltage reduces then the motor torque is also reduced, in theory. Standard low voltage motors are designed to operate correctly on the nominal voltage ± 6%. Low voltage producing reduced torque applies when starting as well as during normal operation. The torque reduces in proportion to the square of the voltage. It is therefore important to ensure that electric cables to the motor are suitably sized to avoid excessive voltage drop. The maximum acceptable figures usually being 10% when starting and 5% during normal operation. The voltage drop during starting is higher because of the increased current flowing, typically between 4 and 7 times full load current depending upon the starting method. To ensure that starting is not a problem, some user specifications require the motor to be able to start at 80% nominal supply voltage.

10.1.8 Starting

Electric motors need to start and stop. The type of equipment required is dependent up on the type of motor, the starting torque required and the capabilities of the supply system. 3-phase motors are manufactured in power ratings down to 0.06 kW, single phase motors are rarely used in sizes over 7.5 kW.

Motors are started by contactors, sometimes called circuit breakers. Under normal circumstances a contactor appears to be a switch. When the start button is pressed the motor starts. When the stop button is pressed the motor stops. The difference is seen when there is a power cut or an overload. When the power is restored after a power cut, motors which were running before do not start. When an overload occurs, the motor appears to switch itself off, after the overload condition has cleared the motor does not start again.

A contactor reacts this way because a normal switch could be very dangerous, allowing motors to start unexpectedly. When the start button is pressed, what actually happens depends upon the size and voltage of the motor. For small, low voltage motors the button may press the switch contacts together, making the circuit. Once the circuit is made, a small electric coil holds the contacts "in". On high voltage motors, pressing the start button energises a low voltage coil which closes the contacts, again a coil holds the contacts "in". Pressing the stop button breaks the circuit of the "hold-in" coil and the contacts open or come "out".

When a power cut occurs there is no power for the motor so it stops; there is also no power for the "hold-in" coil so the contacts open. If power is restored the contactor is in the off position; the motor cannot start. When an overload occurs the power supply to the "hold-in" coil is broken so the motor stops as if the stop button had been pressed.

Motor control is a little more complicated than this. 3-phase motors can be started by various methods, see Section 10.4. Single phase motors are started by a simple two-pole contactor. Single phase motors, other than commutator motors, have the complicated starting control performed automatically by a centrifugal switch inside the motor.

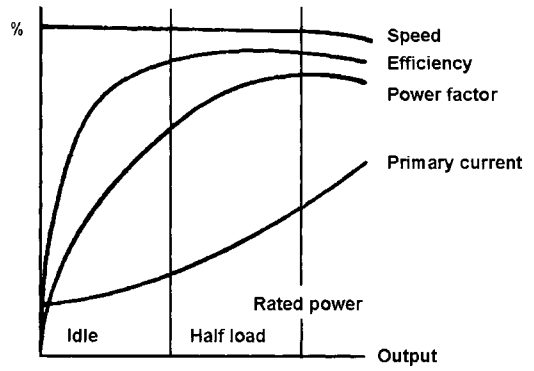

Figure 10.5 Variation in efficiency of electric motors with load

Controlling motors by electrically operated contactors has the advantage of allowing more than one motor to be started by the same signal. Also automatic control of motors becomes easy. The control system produces a simple low voltage digital signal which can open or close the contactors. Control systems can be constructed from separate relays and timers which are wired to perform the necessary logic functions. Alternatively, PLCs could be used. PLCs have digital outputs which can be rated at 110 V or 220 V to power the contactor hold-in coils.

Contactors can be extended to operate several circuits simultaneously. Not all circuits must close, and it is possible to open some while closing others. The motor contactor can generate digital logic signals for the control system as well as operating indicator lamps.

When considering starting motors, the regularity of starting must be evaluated. Small motors, 0.06 kW, can be rated for 2300 to 5000 starts per hour. Larger motors, 132 kW, are rated for only 30 starts per hour. When the pump duty cycle requires frequent motor starting, the motor manufacturer should be consulted with all available data. The type of starting method and the run up time, together with environmental conditions, are crucial.

DC motors are not usually used as fixed speed drives, see Section 10.3.3 about starting variable speed motors.

10.1.9 Efficiency

The efficiency of medium size electric motors, 10 to 100 kW, is usually 85 to 90% at full load. Better values can be obtained for larger motors, whilst 75 to 85% is usual for smaller motors. Losses in motors consist of bearing and friction losses together with electrical and magnetic losses in the windings. Some manufacturers produce energy efficient motors, which are 1.5 to 3% more efficient than their standard motors. Whether the increased efficiency can be cost effective is dependent upon local energy costs and the constancy of the application.

Figure 10.5 shows speed, efficiency, power factor and current consumption of an electric motor. It can be seen that efficiency varies with motor load.

10.2 Regulations and standards

10.2.1 Controlling authorities

The same regulations apply to the installation of electric motors as for other electrical installations and equipment.

Principal national standards authorities are listed in Table 10.2. A comprehensive list of countries and their national standards bodies who are members of ISO, International Standards Organisation are given in Section 10.11.

Country		National standards authority
Belgium	IBN BIN	Institut Belge de Normalisation Belgisch Instituut voor Normalisatie
Canada	SCC	Standard Councils of Canada

LIBERTY EXHIBIT 1034, Page 295
This book belongs to Robert Durham (rdurham@thewaylabs.com)
Copyright Elsevier 2024

Country		National standards authority
Denmark	DS	Dansk Standardiseringsrad
Finland	SFS	Suomen Standardisoimisliitto r.y.
France	AFNOR	Association Francaise de Normalisation
Germany	DIN VDE	Deutsches Institut für Normung Verband Deutscher Elektrotechniker
Greece	ELOT	Hellenic Organization for Standardization
Luxembourg	ITM	Inspection du Travail et des Mines
Ireland	NSAI	The National Standards Authority of Ireland
Italy	UNI	Ente Nazionale Italiano di Unificazione
Netherlands	NNI	Nederlands Normalisatie Instituut
Norway	NSF	Norges Standardiseringsforbund
Portugal	IPQ	Instituto Portugues da Qualidade
Spain	AENOR	Asociacion Espanola de Normalizacion y Certificacion
Sweden	SIS	Standardiseringskommissionen i Sverige
United Kingdom	BSI	BSI, British Standards
United States	ANSI	American National Standards Institute

Table 10.2 National Standards Authorities

The European Community has agreed to work together to establish European Standards. General standards are produced by CEN, European Committee for Standardisation. Electrical standards are issued by CENELEC, European Commission for Electrotechnical Standardization. CENELEC issues two types of standard. ENs, which are identical in principle to ENs issued by CEN; each member country must publish the EN and withdrawn any national standards which conflict.

CENELEC's other standards are HDs, Harmonising Documents. Each national standard body must publicise the existence of the HD but it does not constitute a standard which requires compliance. The member countries agree to drift towards HD compliance at a future date when it will become an EN.

Other major industrial countries have national electrical standards. Compliance with these may be necessary when pump packages are built for export.

International organisations have established standards for motors and other electrical equipment with the hope that eventually all electrical equipment will be interchangeable. This is perhaps an ideal which will never be realised. The more parties involved in negotiating standards the weaker the standard tends to become and the longer it takes to finalise. The International Electrotechnical Commission is the authoritative worldwide body responsible for developing consensus global standards in the electrotechnical field. IEC is dedicated to the harmonization and voluntary adoption of these standards, supporting the transfer of electrotechnology, assisting certification and promoting international trade.

There are 15 countries covered by CENELEC standards, IEC standards cover about 44 countries.

Area of design	BS	CEN/CENELEC	IEC / ISO
Balance, (residual vibration)	4999 Pt 142	≡ HD 347	≠ 34-14 ≡ ISO 2373 Gr N
Cooling arrangements	EN 60034-6	EN 60034 Pt 6	= 34-6
Dimensions	4999 Pt 141		≠ 72 & 72A
Hazardous area classification	5501 Pt 1		≠ 79-10
Insulation	2757		≡ 34-7
Mounting arrangements	EN 60034 Pt 7	EN 60034 Pt 7	≡ 85
Noise	4999 Pt 109	≡ HD 53.9	≠ 34-9
Performance	EN 60034-1 & -9	≡ HD 53.1	≡ 34-1
Physical protection	EN 60034 Pt 5	EN 60034 Pt 5	≠ 34-5 = 529
Starting	EN 60034-12	≡ HD 53.12	≠ 34-12
Temperature limitations	EN 50014 & 50018	EN 50014 & 50018	≠ 79-0 & 79-1
Terminals and rotation	4999 Pt 108	≡ HD 53.8	≠ 34-8
Thermal protection	EN 60730-2-2	EN 607302-2	≠ 730-2-2

Table 10.3 British, European and international motor design standards

The important areas of electrical equipment design which require standardization and regulation are shown in Table 10.3. The relationship between British, European and international standards are shown.

Equipment specifically for hazardous areas can be designed to reduce the attendant risks by using different philosophies. Table 10.4 indicates the relationship between standards. BS, EN and IEC/ISO have been rationalised.

Construction		BS	CEN/CENELEC	IEC / ISO
General requirements		EN 60079	EN 60079	IEC 60079
Oil immersed	"o"	EN 60079-6	EN 60079-6	IEC 60079-6
Pressurised	"p"	EN 60079-2	EN 60079-2	IEC 60079-2
Powder filled	"q"	EN 60079-2	EN 60079-2	IEC 60079-2
Flameproof	'D' "d"	EN 60079-1	EN 60079-1	IEC 60079-1
Increased safety	"e"	EN 60079-7	EN 60079-7	IEC 60079-7
Intrinsically safe	"i"	EN 60079-11	EN 60079-11	IEC 60079-11
Encapsulated	"m"	EN 60079-18	EN 60079-18	IEC 60079-18
Non-sparking	"N"	EN 60079-15	En 60079-15	IEC 60079-15

NOTE: "i" can also be "ia" and "ib", similarly "N" can be "n"

Table 10.4 Standards for hazardous area equipment

BS 4683 Part 2 and IEC 79-1 regulate the construction and testing of flameproof apparatus.

BS 5345, Code of practice for selection, installation and maintenance of electrical apparatus for use in potentially explosive atmospheres (other than mining applications or explosive processing and manufacture is worth reviewing. There is no alternative, or close equivalent in European standards. Parts 1 and 2 are similar to some standards, IEC 79-10 and IEC 79-14, but the remainder of 5345 is unique. Figure 10.6 indicates the acceptable types of construction which can be used in the various zones, see Section 10.2.8.

Commercial organisations also have standards which regulate motors in specific applications, take shipping for example. The following bodies have specific motor regulations for marine applications. Off-shore oil installations may be included.

Lloyd's Register

Germanischer Lloyd

Det Norske Veritas

Bureau Veritas

OCMA, Oil Companies Materials Association, has specifications relating to motor protection. EEMUA, Engineering Equipment and Materials Users Association and EEMAC, Electrical and Electronics Manufacturing Association of Canada, both have motor specifications.

NOTE: In Europe, it is important to remember the ATEX Regulations, **REGULATIONS** !! not specifications or standards, came into full effect on the 30th June 2006. These regulations will be implemented with some vigour after the recent serious accidents.

10.2.1.1 Specification compliance

In order to ensure motor manufacturers comply with all the relevant standards independent test houses have been established to validate specific motor designs. Test houses are mostly employed for equipment destined for hazardous areas, usually potentially explosive atmospheres. Motors are tested on load under laboratory controlled conditions to ensure that construction tolerances limit air gap sizes and that surface temperatures do not exceed prescribed values.

LIBERTY EXHIBIT 1034, Page 296
This book belongs to Robert Durham (rdurham@thewaylabs.com)
Copyright Elsevier 2024

Zone	Type of protection
0	Ex 'ia' Ex 's' (specifically certified for use in Zone 0)
1	Any type of protection suitable for Zone 0 and Ex 'd' Ex 'ib' Ex 'p' Ex 'e' Ex 's'
2	Any type of protection suitable for Zone 0 or 1 and Ex 'N' or 'n' Ex 'o' Ex 'q'

Figure 10.6 Electrical apparatus construction for various zones

Test houses are located in several countries and each issues their own certification. The areas of expertise are not identical, some test houses are preferred to others for certain equipment. The test houses listed in Table 10.5 are in alphabetical order and not in any order of superiority.

Country		Test house
Australia	NSW	New South Wales Mines Approval
Austria	TÜV-A	
Belgium	ISSEP	
Canada	CSA	Canadian Standards Association
	EMR	Energy, Mines and Resources Canada
Denmark	DEMKO	Dansk Elektrische Materialkontrol
France	INERIS	Institut National de l'Environment Industriel et des Risques
	ISSeP	Institut Scientifique de Service Public
	LCIE	Laboratoire Central des Industries Electriques
Germany	DMT-BVS	Bergbau-Versuchsstrecke Dortmund-Derne
	PTB	Physikalisch-Technischen Bundesanstalt
Italy	CESI	Centro Elettrotecnico Sperimentale Italiano
Netherlands	N.V. KEMA	Keuring van Electrotechnische Materialen
Norway	NEMKO	Det Norske Veritas
Spain	LOM	Laboratorio Oficial J M Madariaga
Sweden	SP	Swedish National Testing & Research Institute
United Kingdom	EECS	Electrical Equipment Certification Service, incorporating:
	BASEEFA	British Approvals Service for Electrical Equipment in Flammable Atmospheres
	MECS	Mining Equipment Certification Service
		SCS
		SIRA Certification Service
USA	UL	Underwriters Laboratory
	FM	Factory Mutual

Table 10.5 Test houses

10.2.2 Physical protection

IEC 60034 Part 5 classifies the types of enclosure for rotating electrical machines in respect of the degree of protection afforded to personnel against contact with live parts, and against ingress of solid foreign particles and liquids. The various types of classifications are designated by using the letters IP followed by two numbers. The same method is also applied in IEC 34-5 and IEC 529 but the design requirements are not identical. The table in Table 10.6 reviews the standard designations for various protection categories.

First digit		Second digit	
0	No protection	0	No protection
1	Protection against solids ≥ 50 mm	1	Protected against vertical drips
2	Protection against solids ≥ 12 mm	2	Protected against drips 15° from vertical
3	Protection against solids ≥ 2.5 mm	3	Protected against spray 60° from vertical
4	Protection against solids ≥ 1.0 mm	4	Protected against splashing water
5	Protection against dust	5	Protected against water jets
5	Protection against dust	6	Protected against heavy seas
5	Protection against dust	7	Protected against intermittent immersion
5	Protection against dust	8	Protected against continuous immersion

Table 10.6 Physical protection categories for electric motors

The dust used for testing is talc, 75 μm nominal size at a concentration of 2 kg/m^3. The test for intermittent immersion is conducted with water for 30 minutes. The minimum immersion depth is 150 mm for the top on the motor, the minimum immersion for the bottom of the motor is 1 m.

Motors which are weather-proofed are designated by the addition of the letter "W" between "IP" and the number.

In certain cases electric motors must be equipped with condensation drainage facilities, usually by drilling a 6 to 8 mm dia- meter hole at the lowest point. IP 22 used to be the standard for motor protection, most motors now are IP 44 minimum. Motors for offshore platforms are usually IP W 55. Motors for hot, humid atmospheres are often required to be "tropicalised"; this treatment has not be standardised.

European and international standards recognize the effect of vibration on personnel. Vibration from motors can be transmitted through support structures to the ground. To limit personnel discomfort, and ensure proper bearing life, European Standard HD 347 has been incorporated in BS 4999 Part 142. IEC 34-14 has identical requirements to ISO 2373 Grade N, which are similar to European requirements.

Noise continues to be an increasing problem. Motor noise is specified in HD 53.9 and BS 4999 Part 109. IEC 34-9 is similar.

10.2.3 Cooling categories

In IEC 34-6 the categories for air cooling are designated by means of the letters IC followed by two figures. The designations used in BS 4999: Part 21 utilises the same two figures but omits the letters IC. The first character refers to the type of cooling and the second to the method of circulation. The most common methods of cooling electric motors and their designations are shown in Table 10.7. The IEC Standard also contains a more detailed code for more complicated cooling systems. Standard air cooling designs are based on an ambient temperature of 40°C and an altitude of 1000 m maximum.

BSI Standard	IEC Standard	Cooling Category
0/1	IC01	Free circulation, self circulation
0/6	IC06	Free circulation, independent components mounted on machine
1/1	IC11	Inlet duct ventilated, self circulation
1/7	IC17	Inlet duct ventilated, independent and separate device or coolant system pressure
2/1	IC21	Outlet duct ventilated, self circulation
2/7	IC27	Outlet duct ventilated, independent and separate device or coolant system pressure
3/1	IC31	Inlet and outlet duct ventilated, self circulation
3/7	IC37	Inlet and outlet duct ventilated, independent and separate device or coolant system
4/1	IC41	Frame surface cooled, self circulation
5/1	IC51	Integral heat exchanger (using surrounding air), self circulation

Table 10.7 Motor air cooling categories

Motors for pumps in boreholes and similarly limited spaces usually have product lubricated bearings. Cooling is achieved by using the pumped product. The rotor chamber is filled with liquid and protected against freezing. The motor is connected to the pump by means of an intermediate section, which also

LIBERTY EXHIBIT 1034, Page 297
This book belongs to Robert Durham (rdurham@thewaylabs.com)
Copyright Elsevier 2024

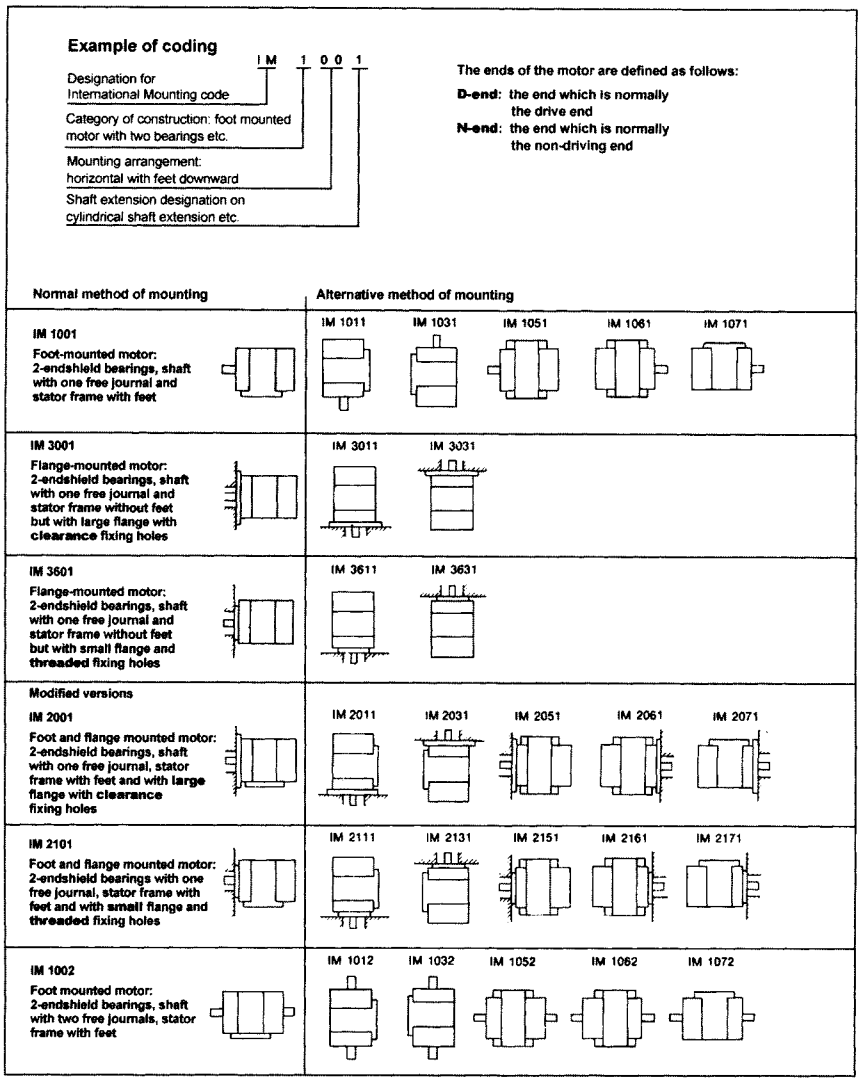

Figure 10.7 Mounting arrangements for electric motors

serves as the pump inlet. Because of the limited space both the pump and motor must be specially designed.

Motors for pumps immersed in larger vessels can be connected directly to the pump casing. Shaft sealing is by means of two mechanical seals in an oil bath. The motor is normally cooled by means of the pumped liquid, which is effective and requires less motor power than for an equivalent air-cooled motor. The motor should be fitted with temperature detectors, thermistors, for 120°C, integrated in the stator windings to protect against dry running. The detectors control a contactor which can be incorporated in the terminal box.

Typical cooling systems include:

- **Direct cooling** of the motor outer casing, which can be corrugated to increase the surface area, is used when the motor is permanently immersed in liquid which does not exceed 40°C
- **Casing cooling** using the pumped liquid. Part or all of the process liquid passes between the outer casing and the motor casing. The pump can be either "wet" or "dry", although dry-running is not permitted. At part flow cooling, the liquid must not contain solid particles. The temperature of the liquid must not exceed 40°C
- **Oil cooling**. Oil from the pump's oil case is circulated in the outer casing during operation
- Casing cooling using external liquid which passes between the outer casing and the motor casing. Temperature of the pumped liquid can normally be up to 70°C. This system is used in potentially explosive atmospheres. The motor should stop in the absence of positive pressure
- A "wet motor" consists of a 3-phase or single phase cage induction motor, hermetically attached to the pump casing. The pump impeller is connected directly to the motor shaft. The rotor and bearing in the motor are lubricated and cooled by the pumped liquid. This construction constitutes a leak-free pump suitable for transportation of hazardous liquids and for use in potentially explosive atmospheres
- In a wet motor the pumped liquid completely fills the motor casing. Both the stator and the rotor are immersed in the liquid. For wet rotor motors the stator winding is kept dry by means of a thin stainless steel shroud which separates the stator from the liquid. This type of construction is used for particularly troublesome media and also very small pumps, such as domestic central heating circulators. Wet motors and wet rotor motors are also used for submersible pumps
- Motor cooling can be monitored by embedding temperature detectors in the motor windings. Thermistors are normally used but resistance temperature detectors, RTDs, can be used at extra cost. One detector per phase is the minimum requirement; two per phase for critical applications. See BS 4999 Part 111, EN 60730-2-2, IEC 34-11 and IEC 730-2-2

10.2.4 Mounting arrangements

The design of electric motors with respect to bearings, shaft extension and methods of fixing is covered by BS 4999: Part 107, EN 60034 Part 7 and IEC 34-7. The motor construction allows for operation in all mounting positions, a motor which is normally intended for a particular mounting position is also shown

LIBERTY EXHIBIT 1034, Page 298
This book belongs to Robert Durham (rdurham@thewaylabs.com)
Copyright Elsevier 2024

in alternative positions. Figure 10.7 shows examples of various types of mounting arrangement of motors together with their international standard designations. For practical reasons larger manufacturers of electric motors often have their own methods of designation.

10.2.5 Terminal markings and direction of rotation

Terminal markings and direction of rotation are covered by BS 4999: Part 108 which is directly equivalent to CENELEC HD 53.8. IEC 34-8 is a similar specification. According to these standards the phases in a 3-phase motor should be designated by the letters U, V, W and the external earth or neutral connection designated by the letter N. The normal direction of rotation in electric motors is clockwise, viewed on the shaft drive end, for phase sequence U, V, W.

3-phase electric motors can be reversed by changing the connection positions of any two phases. This operation is easily carried out by a contactor. **Not all** motors are suitable for reverse operation but most standard motors are satisfactory. Motors, specifically designated as "quiet", are probably not suitable. One method of reducing motor noise is to fit a special cooling fan which is designed for one specific direction of rotation. Care must be exercised when reverse running is required.

Some pumps are not suitable for reverse running. Shaft driven oil pumps may not function causing bearing lubrication problems. Pumping rings in mechanical seals can be another problem. The direction of motor rotation must be checked during installation/commissioning. Start the motor when the coupling spacer is removed. Change two phases if necessary. Figure 10.8 shows fixing dimensions for flange-mounted motors with mounting arrangement IM 3001 and 3002.

Designation for main dimensions

- A = Distance between fixing hole centres (end view)
- B = Distance between fixing hole centres (side view)
- C = Distance from fixing hole centres at drive end of motor to shoulder of shaft
- D = Diameter of shaft extension
- E = Length of shaft extension from the shoulder
- H = Shaft centre height
- K = Diameter of holes in feet or mounting pads of machine

Dimensioning for foot mounted motors with mounting arrangement IM 1001 and 1002

- M = Pitch diameter of fixing holes
- N = Spigot diameter
- P = Outside diameter of flange
- S = Fixing hole diameter
- T = Depth of spigot

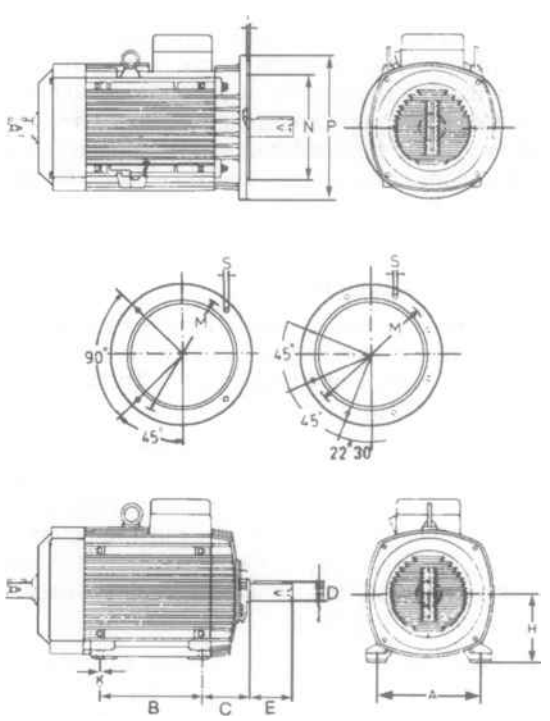

Figure 10.8 Standard dimensions for electric motors

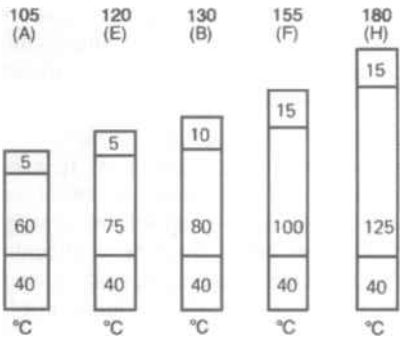

Figure 10.9 Temperature classification for insulating material

10.2.6 Rated power, centre height and outline dimensions

The IEC Standards 72 and 72 A contain recommendations concerning power, centre heights, foot mounting dimensions, shaft end dimensions and flange dimensions for electric motors. The preferred series of electric motor output (kW) are as follows; 0.37, 0.55, 0.75, 1.1, 1.5, 2.2, 3, 4, 5.5, 7.5, 11, 15, 18.5, 22, 30, 37, 45, 55, 75, 95, 110, 132. Ratings and performance within Europe are covered by HD 53.1 which has been incorporated in BS 4999 Part 101. Motor output is structured in HD 231.

According to the relevant electric motor standards, dimensioning should be carried out in the manner shown in Figure 10.8 using standardised dimensions. Interchangeability is then possible between different manufacturers providing the non-standardised dimensions are reasonably similar. It should be pointed out that this standardisation is not yet fully implemented, so that it is prudent to carry out checks when purchasing replacement motors.

For induction motors, which are the most common type of electric motor, there is a special standard, BS 4999 Pt 141 : 2004, which is very similar to IEC 72/72A.

10.2.7 Temperature classification

Winding insulation thickness is normally designed to cope with the hottest point for an ambient temperature of +40°C at an altitude of up to 1000 m. If the motor is exposed to excessively high temperatures then the service life of the insulation, and thus the motor, is considerably reduced. It is therefore necessary to use suitably designed insulation if the motor is to be operated at high temperatures.

Motors which will operate at ambient temperatures below 40°C and a sea level are capable of safely producing more than the standard nameplate rating without problems. The motor manufacturer should be contacted to assess the possibility of a motor upgrade.

EN 60085 : 2004, which is related to IEC 85, categorises insulation material according to temperature and insulation classes which are designated by means of a number and a letter. These represent the upper limit of use for normal operating conditions and acceptable service life for the particular insulating material, see Figure 10.9. For example, the 120 (E) indicates that the insulation can be used up to a maximum of +120°C, ambient temperature of 40 + temperature rise 75 + safety margin 5.

The temperature rise of an electric motor can be determined by means of direct temperature readings or by measuring the resistance of the motor windings when cold and hot, respectively, as follows:

$$\text{Temperature rise } °\text{C} = 225 - \left(\frac{\text{cold resistance}}{\text{hot resistance}} - 1\right) + 5 \pm 15$$

LIBERTY EXHIBIT 1034, Page 299
This book belongs to Robert Durham (rdurham@thewaylabs.com)
Copyright Elsevier 2024

For extra safety, and increased insulation life, some purchasers will specify Class "F" insulation with the temperature rise limited to Class "B" specification. This means the insulation runs 20 to 25°C cooler than designed.

Motors for potentially explosive atmospheres have additional restrictions placed on temperature rises. To avoid ignition of any gas present in the atmosphere, the motor temperature is restricted according to a grouping for the gas(es) likely to be present. All flammable gases have been allocated one of six categories. The maximum motor temperature, according to BS 4683, EN 50014 and EN 50018 for flameproof motors, are shown in Table 10.8.

Temperature class	Maximum surface temperature°C
T1	450
T2	300
T3	200
T4	135
T5	100
T6	85

Table 10.8 Maximum surface temperatures for flame-proof motors

10.2.8 Potentially explosive atmospheres

Special regulations apply for electrical equipment and installations. For example where there is a potential fire or explosion hazard because of the generation, handling or processing of flammable liquids, vapours, mists, etc. These regulations also apply in areas where there are other kinds of explosive materials, such as dust. Fire hazardous liquids, vapours and gases are defined and classified according to their flash point, see Section 2.1.7.

Electrical equipment should not be installed in potentially explosive locations if this can possibly be avoided. If this is unavoidable then the apparatus must conform to the relative standards and regulations.

BS 5345 offers guidance in the selection and installation of electrical apparatus. The code corresponds to the IEC recommendations for electrical apparatus for use in explosive atmospheres, although the numbering systems are different. BS 4683: Part 2 = IEC 79-1, Electrical apparatus for explosive atmospheres, prescribes features for flameproof enclosures and groups them according to the type of atmosphere for which they are suitable and gives dimensions and permitted gaps.

Hazardous areas are classified in zones according to internationally accepted concepts, BS 5345 Part 2 and IEC 79-10, as follows:

Zone 0 in which an explosive gas-air mixture is continuously present, or for long periods.

Zone 1 in which an explosive gas-air mixture is likely to occur in normal operation.

Zone 2 in which an explosive gas-air mixture is not likely to occur in normal operation, and if it occurs it will exist only for a short time.

In practice, physically defining a zone or zones around a piece of equipment may be a problem. American API 500 and NFPA 30 produces very small zones. RoSPA and the HSE CS5 regulations produce much larger zones. There are no agreed European or international regulationsbecause of the different approaches adopted by chemical and electrical engineers.

As a rule standard squirrel-cage three-phase motors, mechanically and electrically adapted, or derated, are used for hazardous environments. To maintain effective protection it is important that both installation and servicing are carried out thoroughly and carefully.

Potentially explosive gases are divided into groups. Group I is reserved for underground mining applications. Normal industrial and processing applications are covered by Group II, which is subdivided into IIA, IIB and IIC. BS 5345 Part 1 and IEC 79-12 list gases and vapours which have been classified, indicating their temperature class and group. A few gases and vapours cause problems and have not been classified; acetylene is an example. A motor environment should be described fully: Zone 1 Group IIA T3.

Potentially explosive atmospheres can be created by dust clouds. Layers of dust on equipment can be ignited by hot surfaces as well as by flame or spark, see BS 6467 and BS 7535. Some dust clouds can be ignited by temperatures as low as 280°C and dust layers at 225°C.

Zones for dust are designated Z — dust present under normal operating conditions, and Y — dust present only under abnormal operating conditions. Physical protection testing specifically for dust, IP rating, is conducted using French chalk with particle sizes down to 1 μm. IP 6x designates complete immunity to dust ingress. The minimum physical protection recommended for Zone Y or Z is IP 65.

10.2.9 Certification

Electrical equipment manufacturers design in accordance with the requirements for the standards relating to their equipment. To be certain that their equipment does comply with all the requirements, the equipment is submitted to an independent test authority, see Section 10.2.1, who checks the equipment and certifies compliance.

When equipment has been certified the type of certification is shown on the equipment nameplate. The following information appearing:

- applicable standards
- test house identification
- test house certificate number

As part of a project quality assurance programme, the purchaser may ask for a copy of the actual test certificate. In extreme cases, say a T5 or T6 temperature limitation, the purchaser may send an inspector to review the original test house certificate and confirm the photocopy to be a true copy.

10.3 Motor types

The most common type of electric motor used for driving pumps is probably the multi-speed, single phase canned motor with a wet rotor; this is the motor type used to drive water circulators in domestic central heating systems. Single phase cage induction motors are used for smaller pumps with power requirements up to several kW, e.g. barrel emptying pumps which need to be portable and be fed from wall sockets. For industrial and process applications, the 3-phase, fixed speed squirrel-cage motor is definitely the most popular.

10.3.1 Constant speed AC motors

10.3.1.1 Synchronous motor

This type of motor is characterised by the fact that speed is totally dependent upon the frequency of the electric supply and the number of poles, see Section 10.1.5. The motor runs at constant speed irrespective of load.

The synchronous motor must be fitted with a special starter winding, which is disconnected during operation. Also necessary is a DC energised magnetic winding; the DC being supplied by a generator in the motor. The reactive power can be regulated by means of varying the magnetisation. A synchronous motor can, therefore, contribute to an increase of the power factor cos φ, see Sections 10.1.3 and 10.1.4.

For pump applications synchronous motors are normally used in larger sizes and in cases where there are special requirements. The reason being that this type of motor is relatively complicated, costly and sensitive to frequency variations in the

LIBERTY EXHIBIT 1034, Page 300
This book belongs to Robert Durham (rdurham@thewaylabs.com)
Copyright Elsevier 2024

supply system.

10.3.1.2 Squirrel-cage motors

Squirrel-cage seems an odd name for a motor type. It is an old name. If the design was invented today it would probably be called something like "Hamster wheel". The important electrical parts of the rotor resemble the exercise wheel found in hamster cages. Squirrel cage motors are also called simply "cage" motors.

Three-phase squirrel-cage induction motors are the predominant type for industrial and process pump applications. The construction is simple, requiring a minimum of maintenance and spare parts. Their starting qualities are generally good. There are usually two types of rotor to choose between: simplex and double-cage. The former is used for direct-on-line starting if the starting torque does not need to be high. The simplex rotor is the most common and is especially suited when frequent momentary overloading occurs.

Motors for submersible pumps are usually 3-phase motors. Although single phase motors are not unknown for this purpose.

Squirrel-cage motors are constructed on the principle that a speed differential exists between the rotating stator magnetic field and its rotor, thereby maintaining induction in the rotor in a simple and reliable manner. The speed of an induction motor is therefore somewhat less than that of a corresponding synchronous motor with the same number of poles, see Section 10.1.5. The speed of an induction motor reduces with increased load, see the relationship between torque, power and speed in Section 10.1.6. The direction of rotation can be changed by means of simple switching.

Squirrel-cage motors are popular because the simple design can be adapted to suit many situations. Slipring and DC motors, because of their internal rubbing connections, are not as easy to protect for hazardous area situations. Also the internal rubbing connections are subject to wear and require maintenance. Motors of over 100MW have been supplied.

10.3.1.3 Slipring motors

In this type of motor the stator construction is identical to that of the squirrel-cage motor. The rotor windings are connected to rotating sliprings on the rotor. By connecting the rotor windings to an external power supply via resistances during starting, considerable limitation of the starting current can be achieved. The resistance can be adapted to suit the desired starting torque.

During starting the resistance can be successively reduced as required as speed increases, and this can be arranged as an automatic function. The resistance is completely disconnected at full load speed and the sliprings are shorted to create, in effect, a cage rotor, the principle of which is shown in Figure 10.10. The resistance is successively reduced as speed increases. Figure 10.11 shows the effect of a starting sequence of a slipring motor with five resistance steps.

The connection of starting resistance to the rotor windings is via brushes rubbing on the sliprings. Sliprings and brushes have been standardised in BS 4999 Part 147 which is identical to IEC

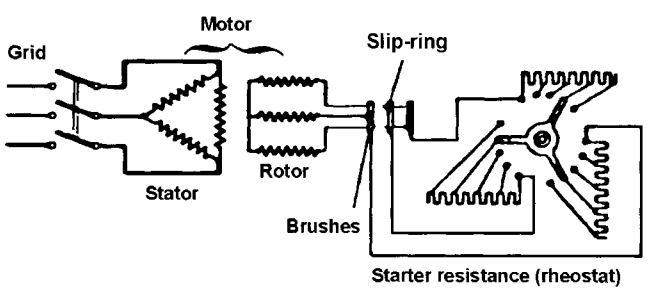

Figure 10.10 Wiring diagram of a slipring motor

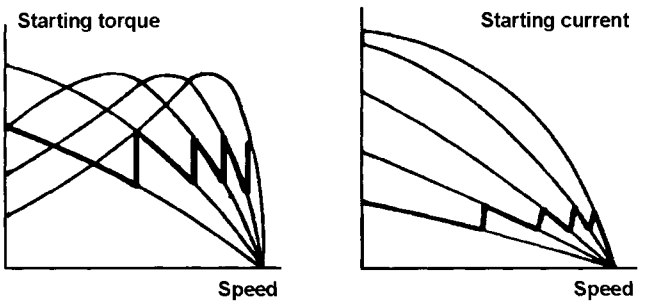

Figure 10.11 Starting torque and current for a slipring motor

136. Slipring motors are used when there is a requirement for low starting current and in cases where the starting torque is relatively high or the run up time is long. This type of motor can also be used when speed regulation of the pump is required.

10.3.2 Variable speed AC motors

10.3.2.1 Pole-changing motors

By using pole-changing motors, see Section 10.1.5, discrete speed regulation can be achieved. For pump operation it is common to use two-speed motors whereby the combination of pole numbers determines the speed. The combination 2/4 gives speeds of 3000/1500 r/min, the combination 2/8 gives 3000/750 r/min. The speeds quoted are ideal without consideration of slip. Lower efficiencies are normally expected at low speeds. Three and four-speed motors are available.

For the usual type of two-speed motor the stator is fitted with separate windings for each set of poles. The output of the motor will thus be relatively low when only half of the stator capacity is used for each set of poles. The same winding can, however, be used for both sets of poles by means of a special connection method, the Dahlander connection, see Figure 10.12. Motors with this type of winding cannot be Star-Delta started. (See Section 10.4.3.)

Pole-changing motors are constructed as cage electric motors. Starting can be achieved at either the low or high speed. In the latter case, however, it does not always follow that the starting current will be correspondingly lowered.

10.3.2.2 Variable frequency motors

Section 10.1.5 showed that AC motor speed is a function of the supply frequency and the number of poles in the motor stator. Pole-changing motors achieve discrete speeds by changing the number of stator poles. Up until about 30 years ago it was very difficult and costly to change the frequency of AC power supplies. Then the development of power electronics made it possible to convert AC to DC and then DC to any frequency AC. The DC current was switched on and off at high speed to generate a sinusoidal waveform.

The new solid state power electronic components allowed high currents to be switched at voltages up to about 600. This was ideal for low voltage 3-phase systems and standard 3-phase squirrel-cage motors. As frequency inverters developed from the original current and voltage source devices, additional features were added. The motor supply current was compensated,

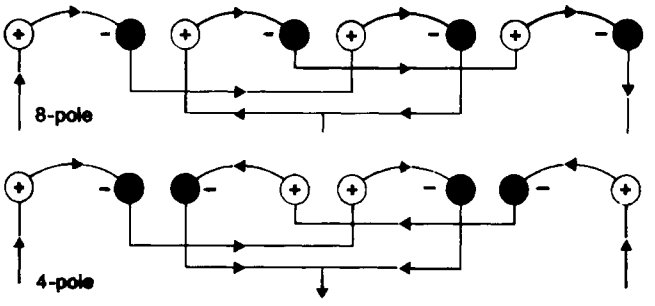

Figure 10.12 Principle of pole-changing stator winding for two-speed motors

LIBERTY EXHIBIT 1034, Page 301
This book belongs to Robert Durham (rdurham@thewaylabs.com)
Copyright Elsevier 2024

at low frequencies, to allow full load torque to be developed. The high speed switching technique was refined to allow varying "switched on" periods, known as pulse width modulation.

Modern inverters can drive multiple motors simultaneously. In theory, inverters can offer a speed range of 1% to 100%, in practice the minimum allowable pump speed will be 5 to 10%. inverters are capable of supplying frequencies up to 400 Hz, which is useful if a high speed motor is required. Contactors for starting are built into the inverter cubicle.

The 3-phase supply produced by inverters is not as smooth as the standard current available from the grid. The distortion of the waveform can cause heating in the motor. Some motors may require derating to operate with an inverter. Others may make more noise when operating with an inverter. Motors which are required to run at low speeds, at full torque, for extended periods may need to be fitted with a separated motor driven cooling fan. The inverter cubicle may have to be mounted "close" to the motor; the maximum cable length should be confirmed.

Some inverter packages have poor low frequency performance resulting in cyclic motor speed variations, or "cogging". Inverter packages emit radio frequency interference, RFI. The interference is transmitted from the inverter into the electric supply system. Small inverters produce little interference. Large inverters can produce significant interference, enough to cause problems for electricity supply companies. If an inverter drive over 500 kW is planned, consult the local electricity supplier. The small problems which can occur are more than compensated for by the increased versatility of continuously variable speed over a wide range. In order to ensure compatibility between the motor and the inverter, it is advisable to buy both from one vendor.

The use of an inverter to supply motor power can invalidate the hazardous area certification of a motor. This problem can be overcome by certifying the motor and the inverter together. The German test house PTB specialises in this type of testing. Certification problems, and overheating problems, can sometimes be remedied by fitting thermistors in the motor windings which are connected to the contactor "hold-in" coil. Overheating problems with motor shafts have occurred; winding temperature detectors may not solve this particular difficulty.

Modern inverter circuits are sophisticated and can offer many useful features; the following are pertinent to pump applications:

- Short circuit protection
- Earth fault protection
- Set minimum speed
- Set maximum speed
- Programmable acceleration
- Programmable deceleration
- Torque limit setting for starting
- Torque limit setting for normal running
- Automatic reset to minimum speed on trip
- Smooth recovery from momentary power failure
- Slip compensation (for accurate flow only)
- Motor voltage/current indication
- Diagnostic fault indication

Modern pulse width modulation drives produce an almost constant power factor, close to 1.0, irrespective of the motor duty. Depending upon the pump type, the inverter may be required to supply 150% torque for 10 or 20 seconds for starting. The method of speed control must be compatible with the process control system; manual, 0 to 10 V DC; 4 to 20 mA DC, RS 232, RS 422, RS 485, IEEE 488. Remote control and telemetry, via radio or microwave links, is possible for outlying installations.

Variable frequency supplies can be applied to synchronous motors to produce variable speed motors. Slip compensation is not required because the motor is locked to the supply frequency. Salient pole rotor machines are ideal for high speeds. These drive packages would be used for larger power requirements, 1 MW and larger. Designs are available for 5 MW at 8000 r/min. Motors are installed for 3.5 MW at 7720 r/min, 5.3 MW and 9.15 MW. Brushless motors are possible by using standard induction techniques for the rotor excitation current. The lagging power factor, which varies with speed, may need correction on large powers. The increased cost of these motor/inverter packages can be weighed against the increased efficiency. The modified inverter design can be up to 7% more efficient than conventional squirrel-cage inverters.

The switched reluctance motor attracts much attention because of three useful features. The motor rotor can be manufactured from a single steel forging and does not require windings or a "cage". The rotor is suitable for very high speeds. The power electronic controls are simpler and cheaper than those required for squirrel-cage motors. The motor does not tend to overheat at low speeds when delivering high torques. The variable speed switched reluctance motor could replace a variable speed squirrel-cage motor and a gearbox. High motor speeds allow the use of smaller pumps for some applications. Direct drive positive displacement pumps are a possibility.

Some inverters have been supplied for motors over 100MW. Always purchase the motor and the inverter controls from the same supplier. By following this advice there will not be any problems fixing either or both if incompatibility appears to be affecting performance.

10.3.3 Variable speed DC motors

Before the advent of power electronics, variable speed drives which required accurate speed and torque control would have been DC. The DC power supply would have been supplied by a motor-generator set; a squirrel-cage motor driving two dynamos. One dynamo would supply the field current, the other for the armature, commonly known as Ward-Leonard. By using two dynamos, the two current supplies could be controlled independently. Also control was achieved through the low power excitation currents; heavy current power cables were wired direct from the dynamos to the motor.

Power electronics changed DC motor control as significantly as it affected AC motor control. DC could now be derived electronically without motor-generators. DC motor control equipment includes two sets of rectifiers to allow independent supplies to the motor field and armature. DC motors can be designed for any voltage, up to about 600 V, and any speed. Small motors, up to 7.5 kW, have field voltages of 150 to 360 V and armature voltages of 180 to 300 V. Larger motors have armature voltages up to 500 V. Motor speeds are generally between 1500 and 3000 r/min.

Common specifications for DC systems include:

- 20:1 speed range at constant torque
- 150% torque for 10 seconds
- 2% speed change for 100% load change
- Set minimum speed
- Set maximum speed
- Programmable acceleration
- Programmable deceleration
- Set current limit

LIBERTY EXHIBIT 1034, Page 302
This book belongs to Robert Durham (rdurham@thewaylabs.com)
Copyright Elsevier 2024

For accurate speed control tacho feedback can be added, and the speed change reduced to 0.5%. Small standard units are available with 0 to 10 V DC or 4 to 20 mA DC control signals. Larger units can have the same control facilities as AC inverters. For units over 7.5 kW, speed stability can be as good as 0.1% and overload current rating extended to 30 seconds.

Power electronic controllers for DC motors produce a lagging power factor which varies with speed. This will not be a problem on small drives. Small variable speed DC systems are very economical but the motors can be larger than standard AC; AC variable frequency systems become more attractive as the drive power increases.

There is no simple guide to the economic changeover. The particular application requirements will determine which drives are suitable. AC variable frequency drives can now do almost everything the DC drive was intended to do. DC motors can be a problem for hazardous areas. The commutator and brushes, like sliprings and brushes, require extra maintenance over simple squirrel-cage motors.

10.4 Motor starters

Single phase starting was covered in Section 10.1.8 and 3-phase starting is now discussed in some detail.

10.4.1 Protection

Figure 10.13 shows how a typical 3-phase motor wiring diagram. All electric installations must be safe and include protective devices for personnel, the wiring as well as the motor and any motor control equipment. IEC 60947-4 covers motor starters and contactors. It has been reported that over 60% of motor failures were caused by:

- Insulation failure
- Overloading
- Stalled rotors
- Single phasing

The various protective devices are described in the following Sections.

10.4.1.1 Short circuit protection

The purpose of the short circuit protective device is to quickly disconnect the motor, starter/contactor and any control equipment from the supply in the event of a short circuit or earth fault. Protection can be provided by fuses or circuit breakers. Fuses are old-fashioned and slow to replace, but extremely reliable and fail-safe. Miniature plastic-cased circuit breakers, using magnetic sensing, are available for the smallest loads. Resetting is very quick. Short circuits can be caused by broken cables and damaged insulation.

10.4.1.2 Overload protection

This is built into the starting contactor by means of a current detection device, an overload relay. Two popular methods are available; thermal and magnetic.

Thermal protection is accomplished by passing the motor current through a bimetallic strip. Due the difference in expansion of the two metals the strip bends as it warms up. The temperature rise of the strip is related to the current passing through. When the strip bends passed a set limit, the "hold-in" coil circuit is broken and the contactor opens.

Magnetic protection is implemented by using the variation in magnetic strength of a coil as the flowing current varies. When a set magnetic pull is exceeded the "hold-in" coil circuit is broken. Dampening of thermal bimetallic strips is inherent in the mass of the strip. Dampening of the magnetic devices is provided by adjustable dash-pots.

Motor stopping with overload symptoms can be caused by:

- Pump running out on curve
- Liquid SG too high
- Pump running at relief valve accumulation
- Poor cable insulation
- Single phasing
- Bearing seizure
- Solids trapped in wear rings

Single phasing is caused when the connection between one of the phases is broken while a motor is running. The motor will continue to run but at a slightly lower speed. The current drawn by the two working phases will increase by about 75% causing overheating in the windings. A motor with a broken phase connection cannot be started.

10.4.1.3 High temperature protection

Motor winding temperature detection has already been mentioned. Thermistors normally, or resistance temperature detectors, RTDs, are optionally embedded within the motor field windings. One per phase is standard, two per phase for critical applications. As the windings warm up during normal operation the temperature can be measured and indicated. A high temperature switch can be included in the circuit to alarm and/or trip at set temperatures.

The motor will overheat under the following conditions:

- Developed power too high (overload)
- Too frequent starting
- Single phasing
- Earth fault in a winding
- Ambient air too hot
- Cooling system fault

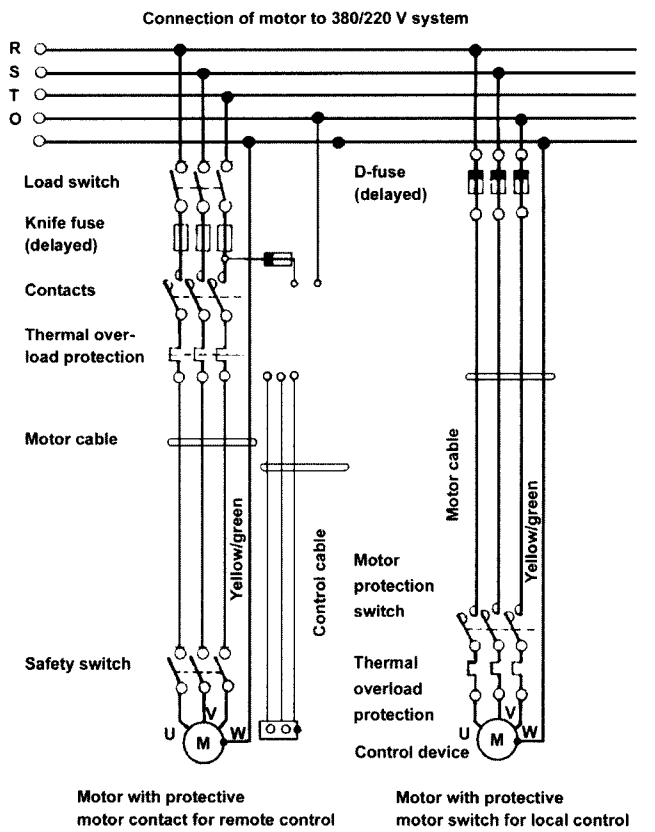

Figure 10.13 3-phase motor wiring diagram

LIBERTY EXHIBIT 1034, Page 303
This book belongs to Robert Durham (rdurham@thewaylabs.com)
Copyright Elsevier 2024

- Fan problems
- Motor covered in dust
- Motor mechanical problem

Thermistors and RTDs can work with the starter overload protection and allow current protection to be set a little higher for better starting performance.

10.4.1.4 Safety switch

For safety reasons, when the motor controls are distant from the motor, in a control room for instance, it is necessary to fit some local control next to the motor. In the event of an emergency, personnel close to the motor can stop it before too much damage is done. The local safety switch must have a "stayput" stop button to prevent the motor being restarted remotely. Also, it is a good idea to have a lockable isolator for maintenance purposes.

10.4.1.5 Ammeter

An ammeter is used for measuring the motor's operating current. It is connected to one phase only on the assumption that the phases are balanced. In the event of single phasing, the current will increase significantly or drop to zero. Regular readings from the ammeter should be logged, these can indicate trends in the motor or pump performance.

Manufacturers produce motor protection devices which are completely independent of the starter/contactor. The devices measure parameters in all three motor phases. If a fault is detected the starter/contactor is tripped using the "hold-in" coil.

The following conditions can be monitored:

- Unbalanced load
- Single phasing
- Short circuit
- Earth fault
- Thermal overload
- Repeated start
- Long run up time
- Locked rotor

Sections 10.1.8 and 10.3.1.3 should be read before investigating squirrel-cage motor starting in detail.

10.4.2 Direct-on-line (DOL)

When starting a squirrel-cage motor direct-on-line, DOL, there is a substantial inrush of current from the supply, about 600% full load current, FLC, which results in a local voltage drop. This affects the motor as well as other equipment connected to the supply. Suppliers of electricity therefore lay down certain restrictions in relation to DOL starting. Normally DOL starting is only permitted for motor sizes up to 7.5 kW. It is therefore necessary to take suitable precautions to limit the starting current of larger motors. Figure 10.14 shows the difference in torque and current for DOL and star-delta, Y-Δ starting for a squirrel- cage motor.

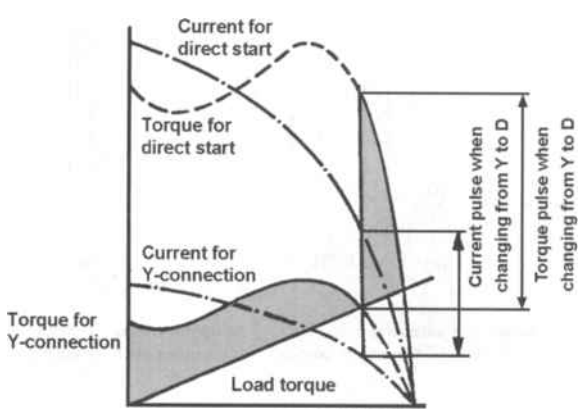

Figure 10.14 Squirrel-cage motor starting torque and current

DOL starting will start most pumps. Most will have a locked rotor torque, (see Section 10.1.6), of 130% and a pull-up torque of over 110%. With the safety margin between required power and installed power, most motors will accelerate the pump fairly quickly. However, some motors have very poor starting characteristics. Locked rotor torque can be as low as 80% and pull-up torques down to 70%. These motors may have been derated for hazardous area operation. Pumps with high inertias, long drive trains, or positive displacement pumps starting on load, may have serious problems when the starting torque reduces to less than 100%. In these situations a sealed fluid coupling may help.

10.4.3 Star-Delta (Y-Δ)

This is the usual method for starting large motors. In principle, this means that when starting, the motor's windings are connected between the phase cables and the neutral cable, Y connection. Two windings are connected between each pair of phases. Each winding then receives a lower voltage than that for which they are intended.

A 3-phase motor for 380 V only receives 220 V, see Section 10.1.2, and the motor develops only a small part of its starting torque, which of course means that the acceleration time is extended. At approximately 90 to 95% of normal operating speed the stator winding connections are changed over automatically to the system phase cables, Δ connection, which then receives full voltage. Figure 10.14 again illustrates the comparison between DOL and Y-Δ respectively for a squirrel-cage motor. Star-Delta starting requires about 200% FLC.

If Star-Delta starting is to be used, care must be taken to ensure that the run up time is not so long as to allow the heat generated by the motor, prior to achieving full speed, to reach damaging proportions. Star-Delta creates more starting heat than DOL. It is also necessary to check that the motor torque will be sufficient to aid starting i.e. it must be greater than the load torque at all times during run up.

It should also be noted that changing from Y to Δ can cause a substantial torque and current pulse if performed too early . For this reason it is desirable to achieve a speed which is as near to maximum speed as possible using the Y connection. Y-Δ starting is often unsuitable for pump motors because of the rapid increase in load torque with speed. Starting positive dis- placement pumps direct-on-line is usually impossible. If DOL is not possible and if the starting torque is too low when using Y-Δ starting then a soft start, variable frequency drive or slipring motor may be necessary. A sealed fluid coupling may help.

10.4.4 Soft starts

Soft starts are an electronic method of controlling starting current. The soft starter is wired between the motor and a DOL contactor. By using a thyristor to control the supply voltage to the motor, the starting current can be controlled. The supply voltage can be programmed to increase over a fixed period of time or the supply current can be limited during the starting sequence.

Soft starters allow a very smooth acceleration of the motor unlike DOL and Y-Δ. Some sophisticated units allow the motor torque to be held at a preset value during starting. Other versions have energy conservation optimisers which reduce the power consumption when the motor is running light. A soft start will probably still peak at a minimum of 200% FLC.

Because the soft start is electronic, a wide range of extra features can be built in without a large increase in cost. The following features are available on some units:

LIBERTY EXHIBIT 1034, Page 304
This book belongs to Robert Durham (rdurham@thewaylabs.com)
Copyright Elsevier 2024

- Adjustable thermal overload protection
- Unbalanced phase detection
- Single phasing
- Inch or jog function
- Low speed-low load operation
- Internal diagnostics
- Adjustable soft stop

Soft starters cost about twice as much as Y-Δ starters. The extra features and protection, plus possible savings on cabling, maximum demand charges and reduced surge problems, may make them worthwhile.

10.4.5 Resistance

Star-Delta starting reduces the starting current by reducing the starting voltage. For a 380 V system, the starting voltage would be reduced to 220 V. Starting current and torque is a function of the square of the applied voltage. By applying 58% voltage, the current and torque are reduced to 33% full load values.

By using resistance connected in series with the windings, any suitable value of voltage can be applied. By decreasing the resistance value in steps, similar to a slipring motor rotor resistance, the motor torque and current can be gradually increased. This type of starting is similar to soft start but without the electronics. Because of the reduced starting torque, and the lack of diagnostics associated with electronic methods, resistance starting must be monitored carefully to ensure the motor accelerates successfully.

10.4.6 Reactor and transformer starters

Other methods of limiting the starting current are reactor and transformer starters. Both these methods involve reduction of both starting current and starting torque. It is therefore necessary to check that sufficient starting torque is available.

10.5 Noise

The quiet running of electric motors is increasingly important and special construction modifications can be made to achieve this. However, the noise level requirements of the motor should not be more stringent than for other components, which can often generate quite high noise levels. The noise level of the motor should not be taken in isolation. The noise level of the pump unit should be considered, and if too high the various options available should be reviewed.

Noise from motors is generated by the cooling system, by the bearings and also by the magnetic circuit. The dominant source of noise depends upon the size of the motor, its speed, design and construction. Bearing and magnetic noise cause vibration in the motor and this can be transmitted through the baseplate/skid to other locations.

Small motors are generally quiet; as motor speed and size increases the noise level increases. Table 10.9 illustrates the trends for squirrel-cage motors with IP 54 enclosures.

		Sound pressure level dB(A)	
Motor power kW	Motor speed r/min	Normal design	Quiet option
0.75	2850	63	
0.75	1400	48	
0.75	920	65	
0.75	700	48	
132	2965	93	84
132	1480	84	81
132	985	80	
132	735	74	

Table 10.9 Electric motor noise at 1 m

A standard requirement is for equipment packages to have noise levels below 84 dB(A). As pump packages increase in power, this noise restriction creates problems. Also a complex package may have multiple motors; oil pumps, circulation pumps, cooling water pumps. A partial solution is to locate equipment in areas which are designated "Ear Protection Zones". Personnel in these areas must wear ear protection. This approach is much more cost effective, when possible, than fitting acoustic enclosures. Acoustic enclosures are very costly and can lower the overall efficiency of the pump unit if ventilating fans are necessary. Acoustic enclosures are disliked by maintenance departments because access to the machine is restricted.

Electric motors are very reliable and routine maintenance, weekly or monthly, is low. Acoustic enclosures around motors cause less problems than enclosures around pumps.

There is no international agreement on restricting noise levels. National regulations or EU regulations apply.

10.6 Maintenance

The electric motor requires regular attention, as does the pump itself, in order to give good performance and reliability. The basic prerequisites for long service life of an electric motor are, apart from selecting the correct motor, careful alignment, mounting and proper lubrication. Regular balancing checks to prevent out-of-balance running should also be made. Vibration can be caused by faulty bearings and windings or irregular air gaps and also by out-of-balance of the couplings. Motors fitted with accelerometers can be monitored continuously for vibration problems.

Most electric motors use rolling contact bearings and it is important to ensure that they are correctly lubricated. The service intervals between lubrication depends upon the type of bearing and the environment in which it operates. Lubrication instructions should form part of the motor documentation and must be followed carefully. Removal of bearings for inspection should be avoided whenever possible since they can be damaged when being withdrawn and reassembled. Checks should also be made by listening to bearing noise and observing the lubricant. See Chapter 12 for further information.

Motor control equipment must also be maintained. Starters which operate regularly must have their contacts examined and replaced if necessary. Poor connections at the starter can lead to single phasing and high resistance causing low motor volts.

10.7 Engines

This Chapter has been devoted to electric motors. Engines are used to drive pumps in certain circumstances. The most popular occasions are for portable pumps and for fixed installations where electricity has insufficient power or is unreliable. In some cases a very good supply of fuel is much cheaper to use than electricity. See Chapter 6, Section 6.9.2 for information on the different engine types available.

Engines can be treated like electric motors in most respects but there is one major difference which cannot be ignored. Motors supply the driving torque to the pump very smoothly, once started. Engines, on the other hand, do not have such a smooth torque characteristic. Engines produce a cyclic speed irregularity due to the firing of the individual cylinders. The magnitude of the irregularity is dependent upon the number of cylinders. Engines with six or more cylinders are fairly smooth. A large number of pumps, particularly small contractors site pumps, are driven by single or two cylinder engines.

The nature of the power supply must be remembered when choosing and sizing couplings and gearboxes. Service factors must be increased. The torsional stressing of the pump shaft may need reconsidering depending upon the ability of the chosen coupling to dampen the cyclic speed changes.

LIBERTY EXHIBIT 1034, Page 305
This book belongs to Robert Durham (rdurham@thewaylabs.com)
Copyright Elsevier 2024

The cyclic speed changes of engines can excite torsional vibrations in the drive train. In general, this is not a problem for rotodynamic pumps with few stages. It can however be a severe problem for reciprocating pumps. Whenever a reciprocating pump is driven by an engine, a torsional vibration analysis must be performed. If the analysis highlights excessive amplitudes or stresses, or nodes at gear meshes, then corrective action must be taken. Changing coupling stiffness is the first modification.

Torsional vibrations caused by engines can almost certainly be eliminated completely by using a fluid coupling at the engine crankshaft.

10.8 Turbines

Turbines are used to drive large pumps or small pumps when a free steam supply is available, see Chapter 6, Section 6.9.2 for the different types available. Gas turbines are used in situations where a large amount of power is required in a small space or high speed is required.

API 611 and ANSI/API 612 are steam turbine specifications for refinery applications. API 616 is a specification for gas turbines for refinery applications. Turbine driven pumps generally run at 3000 r/min and faster. Fast pumps can experience problems with lateral shaft vibrations and critical speeds.

Rotodynamic pumps are categorised as "stiff shaft" or "flexible shaft". If the pump always operates below the first critical speed then it is "stiff shaft". If, during run up, the pump passes through the first critical speed then it is "flexible shaft". The problem is complicated because of the variables involved.

The following aspects of pump design affect the critical speed:

- Length of shaft between bearings
- Number of stages
- Type of bearings, plain or rolling
- Bearing housing support
- Type of coupling
- Design of driver
- Other drive train items, gearbox, etc

The critical speed is further complicated by differences of opinion as to whether the critical speed should be "dry" or "wet". The critical speed can be calculated for all the rotating masses running in air; this is easy. When the pump is operating the rotor is surrounded by liquid. Liquid in the wear rings, centre bush and throat bush(es) creates a bearing effect so that the "wet" critical speed is higher than the "dry". The "wet" can be difficult to calculate accurately as the bearing effects of some of the components cannot be predicted precisely.

In theory, a pump handling a liquid with a viscosity of 100 cSt will derive more bearing stiffness from internal close clearances than a pump handling a 5 cSt liquid. It is worthwhile considering critical speed calculations and monitoring during test when the wear ring material combinations are marginal for the liquid, and there is high speed operation with many stages.

10.9 Power recovery turbines

Some pumps operate with power recovery turbines as the sole driver. Processes which operate continuously and have pressurised liquid streams which must be expanded to a lower pressure are ideal. However in most cases the turbine is used to augment the main driver and unload it. A main driver is usually required for start-up until the process has stabilised. Oil refining and reverse osmosis water purification plants are popular applications. Adding a power recovery turbine to a pump which has a main driver considerably lengthens the shaft system.

Adding a power recovery turbine to a motor driven pump package is not the most efficient use of the fluid energy supply. Power recovery turbines assisting an electric motor cause the motor to operate at low load and hence low efficiency and low power factor. It would be more efficient to use the power recovery turbine to drive an alternator which could produce electricity for use anywhere on the site.

Section 10.8 should also be read in relation to critical speed, as well as Section 6.9.2, in Chapter 6, for details of power recovery turbine designs.

10.10 Motor selection illustration

A clean fixed speed water pump for a flow of 25 l/s at 65 m differential head is to be purchased and connected to a 3-phase system with 415V supply, and the electric current requirement is to be calculated. The manufacturer's literature shows the pump efficiency to be 70%. The following method may then be used:

First determine the pump's power requirement, see Chapter 4, combine equations 4.3 and 4.5.

$$P = \frac{r \cdot Q \cdot g \cdot \Delta H}{h}$$

$$P = \frac{1000 \cdot 0.025 \cdot 9.81 \cdot 65}{0.7}$$

$$P = 22773\ W = 22.8\ kW$$

As the pump is fixed speed, a 3-phase squirrel-cage motor is appropriate. A safety margin of 10% is considered necessary so the minimum motor size acceptable would be $22.8 \cdot 1.1 = 25kW$.

Select a 30 kW motor. The motor has a full load efficiency of 89%, power factor of 0.89 and current of 53 amps. At normal operating conditions the motor will deliver 76% power, when the efficiency will be 88% and the power factor 0.87.

Using equation 10.6 from Section 10.1.2 the motor current can be calculated:

$$I = \frac{22.8 \cdot 1000}{415 \cdot 1.732 \cdot 0.87 \cdot 0.88}$$

$$I = 41.4A$$

During normal operation of the pump unit the current consumption should, therefore, be approximately 41 A.

An ammeter connected to the pump motor gives a good indication of normal operation. Any increase or decrease in the current consumption indicates that there is a fault somewhere or the pump duty has changed and that an investigation is necessary.

The power supply to which the pump is connected must be fitted with fuses or a circuit breaker. The motor also requires a starter. The fuses or circuit breaker, and the motor starter must be rated for the motor full load current, not the running current. When the motor is started, star-delta probably, the motor will absorb 2 to 3 times the full load current, not 2 to 3 times the operating current, see Figure 10.14. The fuses must therefore be of the delayed action type to prevent spurious tripping. The cable sizing can be based on the normal running current providing starting does not occur too often.

10.11 National Standards bodies

The following is a list of countries and their national standards bodies who are members of ISO, International Standards Organisation.

Algeria - IANOR - Institut algarien de normalisation

Argentina - IRAM - Instituto Argentino de Normalizacian

LIBERTY EXHIBIT 1034, Page 306

This book belongs to Robert Durham (rdurham@thewaylabs.com) Copyright Elsevier 2024

Armenia - SARM - National Institute of Standards and Quality
Australia - SAI - Standards Australia International
Austria - ON - Austrian Standards Institute
Bangladesh - BSTI - Bangladesh Standards and Bangladesh Standards and Testing Institutio,
Belarus - BELST - Committee for Standardization, Metrology and Certification of Belarus
Belgium - IBN - The Belgian Institution for Standardization
Bolivia - IBNORCA - Instituto Boliviano de Normalizacian y Calidad
Bosnia and Herzegovina - BASMP - Institute for Standards, Metrology and Intellectual Property of Bosnia and Herzegovina
Brazil - ABNT - Associao Brasileira de Normas Tacnicas
Brunei Darussalam - CPRU - Construction Planning and Research Unit, Ministry of Development
Bulgaria - BDS - Bulgarian Institute for Standardization
Canada - SCC - Standards Council of Canada
Chile - INN - Instituto Nacional de Normalizacion
China - SAC - Standardization Administration of China
China - CSSN - China Standards Information Center
Colombia - ICONTEC - Instituto Colombiano de Normas Tacnicas y Certificacian
Costa Rica - INTECO - Instituto de Normas Tacnicas de Costa Rica
Croatia - DZNM - State Office for Standardization and Metrology
Cuba - NC - Oficina Nacional de Normalizacian
Czech Republic - CSNI - Czech Standards Institute
Denmark - DS - Dansk Standard
Ecuador - INEN - Instituto Ecuatoriano de Normalizacian
Egypt - EO - Egyptian Organization for Standardization and Quality Control
El Salvador - CONACYT - Consejo Nacional de Ciencia y Tecnologa
Estonia - EVS - Eesti Standardikeskus
Ethiopia - QSAE - Quality and Standards Authority of Ethiopia
Finland - SFS - Finnish Standards Association
France - AFNOR - Association franaise de normalisation
Germany - DIN - Deutsches Institut fur Normung
Greece - ELOT - Hellenic Organization for Standardization
Grenada - GDBS - Grenada Bureau of Standards
Guatemala - COGUANOR - Comisian Guatemalteca de Normas
Guyana - GNBS - Guyana National Bureau of Standards
Hong Kong - ITCHKSAR - Innovation and Technology Commission
Hungary - MSZT - Magyar Szabva¡nyagyi Testalet
Iceland - IST - Icelandic Council for Standardization
India - BIS - Bureau of Indian Standards
Indonesia - BSN - Badan Standardisasi Nasional
Iran - ISIRI - Institute of Standards and Industrial Research of Iran
Ireland - NSAI - National Standards Authority of Ireland
Israel - SII - The Standards Institution of Israel
Italy - UNI - Ente Nazionale Italiano di Unificazione
Jamaica - JBS - Bureau of Standards, Jamaica
Japan - JISC - Japan Industrial Standards Committee
Jordan - JISM - Jordan Institution for Standards and Metrology
Kazakstan - KAZMEMST - Committee for Standardization, Metrology and Certification
Kenya - KEBS - Kenya Bureau of Standards
Republic of Korea - KATS - Korean Agency for Technology and Standards
Kuwait - KOWSMD - Public Authority for Industry, Standards and Industrial Services Affairs
Kyrgyzstan - KYRGYZST - State Inspection for Standardization and Metrology
Latvia - LVS - Latvian Standard
Lebanon - LIBNOR - Lebanese Standards Institution
Lithuania - LST - Lithuanian Standards Board
Luxembourg - SEE - Service de l'Energie de l'Etat, Organisme Luxembourgeois de Normalisation
Malaysia - Department of Standards Malaysia
Malta - MSA - Malta Standards Authority
Mauritius - MSB - Mauritius Standards Bureau
Mexico - DGN - Direccian General de Normas
Moldova - MOLDST - Department of Standardization and Metrology
Morocco - SNIMA - Service de Normalisation Industrielle Marocaine
Netherlands - NEN - Nederlandse Norm, maintained by the Nederlands Normalisatie Instituut (NNI)
New Zealand - SNZ - Standards New Zealand
Nicaragua - DTNM - Direccian de Tecnologa, Normalizacian y Metrologa
Nigeria - SON - Standards Organisation of Nigeria
Norway - SN - Standard Norge (Standards Norway)
Oman - DGSM - Directorate General for Specifications and Measurements
Pakistan - PSQCA - Pakistan Standards and Quality Control Authority
Palestine - PSI - Palestine Standards Institution
Panama - COPANIT - Comisian Panamea de Normas Industriales y Tacnicas
Papua New Guinea - NISIT - National Institute of Standards and Industrial Technology
Peru - INDECOPI - Instituto Nacional de Defensa de la Competencia y de la Proteccian de la Propiedad Intelectual
Philippines - BPS - Bureau of Product Standards
Poland - PKN - Polish Committee for Standardization
Portugal - IPQ - Instituto Portuguas da Qualidade
Romania - ASRO - Asociatia de Standardizare din Romania
Russian Federation - Rostekhregulirovaniye - Federal Agency for Technical Regulation and Metrology
Saint Lucia - SLBS - Saint Lucia Bureau of Standards
Saudi Arabia - SASO - Saudi Arabian Standards Organization
Serbia and Montenegro - ISSM -Institution for Standardization of Serbia and Montenegro
Seychelles - SBS - Seychelles Bureau of Standards
Singapore - SPRING SG - Standards, Productivity and Innovation Board
Slovakia - SUTN - Slovak Standards Institute
Slovenia - SIST - Slovenian Institute for Standardization
South Africa - SABS - South African Bureau of Standards
Spain - AENOR - Asociacian Espaola de Normalizacian y Certificacian
Sri Lanka - SLSI - Sri Lanka Standards Institution
Sweden - SIS - Swedish Standards Institute
Switzerland - SNV - Swiss Association for Standardization
Syrian Arab Republic - SASMO - The Syrian Arab Organiza-

LIBERTY EXHIBIT 1034, Page 307
This book belongs to Robert Durham (rdurham@thewaylabs.com)
Copyright Elsevier 2024

tion for Standardization and Metrology

Taiwan (Republic of China) - BSMI - The Bureau of Standards, Metrology and Inspection

Tanzania - TBS - Tanzania Bureau of Standards

Thailand - TISI - Thai Industrial Standards Institute

Trinidad and Tobago - TTBS - Trinidad and Tobago Bureau of Standards

Turkey - TSE - Tark Standardlari Enstita

Uganda - UNBS - Uganda National Bureau of Standards

Ukraine - DSSU - State Committee on Technical Regulation and Consumer Policy of Ukraine

United Kingdom - BSI - British Standards Institution

United States of America - ANSI - American National Standards Institute

Uruguay - UNIT - Instituto Uruguayo de Normas Tacnicas

Venezuela - FONDONORMA - Fondo para la Normalizacian y Certificacian de la Calidad

Vietnam - TCVN - Directorate for Standards and Quality

10.12 Useful references

IEC 60038 Ed 6.2b, IEC Standard voltages.

EN 60079-1:2004 Electrical apparatus for explosive gas atmospheres. Flameproof enclosures 'd'.

EN 60079-14 Electrical apparatus for explosive gas atmospheres - Part 14: Electrical installations in hazardous areas (other than mines) (IEC 60079-14:2002); German version EN 60079-14:2003 DIN-adopted European Standard.

IEC 60034-5 Ed. 4.0 b:2000 Rotating electrical machines - Part 5: Degrees of protection provided by the integral design of rotating electrical machines (IP code) – Classification.

BS 4999-141:2004 General requirements for rotating electrical machines. Specification for standard dimensions.

EN 60085:2004 Electrical insulation. Thermal classification.

NFPA (Fire) 30-00 Flammable and Combustible Liquids Code.

BS 4999-147:1988 General requirements for rotating electrical machines. Specification for dimensions of brushes and brush-holders for electrical machinery.

IEEE 488.1-2003 Higher Performance Protocol for the Standard Digital Interface for Programmable Instrumentation.

IEC 60947-4-1 Amd.1 Ed. 2.0 b:2002 Amendment 1 - Low-voltage switchgear and controlgear - Part 4-1: Contactors and motor-starters - Electromechanical contactors and motor-starters.

Physikalisch-Technische Bundesanstalt (PTB), Bundesallee 100, D-38116 Braunschweig Germany, Tel: 0531 592 3006, Fax: 0531 592 3008, Email: presse@ptb.de, www.ptb.de.

ANSI/API 611 Fourth Edition 1997 General-Purpose Steam Turbines for Petroleum, Chemical and Gas Industry Services.

ANSI/API 612 Sixth Edition 2005 Petroleum, Petrochemical and Natural Gas Industries-Steam Turbines-Special-purpose Applications.

API 616 Fourth Edition 1998 Gas Turbines for the Petroleum, Chemical, and Gas Industry Services.

Fire & Explosion ATEX Regulations Part 1 - The Regulations implement a European Directive called, the ATEX Directive No.1992/92.

IEC 60529, Degrees of protection provided by enclosures (IP code).

IEC 1000-3-2, Electromagnetic compatibility (EMC) - Part 3: Limits - Section 2: Limits for harmonic current emissions (equipment input current ~16 A per phase).

IEC 1000-3-3, Electromagnetic compatibility (EMC) - Part 3: Limits - Section 3: Limitation of voltage fluctuations and flicker in low-voltage supply systems for equipment with rated current ~16 A.

LIBERTY EXHIBIT 1034, Page 308

This book belongs to Robert Durham (rdurham@thewaylabs.com)

Copyright Elsevier 2024

Ancillary equipment 11

11.1 Introduction
11.2 Mountings
11.2.1 Baseplates
11.2.2 Skids
11.2.3 Trailers
11.2.4 Lifting frames
11.3 Belt drives
11.4 Gearboxes
11.5 Relief valves
11.5.1 Spring-loaded
11.5.2 Pilot-operated
11.5.3 Air-assisted
11.5.4 Shear pin and buckling pin relief valves
11.5.5 Bursting discs
11.6 Choosing non-return valves
11.6.1 General
11.6.2 Water hammer and pressure surge in pipes
11.6.3 Choice of type of non-return valve
11.6.4 Sizing non-return valves
11.6.5 Pressure drop
11.6.6 Pitfalls
11.6.6.1 Centrifugal pumps operating in parallel
11.6.6.2 The suction side of centrifugal pumps
11.7 Accumulators
11.8 Pulsation dampers
11.8.1 Gas-charged dampers
11.8.2 Inertial dampers
11.8.3 Acoustic dampers
11.8.4 Pressure pulsations
11.8.5 Computer simulation
11.9 Instrumentation
11.9.1 Integrated control and diagnostics
11.9.2 Annunciators
11.9.3 Connection to process pipework
11.10 Useful references

LIBERTY EXHIBIT 1034, Page 309
This book belongs to Robert Durham (rdurham@thewaylabs.com)
Copyright Elsevier 2024

11.1 Introduction

Ancillary equipment is frequently supplied as part of a complete package but which is not regulated by easily accessible standards. In this context it is worth explaining two definitions which form the basis of European pump standards.

A "pump" is a single piece of equipment which terminates at its suction and discharge connections and its shaft end. Pump feet are not mentioned but these are another terminal point.

A "pump unit" consists of a pump and any other associated equipment which is defined as being included in an assembly. Whenever the term "pump unit" is applied, it must be defined to show the content intended. Equipment supplied loose, for mounting in the user's process pipework, would not constitute part of a pump unit. In practice, the smallest pump unit would be a pump plus a baseplate; when the purchaser was supplying the motor and coupling. A large pump unit could consist of several pumps, couplings and motors, pipework and controls all mounted on one baseplate.

Small pumps can be installed without any additional equipment. This applies particularly to in-line pumps mounted in and supported by the pipework. Larger pumps tend to have other pieces of equipment to assist with the prime function, pumping liquid.

11.2 Mountings

Pump units are generally mounted on a structure to support and align the various components. The structure itself must perform additional functions depending upon its duty.

11.2.1 Baseplates

Pump units are mounted on baseplates to allow the unit to be bolted down. Unless otherwise stated, baseplates are designed for mounting on concrete foundations and to be supported over the whole length by grouting. The pump supplier must be aware if a baseplate is intended for mounting on structural steelwork with intermittent supports. The design of the baseplate side members may need adjusting to preserve alignment. If the baseplate is to be grouted in with epoxy grout rather than concrete, a special paint finish will be required on the contact surfaces. If the baseplate is to be welded down to structural steelwork the pump supplier should be informed.

The baseplate should cover the perimeter of the pump unit. Only in exceptional circumstances should equipment extend beyond the baseplate outline. By allowing the baseplate to form a perimeter, delicate and sensitive equipment can be protected by a substantial static structure. If equipment must extend over the baseplate edge, provision should be made to protect the equipment by enlarging the concrete plinth. Problems with motor terminal boxes overhanging the side of the baseplate can be cured by top-mounted terminal boxes.

When a pump unit is built "to order" the purchaser is in control and provides lists of national or international standards, and includes proprietary specifications for different aspects of the pump/pump unit. Baseplates are however a problem. There are no good standards. Consequently, the purchaser has to use inappropriate ones such as "Structural steelwork for buildings".

Baseplates are not designed to the same sort of criteria as buildings. Deflections are much smaller and stressing is much lower. The pump supplier will normally have plenty of experience designing and fabricating baseplates and will simply require a few little reminders about good practice.

For example, all structural welds must be continuous. Main longitudinal members must be one continuous piece with no joints. Welds for main cross-members to main longitudinals must be on all sides of the cross member. Pads for equipment must be machined and thicker and larger than the equipment foot. Pads for pumps and drive train must be fully supported. Drive train pads must be machined low, about 3 mm, so that shims are always fitted. At least two pads, one at each end, should be wide enough to accommodate a spirit level without disturbing equipment. Baseplates, with a fully assembled weight of over 2500 kg must have levelling bolts at each foundation bolt.

Individual pieces of equipment over 500 kg must have provision for horizontal positioning bolts; these bolts can be detachable. Provision must be provided for a four point lift with equal length slings. If a lifting beam is necessary the pump supplier must state so and quote a price for its supply. Lifting arrangements must comply with insurance company regulations.

The simplest lifting arrangement is to incorporate full width tubes across the baseplate. The user inserts a longer bar through the tubes to accept the eyes of the slings.

Baseplates for larger pumps are designed to cope with transportation and installation without suffering permanent distortion. This is not always true for smaller pumps. Some small pumps may be delivered with temporary bracing or reinforcement to prevent permanent distortion.

Baseplates can be constructed with or without various desirable features, which must be specified at the inquiry stage.

These options are:

Drain rim — The baseplate incorporates a full length sloping trip tray with one drain connection.

Full depth cross-members — The structural cross-members extend to the bottom of the main longitudinal members.

Shallow cross-members — The cross-members do not extend closer to the bottom of the main longitudinal members than a specified distance.

Lifting lugs — Four lugs, shaped to accept standard shackles, are welded on the outside of the outer longitudinal structural members.

Top covers — All accessible areas of the baseplate top are fitted with covers; solid, grid, permanent, removable.

Laser mounts — A baseplate can be fitted with specific brackets to allow optical alignment equipment to be fitted to assist levelling.

In some instances, options may not be possible. Shallow cross-members may not be viable if the supplier has agreed that the pump can accept very large nozzle forces and moments.

When a user purchases a special pump from a manufacturer it is important to have a general arrangement drawing showing the overall sizes, positions of nozzles and foundation bolts. The pump manufacturer may include a preliminary drawing with the quotation but the user needs a certified drawing to finalise pipework and foundations.

Chapter 10, Section 10.2.6 shows that some dimensions are standardised on standard motors. Special motors, and other types of drivers, need a drawing to confirm all the relevant dimensions. Manufacturers of motors and engines only issue certified drawings after a purchase order has been placed. The pump manufacturer cannot issue a certified pump general arrangement drawing until receipt of the certified drawings for the drive train. At the beginning of a pump order, time is often taken up with issuing purchase orders and finalising certified drawings.

11.2.2 Skids

A skid is very much like a baseplate but it is not intended to be fastened down to concrete or structural steelwork. It is designed to rest on a reasonably flat surface. Consequently the longitudinal structural members are slightly deeper, and perhaps heavier, than a similar baseplate.

LIBERTY EXHIBIT 1034, Page 310
This book belongs to Robert Durham (rdurham@thewaylabs.com)
Copyright Elsevier 2024

Most of the comments for baseplates are valid for skids. The obvious exceptions are those requirements for baseplate levelling screws and an option for permanent distortion during transportation or installation. Skids are very rugged. A skid package will operate satisfactorily with four points of support.

Skids are constructed with angled or rounded ends on the main longitudinal members to assist movement. Towing points, to accept slings, are provided at both ends. Full depth cross-members are not an option.

11.2.3 Trailers

Trailers are a slightly more complicated version of a skid. When purchasing a trailer-mounted pump one of the two major options must be specified before any other decisions can be made; off-road or roadworthy.

Off-road trailers are designed specifically for rough terrain and cannot be towed on public roads in Europe. Trailers can have two or four wheels and the wheels may or may not have pneumatic rubber tyres. Four wheel trailers may have a steering axle; brakes are an option not mandatory. Depending upon the size and design of the trailer, stabilising jacks may be essential. There are no standards specifically for off-road trailers. Safety requirements inherent in the Machinery Directive must be met, but there are no specific design requirements.

Roadworthy trailers must comply with the current relevant legislation. These trailers must be complete with pneumatic rubber tyres, suspension, brakes and lights. It may be worthwhile specifying a maximum speed for towing.

ISO 1102, 1285, 3731, 4141, 8703 and 8785 may prove useful.

Some pumps are packaged on a vehicle; the size of the vehicle being dependent upon the size of the pump and the nature of any accessories. The facilities required on such vehicles must be fully specified.

11.2.4 Lifting frames

Lifting frames can be considered as a special version of a skid. Pumps mounted in lifting frames are not intended to be bolted down but are not "ruggedised" in the same way as skids. Pumps mounted in lifting frames are intended to be manhandled and must be as light as possible, see Chapter 1. The purchaser must know the "environmental" conditions of use and how many personnel will be available for manhandling. There may be strict limitations on size and shape if pumps are to be carried through doors or hatches.

Lifting frames are best constructed from tube or rectangular hollow sections. The size should be suitable for a good grip; designated lifting points are not always accessible. Thin wall, high strength alloy tube can be used to reduce weight. The lifting frame should completely surround the pump and no protuberances are allowed. It is essential to know how many operating orientations can be used; upside-down or on the side.

Lifting frames are used for site pumps, fire fighting pumps and general purpose marine pumps. Petrol engines provide the best power to weight ratio but electric pumps could be used if a supply was available. The manufacturer requires a detailed specification of the complete "operating environment" to package a pump unit successfully.

11.3 Belt drives

Belt drives are an economical method of speed increasing, transmitting and reduction. The speed does not necessarily have to change. Belt drives, 1:1, are used as an alternative to couplings. The driver and driven shafts can be moved to better locations not possible when using a coupling.

Belt drives should be considered when the following conditions exist:

- Power rating up to 200 kW
- Speed ratio up to 7:1
- Belt linear speed up to 40 m/s
- Infrequent speed changes
- Ambient temperature -30 to 65 °C
- Fairly clean ambient air
- Shaft phasing unimportant, (Vee-belts)

Belt drives are available for higher powers but these generally involve special pulleys incurring extra costs and causing spares availability problems. Belts can be used at higher speeds but this necessitates using a specially designed drive. Pulleys with quick mounting hubs are standard for inch and metric sizes. Pulley sizes can be changed fairly quickly for irregular speed modifications.

Belts are available certified for underground mining applications and for potentially explosive atmospheres. Cast iron metric pulleys generally comply with ISO 4183 and belts ISO 4184.

Vee-belts with a service factor of 1.0, for use with rotodynamic pumps, would have an efficiency of about 96%. Three cylinder reciprocating pumps would normally have a service factor around 1.6, efficiency 94 to 96%.

Vee-belts do slip slightly and require occasional tension checking. These shortcomings can be overcome by using toothed belts. Higher powers can be transmitted in the same space requirements at slightly higher efficiencies. Toothed belts are not popular because of the noise they produce. Toothed belt drives with 1500 r/min motors are very noisy, 105 dB(A) being possible. The silencing of belt guards causes problems with air circulation and belt cooling.

Belt drives cannot be fitted with continuous monitoring instrumentation. At present, to inspect the condition of a belt drive the drive must be stopped and the guard removed. Belt guards should be treated in a similar manner to coupling guards, see Chapter 9, Section 9.13.

11.4 Gearboxes

Gearboxes can be applied to any shaft speed and any ratio is possible. By selecting the correct service factor, working life can be long with minimal maintenance.

The most popular style of gearbox is the parallel shaft helical gearbox. Table 11.1 shows the range of ratios possible with varying numbers of gear meshes or gear pairs.

Number of meshes	Range of ratios
1	1.0 to 6.4
2	6.6 to 21
3	18 to 100
4	90 to 525

Table 11.1 Gear ratios of parallel shaft helical gearboxes

A pump unit can become quite long by the addition of a gearbox and an extra coupling. To reduce the overall length, a flange-mounted motor could be bolted directly to the side of the gearbox. Another method would be to replace one of the helical ratios with a bevel ratio. The gearbox input shaft could be located vertically on top of the gearbox. Epicyclic gearboxes and in-line helical gearboxes, both with flange mounted motors are popular for sizes up to 100 kW to minimise package dimensions.

Gearboxes are available with more than one ratio. Parallel shaft helical gearboxes are built with up to four ratios. These gearboxes are manual change and require the pump to be stopped before a change can be made. Special provision, "inching" or "jogging" of the drive motor, may be necessary in order to en-

LIBERTY EXHIBIT 1034, Page 311
This book belongs to Robert Durham (rdurham@thewaylabs.com)
Copyright Elsevier 2024

gage the dog clutches. Small units can be turned by hand from the high speed coupling. This type of gearbox is suitable when discrete speed changes are acceptable and changes do not occur too often. Maintenance personnel may be required to change gear if operators are unhappy or lack confidence for technical intervention. Efficiency is high, and because the gearboxes are made to order, ratios are exactly as required.

Semi-automatic multi-speed gearboxes, similar to automotive transmissions, are available from a few manufacturers. These gearboxes, designed for commercial vehicles, rail locomotives and marine applications, are normally used on portable engine driven pump packages. The number of gears varies from four to ten. A limited choice of ratios is possible but the multiplicity of ratios more than compensates for the lack of an optimum ratio. Speed changing can be manual or automatic via a process control system.

Epicyclic gearboxes are popular for larger and high speed applications; steam and gas turbine drivers. Very costly in comparison to parallel shaft helical boxes; but maybe more efficient. Epicyclic gearboxes can be used as a variable ratio transmission by adding a small control drive.

Gearboxes tend to rely on natural convection cooling. When necessary, fans can be added to the high speed shaft(s) to encourage forced convection. When fans are insufficient, an external cooling circuit can be added for the lubricating oil.

Most gearboxes have rolling contact bearings. Special versions can be built with plain bearings. ANSI/API 613 for high speeds and API 677 for special purpose gearboxes for refinery applications both require plain bearings as standard. Gearboxes with rolling contact bearings can manage with a simple splash lubrication system. Gearboxes with plain bearings may need an external pressurised lubrication system. API 614 specifies the requirements for refinery lubrication systems. API 614 systems tend to be "over-engineered" and require a lot of space; individual applications should be evaluated and designed accordingly.

Gearboxes are sized by using service factors. The service factor is dependant upon the smoothness of the drive and the smoothness of the load. The service factor adjusts the working tooth stresses to suit the application. Rotodynamic pumps handling clean liquids driven by an electric motor would have a service factor between 0.8 and 1.25. If the driver was a four cylinder engine, the service factor would increase to 1.0 to 1.5. For a reciprocating pumps the equivalent service factors would be 1.5 to 2.0 and 1.75 to 2.25.

There are no European standards for service factors. National standards exist in UK, Germany and USA. The American Gear Manufacturers Association (AGMA)is the most prolific for issuing standards. ANSI/AGMA 2001 covers rating factors for spur and helical gears. DIN 3990 covers service factors. The British Standard is considered to be the most conservative for through hardened gear designs. Most modern spur and helical gears tend to be case hardened; AGMA is considered to be the most conservative. DIN 3990 is thought to produce the most realistic designs for case hardened gears.

ISO TR 13593 was going to be a proper standard rather than a technical report. However, there are so many rating options, to keep everybody happy there is no standardisation. Service factors have become application factors. 13593 was not intended to confuse gearbox users, but that is the result.

Application factors will not deal with the life problem. The best way to specify a gearbox is to pick an old, well-tried standard that has been used successfully for many years. AGMA 913 is an old standard for spur and helical gears. Rotodynamic pumps driven by standard squirrel-cage motors for continuous operation, not frequent starting would be AGMA 913 SF= 1. For a three cylinder reciprocating pump driven by a squirrel-cage motor the factor would be AGMA 913 SF= 2. For pumps with five or more cylinders the service factor can be reduced to 1.75. To be absolutely sure of what is purchased it would be advisable to specify the minimum acceptable life of teeth and bearings, i.e.

- Minimum tooth life at rated conditions 85000 hours
- Minimum bearing life at rated conditions 30000 hours

If pumps are subject to cyclic operation, including duty changes, on-off or load-unload flow regulation, then the full operating conditions should be discussed with the gear manufacturer for suitable recommendations.

Unlike belt drives, gearboxes can be fitted with instrumentation to monitor the "health" of the teeth and the bearings. Accelerometers can be fitted to each shaft and the itself. Harmonic analysis of the vibration signals can show how wear is developing and if bearings are working correctly. Analysis of oil samples can indicate the onset of oil degradation and the level of metal particles.

11.5 Relief valves

Relief valves are fitted to piping systems and vessels to prevent excessive internal pressures damaging the equipment. When it is likely that a pump will produce pressures in excess of the system or vessel design pressure a relief valve should be fitted.

In the case of positive displacement pumps a relief valve must always be fitted to the discharge. Relief valves should be fitted as dedicated pieces of equipment. Modern designs allow relief valves to be combined with load-unload valves. Although this saves costs it is not a preferred method of construction. Relief valves fitted to pump discharges must be sized to pass the total pump flow. They are sometimes fitted in pump suction systems to prevent the pump experiencing excessive suction pressure leading to high axial thrust and subsequent bearing wear. In reciprocating pumps, high suction pressure can result in rapid wear of the crosshead pin bearings.

Some useful terms used in conjunction with relief valves are:

Set pressure — The pressure at which the relief valve will begin to open.

Overpressure — The pressure which is required for the relief valve to pass 100% flow. Sometimes called accumulation. For liquid relief valves purchased without any special requirements the overpressure will be 25% of the set pressure. Overpressure can be set as low as 8% in some cases.

Reseat pressure — The pressure at which the valve will close and reseal. Normally between 80 and 97% of the set pressure.

Back pressure — The pressure at the relief valve outlet connection when piped into a system.

Modulating action — The lift of the valve is proportional to the flow.

Pop action — Once the valve opens the lift is 100% until it closes.

Relief valves are connected to a short branch on the process pipework. The branch must be short so that there is no significant pressure drop between the process pipe and the valve seat. When the valve opens the flow is piped to a low pressure system. If the pump differential pressure is less than 20 bar, the relief valve outlet may be piped into the pump suction although it is always preferable to pipe the valve back to the suction source. If the relief valve outlet is not at atmospheric pressure, a back pressure is present, the valve may require bellows compensation and/or the size increased.

A pressure surge is created when a pop action valve opens; this may induce a pipe kick. Also, there may be a significant momentum reaction at the valve body. Check the magnitude of the reaction and reinforce or brace as appropriate.

LIBERTY EXHIBIT 1034, Page 312
This book belongs to Robert Durham (rdurham@thewaylabs.com)
Copyright Elsevier 2024

A special application of relief valves, not directly involving pumps, is thermal relief. When a piping system is built it is possible to have a length of pipe with an isolating valve at each end. If the pipe is full of liquid when both valves are closed high pressures can be created when the liquid expands due to temperature changes. Small spring-loaded relief valves are fitted to relieve the excess pressure.

Relief valves are built in three different styles to suit different applications and to provide different facilities. Two additional designs are available for special applications.

11.5.1 Spring-loaded

Spring-loaded valves are of the most basic and simplest of designs. The valve is held closed by a spring load. The liquid pressure under the valve seat has to overcome the spring load before the valve can open. As more liquid flows through the valve the lift increases. When the liquid stops flowing the valve reseats and seals. Manufacturers have proprietary nozzle and poppet designs, some with adjustable lift characteristics, to suit various applications. Spring-loaded relief valves are suitable for gases and liquids; pumps require a valve with a liquid trim. High viscosity liquids, such as lubricating oils and crude oil, may require modification to prevent the poppet sticking. Spring-loaded relief valves are the first choice for most applications.

Variable flow applications can create problems for spring valves. If the valve is required to pass flows less than 30%, stability and chattering can cause high wear rates and damage the seat resulting in poor sealing.

Spring-loaded valves are generally set at +10% with 10% overpressure. Running at overpressure is considered as intermittent. If longer running at overpressure conditions is necessary, this must be specified in the operating conditions. In some cases it is possible to use 25% overpressure to advantage; a smaller valve can be fitted. Low pressure applications and when the installed motor power is much larger than required are typical cases

11.5.2 Pilot-operated

Pilot-operated relief valves use liquid pressure to hold the valve closed. When the set pressure is reached the pilot releases all, or some, of the holding pressure and allows the valve to open. When the process pressure falls, the pilot re-energises and the valve is firmly closed. Pilot-operated valves are more costly than spring-loaded valves but they are more versatile. A pilot-operated valve can be set to have zero overpressure — a pop action. Once the set pressure has been reached, the valve opens 100%. A modulating pilot is also available.

The set pressure can be fixed closer to the operating pressure because the valve is normally clamped closed hydraulically. The reseat pressure can be adjusted to be as close as 97% of the set pressure. A set pressure of +5% and a 5% overpressure is a good compromise for system operation. A pop action valve can create pressure pulsations within the system, for this reason a modulating valve is preferable. Pilot-operated valves do not suffer instability at low flows.

11.5.3 Air-assisted

An air-assisted valve is a modified spring-loaded valve with pneumatic control. The poppet, as well as the spring load, is attached to a pneumatic diaphragm.

The valve is held closed by the spring force and the air pressure above the diaphragm. A control valve senses the pressure in the process pipe. When the liquid pressure reaches the set pressure the control valve releases the air above the diaphragm. The valve opens as a normal modulating spring-loaded valve. When the liquid pressure reduces to the reseat pressure the air is reapplied to the diaphragm, closing the valve.

The addition of the air assistance allows the set pressure, overpressure and reseat pressure to be brought closer together. As with pilot-operated valves, the operating pressures can be + 5%, 5% and 97%. A slightly higher reseat is possible.

The benefit of an air-assisted valve is in its back-up capability; if the pneumatics fail it will operate as a normal spring-loaded valve. The drawback is the cost and need for an air or gas supply. The valve does not use gas continuously; only when the valve operates, bottled gas is adequate.

11.5.4 Shear pin and buckling pin relief valves

These operate slightly differently to other valves. A shear pin valve is held closed by a relatively weak pin restraining a plunger. For the plunger to move, and allow the valve to open, the pin must be broken by direct shear at two points.

A buckling pin relief valve is held closed by a slender pin under direct compression at its ends. When the relief valve reaches set pressure, the axial load on the pin exceeds the critical load, the pin buckles and the valve opens.

In both designs the valve does not reset after opening. These styles of relief valve are often used for liquid/solid mixtures.

11.5.5 Bursting discs

Bursting discs or rupture discs can be used for over pressure protection. Both these devices consist of a thin membrane which is highly stressed. Under over pressure conditions the ultimate stress of the membrane is exceeded and the membrane fails. The system must be shut down to allow the disc to be replaced. Discs are very useful for hygienic, sterile or extremely hazardous applications. Disc assemblies can be built which are very easy to clean and sterilise. Most discs relieve to atmosphere and low pressure pipework is not fitted.

However, disc assemblies can easily be clamped between two flanges to allow the low pressure liquid to be recovered. A "clamped" disc version can be used in series with a normal relief valve for very hazardous applications. The disc performs as the primary safety device; during normal operating conditions there is no leakage. Over pressure conditions cause the disc to fail allowing liquid to flow through a normal relief valve. When operating conditions return to normal the relief valve closes and permits the process to operate. Normal operation can continue until it is convenient to replace the bursting disc.

11.6 Non-return valves

11.6.1 General

Non-return valves are incorporated in the pipe system to prevent, undesirable reverse flow. Normally the valve cannot be actuated by external sources, it is self-actuating, i.e. the flow alone determines its function. A non-return valve should be able to operate under varying conditions with respect to media, pressure, temperature, flow and viscosity. Non-return valves selected for clean liquid operation should not be expected to function as well when handling abrasive solids. A desire common to both suppliers and consumers is that it should be possible to use the same type of non-return valve under different operating conditions, i.e. its application should be universal.

In many pipe systems non-return valves have performed indifferently. A chattering non-return valve is extremely irritating, if not to say, hazardous. The valve is subject to considerable wear. The chattering releases forces which work on the pipes and supports, pumps and the valve itself. The risk of a breakdown of the system is therefore very great. Chattering valves indicate a change in flow velocity and perhaps the use of an incorrect valve type. For increased system reliability the true cause should be investigated.

LIBERTY EXHIBIT 1034, Page 313
This book belongs to Robert Durham (rdurham@thewaylabs.com)
Copyright Elsevier 2024

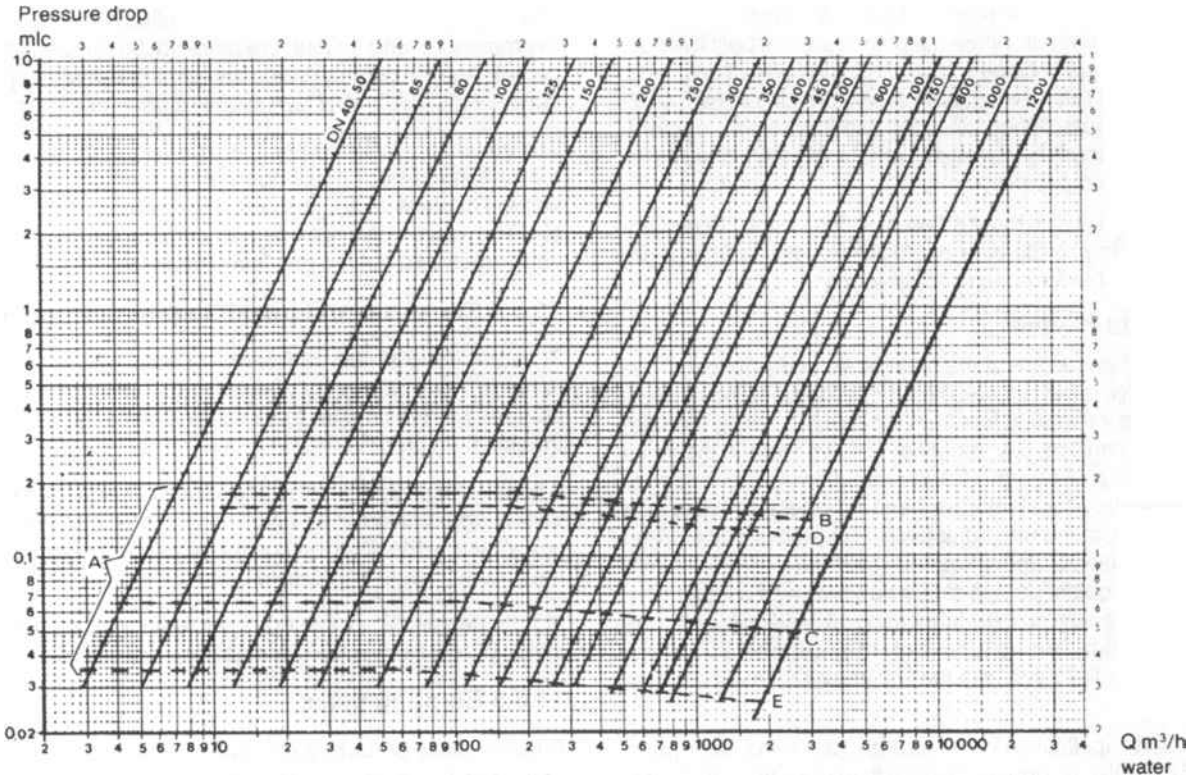

A. Before the valve is fully open the pressure drop is greater than indicated on the curve, see Figure 11.2

B. Valve is fully open - applies to designs with springs and horizontal pipes.

C. Valve fully open- applies to designs without springs and horizontal pipes.

D. Valve fully open - applies to designs with springs and vertical pipes.

E. Valve fully open - applies to designs without springs and vertical pipes

Figure 11.1 Butterfly check valves for water

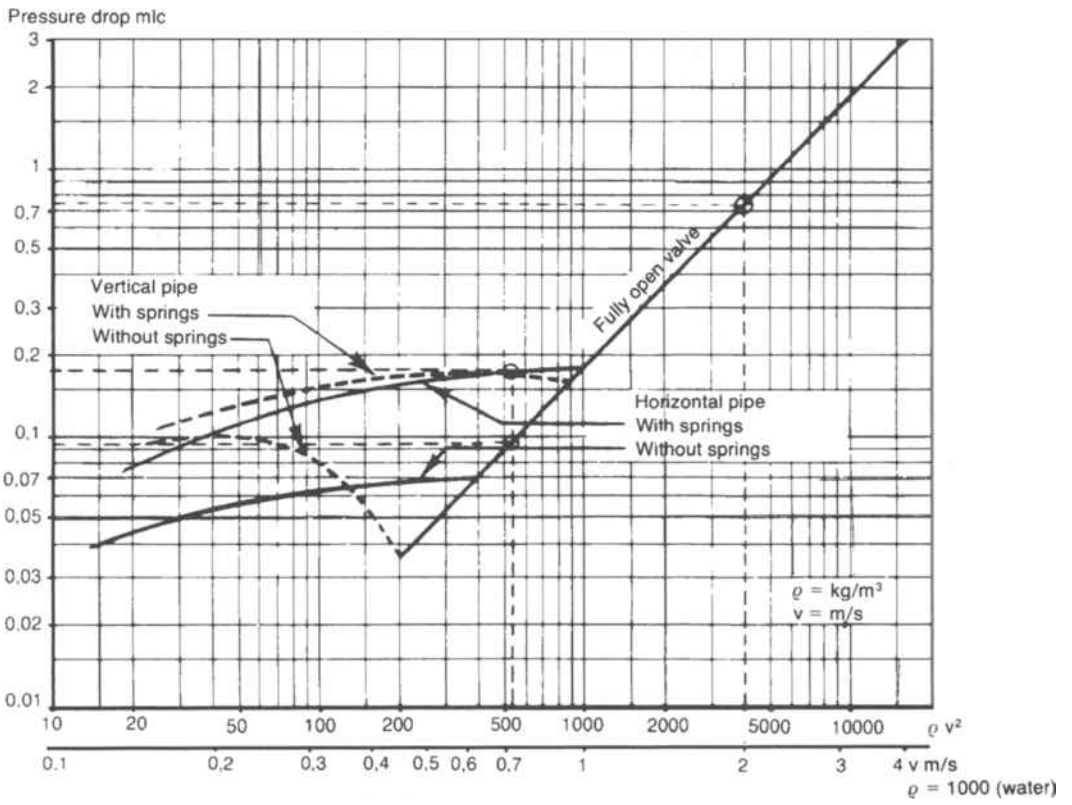

Figure 11.2 Butterfly check valves for liquids other than water

LIBERTY EXHIBIT 1034, Page 314
This book belongs to Robert Durham (rdurham@thewaylabs.com)
Copyright Elsevier 2024

11.6.2 Water hammer and pressure surge in pipes

Following a pipe fracture or shutdown of a pump in a pipe system, the forward flow is reduced and after some time it may be succeeded by a reverse flow. If this remains in operation for some time, the result can be that the pumps reverse their direction of rotation and attain high speeds. This usually entails damage to pumps, couplings and motors. Efforts are made to prevent reverse flow with the aid of automatic non-return valves.

Automatic non-return valves rely on forward flow to hold the valve open. The amount of valve opening or lift is dependant upon the flow velocity. When the flow velocity reduces to zero the valve closes. Due to the inertia of the moving components within the valve there can be a short delay between the flow stopping and the valve closing. The delay period can allow reverse flow to start. When the reverse flow is arrested, pressure surge takes place in the pipe system both upstream and downstream of the non-return valve.

11.6.3 Choice of type of non-return valve

For non-return valves the most important requirements are:

- Controlled closure in the event of reverse flow — reduced risk of line shock
- Low opening pressure — reduced risk of line shock
- Low flow resistance — low energy consumption
- Low maintenance requirements — low operating costs
- Reliable — low operating costs

The range of non-return valves is considerable. Table 11.2 lists popular types of non-return valve with their respective merits.

Type	Flow resistance	Risk of water hammer	Maintenance	Temperature restrictions
Swing-check valve	low	yes	low	no
Poppet valve	high	slight	medium	no
Disc valve	high	yes	medium	no
Piston valve	high	slight	medium	no
Ball check valve	medium/high	slight	low	no
Rubber tube valve	high	yes	medium	as low as 80 °C
Butterfly check valve	high	yes	low	no

Table 11.2 Types of non-return valves

11.6.4 Sizing non-return valves

It is important that the valve is sized so that it is fully open under normal steady state running conditions. If there is a flow variation the valve must be selected very carefully. At maximum flow the valve should not be wide open and up against the "stops". Minimum flow should not correspond to less than 50% opening. The inertia of the moving parts must be minimised and the movement damped.

In the case of non-return butterfly valves, operating under steady-state conditions, sizing is carried out in accordance with the following procedures and Figures 11.1 and 11.2.

For water

Use Figure 11.1:

1 Enter the figure along the "x" axis at the minimum normal flow.

2 Move vertically until the pipe diameter line is intersected.

3 Check valve operation by noting relative positions of curves A, B, C, D and E.

4 If valve not fully open, select a smaller diameter.

5 Check pressure drops at all flows.

For liquids of similar viscosity to water but differing densities

Use Figure 11.2:

1 Calculate the flow velocity in the pipe for the minimum normal flow.

2 Calculate ρv^2.

3 Enter the figure along the "x" axis at the ρv^2 value.

4 Move vertically until the valve lines are intersected.

5 If valve not fully open, select a smaller diameter at higher velocity.

6 Check pressure drops at all flows.

Examples

Using Figure 11.2

Example 1:

Water flow velocity 2m/s

pressure drop 0.73 mlc

Choose valve with spring

Example 2:

Air horizontal pipe

density r = 1.3 kg/m^3

flow velocity 20 m/s

$$\rho \cdot v^2 = 1.3 \cdot 20^2 = 1.3 \cdot 400 = 520$$

where:

v = velocity (m/s)

ρ = density (kg/m^3)

Q = water flow (m^3/s)

a) Without springs:

pressure drop 0.09 mlc

The valve is fully open

b) With springs:

pressure drop 0.17 mlc

There is a risk of clattering. Therefore choose a valve without springs.

11.6.5 Pressure drop

The pressure drop across the valve according to Figure 11.2 is based on the resistance figure Z = 3.6 for valves up to and including DN 250. For larger valves the drop in pressure is lower and the pressure drop values in the diagram should therefore be reduced by the factors stated below.

DN	300 - 350	factor 0.89
	400 - 700	factor 0.83
	750 - 1000	factor 0.78
	1200	factor 0.70

The pressure drop is dependent on density and flow velocity.

11.6.6 Pitfalls

11.6.6.1 Centrifugal pumps operating in parallel

Pumps for parallel operation are usually installed as shown in Figure 11.3. To avoid problems in cases when a second pump is to be started while the first is in operation, it is necessary for the pumps to have stable characteristics, see Chapter 5, Figure 5.24. The characteristics should be steep rather than flat, see Chapter 5, Figure 5.25.

In Figure 11.3:

LIBERTY EXHIBIT 1034, Page 315
This book belongs to Robert Durham (rdurham@thewaylabs.com)
Copyright Elsevier 2024

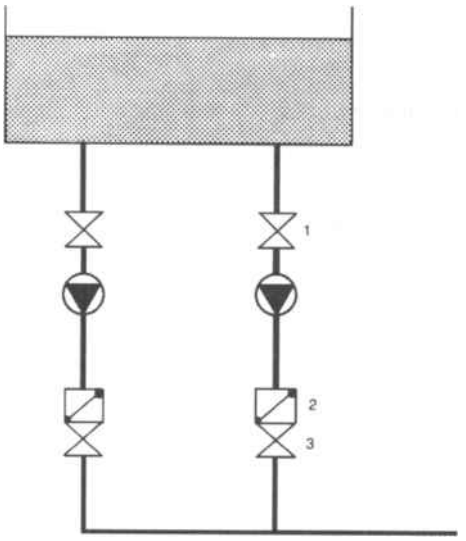

Figure 11.3 Pumps connected in parallel

1. Suction isolating valve for pump. Select a full-bore valve with a low pressure drop to avoid loss of NPSHa and the risk of cavitation. Full-bore ball valve or wedge gate valve.
2. A non-return valve with low pressure drop is selected to avoid losses of energy and with low risk of water hammer, i.e. poppet or ball check valve or in the case of small sizes a piston valve.
3. Discharge isolating valve after the pump with low pressure drop to avoid great losses of energy. Preferably a ball valve or wedge gate valve.

11.6.6.2 The suction side of centrifugal pumps

A centrifugal pump requires a certain pressure above the vapour pressure on the suction side, NPSHr, in order to operate correctly and to avoid cavitation. The non-return valve should therefore be located on the delivery side.

11.7 Accumulators

Accumulators are used for pressurised liquid storage in systems which require variable flow rates or intermittent flow requirements. Chapter 6, Sections 6.4, 6.5 and 6.6 show that storage volumes are necessary when the pump flow does not match the flow demand. Accumulators are suitable for pressurised applications up to 345 barg.

The accumulator consists of a pressure vessel which houses a bladder, rather like a balloon. The bladder is attached to the top of the pressure vessel by its gas valve. The bottom of the pressure vessel is piped to the process system. The bladder is pre-charged with nitrogen. When the accumulator is charged with process liquid, the nitrogen in the bladder is compressed to a higher pressure as its volume is reduced.

During the working cycle, the system pressure will fall when the pump is unable to match the demand. As the pressure falls, the nitrogen in the bladder expands and pushes some of the liquid out into the system. The next time the pump flow is greater than the system flow the accumulator will be recharged. The volume of liquid which can be stored is a function of the volume of gas.

As stated in Chapter 6, Section 6.4.6, it is the application of Boyle's Law for gases at constant temperature which controls the pressure and volume relationships. If more liquid is required, more gas must be provided. If a smaller pressure change is required, more gas must be provided.

Guidelines are available, which indicate the range of working pressures possible, and there are design charts. Working pressure ranges of up to 3.5 are possible, but this is far too large for normal pump applications, see the run-down of accumulators at the end of this Section.

Accumulators are manufactured with gas volumes of 200 l as standard. If these are too small, accumulators can be collected in racks and piped together. The pressure/volume characteristic can be enhanced by adding more gas volume. Standard nitrogen bottles can be piped into the gas side of the bladders. The liquid volume per unit volume of pressure drop is thus increased.

Bladders are not completely gas tight. As with tyres on a car, the gas pressure must be checked regularly and topped up when necessary.

Another application for accumulators is in lube and seal systems on large machines. Large machines, particularly high speed machines, do not always stop when the power is switched off. Such machines are normally stopped by control logic so that after the power has been switched off to the main driver the auxiliaries — lube oil pumps, seal oil pumps, cooling water pumps — carry on running for 30 seconds or a minute to allow the main pump to decelerate. After a preset time the control logic switches off the auxiliaries.

Controlled run-down such as this works well in normal circumstances but can cause problems in emergencies. If the main motor is high voltage and the auxiliaries are low voltage, it is possible to have a fault in the low voltage supply so that all auxiliaries are lost but the main motor is still running. Interconnection between the HV and LV systems could switch the main motor off as soon as the LV supply is lost. However, there are no auxiliary supplies for run-down.

The problem is solved by fitting and charging run-down accumulators. The auxiliaries would normally be started and allowed to stabilise before the main motor was started. This period can be used to charge the accumulators. Once charged, the system acts as though they are not there. When auxiliary power is lost the accumulators discharge their liquid into the auxiliary systems during the run-down. If the main motor was required to continue operating under these conditions it would be necessary to fit stand-by pumps to all the auxiliary services powered from an alternative supply, probably 24 V DC.

11.8 Pulsation dampers

Reciprocating pumps, cause flow variations and pressure pulsations in the system pipework because of the nature of the piston/plunger motion. Pulsation dampers are fitted to the suction and discharge systems of these pumps in order to reduce the severity of the flow disturbances. Pulsation dampers attempt to disconnect the pump from the system in terms of inertia. The flow variations produced by a pump cannot be changed. If the density of the liquid were zero, then there would be no pressure pulsations, no pipe vibration and the effect in the suction system, "Acceleration Head Loss", would disappear. The pulsation damper absorbs excess liquid and provides liquid when the pump is deficient. This is very similar to the action of accumulators but it happens much faster.

Flow variations are difficult to measure. Pressure pulsations are easy to measure and their effect is easy to observe. Pressure pulsations can be measured with a pressure transducer and displayed on an oscilloscope or captured for analysis by computer.

The peak-to-peak pressure value is easily evaluated. The effect of pressure pulsations is vibration of pipework. The product of the peak-to-peak pressure and the pipe bore area is a force; this force acts alternatively along the pipe. If the force is large in comparison to the mass of the pipe and the stiffness of the pipe supports, the pipe will vibrate. By reducing the peak-to-peak pressure, the severity of the vibration will be reduced. Pressure pulsations in suction pipework can create a serious problem for pumps. The negative half of the pressure pulse reduces the static pressure of the liquid in the pipework. If the static pressure is reduced below the vapour pressure the liquid will boil

LIBERTY EXHIBIT 1034, Page 316
This book belongs to Robert Durham (rdurham@thewaylabs.com)
Copyright Elsevier 2024

and form vapour bubbles. If the vapour bubbles enter the pump the pump will cavitate. Cavitation can drastically reduce pump reliability and significantly increase expenditure on spare parts. Dampers reduce the peak-to-peak pressure by reducing the flow variation.

Peristaltic pumps can suffer from significant flow variation induced pressure pulsations. Pulsation dampers can be used to reduce problems and are manufactured in three basic types:

- Gas-charged
- Inertial
- Acoustic

11.8.1 Gas-charged dampers

A gas-charged damper is similar in many respects to the accumulators described in Section 11.6. It relies on the increased compressibility of a volume of gas to absorb some of the flow variation.

Consider the discharge stroke of a single cylinder pump. When the piston/plunger accelerates towards maximum velocity the pressure at the pump increases due to liquid inertial loads and increased friction losses in the pipe system. If a pulsation damper was placed close to the pump, some of the liquid could flow into the damper, and increase the gas pressure, rather than flow up the discharge pipe. When the piston/plunger decelerated and the pressure at the pump decreased, the liquid would be forced out of the damper due to the gas pressure. The flow variation into the discharge pipe would be reduced thereby reducing the pressure pulsations. The suction system would react in a similar manner.

The volume of liquid which flowed into the damper would depend upon the gas volume and the nature of the gas. Nitrogen is nearly always used so the gas characteristics become constant. The volume of gas used in a damper is the important sizing criterion. The pump user or manufacturer specifies the residual pressure pulsations acceptable and the damper manufacturer calculates the gas volume required.

Gas-charged dampers are constructed in various styles. A popular style for suction systems is a vertical vessel which contains approximately 75% liquid. The remainder of the vessel is charged with nitrogen. No bladder or diaphragm is used to separate liquid and gas. This type of damper, also called a suction stabiliser, is very successful for low pressure and hot applications.

At higher pressures the nitrogen is absorbed more quickly into the liquid. This style of damper is a "flow-through" type; since all the liquid passes through the damper. Flow through dampers are also constructed with bladders or diaphragms to contain the gas charge, see Figure 11.4. Some dampers are constructed in a similar way to accumulators and are attached to a branch on the process pipe, Figure 11.5.

Gas-charged dampers must be pre-charged before use. The gas charge is usually 60 to 80% of the working pressure. Dampers without bladders or diaphragms can suffer problems with gas loss when the gas expands during shut-downs. In general, these dampers do not create a pressure loss and are the most used type of damper.

In some installations, the spares inventory is reduced by using high pressure pulsation dampers on low pressure suction systems. High pressure dampers are constructed with fairly rugged bladders and diaphragms; some over 20 mm thick. Heavy, thick diaphragms do not work very well with low differential pressures trying to move them. Consequently high pressure dampers do not achieve the predicted pulsating pressure attenuation. High pressure dampers are suitable for high pressures. Low pressure dampers are essential for good performance on low pressure suction systems.

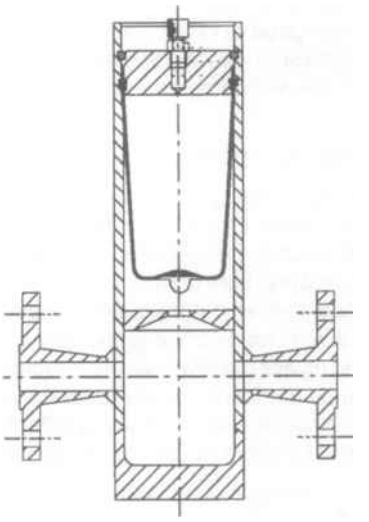

Figure 11.4 Flow through gas charged bladder damper

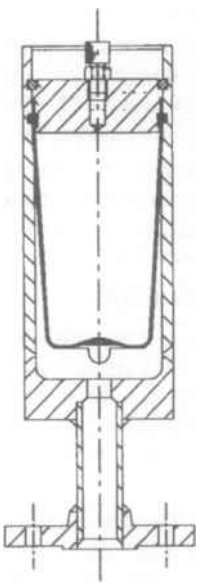

Figure 11.5 Single port gas charged bladder damper

11.8.2 Inertial dampers

Inertial dampers rely on a moving mass of liquid to limit the velocity changes in the discharge system. A mass of liquid inside a pressure vessel, is made to rotate as the liquid flows through. The mass of liquid acts as a flywheel, in mechanical terms, and reduces the flow variations. Inertial dampers are used for high temperature applications where elastomers are unsuitable, see Figure 11.6.

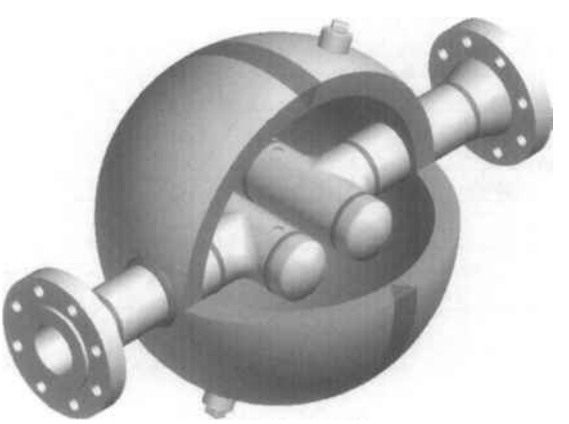

Figure 11.6 A typical inertial damper
Courtesy of Flo-Dyne Ltd

LIBERTY EXHIBIT 1034, Page 317
This book belongs to Robert Durham (rdurham@thewaylabs.com)
Copyright Elsevier 2024

There is no pressure limit on inertial dampers and they are unaffected by pump speed or discharge pressure. Inertial dampers do create a pressure loss and this must be considered in the pump selection. Inertial dampers are only used as discharge dampers.

11.8.3 Acoustic dampers

Acoustic dampers are designed specially for each application. Pressure vessels consisting of connected volumes and choke tubes attenuate discrete frequencies. The dampers are tuned to remove the worst pressure harmonics from the flowing liquid. Gas-charged and inertial dampers are broad-band devices; both attenuate a wide range of frequencies. Acoustic dampers are narrow-band devices; a few discrete frequencies are attenuated. Like inertial dampers, there are no moving parts other than the liquid. Acoustic dampers are unaffected by working pressure but very sensitive to changes of speed.

They would be of little use on infinitely variable speed pumps. All of the pump flow passes through the damper and a pressure loss is induced. Acoustic dampers can be used on the suction and discharge sides of the pump.

There are two major obstacles to popular use of acoustic dampers. Because they are designed for each specific application the cost is relatively high. To work effectively they must be large. Acoustic dampers are much bigger than any other damper.

When choosing a pulsation damper the initial cost must be weighed against running and maintenance costs. Gas-charged dampers may require gas every two weeks. If the gas charge is lost, can the process continue ?

11.8.4 Pressure pulsations

At the beginning of this Section the effect of the peak-to-peak pressure pulsation on the pipework was discussed. The pressure pulsation creates an axial force which shakes the pipework. Some shaking force is allowable as the inertia of the pipework plus the restraining forces of the supports restrict the pipe movement.

Figure 11.7 indicates acceptable peak-to-peak pulsation levels as a function of the mean process pressure. These values are based on pipework mechanics only. The process or instrumentation connected to the pipework may require lower pulsation levels. Pressure pulsations in the pump suction pipework may also require lower levels. Pressure pulsations in the pump suction pipework reduce the NPSHa/NPIPa, this must be considered when deciding upon acceptable levels.

The pressure pulsation radiated by a reciprocating pump is a complex signal which includes all the integer harmonics from 1 · r/sec and greater. The power of the signal is in the lower harmonics, usually starting at r/sec x number of plungers. The pressure pulsation can cause lateral vibration of the pipework, and resonance if the natural frequency of the pipe span is very close to one of the integer harmonics.

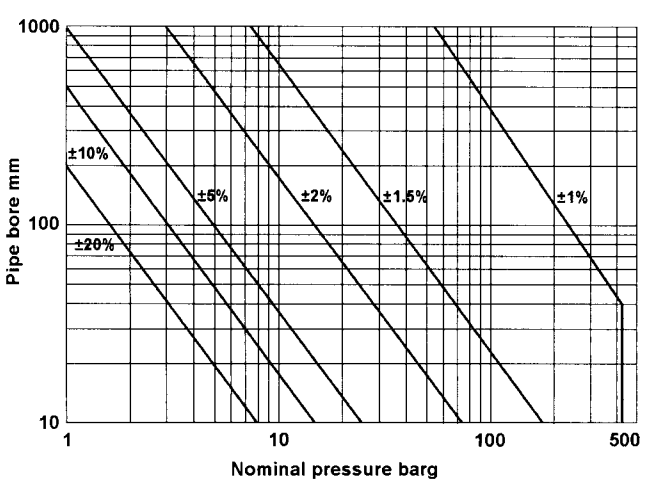

Figure 11.7 Acceptable peak-to-peak pressure pulsations for pipework

It is also possible to achieve acoustic resonance. A pipework system can be tuned to various frequencies due to the pipe length and the arrangement of branches and other connections. If one of the pipework acoustic frequencies is very close to a pump integer harmonic very serious vibration problems may arise. The magnitude of the problem is dependent upon the operating conditions and the potential resonant frequency.

11.8.5 Computer simulation

System mechanical and acoustic resonance can be predicted by computer simulation. The complete system must be analysed. The discharge system cannot be analysed without the suction system and vice versa. Complete and accurate piping isometrics must be available for analysis. There is little point in analysing one system and building another. Analysis can either be analogue or digital. Very few companies had analogue computers. Those who did, accrued a huge amount of practical experience, firstly on compressors, then pumps.

The analogue method has largely been replaced by digital computer studies. There are a few more companies in this field now. Not all of these have much experience! or expertise!! Not all companies perform the simulations the same way. Insist on very detailed descriptions of simulations proposed. All companies will show thick finished reports including masses of data which is incomprehensible. Look for one which can explain things in understandable terms.

The following points should be raised with any prospective simulation contractor:

- Can the simulation model show pump run-up and run-down conditions?
- Can the model process transient conditions?
- Can all types of pulsation damper be modelled?
- How easy is it to change parameters to evaluate modifications?
- Can the interaction between multiple pumps be modelled?

Simulations for a single pump system are very expensive. The analysis cost must be judged against the pump unit cost and the criticality of the service.

It is not possible to give generalised advice on when simulations should be performed but it is possible to state some obvious facts.

- Pressure pulsations are largely attenuated by liquid viscous effects.
- Pulsations will radiate further in low viscosity systems than in high viscosity.
- Pumps running fast, both r/min and m/s, will produce worse pulsations than pumps running slow.
- Pipework with poor supports will vibrate more easily than properly supported pipework.
- It is much better to have pipework for reciprocating pumps at ground level securely attached to concrete.
- Piping systems running at high liquid velocities will tend to give more problems than low velocity systems.

If it is difficult to decide whether a simulation should be performed seek independent advice. Good advice can only given after reviewing all the information; this is the information that would be supplied to allow the simulation to be performed.

LIBERTY EXHIBIT 1034, Page 318
This book belongs to Robert Durham (rdurham@thewaylabs.com)
Copyright Elsevier 2024

11.9 Instrumentation

11.9.1 Integrated control and diagnostics

Many pump suppliers have developed standard packages, complete with instrumentation and starting equipment, for popular applications. These include:

- Twin circulating pump packages for commercial and industrial heating
- Pressure maintaining packages for closed systems
- Trailer-mounted engine driven site pumps
- Dosing pump packages complete with suction tank

The ultimate in packaging is to be found among high pressure cleaner suppliers. Pumps are packaged in floor-mounted coin-operated booths for garages, on two and four wheel trailers, and truck-mounted for complete portability.

Pump packages which are built to the user's specifications can incorporate almost anything. As pump motor sizes increase the motor starters are generally not included in the package but are housed remotely in motor control centres. The pump package would include control logic and local operating functions.

Typical equipment found in local control panels is:

- Pump start/stop buttons
- Hand/off/auto switches
- Lag/lead switches
- Indicator lamps
- Hours run counters
- Ammeters
- Fault/trip annunciators

11.9.2 Annunciators

Annunciators provide visual indications which reveal specific messages. Not all the messages relate to faults or trips; it is possible to indicate normal functions. The annunciator is fitted with a test button to check all indicators are functioning. Most annunciators have connections to allow remote signalling of fault and trip conditions. In automatic packages , a wide range of annunciator message information is displayed, see Table 11.3.

Annunciator message
Pump 1 running
Pump 2 running
Pump 1 tripped
Pump 2 tripped
Low suction pressure
Low low suction pressure
High discharge pressure
High high discharge pressure

Table 11.3 Typical annunciator messages

When a pump motor trips the annunciator does not know the reason; the annunciator receives a signal from the motor starter to notify that the contactor has opened when it should have closed. The operator must go to the motor control centre to look at the motor starter. Motor control centres are now very sophisticated and a group of motor starters may have something equivalent to an annunciator which indicates a wider range of motor faults.

Operating conditions designated "low" or "high" are fault or alarm conditions. The annunciator flashes the relevant lamp and sounds an audible signal. The alarm function is to warn operators that some operating condition is outside normal limits and should be investigated and corrective action taken. The pump continues to operate. "Low low" and "high high" are trip conditions, indicating something has switched off. If, after the alarm signal, corrective action was not or could not be taken and the operating condition deteriorates, the control system takes over and shuts down the equipment. At the alarm condition, the control system can be designed to start stand-by equipment when this is fitted.

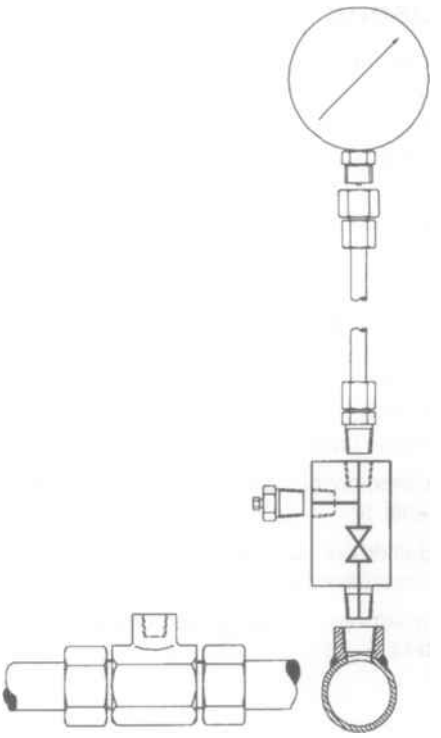

Figure 11.8 Pressure gauge for hazardous liquid

Latest control systems, using PLCs, can manage very complicated systems. The use of PLCs allows transducers to replace switches. A transducer can monitor the rate of change of a parameter and take pre-emptive action rather than wait for the parameter to reach a prescribed limit.

11.9.3 Connection to process pipework

One important aspect of instrumentation which is sometimes not specified is how instruments should be connected to process pipework. This part of detail design becomes more important when the process liquid is hazardous. In some cases the user should specify that no screwed connections are permissible for sealing process liquids. Compression fittings, flanges and other connectors must be used. Valves are used to isolate instruments from the process to allow servicing and calibration. Bleed, vent and drain valves may also be required. For liquids such as water and lube oil, bleed and vent plugs could be acceptable, but not for propane.

For example, Figure 11.8 shows how a pressure gauge should be connected to a hazardous liquid system. The user must be fully aware of the hazards posed by the process liquid. These hazards must be discussed with the pump supplier to allow appropriate designs to be considered.

When pressure switches are fitted, a pressure gauge should also be included so that local operators can see the normal pressure and report on trends. If multiple switches are fitted, for separate alarm and trip functions, they must be connected to the same point on the process pipe.

Although the latest electronic instruments allow much more sophisticated control of pumps and equipment; qualified, experienced maintenance staff must be on hand to look after the equipment if high costs are not to be incurred using the supplier's personnel on site.

LIBERTY EXHIBIT 1034, Page 319
This book belongs to Robert Durham (rdurham@thewaylabs.com)
Copyright Elsevier 2024

11.10 Useful references

ISO 1102 Commercial road vehicles - 50 mm drawbar eye - Interchangeability

ISO 1185 Road vehicles - Connectors for the electrical connection of towing and towed vehicles - 7-pole connector type 24 N (normal) for vehicles with 24 V nominal supply voltage

ISO 3731 Road vehicles - Connectors for the electrical connection of towing and towed vehicles - 7-pole connector type 24 S (supplementary) for vehicles with 24 V nominal supply voltage.

ISO 4141-1 Road vehicles - Multi-core connecting cables - Part 1: Test methods and requirements for basic performance sheathed cables.

ISO 8703 Road vehicles - Caravans and light trailers - Control device for inertia braking - Calculation of forces

ISO 8755 Commercial road vehicles - 40 mm drawbar eye – Interchangeability.

ISO 4183 Belt drives - Classical and narrow V-belts - Grooved pulleys (system based on datum width).

ISO 4184 Belt drives - Classical and narrow V-belts - Lengths in datum system.

ANSI/API 613 Special Purpose Gear Units for Petroleum, Chemical and Gas Industry Services.

API 677 General Purpose Gear Units for Petroleum, Chemical and Gas Industry Services.

API 614 Lubrication Shaft-Sealing and Control-Oil Systems for Special-Purpose Applications.

ANSI/AGMA 2001-D04 Fundamental Rating Factors and Calculation Methods for Involute Spur and Helical Gear Teeth.

DIN 3990-21 Calculation of load capacity of cylindrical gears; application standard for high speed gears and gears of similar requirement.

ISO/TR 13593:1999 Enclosed gear drives for industrial applications. See also ISO/TR 13593:1999/Cor 1:2005.

AGMA 913-A98 Method for Specifying the Geometry of Spur and Helical Gears.

AGMA, 500 Montgomery Street, Suite 350, Alexandria, VA 22314-1581 USA, Tel: 703 6840211, Fax: 703 684 0242, www.agma.org.

LIBERTY EXHIBIT 1034, Page 320

This book belongs to Robert Durham (rdurham@thewaylabs.com)

Copyright Elsevier 2024

Quality, inspection and testing 12

12.1 Introduction
12.1.1 Physical properties
12.1.1.1 Ultimate strength
12.1.1.2 Limit of proportionality
12.1.1.3 Elongation
12.1.1.4 Reduction in area
12.1.1.5 Hardness
12.1.1.6 Impact strength
12.1.1.7 Fatigue strength
12.1.1.8 Creep resistance
12.1.2 Heat treatment
12.1.3 Chemical composition
12.1.4 Corrosion resistance
12.1.5 Non-destructive testing
12.1.5.1 Radiographic inspection
12.1.5.2 Ultrasonic inspection
12.1.5.3 Dye penetrant inspection
12.1.5.4 Magnetic particle inspection
12.1.6 Repairs
12.1.7 Welding
12.1.8 Inspection
12.1.9 Assembly
12.1.10 Packaging
12.1.11 Pressure testing
12.1.12 Running tests
12.1.13 Painting
12.1.14 Purchased equipment
12.1.15 Functional testing
12.1.16 Witnessing
12.1.17 Clarification of specifications
12.1.18 Certification
12.1.19 Documentation
12.2 Mass-produced pumps
12.3 Custom-built pumps
12.4 Guidelines for documentation
12.4.1 Rotodynamic pumps
12.4.2 Positive displacement pumps
Reciprocating positive displacement pumps
12.5 Useful references

LIBERTY EXHIBIT 1034, Page 321
This book belongs to Robert Durham (rdurham@thewaylabs.com)
Copyright Elsevier 2024

12.1 Introduction

Most pumps have the important components manufactured from metal, of which cast iron, carbon steel and stainless steel are the most common. Cast iron forms the basis of all steel products; even though some new steels are made from scrap steel. Iron ore can be converted to iron by three methods:

- blast furnace
- sintering or pelletised/blast furnace
- direct reduction

In a blast furnace, iron ore reacts with hot coke to produce pig iron. The sintering or pelletising process prior to the blast furnace operation is added to allow blending of iron ores and also to control the size of the blast furnace feed. Sintering or pelletising improves the blast furnace operation and reduces energy consumption. Direct reduction produces sponge iron from iron ore pellets by using natural gas. Most iron is produced from sintered iron ore and coke. The steel maker controls the sintering process to produce a consistent iron quality.

Modern blast furnaces are capable of providing, together with computer modelling, in-process control. Iron is taken from the blast furnace as finished material for iron foundries. Iron is transferred to the oxygen steel process for conversion to various grades of steel. Iron from direct reduction plants is mixed with scrap steel in an electric arc furnace to produce various grades of steel.

The pump design engineer is not generally concerned which production method is used. For some alloy steels, used for some arduous applications, the designer may specify vacuum remelted steel for reduced impurities or may require additives to promote fine grain structure. Principally the design engineer looks at the physical properties of the material to judge suitability.

Standard tests are applied, solely to assess compliance with the published specifications. Some materials are characterized only by their physical properties or chemical composition, others by both. Grey cast iron is specified by its physical properties. Some low grades of carbon steel are specified by their chemical composition, no physical properties are necessary. Most materials are described by both.

For the following physical properties defined in Section 12.1.1, standard test pieces are stretched in a machine which simultaneously measures the increase in length and the applied load. There are several different test piece sizes which give slightly different results. One standard test piece is very small, this fits a machine called a Hounsfield Tensometer. Very small test pieces are useful when samples must be taken from castings or finished parts.

12.1.1 Physical properties

The mechanical properties referred to in Sections 12.1.1.1 to 12.1.1.6, are a function of the grain direction of the material. Unless specified otherwise all properties relate to the longitudinal direction. Properties in the transverse direction and through direction may be lower depending upon the physical treatment of the material and its grain structure.

12.1.1.1 Ultimate strength

This is the strength of the material when it fractures. See Chapter 7, Section 7.2 for typical values.

12.1.1.2 Limit of proportionality

This is the strength of the material when the relationship between stress and strain ceases to be linear. In low carbon steel this is classified as the yield point, the onset of plastic deformation, the material does not return to its original length when the load is removed. Most designs do not stress materials beyond the limit of proportionality.

12.1.1.3 Elongation

How much the material has increased in length when it fractured, known as elongation. Different test pieces have different gauge lengths, each gauge length gives a slightly different result. Good elongation properties, 15 to 20%, are required for complex components which are highly stressed. Good elongation indicates ductility. Ductility is necessary so that components can deform very slightly to spread the load. A good cast iron may be 4%.

12.1.1.4 Reduction in area

Ductile materials "thin" slightly as they are stretched. When the material fractures, the cross-sectional area of the fracture is less than the original test piece. Reduction in area is reported in most American standards but not used very much in Europe.

12.1.1.5 Hardness

Hardness is the ability of the material to withstand surface indentation. No special test piece is required, raw material and finished parts can be tested. Several scales of hardness are used; Brinell Hardness Number, Vickers Pyramid Hardness and Rockwell. Approximate conversions are available between scales. In carbon steels, the hardness is directly related to the strength.

12.1.1.6 Impact strength

The ability of the material to withstand shock or impact is important. A special test piece is required to fit the test machine. Most materials lose impact strength as the temperature reduces. Depending upon the material, impact properties should be checked when operating below 0 °C. Two different tests are used which give different results, very approximate conversions are available. Charpy is the most popular, Izod is little used. A popular bench-mark for offshore equipment is 27 J at the design temperature. It is normal to check three test pieces.

12.1.1.7 Fatigue strength

All the tests defined so far can be performed fairly quickly; "test the pieces today, get the results tomorrow". Fatigue is different. A special test piece is either subjected to repeated tensile loads or repeated bending loads.

For repeated tensile loads, the test piece experiences cyclic loads from 0 to + value. A bending test piece is loaded from -value to +value. To find the endurance limit the test piece must not fail. A test piece will appear satisfactory if it lasts five million cycles, 5,000,000. If the machine runs at 3000 r/min this will take 1667 minutes, i.e. 28 hours. Of course, it will not be possible to guess the correct stress so several tests must be run.

Testing for fatigue in air is simple, testing for fatigue in contact with a specific liquid is more complicated. It is not usual for the fatigue strength of materials to be checked on a contract basis. For critical pumps, fatigue testing of finished components may be necessary. Most pump designs are not based on fatigue. Exceptions include components for reciprocating pumps. The manufacturer should state if the life of any component is limit by fatigue when running at the rated conditions.

Fatigue can be induced in components by the operating environment. Pumps which operate with start-stop or load-unload control can be prone to fatigue failures. If the control system does not provide a gradual change in flow/pressure/torque some components are likely to have very short lives.

12.1.1.8 Creep resistance

Creep is the permanent distortion of the material after being subjected to a stress for a long period of time. This is not normally a problem in pumps, although those built of GRP or PTFE may suffer at temperatures below 250 °C. It is however usually considered in steam and gas turbines, i.e. hot components. Creep testing is similar to fatigue testing but creep tests can last

LIBERTY EXHIBIT 1034, Page 322
This book belongs to Robert Durham (rdurham@thewaylabs.com)
Copyright Elsevier 2024

for years. Published research data is therefore often used when necessary.

12.1.2 Heat treatment

Many materials require heat treatment to achieve the correct condition or strength. Carbon steels are hardened and tempered to achieve high strength, usually at the expense of ductility. Austenitic stainless steels are stress-relieved, softened or solution-annealed to modify the physical or chemical properties. The final condition is usually confirmed by taking hardness readings. When components are heat treated to achieve specific physical properties a test piece is heat treated as well. The necessary physical tests are conducted on the test piece.

12.1.3 Chemical composition

When a metallic material is produced as a raw material, its chemical composition is checked. When cast iron is converted to carbon steel in the oxygen process, all the relevant elements are weighed before being put into the converter. Before the steel is poured, the chemical composition is checked. When the steel is poured a sample is cast. The sample is analysed and its chemical properties are the properties of the melt. Certificates will show the name of the steelmaker and the melt, cast or heat number.

The chemical composition may show elements which are not required by the specification. Low carbon steels may show traces of nickel, chromium and molybdenum. The trace elements are a welcome addition because they tend to enhance the physical properties of the material. Impurities such as sulphur and phosphorous, will be shown very accurately. The chemical composition of specific components, when necessary, can be traced back to the original melt.

On rare occasions, a sample will be taken from a component and analysed. Latest techniques only require very small samples. It is possible to analyse material without destroying it. Only a few techniques are available which can analyse material without removal from the component. No methods can detect carbon. However sufficient accuracy is present to differentiate between 304 and 316 stainless steel.

12.1.4 Corrosion resistance

Corrosion resistance of materials is judged by studying published research. Pump manufacturers carry out long term research on corrosion and develop materials to cope with specific problems. If a pump user wishes to pump a new liquid, of which previously no pump manufacturer has had experience, the user should conduct basic corrosion testing.

12.1.5 Non-destructive testing

Raw material, raw castings and completely finished components can be examined physically to determine the quality of certain aspects of the material. This type of examination falls into two categories:

- Surface inspection
- Interinal inspection

Surface inspection looks for discontinuities in the surface which could be detrimental to the service life of the component. Cracks in the surface create stress raisers which can lead to fatigue failures. Pinholes in the surface may indicate porosity.

Internal inspection can show the integrity of the material and identify any impurities, inclusions or voids in critical locations. Impurities, inclusions and voids detract from the cross-sectional area available for stressing and create stress raisers. Porosity can lead to problems of leakage.

When flaws are detected it has to be decided whether the flaw is serious, if it can be repaired or whether it **should** be repaired. Some national standards, particularly pressure vessel standards, have categories for defects. The manufacturer's requirements may be more or less stringent than published standards. If the flaw is in raw material, a casting or piece of plate, it may be more cost-effective to scrap it rather than expend more time and money on repairs. If the flaw is in a semi-finished piece there may be more incentive to repair. If the flaw is in a finished component there will no doubt be compelling financial reasons for a repair.

12.1.5.1 Radiographic inspection

Radiography, X-ray, is accepted as the highest grade of internal inspection and the most costly. Radiography is good because a permanent record of the inspection is available at any time for review. It is used mostly for welds but also for critical areas in castings. Components can be taken to fixed x-ray equipment. Large components or assemblies are radiographed using radioactive isotopes. Strict safety precautions must be enforced.

12.1.5.2 Ultrasonic inspection

Ultrasonic inspection is popular because it can be conducted with portable equipment. The visual display indicates the position of flaws in respect to the thickness of the material. The size of the flaw must be assessed by an experienced operator. This technique is very good for inspecting large flat plates prior to fabrication or forgings.

12.1.5.3 Dye penetrant inspection

Dye penetration, or "dye pen" is a surface inspection method which is ideal for finding pinholes and hairline cracks. The surface is first sprayed with dye which is allowed to soak into any surface defects. After a specified time, the dye is washed off and the component cleaned. Chalk is finally sprayed onto the surface. If surface defects exist, the dye trapped in the defect is drawn into the chalk by capillary action. Defects are outlined by dye indications in the chalk. The technique is generally used on finished machined surfaces. A skilled operator can judge the depth of the defect by the size of the "bleed-out".

Dye penetration is particularly useful on welds and surface coatings. Weld integrity is degraded significantly by the presence of surface imperfections. It can indicate if a surface coating has achieved complete coverage without porosity, pinholes or cracks and works on non-metallic coatings as well as metallic.

12.1.5.4 Magnetic particle inspection

Magnetic particle, or "mag particle" is a surface inspection method which is popular for cast materials. This inspection can only be conducted on materials which can be magnetised by an electric current. The surface is coated with a liquid bearing small magnetic particles. If the surface contains flaws, the magnetic flux is concentrated around them, drawing the magnetic particles towards the flaw.

12.1.6 Repairs

When repairs are undertaken, usually by welding, the repair must be inspected. Initially the faulty material must be removed by any suitable means and then checked to ensure that all faulty material has been removed; this is normally by dye penetrant or magnetic particle. The repair is then carried out. The component must then be inspected by the same method which found the original flaw. Pumps built specifically for a purchaser may have repairs categorised into "major" and "minor".

12.1.7 Welding

Welding is a skilled occupation. There are many types of welding and the welder undertaking any particular job must be proficient at that type of welding. Welders are graded by the types of components they weld, the positions of the welds and by the types of equipment used. The welding of pipework is thought to be the most difficult type of welding, in particular welding pipework to pump casings.

LIBERTY EXHIBIT 1034, Page 323
This book belongs to Robert Durham (rdurham@thewaylabs.com)
Copyright Elsevier 2024

Welders for pressure vessels have to be qualified and is usually assessed by an insurance company. Designing weld methods for exotic materials requires very special materials knowledge. All welding for process liquid parts should be supported by certification.

12.1.8 Inspection

Inspection of all components is carried out as a matter of course. The degree of inspection is dependent upon the nature and function of the component and the batch size. Mass-produced parts are not scrutinised as closely or individually, as a small number of specially made parts. General dimensional inspection of parts does not normally form part of the purchaser's involvement. In special cases, the purchaser may wish to witness the measurement of specific dimensions.

12.1.9 Assembly

The key process of pump assembly is the final dimensional check. If components do not have the correct fit or clearance it will be very apparent. Selective assembly of components is frowned upon unless the components are always supplied as a sub-assembly. Spare parts cannot be selectively assembled on site. Assemblies may have fits, clearances and alignment measured and recorded before testing or dispatch. This record is sometimes called a "History Sheet".

12.1.10 Packaging

Packaging is the building of the pump and any associated equipment into a pump unit.

In Chapter 11 it was mentioned that a simple pump unit may be a pump and a baseplate and the purchaser supplies and mounts his own driver. At the other extreme, a pump unit may consist of several pumps and drivers with pipework and control equipment mounted on one baseplate or skid. When control equipment is supplied, the pump manufacturer is often required to wire all the control elements together.

If a control panel is mounted on the package then switches and transducers can be wired to the panel. If the control panel is mounted separately, the pump manufacturer will probably wire the package instrumentation to a terminal box. The purchaser's inspector or instrument engineer may wish to witness the wiring process. Some cable glands are complicated to assemble and wiring routes can be better assessed with a full size 3D package; wiring practices inside instruments and terminal boxes may be considered critical.

12.1.11 Pressure testing

Pressure testing of components and assemblies confirms the material integrity and the basic strength of the design. Porosity of castings can be detected easily without lengthy ultrasonic or costly radiographic inspections. Pressure testing does not always indicate the presence of thin walls. Whenever possible components should be pressure tested in a manner which closely represents the pressure effects during normal working. Clamping components in fixtures modifies their elastic behaviour and does not highlight problems such as distortion of mating flanges.

Pressure testing does not automatically mean hydrotesting with water. Some tests may be conducted with oil, others with a detergent and water mixture. Some components may be pressurised with compressed air and submerged in a water tank. Critical components for very hazardous liquids may be tested with helium.

The pressure to which components may be subjected can be limited by standard flange designs. The purchaser and the manufacturer must ensure that each fully understands the requirements and the limitations of pressure testing.

12.1.12 Running tests

Running tests are thought by some to be the ultimate quality control test. This may or may not be the case. Many types of test are possible. The following list has been proposed for positive displacement pumps.

It is only for fully-assembled pumps. Pump rotors fitted to test casings would not comply with the testing requirements.

(ISO has not prepared a suitable test standard for positive displacement pumps. It seems unlikely a good standard will be available in the near future.)

Confirmation test: A running test conducted to confirm the pump unit functions as required. No test measurements are made. The pump unit actually performs the specified functions. This type of test is limited to fully packaged equipment such as engine driven, trailer mounted pumps complete with suction and discharge hoses.

Performance test: A running test conducted to confirm the mechanical and volumetric efficiency and the mechanical soundness. The following test readings should be taken and recorded:

Inlet pressure, inlet temperature, outlet pressure, outlet flow, pump speed and pump power input or torque.

The number of sets of readings to be agreed by the manufacturer.

NOTE: Power input may be measured electrically at the input to a calibrated test motor or the contract motor when data on efficiency is supplied by the motor manufacturer. Driving torque may be measured directly or indirectly as a torque reaction when appropriate.

NPIP test: A running test conducted to confirm the NPIPr is less than the NPIPa. The purchaser and the supplier should agree the flow loss criterion to be used. All the readings required for a performance test should be recorded.

NOTE: An NPIP test is not part of a performance test and must be specified separately. Test rig modifications may be necessary which have cost and delivery implications.

MIP test: A running test conducted to confirm the Minimum Inlet Pressure is sufficient to support the rated operating conditions.

NOTE: MIP tests are conducted when NPIPr tests are inappropriate. NPIPr is based on the liquid vapour pressure. If the liquid vapour pressure is extremely low or the process liquid is a variable mixture of compounds NPIPr becomes an invalid criterion. The pump manufacturer will specify a suitable Minimum Inlet Pressure to ensure proper pump performance.

Linearity test: A running test conducted on dosing pumps to show that the variation in flow with stroke or speed adjustment conforms to a straight line relationship. All the readings required for a performance test should be recorded.

Repeatability test: A running test conducted on dosing pumps to show that the pump delivery is consistent for specific stroke or speed settings. All the readings required for a performance test should be recorded.

Steady state accuracy test: A running test performed on dosing pumps to show the precision of each dose under steady state operating conditions. All the readings required for a performance test should be recorded.

Gas handling test: A performance test conducted with specific volumes of gas entrained in the inlet pipework. All the readings required for a performance test should be recorded.

NOTE: This test should only be conducted after the normal performance test. This test can only produce useful results when the test is conducted at data sheet condi-

LIBERTY EXHIBIT 1034, Page 324
This book belongs to Robert Durham (rdurham@thewaylabs.com)
Copyright Elsevier 2024

tions with the data sheet liquid or a close approximation.

Self-priming test: Conducted to show that the pump can evacuate gas from the inlet pipe and draw liquid into the pump and operate normally without external intervention. The pump casing should be filled, according to the suppliers instructions, before the test.

Mass-produced self-priming pumps should be fitted with a standard inlet arrangement described by the supplier. Pumps tested for contract should be fitted with pipework to provide a similar gas volume to the site arrangement. When necessary, the static lift can be increased by applying a partial vacuum. All the readings required for a performance test should be recorded plus the time taken to evacuate the inlet.

Product data for mass-produced pumps should indicate all the test parameters including outlet pressure, liquid viscosity and temperature.

Mechanical run: A running test, at specified conditions, conducted to confirm mechanical soundness of the pump and any other auxiliary equipment. The following test data should be recorded:

inlet pressure

outlet pressure

pump speed

Site simulation test: An extended performance test where the pipework local to the pump replicates the site pipework. An NPIP test, if required, must be specified separately. All the readings required for a performance test should be recorded. The purchaser should not specify the requirement to run a site simulation test until details of site process pipework are available for the supplier's review.

Strip inspection: Involves a partial disassembly of agreed portions of the pump to confirm correct operation of components. Retest after strip inspection is not required unless a fault is detected.

String testing: A running test which involves all, or part, of the contract drive train and any other equipment within the suppliers scope. The full extent of the test, including all equipment, operating conditions, test readings and whether mounted on the baseplate/skid/trailer, must be agreed.

Endurance run: A running test which involves all, or part, of the contract equipment at specified operating conditions and is intended to confirm the reliability of the equipment. The purchaser and the supplier should agree the readings and frequency of readings to be taken and the total running time.

Relief valve operation testing: Involves increasing the pump outlet pressure until the relief starts to open, then further increasing the pressure until all the pump flow is relieved. The pressure is then reduced until the relief valve closes and seals. All the readings required for a performance test should be recorded. This test may be applied to integral and external relief valves.

NOTE: This test is only valid when the test liquid closely approximates the contract liquid.

Vibration testing: Involves measuring the vibration severity, rms velocity, at agreed locations under agreed operating conditions.

NOTE: With some pump types, particularly reciprocating pumps, vibration levels experienced on the test bed, when baseplates are not grouted in or pumps are supported by temporary mounts, will be higher than those under normal operation at site. Under these circumstances, vibration data can only be considered as informative and not representative of the final installation.

Pulsation measurement testing: Involves using pressure transducers and electronic instrumentation to measure the pressure pulsations, in inlet and/or outlet piping or within the pump cylinder or casing, over one or more cycles, during running tests. Pulsation measurement readings should be taken at agreed operating conditions.

NOTE: When pulsation measurements are made on the manufacturer's test bed using test pipework the results can only be considered as informative. Such test results cannot confirm or guarantee the pulsations at site.

Noise testing is not included in this list because noise testing is sometimes very difficult and is the subject of a complete proposed standard in its own right. Most pump manufacturers do not have quiet rooms and noise testing is conducted on the normal testbed, sometimes adjacent to the machine shop. Background noise tends to be a problem. If the pump is tested with a slave motor, rather than the contract motor, the slave motor noise must be isolated because it cannot be treated as part of the package noise. Most manufacturers can offer a noise survey; a noise test not complying with any standard but reporting the background noise at each test point with the test reading.

12.1.13 Painting

Painting is the last operation prior to dispatch. Some paint finishes, especially for offshore requirements, are quite complicated and have many intermediate stages. The purchaser's inspector may wish to witness some operations.

Paint specifications may require the raw material to be blast cleaned to a bright finish. The surface has obviously to be dry and free from loose fragments. Blast cleaning may have to be performed in a controlled atmosphere. Inspectors may need to check the environment and to see the surface before the primer is applied. Individual coats of some paint finishes have specified thickness and the inspector may wish to measure the paint thickness as coats are applied. The total paint thickness and the finish of the top coat will be the final inspection.

Some components are machined on all surfaces. Pump manufacturers may not wish to blast clean a surface which is machined for design purposes. Paint systems are available for applying to bright machined surfaces, the only pre-treatment being a thorough de-grease.

12.1.14 Purchased equipment

When the pump manufacturer packages a pump to form a pump unit, specifications and purchase orders will be issued for the purchased equipment. If the manufacturer is building his standard unit, all the specifications issued will be the pump manufacturer's. If the pump unit is built especially for a user, the user may impose requirements on the bought out equipment. It is possible that conflicts may arise between the two sets of specifications. The pump manufacturer is responsible for supplying a complete working package, irrespective of what the purchaser's specifications require.

12.1.15 Functional testing

Pump testing is complicated. Current standards do not address the problem of package testing, that is to say how much of the contract equipment is used for the test. Another part of testing which is not covered by specifications is the functional testing of packaged instrumentation and control equipment.

The following inspection functions are normal:

- Wiring continuity
- Earth and leakage tests
- Circuit verification
- Calibration of instruments

LIBERTY EXHIBIT 1034, Page 325
This book belongs to Robert Durham (rdurham@thewaylabs.com)
Copyright Elsevier 2024

- Verification of set points
- Simulation of control logic

If the purchaser wishes to exercise control over these activities then proprietary specifications must be issued.

12.1.16 Witnessing

The purchaser, or his representative or the certifying authority, may wish to watch certain activities. The certifying authority is usually an insurance company who wants to confirm that statutory requirements have been fulfilled.

The viewing of activities is approached in two ways:

- **Activities which are interesting or complicated may be observed**. The manufacturer informs the purchaser when the activity will take place, usually five to ten days notice is normal. The activity proceeds whether the purchaser is present or not.
- **Critical activities are witnessed**. The manufacturer informs the purchaser/certifying authority when the activity will take place. The activity cannot be performed if the inspector is not present. A hold is placed on that aspect of the contract. Both observing and witnessing is costly and takes time. The purchaser has no automatic rights to either. The full extent of external participation in inspection functions must be agreed during the pre-contract negotiations. Changes to external inspection, or the unavailability of inspectors at specific times can lead to extended deliveries and increased costs.

The purchaser may wish to observe/witness activities at the pump manufacturer's sub-suppliers. This can only be done with prior agreement. Also it is important for the purchaser and the pump manufacturer to agree who has to pay for any third party inspection or the certifying authority.

12.1.17 Clarification of specifications

Pump users who have a large population of pumps and who purchase many pumps every year, will have proprietary specifications covering most aspects of design, operation and maintenance.

The general trend is to take a national or international standard and amend certain clauses. Some clauses are deleted as being irrelevant, others are edited to reduce options and some options are modified to become mandatory requirements. When the published standard is thought to be weak, the proprietary version includes new and rewritten clauses.

In Chapter 11 it was stated that pump users can specify standards which are inappropriate for the application. A similar problem can arise with proprietary specifications. When this arises it is essential that the pump manufacturer has access to the purchaser's engineers who understand why specific clauses were written. The manufacturer must have the opportunity for technical discussions with engineers who can change or delete parts of the specification.

Many engineers involved in purchasing pumps do not fully understand the working principles of the pumps and associated equipment. They are therefore totally reliant on published standards and specifications. Such engineers cannot engage in meaningful technical discussions. Discussions are avoided by selecting equipment which fully complies with the nominated documentation. Under these circumstances the best equipment for the process may not be purchased. The purchaser is at the mercy of unscrupulous suppliers.

With modern business practices there is a great risk that the purchaser may buy the pump he specifies rather than buy the pump he needs. One way to visualise the consequences of this problem is the following edict:

> "Trouble-shooting is making the pump do what you specified. Making the pump do what you want is up-grading!"

The difference between troubleshooting and up-grading is — who pays for the work!

12.1.18 Certification

It is clear from the range of testing and inspection operations discussed that the scope for certification is immense. The cost and delivery implications cannot be overlooked. Table 12.1 lists, in the order of popularity, purchasers' favourite documentation.

Component/Assembly	Certification
Pump	Hydrotest Performance Material conformance Material physical Material chemical Material impact Welder qualification Weld procedures Vibration Noise
Pipework	Hydrotest Material physical Material chemical Welder qualifications Weld procedures Cleanliness
Motor	Hazardous area Type test Noise Performance Vibration

Table 12.1 Popular certificates

A material conformance certificate is a declaration from the manufacturer that the materials used comply with the specifications. Certificates of conformance which begin "I ..... certify that to the best of my knowledge....." are not acceptable.

When pumps are destined for cold climates, impacted-tested material becomes very important. Even baseplate material is certified. Pipework does not really suffer from impact certification problems. It is easier to use 304 or 316 stainless steel, for which many welders are qualified, rather than use a specialist nickel alloy.

As liquids become more hazardous and materials more exotic the requirements for non-destructive testing and operator qualifications increase.

Although the quality of the material has been discussed, what about the quality of the certification? When a material certificate specifies physical properties or chemical composition, how accurate is it, how valid is it and which authority certified it? The first standard to grade certification was DIN 50049. However, this was superseded by the DIN-adopted European Standard, EN 10204.

Certification is classified as follows:

2.1 **Certificate of Conformance**. The manufacturer certifies the materials conform to the order specification.

2.2 **Works Report**. The manufacturer certifies, on the basis of tests performed on the batch, the materials conform to the order specification. No actual certificates are supplied.

2.3 **Works Certificate**. The manufacturer certifies, on the basis of tests performed on the contract material, the materials conform to the order specification. No actual certificates are supplied.

3.1.A **Certificate issued by the manufacturer's Quality Control or Inspection Departments**; not someone

LIBERTY EXHIBIT 1034, Page 326
This book belongs to Robert Durham (rdurham@thewaylabs.com)
Copyright Elsevier 2024

from manufacturing, stating the test results of the actual material.

3.1.B Certificate issued by an independent test house, employed by the manufacturer, stating the test results of the actual material.

3.1.C Certificate issued by an independent test house, employed by the purchaser, stating the test results of the actual material.

Certification to 3.1.C is clearly the best from a pump purchaser's viewpoint. It is also the most costly and has the longest impact on delivery. On all but the most critical applications, certification to 3.1.B has become the standard for large pumps built to order. The purchaser's inspector can insist on positive material identification on random components to validate certification.

The pump manufacturer retains quality records for a considerable length of time, 20 years is not uncommon.

Manufacturer's quality could be considered as an extension of certification quality. But how much control does the manufacturer have over the manufacturing process ? This aspect of Quality Assurance is standardised in BS 5750, EN 29000, ISO 9000 and the United States ANSI/ASQC Q9000 series all describe the same set of quality principles.

The basis of manufacturing control is recognised as lying within strict operational instructions. Every employee has a written job description. Routine inspection and manufacturing procedures must be written down and strictly controlled.

All of these documents should form part of the manufacturer's Quality Assurance Manual, QAM. The manuals are issued to all relevant departments. Personnel are not allowed to keep individual copies of often-used procedures since these can become out-of-date and result in incorrect operations. Lines of communications are defined with critical decisions. Special emphasis is given to error reporting and feedback to the designer. Companies who advertise compliance with the standards have been audited by a third party. Routine inspections are performed at regular intervals to ensure standard compliance.

Compliance with the three standards mentioned is not essential for good manufacturing control. The basic principles can be incorporated into a manufacturing system without strict compliance with the standards. The critical items which are essential for effective control are a quality plan, for components or complete assemblies, and the power invested in the quality control department. Inspection at every stage of manufacturing is essential.

Total Quality Management is a phrase which is used by management to boost the image of companies. If quality plans are not used, if an independent department does not check components/assemblies at each stage of production, what does Total Quality Management have to offer the purchaser?

Quality Assurance is not intended as a means of achieving higher or better quality levels. Quality Assurance ensures goods are manufactured to the quality level specified and is intended to produce consistency. Well-regulated manufacturing systems will refine designs and manufacturing techniques as the fault reporting system highlights component or assembly failures; this is an essential cost reduction feature. Improvement in product quality is usually driven by the purchaser, directly or indirectly.

12.1.19 Documentation

All pumps and pump units will be supplied with some documentation. The extent of the documentation will depend upon the nature of the pump and the method of purchase. However, some documentation is controlled by legislation and the purchaser must receive this documentation irrespective of the method of purchase.

In Europe safety is controlled by the Machinery Directive which is implemented by compliance with standards. It is the duty of the pump designer to design safe pumps. If complete safety cannot be incorporated in the design, documents must be provided which detail the areas of concern and what precautions must be taken by the user. In general these will deal with the fitting of guards, protection against pressurised liquids and isolation of electric supplies prior to working on equipment. Other documentation the purchaser would reasonably expect to receive is discussed later.

Documentation can also apply to manufacturers' published literature. Typically manufacturers show performance curves and list materials of construction either by generic term e.g. carbon steel, stainless steel, bronze; or standard specification. Information that should be in publications to endorse the quality and reliability of the product is also discussed later.

12.2 Mass-produced pumps

Mass-produced pumps can be bought by two methods; "over-the-counter" and by enquiry. Many standard pumps are purchased "over-the-counter" from distributors. The use of distributors enables a manufacturer to have his products widely available at many outlets. Some distributors have technical knowledge and skills and can remove some of the skilled back-up required from the manufacturer. A purchaser can review published data, select a pump for an application and purchase a pump or unit over-the-counter. Alternatively, the purchaser can send the pump manufacturer or distributor an enquiry with the duty conditions. From the subsequent quotation, accompanied by standard literature, the purchaser can decide which pump to buy.

Before purchasing a pump or unit the following questions should be answered, either from reading the published data or direct questions to the distributor or manufacturer:

- Is the pump designed to a standard?
- Is the pump manufactured to a standard?
- Will my assembled pump be subjected to any running tests?

Some manufacturers do not test all pumps. If not all pumps are tested, how many pumps in a batch are tested and what is a typical batch size. What liquid is used ? Some manufacturers test rotating assembles in test casings rather than the contract casing. This does not fulfil the prime requirement of running tests, final assembly verification.

- Will my assembled pump be pressure tested?

If an assembled pump is pressure tested it is important to know the pressure and how the stuffing box was sealed.

- To what standard are running tests conducted?
- What is the tolerance band on the published data for head, flow, NPSHr/ NPIPr and efficiency?

Some unscrupulous manufacturers publish data which is the best possible attainable. Tolerances will all be negative. Some pump designs relying on moulded non-metallic materials may have unexpectedly wide tolerance bands on flow.

- What Quality Assurance documentation will be supplied with the pump or unit?

The minimum documentation would be a hydrotest certificate and a final inspection release certificate. For a standard pump constructed of 316 stainless steel or a more exotic alloy, it would be reasonable to expect a Works Report, 2.2 as in Section 12.1.18.

Other standard documentation would include:

- Parts lists and assembly drawings

LIBERTY EXHIBIT 1034, Page 327
This book belongs to Robert Durham (rdurham@thewaylabs.com)
Copyright Elsevier 2024

- Installation instructions and guide-lines
- Maintenance and safety instructions
- Trouble-shooting guide
- Telephone, fax number, e-mail and web site of service department

12.3 Custom-built pumps

When a pump is built to the purchaser's specification, the pump order will have been placed on the basis of quotations received from various manufacturers. The purchaser will have issued an enquiry detailing the operating conditions and any other requirements. The purchaser will have evaluated the quotations based on:

- Pump duty point and efficiency
- Compliance with specifications
- Manufacturing schedule and delivery
- Manufacturer's experience
- Confidence in manufacturer
- Documentation
- Cost

Cost is a difficult variable. If the quotation is evaluated by a contractor, initial cost plus a cursory look at the efficiency may suffice. A user will evaluate life-cycle costs. Documentation plays an important role in business and technical documentation plays a critical role in modern plants. The manufacturer should have listed all the documents which would form part of the technical contract. A Vendor Documentation Requirement form or VDR, should have been completed and returned. This form lists all the technical documents and at what time they will be submitted. A preliminary Quality Control Plan, QP, would have been submitted with the quotation to indicate the inspection included.

An important part of any quotation is a good installation list; this together with a good quality plan and a good VDR can instil confidence. A quality plan indicates the important inspection functions the manufacturer will conduct to ensure an acceptable quality level. The QP also shows the areas where control is taken from the Quality Control department, QC, and assumed by the manufacturer's Engineering department or the purchaser's inspector or engineer. In some contracts a Certifying Authority may also have inspection rights; the CA would normally be an insurance company. The QC department is always in overall control of any contract.

Some problems may be due to design rather than to manufacturing. If a pump casing fails hydrotest, and inspection confirms the machining to be correct, the problem will be referred to the Engineering department. Some components are critical, and any problems are also referred directly to Engineering. If the purchaser and the manufacturer have agreed to differentiate between minor and major repairs, major repairs will result in a purchaser's hold point. If the pump has difficulty in achieving the desired performance on test, both sets of engineers will be involved.

If the preliminary QP is not acceptable to the purchaser, the modifications must be agreed during the pre-contract negotiations. Extra certification and hold points not only affect the cost but also the delivery.

The Energy Industries Council, one of the leading UK trade association for UK companies supplying capital goods and services to the energy industries worldwide, considered the problem of QP's and issued a proposal, *Guideline for the generation of Quality Plans, QAG 01*. The proposal advocated a style of QP, on A4 paper, which could be word processed. The basic idea was to have each component on a separate sheet, organised in a specific format. Complicated components could have their quality requirements extending over several pages.

Table 12.2 indicates a slightly modified format which has been used very successfully. The references in the "Q.C. Procedure Reference" column — ES and WIM — refer to the manufacturer's standard inspection and workshop instructions. Inspection to national, European or international standards can be performed when appropriate. Components which are not listed in a QP are subject to the manufacturer's standard quality requirements. If the purchaser is considering placing an order, he may ask for a copy of the manufacturer's Quality Control Manual. This would normally be an "Uncontrolled Document". The prospective purchaser would not receive modified or new procedures as they were released.

When a contract is subject to such structured quality requirements, it is usual for the purchaser and the manufacturer to meet very early after the purchase order placement to clarify any ambiguous points and present a contract manufacturing schedule. This meeting, sometimes called a "Kick-off meeting" or a "Vendor co-ordination meeting" takes place between the manufacturer's engineers and contract management and the purchaser's engineers and inspectors. If a Certifying Authority is imposed, they must be represented so that their involvement and hold points are correctly interpreted. This meeting confirms the quality requirements and the documentation requirements shown on the VDR. The major and minor repair categories may be finalised on a component-by-component basis. The manu-

CYLINDER											
REF NO.	PROCESS DESCRIPTION OR Q.C. ACTIVITY	Q.C. PROC. REF	ACCEPTANCE CRITERIA			VERIFYING DOCUMENT	INSPECTION				CERTIFYING AUTHORITY
			IN HOUSE	CLIENT	ACTUAL		IN HOUSE		CLIENT		
							ENG	QC	INSP	ENG	
1	VERIFICATION OF MATERIAL COMPLIANCE	NITRONIC 50	CONFORMS TO SPEC.		EN 10204 3.1.B	CERT. OF MECH. & CHEMICAL PROPS.		H	X		
2	ULTRASONIC INSPECTION	ES 509-005	CONFORMS TO SPEC.			CERT. OF U.T. INSPECTION		H	X		
3	GOODS INWARD INSPECTION	ES 509-018	CONFORMS TO P.O. & SPEC.			INSPECTION CARD		R			
4	INSPECTION AFTER MACHINING	TO DRAWING	CONFORMS TO DRAWING			INSPECTION CARD		R			
5	INSPECTION/Q.A. REVIEW & RELEASE FOR ASSY	WIM 9-200-81	INSPECTION/QC REQMTS. COMPLETE			INSPECTION CARD		R			

H ≡ hold point or witness point R ≡ document retained at manufacturer's works X ≡ document included in purchaser's data pack

Table 12.2 Example of Quality Plan format for a component

LIBERTY EXHIBIT 1034, Page 328
This book belongs to Robert Durham (rdurham@thewaylabs.com)
Copyright Elsevier 2024

facturer may agree to submit progress reports during the contract.

As the contract progresses the manufacturer's contract engineer and the purchaser's inspector can work through the plan and ensure all inspections are completed and that documentation is available.

One important document, which is only used occasionally, is a design review. Pumps for very critical applications, very hazardous liquids or subject to legislative control, usually through a certifying authority, have important areas of design reviewed by a third party. This review is considered as an additional safety measure and would evaluate important areas of construction such as:

- Pump casing pressure stressing
- Effect of nozzle loads on casing stressing
- Shaft torsional and lateral vibration analysis
- Baseplate stressing

It is quite normal for small pressure vessels, seal pots and pulsation dampers, to have their pressure vessel calculations examined and approved.

The pump test is one of the most important aspects of the quality assurance programme. The preliminary Quality Plan with the quotation should have outlined the tests proposed and how they related to the rated operating conditions. The vendor co-ordination meeting should also have clarified any missing data.

Manufacturers' test facilities do have limitations and all rated operating conditions cannot be accommodated. Typical limitations are suction pressure, temperature and power. High suction pressure is difficult to provide, especially on large pumps. Rotodynamic pumps can be tested at the contract differential head at low suction pressure; the absorbed power will be very similar. Positive displacement pumps can be tested at the contract differential pressure or the contract discharge pressure if extra power is provided. Discussions with the manufacturer are essential.

Pumps routinely operate at temperatures over 250 °C. Manufacturers of large pumps will have difficulty sustaining such high temperatures. A compromise of a temperature around 100 °C may be possible. Modern pumps can be quite large, over 50 MW. Most manufacturers do not have power supplies to test such large pumps. Pumps up to 5 MW should not be a problem.

The choice of test liquid can cause formidable problems. Most popular rotodynamic pump test specifications call for water tests. Many process and chemical pumps operate with liquids of viscosities of up to 300 cSt. Centrifugal pumps operate at higher viscosities when running at low speeds. The liquid viscosity can have a positive effect on vibration levels and the criti-

12.4 Guidelines for documentation

12.4.1 Rotodynamic pumps

Speed r/min	Discharge press barg	Stages	Materials	Pump documentation									
				Pump assy hydro	Performance test	String test	Cert of conform	Casing material	Impeller material	Shaft material	Rubbing parts	Torsional analysis	Lateral analysis
≤ 3600	≤ 40	1	Cast iron casing/cast iron impeller Carbon steel casing/carbon steel impeller Bronze casing/bronze impeller	■	❒		2.1						
≤ 3600	≤ 100	1	Carbon steel casing/carbon steel impeller Bronze casing/bronze impeller	■	■		2.2						
≤ 3600	≤ 100	1	Stainless steel casing/stainless steel impeller	■	■			3.1.A	3.1.A		3.1.A		
> 3600	≤ 40	1	Any materials	■	W	W		3.1.A	3.1.A	3.1.A	3.1.A	n	n
> 3600	> 40	1	Any materials	W	W	W		3.1.B	3.1.B	3.1.B	3.1.A	n	n

n ≡ required r ≡ required if pump modified, i.e. impeller diameter changed W ≡ witnessed

Table 12.3 Documentation for single stage overhung pumps

Speed r/min	Discharge press barg	Stages	Materials	Pump documentation									
				Pump assy hydro	Performance test	String test	Cert of conform	Casing matrial	Impeller material	Shaft material	Rubbing parts material	Torsional analysis	Lateral analysis
≤ 3600	≤ 100	≤ 6	Cast iron casing/cast iron impeller Carbon steel casing/carbon steel impeller Bronze casing/bronze impeller	■	■		2.2						
≤ 3600	≤ 100	≤ 6	Stainless steel casing/stainless steel impeller	■	■		2.3						
3600 to 6000	≤ 100	≤ 6	Carbon steel casing/carbon steel impeller	■	W	W	2.3					■	■
3600 to 6000	≤ 100	≤ 6	Stainless steel casing/stainless steel impeller	■	W	W		3.1.B	3.1.B	3.1.B	2.3	■	■
> 6000	≤ 100	≤ 6	Any materials	■	W	W		3.1.B	3.1.B	3.1.B	3.1.B	■	■
≤ 3600	≤ 100	> 6	Carbon steel casing/cast iron impeller Carbon steel casing/carbon steel impeller	■	■		2.2			3.1.B	3.1.B		■
≤ 3600	> 100	> 6	Any materials	W	W			3.1.B	3.1.B	3.1.B	3.1.B	■	■
> 3600	> 100	> 6	Any materials	W	W	W		3.1.B	3.1.B	3.1.B	3.1.B	■	■

Table 12.4 Documentation for multi-stage pumps

LIBERTY EXHIBIT 1034, Page 329
This book belongs to Robert Durham (rdurham@thewaylabs.com) Copyright Elsevier 2024

cal speed. Testing on water can provide unrepresentative results and lead to a pump failing test. Differences between site performance and test performance must be clarified before any test procedures are agreed.

A good performance test is one which closely approximates the operating conditions. Some positive displacement pumps rely on viscosity to operate correctly so there would be no point in specifying water as the test liquid. The test liquid must be agreed with the manufacturer, but one closely approximating the properties of the process liquid would obviously be better than an arbitrary choice based on dogma.

Depending upon the equipment being supplied by the manufacturer, the actual test set up should be clarified. Will the pump be tested on the baseplate with the contract motor? Will the pump be tested on temporary supports and driven by a calibrated slave motor? Will the pump performance test be conducted as part of a string test with all the contract equipment available? This whole aspect of testing is not covered by current standards and not by the proposed ISO standard for rotodynamic or positive displacement pumps.

Larger, more complex pump units would normally have two volumes of documentation supplied with the equipment, an installation and maintenance manual, and a data book. The maintenance manual would contain all the information listed for standard pumps. A typical data book would contain:

Quality plan

Material certificates

12.4.2 Positive displacement pumps

Speed r/min	Discharge press barg	Power KW	Materials	Pump documentation									
				Pump assy hydro	Performance test	String test	Cert of conform	Casing material	Rotor material			Torsional analysis	Lateral analysis
≤ 250	≤ 50	≤ 10	Cast iron casing/cast iron rotor Carbon steel casing/cast iron rotor Carbon steel casing/carbon steel rotor Bronze casing/bronze rotor	n			2.1						
≤ 250	≤ 50	≤ 10	Stainless steel casing/stainless steel rotor	n			2.2						
≤ 250	≤ 160	≤ 10	Cast iron casing/cast iron rotor Carbon steel casing/cast iron rotor Carbon steel casing/carbon steel rotor Bronze casing/bronze rotor	n			2.2						
≤ 250	≤ 160	≤ 10	Stainless steel casing/stainless steel rotor	n			2.3						
≤ 250	> 160	≤ 10	Any materials	n	n			3.1.A					
≤ 250	≤ 50	≤ 100	Cast iron casing/cast iron rotor Carbon steel casing/cast iron rotor Carbon steel casing/carbon steel rotor Bronze casing/bronze rotor	n	n		2.2						
≤ 250	≤ 50	≤ 100	Stainless steel casing/stainless steel rotor	n	n			3.1.A					
≤ 250	≤ 160	≤ 100	Any materials	n	n			3.1.B	3.1.B				
≤ 250	> 160	≤ 100	Any materials	W	W			3.1.B	3.1.B				
≤ 250	> 160	> 100	Any materials	W	W	W		3.1.B	3.1.B				

Table 12.5 Documentation for rotary pumps
Torsional and lateral vibration analysis should be considered for powers over 30 kW when engines are used as drivers.

12.4.3 Reciprocating positive displacement pumps

Mean piston or plunger speed r/min	Discharge press barg	Power KW	Materials	Pump documentation									
				Pump assy hydro	Performance test	String test	Cert of conform	Crankshaft material	Liquid end material	Rubbing parts material		Torsional analysis	Lateral analysis
≤ 0.5	≤ 160	≤ 25	Any materials except stainless steel	n			2.1					(*)	
≤ 0.5	≤ 160	≤ 25	Stainless steel liquid end	n			2.2					(*)	
≤ 0.5	≤ 435	≤ 25	Any materials except stainless steel	n	■		2.1					(*)	
≤ 0.5	≤ 435	≤ 25	Stainless steel liquid end	n	■				3.1.A			(*)	
≤ 0.5	> 435	≤ 25	Any materials	n	■				3.1.B			(*)	
0.5 to 1.0	≤ 160	≤ 100	Any materials except stainless steel	n	■				3.1.A			(*)	
0.5 to 1.0	≤ 160	≤ 100	Stainless steel liquid end	n	■				3.1.A	2.1		(*)	
0.5 to 1.0	≤ 435	≤ 100	Any materials	n	■			3.1.A	3.1.B	3.1.A		(*)	
0.5 to 1.0	> 435	≤ 100	Any materials	W	■			3.1.A	3.1.B	3.1.B		(*)	
1.0 to 1.5	≤ 160	≤ 200	Any materials	W	■			3.1.A	3.1.B	3.1.B		(*)	
1.0 to 1.5	> 160	≤ 200	Any materials	W	W	W		3.1.A	3.1.B	3.1.B		(*)	
> 1.5	> 160	> 200	Any materials	W	W	W		3.1.B	3.1.B	3.1.B		(*)	

(*) A torsional analysis should be performed on all pumps driven by a reciprocating engine or reciprocating air motor except if a fluid coupling is used.
Table 12.6 Documentation for reciprocating pumps

LIBERTY EXHIBIT 1034, Page 330
This book belongs to Robert Durham (rdurham@thewaylabs.com)
Copyright Elsevier 2024

Weld procedures

Welder qualifications

Radiographs

Non-destructive test (NDT) reports

NDT operator qualifications

Hydrotest certificates

Pump test procedures

Pump test results

Motor certification

Motor test results

Instrument certification

Wiring check results

Functional test results

Paint procedure

Paint inspection certificate

Overall dimension and weight certificate

Inspector's release certificate

If the purchaser's inspector carries out random positive material identification, the material chemical composition certificate would be marked as such next to the inspector's stamp.

12.5 Useful references

Marchwood Laboratory, Dept. of Materials Engineering, Applied Science Building, University of Wales Swansea, Singleton Park, Swansea SA2 8PP Wales UK, Tel:01792 205864, www.swan.ac.uk/mateng/test/marchwood.

School of Engineering, Solid Mechanics Group, University of Surrey, Guildford, Surrey GU2 7XH, UK, Tel: 01483 259264, Fax: 01483 306039, www.surrey.ac.uk/MME/Research.

McMaster Steel Research Centre, McMaster University, Steel Research Laboratory, 1280 Main Street West, Hamilton, Ontario L8S 4L8 Canada, Tel: 905 525 9140, www.mcmasteel.mcmaster.ca.

Energy Industries Council, (EIC), Newcombe House, 45 Notting Hill Gate, London W11 3LQ UK, Tel: 020 7221 2043, Fax: 020 7221 8813, www.the-eic.com.

DIN 50049 Inspection Documents for the Delivery of Metallic Products – (Withdrawn, - Replaced by EN 10204).

BS 5750-8:1991 Quality systems. Guide to quality management and quality systems elements for services.

ISO 9000 Compendium 9th Edition 2001, International Standards for Quality Management.

ANSI/ASQC Q9000-1-1994 Quality Management and Quality Assurance Standards - Guidelines for Selection and Use.

ANSI/API STD 610 Centrifugal Pumps for Petroleum, Petrochemical and Natural Gas Industries, Tenth Edition 2004.

EN 1151:1999 Pumps. Rotodynamic pumps. Circulation pumps having an electrical effect not exceeding 200 W for heating installations and domestic hot water installations. Requirements, testing, marking.

BS 4617:1983 Methods for determining the performance of pumps and motors for hydraulic fluid power transmission.

ISO 4409:1986 Hydraulic fluid power - Positive displacement pumps, motors and integral transmissions - Determination of steady-state performance.

EN ISO9906:2000 Rotodynamic pumps. Hydraulic performance acceptance tests. Grades 1 and 2.

EN ISO5198:1999 Centrifugal, mixed flow and axial pumps. Code for hydraulic performance tests. Precision class.

EN ISO9001:2000 Quality management systems. Requirements.

ISO 4412-1:1991 Hydraulic fluid power — Test code for determination of airborne noise levels — Part 1: Pumps.

ISO 4412-2:1991 Hydraulic fluid power — Test code for determination of airborne noise levels — Part 2: Motors.

BS 5944-5:1985 Measurement of airborne noise from hydraulic fluid power systems and components. Simplified method of determining sound power levels from pumps using an anechoic chamber.

BS 5944-1:1992, ISO 4412-1:1991 Measurement of airborne noise from hydraulic fluid power systems and components. Method of test for pumps.

BS 5944-2:1992, ISO 4412-2:1991 Measurement of airborne noise from hydraulic fluid power systems and components. Method of test for motors.

BS 5944-6:1992, ISO 4412-3:1991 Measurement of airborne noise from hydraulic fluid power systems and components. Method of test for pumps using a parallel piped microphone array.

BS 6001-2:1993, ISO 2859-2:1985 Sampling procedures for inspection by attributes. Specification for sampling plans indexed by limiting quality (LQ) for isolated lot inspection.

BS 6002-4.1:1994, ISO 8423:1991 Sampling procedures for inspection by variables. Specification for sequential sampling plans for percent nonconforming. Known standard deviation.

BS 7201-1:1989 Hydraulic fluid power. Gas loaded accumulators. Specification for seamless steel accumulator bodies above 0.5 L water capacity.

BS 7250:1989, ISO 8426:1988 Methods of determining the derived capacity of hydraulic fluid power positive displacement pumps and motors.

ISO 8278:1986 Aerospace — Hydraulic, pressure compensated, variable delivery pumps — General requirements.

EN 287-1:2004 Qualification test of welders. Fusion welding. Steel.

EN ISO 9606-2:2004 Qualification test of welders. Fusion welding. Aluminium and aluminium alloys.

EN ISO 15607:2003 Specification and qualification of welding procedures for metallic materials. General rules.

EN ISO 15609-1:2004 Specification and qualification of welding procedures for metallic materials. Welding procedure specification. Arc welding.

EN ISO 15614-1:2004 Specification and qualification of welding procedures for metallic materials. Welding procedure test. Arc and gas welding of steels and arc welding of nickel and nickel alloys.

EN ISO 15614-2:2005 Specification and qualification of welding procedures for metallic materials. Welding procedure test. Arc welding of aluminium and its alloys.

EN 10045-1:1990 Charpy impact test on metallic materials. Test method (V- and U-notches).

EN 10204:2004 Metallic materials. Types of inspection documents.

ANSI/HI 1.6 (M104) Centrifugal Tests 2000, (For centrifugal, sealless centrifugal and regenerative turbine pumps of all industrial types except vertical multistage diffuser type and submersible pumps. Includes procedures on setup and conduct of hydrostatic and performance tests).

LIBERTY EXHIBIT 1034, Page 331

This book belongs to Robert Durham (rdurham@thewaylabs.com)

Copyright Elsevier 2024

ANSI/HI 6.1-6.5 (M113) American National Standard for Reciprocating Power Pumps for Nomenclature, Definitions, Applications, and Operation 2000.

ISO/CD 148-3 Metallic materials — Charpy pendulum impact test — Part 3: Preparation and characterization of Charpy V-notch test pieces for indirect verification of pendulum impact machines.

ISO 148-3:1998 Metallic materials — Charpy pendulum impact test — Part 3: Preparation and characterization of Charpy V reference test pieces for verification of test machines.

ISO 9906:1999 Rotodynamic pumps — Hydraulic performance acceptance tests — Grades 1 and 2.

ISO 5198:1987 Centrifugal, mixed flow and axial pumps — Code for hydraulic performance tests — Precision grade.

EN 626-2, EN 12162.

EN 12639, Liquid pumps and pump units - Noise test code - Grade 2 and 3 of accuracy.

EN 12296 Biotechnology - Equipment - Guidance on testing procedures for cleanability.

EN 12297 Biotechnology - Equipment - Guidance on testing procedures for sterilizability

EN 12298 Biotechnology - Equipment - Guidance on testing procedures for leak tightness.

IEC 1000-4-1, IEC 1000-4-2, IEC 1000-4-4, IEC 1000-4-5, IEC 1000-4-7, IEC 1000-4-8, IEC 1000-4-9, IEC 1000-4-10, IEC 1000-4-11, IEC 1000-4-12.

IEC 60034-2 Recommendations for rotating electrical machinery (excluding machines for traction vehicles) - Part 2: Determination of efficiency of electrical machinery.

IEC 60051 Recommendations for direct acting electrical measuring instruments and their accessories.

ISO 4288 Rules and procedures for the measurement of surface roughness using stylus instruments.

ISO 3274 Instruments for the measurement of surface roughness by the profile method - Contact (stylus) instruments of consecutive profile transformation - Contact profile meters.

EN ISO 5199 Centrifugal pumps - Technical requirements - Class II.

EN ISO 9908 Technical specifications for centrifugal pumps - Class III.

EN ISO 15783 Technical specification for sealless rotodynamic pumps - Class II.

IEC 1000-4-1, Electromagnetic compatibility (EMC) - Part 4: Testing and measurement techniques Section 1: Overview of immunity tests - Basic EMC publication.

IEC 1000-4-2, Electromagnetic compatibility (EMC) - Part 4: Testing and measurement techniques Section 2: Electrostatic discharge immunity test - Basic EMC publication.

IEC 1000-4-4, Electromagnetic compatibility (EMC) - Part 4: Testing and measurement techniques Section 4: Electrical fast transient/burst immunity test - Basic EMC publication.

IEC 1000-4-5, Electromagnetic compatibility (EMC) - Part 4: Testing and measurement techniques Section 5: Surge immunity test.

IEC 1000-4-7, Electromagnetic compatibility (EMC) - Part 4: Testing and measurement techniques Section 7: General guide on harmonics and interharmonics measurements and instrumentation, for power supply systems and equipment connected thereto.

IEC 1000-4-8, Electromagnetic compatibility (EMC) - Part 4: Testing and measurement techniques Section 8: Power frequency magnetic field immunity test - Basic EMC publication.

IEC 1000-4-9, Electromagnetic compatibility (EMC) - Part 4: Testing and measurement techniques Section 9: Pulse magnetic field immunity test - Basic EMC publication.

IEC 1000-4-10, Electromagnetic compatibility (EMC) - Part 4: Testing and measurement techniques Section 10: Damped oscillatory magnetic field immunity test - Basic EMC publication.

IEC 1000-4-11, Electromagnetic compatibility (EMC) - Part 4: Testing and measurement techniques Section 11: Voltage dips, short interruptions and voltage variations immunity tests.

IEC 1000-4-12, Electromagnetic compatibility (EMC) - Part 4: Testing and measurement techniques Section 12: Oscillatory waves immunity tests - Basic EMC publication.

MSS SP-55-2001 Quality Standard for Steel Castings for Valves, Flanges and Fittings and Other Piping Components - Visual Method for Evaluation of Surface Irregularities.

MSS SP-53-1999 (R2002) Quality Standard for Steel Castings and Forgings for Valves, Flanges and Fittings and Other Piping Components-Magnetic Particle Exam Method.

MSS SP-54-1999 (R2002) Quality Standard for Steel Castings for Valves, Flanges and Fittings and Other Piping Components - Radiographic Examination Method.

MSS SP-93-1999 (R2004) Quality Standard for Steel Castings and Forgings for Valves, Flanges, and Fittings and Other Piping Components - Liquid Penetrant Examination Method.

MSS SP-94-1999 (R2004) Quality Standard for Ferritic and Martensitic Steel Castings for Valves, Flanges, and Fittings and Other Piping Components - Ultrasonic Examination Method.

MSS SP-112-1999 R04 Quality Standard for Evaluation of Cast Surface Finishes - Visual and Tactile Method.

LIBERTY EXHIBIT 1034, Page 332
This book belongs to Robert Durham (rdurham@thewaylabs.com)
Copyright Elsevier 2024

Installation and maintenance 13

13.1 Installation
13.1.1 General
13.1.2 Ventilation
13.1.3 Noise and vibration
13.1.4 Siting
13.1.5 Baseplate and alignment
13.1.6 Separate pumps and motors
13.2 Foundations
13.3 Tanks and sumps
13.3.1 General
13.3.2 Submersible pumps
13.4 Pipe work and pipe systems
13.4.1 Valves in pipework
13.5 Care and maintenance
13.5.1 General considerations
13.5.2 Commissioning
13.5.3 Care of equipment
13.5.4 Preventative maintenance
13.5.5 Trouble-shooting guides
13.5.6 Stocking spare parts
13.6 Useful references

LIBERTY EXHIBIT 1034, Page 333
This book belongs to Robert Durham (rdurham@thewaylabs.com)
Copyright Elsevier 2024

13.1 Installation

13.1.1 General

The installation of pumps can be carried out by the pump manufacturer, the driver manufacturer or the contractor building the installation. Large pumps are usually installed as early as possible while access at site is at its best. Small pumps can usually be fitted in at any time. The pump should be ordered so that its delivery occurs at the correct time in the overall site programme.

The certified pump drawing must be available to allow foundations or structural steelwork to be designed and manufactured before the pump is delivered.

The space allocated for the pump must be sufficient to permit installation, care, disassembly and maintenance. Transport routes and lifting facilities must be available. Sufficient space must be available around the installed pump for the access of personnel. Operators may need to make frequent running adjustments. Maintenance personnel will require space to remove components and assemblies. Some pump designs require withdrawal space at the non-drive end. The motor may need space for the withdrawal of the rotor. The building or plot must have drainage facilities for leakage and priming and for liquids used for flushing sealing devices as well as water if used for quench. The risks of flooding the pump unit, in addition to the electrical and control systems, which can be very costly and time consuming to dry out, must also be taken into account.

The pump should be sited as low as possible in relation to the liquid level in the suction system and in a place permitting the shortest possible suction pipe with the minimum number of bends.

13.1.2 Ventilation

The ventilation of the pump site is very important. The electric motor of the pump must receive the necessary cooling. If hazardous liquids, harmful to the environment or highly flammable, are to be pumped, special ventilation requirements must be observed. It should be noted that the heat generated by the pump's electric motor can be considerable. The electrical and control systems for the pump must also be protected against damage.

13.1.3 Noise and vibration

Consideration must also be given to the noise caused by the pump, its motor and drive train. Considerable attention is being devoted to noise from pump units and their pipe systems, and special measures may have to be taken. To reduce vibration transmission, which may be further conveyed through the building structure, it may be necessary for the pump foundation and parts of the piping system to use isolation mountings.

Mounting the pump unit on isolation mountings can create piping and bearing problems. Piping close to the pump nozzle can fracture if the pump vibrates but the piping does not. This problem can be solved by using flexible pipes adjacent to the pump. Short bearing life can be a problem if the pump does move appreciably on its isolation mountings. It is better to use an isolated foundation block.

Acoustic enclosures may have to be erected around the pump unit. Permissible noise levels are often controlled by legal, safety and environmental requirements at places of work. In the case of noise exceeding 75 to 85 dB(A), specific measures must usually be taken. Staff can be protected by declaring a "Ear protection zone".

13.1.4 Siting

If the pump unit has been on site for some time, it may have been necessary to carry out some preventative maintenance. Shafts may have been turned to maintain an oil presence in the bearings or to prevent rolling bearings from "Brinelling". It is the user's responsibility to ensure the pump unit is stored in suitable conditions and that the factory preservation instructions have been followed.

On unpacking the pump unit it must be checked thoroughly for any damage which may have occurred in transit. Also check the packing list to ensure all parts are present. Some delicate instruments may have been removed and packed separately. If there is damage or shortages, the manufacturer must be informed immediately. If delicate parts have been packed separately, repack them temporarily. Remove any temporary bracing or locking clamps; replace parts as instructed by the manufacturer.

13.1.5 Baseplate and alignment

Before placing the pump on its foundation, thoroughly clean the top of the foundation, remove any thin ridges and roughen the top to provide a good key for the grout. Prepare enough shims to level the baseplate, two sets for each foundation bolt. The shims should be longer than the width of the bottom flange. A packer should be placed either side of each foundation bolt, about 20 to 35 mm thick. Remove coupling spacers or driving pins. Lift the pump over the foundation block and fit the foundation bolts into the baseplate holes before lowering onto the packers. Level the baseplate, by adding shims, using an accurate spirit level on the machined pads. Long baseplates may be fitted with targets for laser or optical alignment.

NOTE: It is the upper surfaces of the machined pads on the baseplate which are important for levelling. The underside of the baseplate is usually not machined and will not be exactly straight.

Horizontal pumps and motors are usually supplied complete and aligned on a common baseplate. (See Section 13.1.6 for separate pumps and motors.) Whether the pump has been tested or not, the pump and motor will have been accurately aligned prior to dispatch from the manufacturer's works. Check the coupling alignment, see Chapter 9, Section 9.11. Adjust the shimming until the coupling alignment is close, and consult the manual for thermal growth correction. Protect the tops of the foundation bolts and fit shuttering around the block in preparation for grouting. A good mixture for grout is one part of cement to two parts of sharp sand. The final consistency should be able to flow easily.

Pour the grout and ensure the top of the foundation is covered evenly. If full depth cross members are fitted, ensure complete support. If a cast iron baseplate is used, fill it completely. Remove the shuttering after two days, but allow the grout to harden for at least 10 days. Do not allow the grout to dry out too quickly, and protect it from direct sunlight. In hot environments it may be necessary to cover the grout with damp sacks. Also, protect the grout from frost if the temperature is low. Sacks, covered with polythene sheets will be adequate unless the temperature is very low.

Tighten up the foundation bolts and smear with grease. Check the coupling alignment, remember thermal growth corrections and adjust the shimming under the motor feet if necessary. Record all the alignment settings. Spacer couplings are not an excuse for poor alignment and diaphragm coupling life will be short with poor alignment. Pumps with Cardan shafts should have some radial misalignment, and the manufacturer's instructions should be followed.

The suction and discharge process pipework should be finalised after the grout has hardened and final alignment has been completed. The pipework must line up naturally with the pump connections. Do not force pipework into alignment. Remove the piping sections adjacent to the pump and clean out the pipework, as best as possible. Fit a temporary suction

LIBERTY EXHIBIT 1034, Page 334
This book belongs to Robert Durham (rdurham@thewaylabs.com)
Copyright Elsevier 2024

strainer when pipework is rebuilt. Recheck coupling alignment with recorded figures and modify the pipework if necessary.

Jog the driver, to check for correct rotation direction, before replacing coupling spacers or drive pins. It is important that coupling bolts are tightened with the correct torque and that the appropriate quality of bolt is used. Information on the subject should be obtained from the manufacturer's instruction book. Fit any loose equipment which was removed for transportation and wire up the unit, "locking-off" all local isolators.

13.1.6 Separate pumps and motors

Pumps driven by electric motors over 5 MW, or steam or gas turbines, will probably be delivered in two sections, pump and driver. Start with the largest section; level and grout in as described above. After the grout has hardened, align, level and grout in the second section. When the second section grout has hardened, then proceed with final alignment and assembly.

13.2 Foundations

With the exception of pumps directly incorporated into the piping, as well as some submersible pumps and site pumps fitted with skids or trailers, a pump requires a solid foundation. This may be of concrete or a steel structure. Standard pump baseplates are designed to be grouted to a continuous concrete foundation block. If the pump is to be installed on a steel structure, the pump manufacturer should be informed of the size and position of the steelwork. Baseplate modifications may be necessary.

It is the user's responsibility to provide adequate support for the pump unit. The size of a foundation block will depend upon the nature of the sub-soil and the magnitude of the vibrations produced by the pump. Increasing the mass of the foundation block will reduce the amplitude of radiated vibration. A block isolated by proprietary elastomer mats may be necessary. Structural steelwork will be much more flexible than a concrete foundation block. Consideration must be given to the natural frequency of the support structure.

Further, the foundation should be sufficiently high to enable the connection of pipes and to ensure adequate space for drain lines, oil drains from reservoirs and for the fitting and maintenance of filters in the pipework. The foundation block should be longer and wider than the baseplate to provide extra physical protection, from such items as forklift trucks and barrows.

Horizontal pumps are usually supplied with pump and motor mounted on a common baseplate of cast iron or fabricated steel, tested and aligned. Large pumps may be delivered with the driver separate from the pump package. It may be necessary to provide a split level foundation.

Vertical pumps with flange-mounted motors are supplied with a base or mounting plate, also tested and aligned. In the sizing of foundations attention must be paid to the relationship between the height of the pump and the surface of the base or mounting plate. For example, if the pump unit is divided, in such a way that the electric motor can be mounted above an overflow level, separate foundations must be designed for both the motor and the pump. Large vertical pumps can suffer from structural vibration problems. Sound foundation designs may help to alleviate such difficulties.

13.3 Tanks and sumps

13.3.1 General

Many pump installations have an open vessel, a tank or pump sump, from which the pump receives the liquid to be transported. Figure 13.1 illustrates different tank arrangements. The pump performance stated by the manufacturer is based on an uninterrupted flow to the pump inlet. Defective design of the

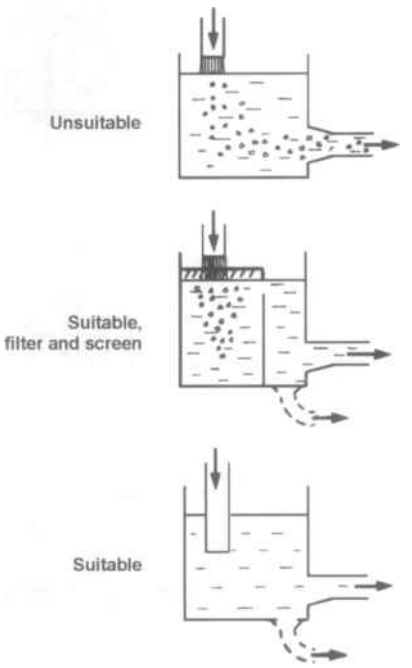

Figure 13.1 Pump suction tanks

pump sump or tank and suction pipe will result in inferior pump performance, possible damage and increased running costs.

The most common faults affecting the function of a pump due to defective suction design are:

- Entrainment of air
- Foam formation
- Uneven velocity distribution in the pump inlet
- Formation of undesirable turbulence
- Suction pressure too low, (insufficient NPSHa/NPIPa)

All these faults are dependent upon the properties of the process liquid and lead to different degrees of reduced pump performance and damage for various types of pumps. Viscous liquids and liquid-solid mixtures demand, as a rule, the utmost care in the design of the suction system of the pump installation.

To prevent the entrainment of air the end of any pipe filling a tank or sump should extend below the surface of the liquid. In

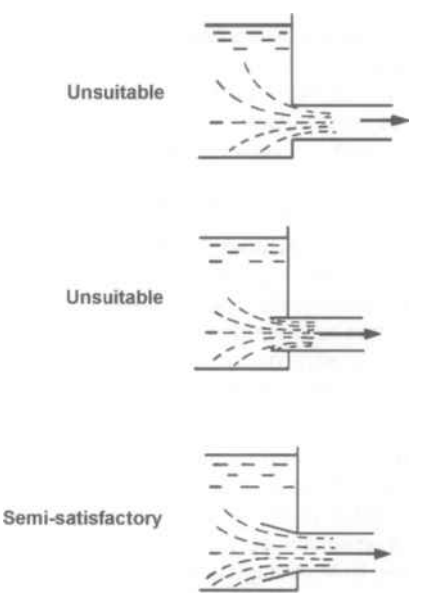

Figure 13.2 Unsuitable connections for suction pipes

LIBERTY EXHIBIT 1034, Page 335
This book belongs to Robert Durham (rdurham@thewaylabs.com)
Copyright Elsevier 2024

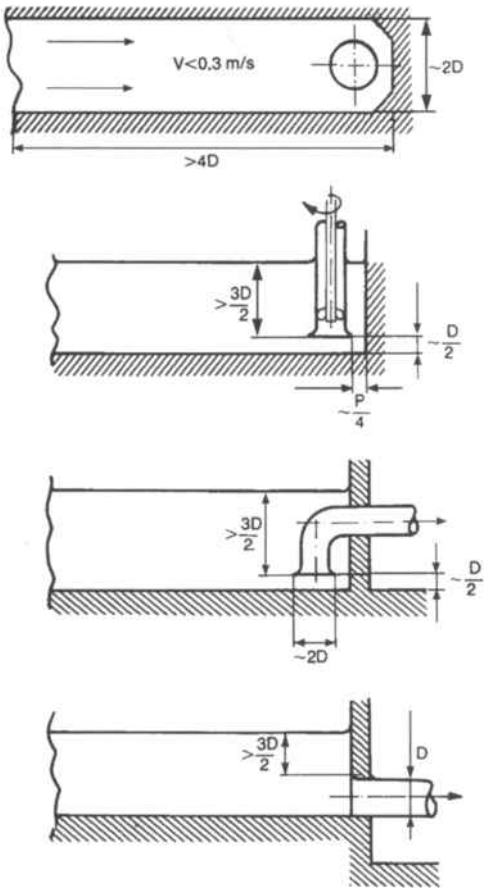

Figure 13.3 Recommended designs for the connection of suction pipes

certain cases, however, the pipe end must be located above the liquid surface.

The volume of the tank or pump sump represents a compromise between, on the one hand, economic factors associated with low initial cost for the plant and, on the other hand, technical criteria such as maximum permissible number of starts per hour in the case of on-off regulation or adequate retention time for degassing. An example of the effect of liquid properties in this respect, is the different rates of ascent of air-bubbles in oil and water.

The design of the pump sump or tank should be such as to ensure an even low flow velocity of the liquid. Local high velocities increase the risk of the formation of turbulence, vortexes and the associated problems of air entrainment. Areas of very low velocity have a tendency to collect particles which may be present in the liquid. However, this is not a serious problem. The local velocity cannot drop below the critical velocity so the flow area cannot be reduced progressively to zero. A sensitive place is the connection of the suction pipe to the tank. The risk of unfavourable flow conditions is considerable. Figures 13.2 and 13.3 illustrate examples of unsuitable and suitable designs.

Although the numerical values stated in Figure 13.3 refer to water and a single pump, the design of the connections are also applicable to other liquids. The unsuitable connections shown in Figure 13.2 can be converted to acceptable arrangements by reducing the velocity at the pipe entrance. Velocities for rotodynamic pumps should be less than 1.5 m/s and reciprocating pumps less than 0.3 m/s.

Low pressure at the pump suction connection, with consequent risk of cavitation damage, can be avoided by means of small losses in the suction pipe and restricted suction lift, see Chapter 4, Section 4.4 on suction performance. Whenever possible, the pump is placed to advantage below the level of the liquid in the suction tank, thereby permitting the liquid to flow down into the pump with positive head.

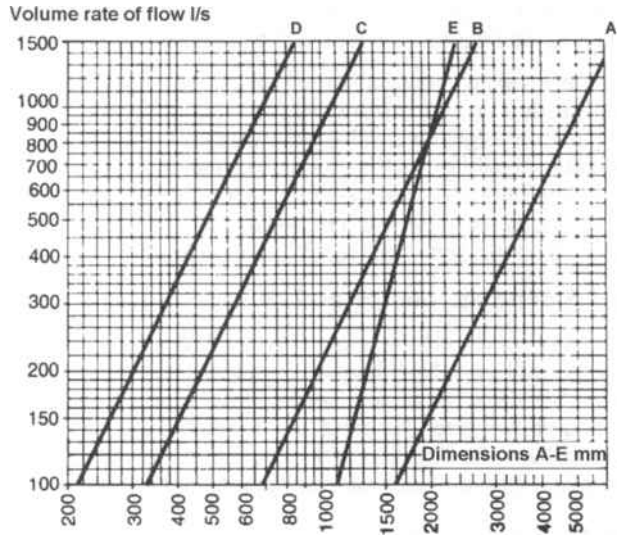

Figure 13.4 Nomogram for determining the dimensions of a pump sump

13.3.2 Submersible pumps

The following guidelines are applicable to pump sumps for sewage pumps with flows exceeding 100 to 200 l/s, i.e. for medium to large pumps. To a considerable extent these also apply to pump sumps for stormwater and rainwater. These pump sumps however, do not have problems with sewage sediment but rather with sand and soil.

A pump sump must have a sufficiently large volume to avoid too frequent starting and stopping of the pumps, otherwise there is a risk of the pump motors overheating. The problem of air being entrained into the water, the "waterfall" effect, arises if the inlet to the sump is located above the surface of the liquid. In such cases it is necessary to ensure that the pump sump is designed so that the water is degassed before it reaches the pumps. Otherwise there is a risk that the pumps will run unevenly, vibrate and even lose prime if the amount of air in the water is too great.

Vortexes are a problem which can also cause pumps to operate unevenly and create vibration. Often these eddies originate at the pump intakes and can be reinforced into a vortex if the pump sump is incorrectly designed. In the case of totally calm liquid surfaces it is necessary to have greater submersion depths to avoid eddies other than those required when the liquid surface is disturbed.

The inlet to the pump sump must be located in such a way that the flow of liquid to the pumps may be evenly distributed. If the flow in to the sump discharges immediately in front of a pump, there is considerable risk of disturbance to the pump intake. This can increase or reduce the power consumption of the motor at the same time as the capacity of the pump is changed. In extreme cases this can cause the motor protection system to be activated.

The formation of sludge and scum must also be borne in mind when designing a pump sump. It must be designed to prevent the formation of dead zones with stagnant water. Similarly it must be possible to pump away scum at regular intervals.

Pump sump volumes for on-off flow regulation are dealt with in detail in Chapter 6.

Four alternative solutions are given for pump sumps with different locations for inlets. The dimensions of the pump sump are calculated according to the flow per pump. The dimensions A to E for the different designs are determined by using the nomogram shown in Figure 13.4.

If the available height is restricted, the volume required is most easily obtained by increasing dimension A.

LIBERTY EXHIBIT 1034, Page 336
This book belongs to Robert Durham (rdurham@thewaylabs.com)
Copyright Elsevier 2024

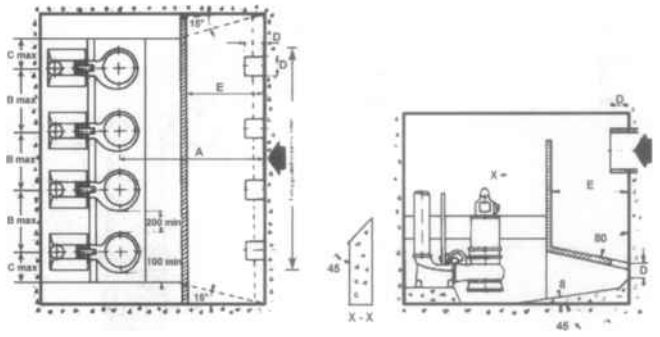

Figure 13.5 Alternative 1 — central, inline inlet at high level

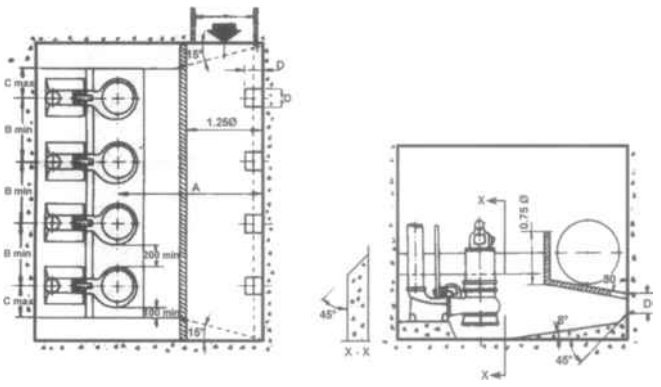

Figure 13.6 Alternative 2 — side inlet with inlet trough

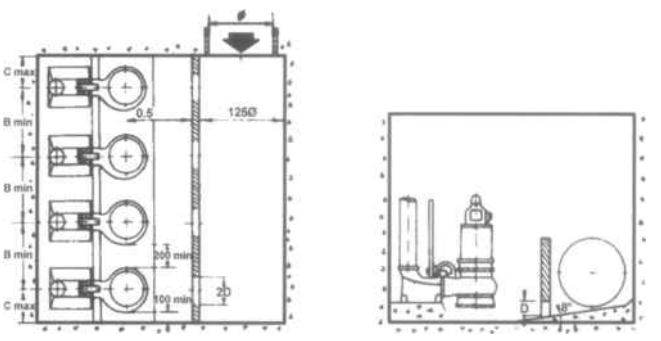

Figure 13.7 Alternative 3 — side bottom, inlet

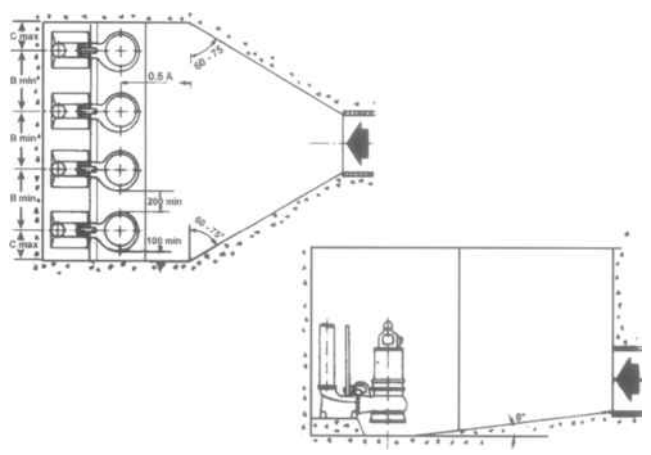

Figure 13.8 Alternative 4 — central inline inlet at low level

Note: Dimension B: The clearance between two pump casings should not be less than 200 mm.

Dimension C: The clearance between a side wall and pump casing must not be less than 150 mm.

Alternative 1

Central, inline inlet at high level, see Figure 13.5.

Due to the high location of the inlet, plenty of air is entrained into the incoming water. The sizing of the inlet trough allows time for the water to degas before it is led into the pump chamber through holes in the bottom of the trough. The side wall, section X-X, which is extended at least half way up the motor housing, prevents the formation of eddies between the outer pump and the side wall. The continual movement of the water means that the risk of sedimentation is minimal, provided that the minimum dimensions are not exceeded too greatly.

The trough wall immediately opposite the inlet must be high enough to catch the inflowing water. A weir can be arranged at the side so that floating waste can be removed by pumping.

Alternative 2

Side inlet with inlet trough, see Figure 13.6.

This is a variant of Alternative 1. The square openings in the inlet trough are necessary to spread the flow evenly through the entire sump and to allow time for degassing any air which may still become whipped into the incoming water. Compared to Alternative 1, the flow conditions in the pump chamber are somewhat more uneven and turbulent. The breadth of the inlet trough and the height of the baffle are calculated with respect to the diameter of the inlet, the former 1.25 x the diameter and the latter 0.75 x the diameter.

Alternative 3

Side bottom, inlet, see Figure 13.7.

A partition wall separates the pump sump from the inlet and forms a type of inlet chamber. From this chamber water flows through square openings with measurements 2D x D located immediately in front of every pump. The openings are dimensioned so that the flow velocity through them does not exceed 1 m/s. In this way the water is led without risk of eddies forming or of sedimentation at the pump intakes.

The partition wall should be at least high enough to reach a point on a level with half way up the pump motor housing. At the same time its height should not exceed a level situated a little below the highest starting level, thereby making possible the removal of floating waste by pumping. The breadth of the intake chamber should be 1.25 x the diameter of the inlet pipe, provided the maximum flow velocity in the inlet pipe does not exceed 3 m/s. The distance between the pump centre lines and the wall can be as little as 0.5 x A.

Alternative 4

Central inline inlet at low level, see Figure 13.8.

This is a simple and functional arrangement which gives a smooth turbulent-free flow to the pumps. The tapered inlet section should have an included angle of 30 to 60°. The distance between the pump centre lines and the end of the inlet section should not exceed 0.5 x A.

Figure 13.9 Recommended arrangement of low level inlet pipe

LIBERTY EXHIBIT 1034, Page 337
This book belongs to Robert Durham (rdurham@thewaylabs.com)
Copyright Elsevier 2024

Sometimes it is necessary to empty the inlet pipe completely. Alternatives 1 and 2 meet this requirement. In the case of Alternatives 3 and 4, connection may be made according to Figure 13.9. In the case of major flows, if this arrangement is not followed and the inlet pipe is allowed to discharge directly above the lowest stop level in the pump sump, air entrained due to the "waterfall" effect becomes a problem.

13.4 Pipework and pipe systems

Pumps with back-pull-out features, axially-split and radially-split pumps are designed so that rotating elements can be removed without disturbing the pipework. Not all pumps have these facilities. The pipework must be designed to accommodate the style of pump used and enable the pump unit to be dismantled without involving extensive work on the pipes. This may mean that spool pieces have to be incorporated in the pipe adjacent to the pump. It should be noted that it is very difficult to fit in a pipe section with flanges as well as gaskets unless it is possible to displace neighbouring sections. This problem is eliminated if a bend is removed.

The need for flexible and expansion joints to compensate for pipe movement and to accommodate pipe expansion in the event of changes in temperature must also be borne in mind. Necessary supports and mountings for the pipe must also be provided. The pump should not be considered as a pipe support or anchor. Considerable forces are released by flow surges and pressure pulsations in the case of rapid valve operation or during the starting and stopping of pumps, see Chapter 5. Figure 13.10 illustrates an example of normal mounting requirements of pipes adjacent to a pump. Notice that the suction pipe is larger than the pump suction connection. Pipes should be provided with rigid clamps at the supports.

When attaching pipes to the pump, care must be taken to ensure that they align correctly and do not impose stresses in the casing. Stresses of this kind can cause cracks in the pump casing. Also distortion can cause galling between the impeller and wear rings. Checking the coupling alignment before and after the pipes are fitted can quantify distortion produced by the pipes.

The pump suction pipe should be designed to rise or fall evenly with few bends. If a valve must be incorporated, it should be of a suitable type, see Section 13.4.1. If the pump is lifting on the suction then the suction pipe must be completely free of air leaks. Also the suction pipe must be designed without changes of section which could trap air pockets. Examples of correctly and incorrectly aligned suction pipes are shown in Figure 13.11.

Bends should not be fitted directly to the suction connection of the pump. This can lead to uneven loads resulting in both a deterioration in performance as well as abnormal axial loads. Figure 13.12 shows the worst case of this problem —a bend fitted close to the suction of a single stage double suction impeller. The bend disturbs the flow pattern which results in uneven flow distribution to the two sides of the impeller. This type of installation leads to short bearing life and vibration problems. With this type of pump bends close to the pump can only be in the vertical plane.

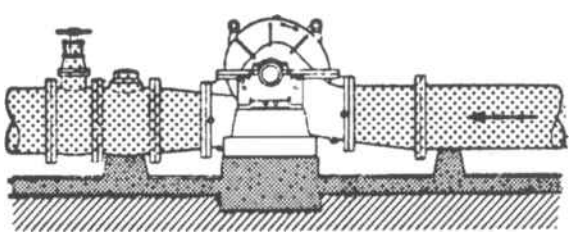

Figure 13.10 Correct mounting of suction and delivery pipes

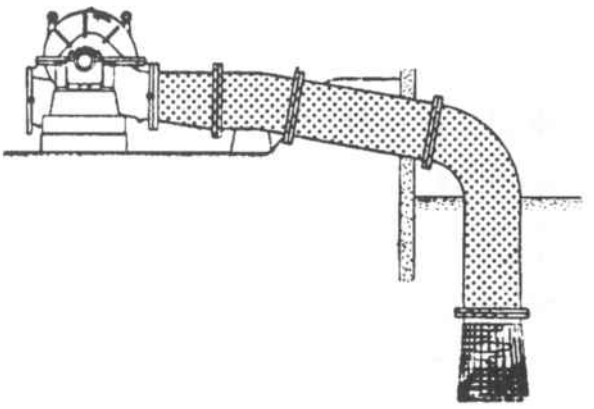

Correct routing of suction pipe

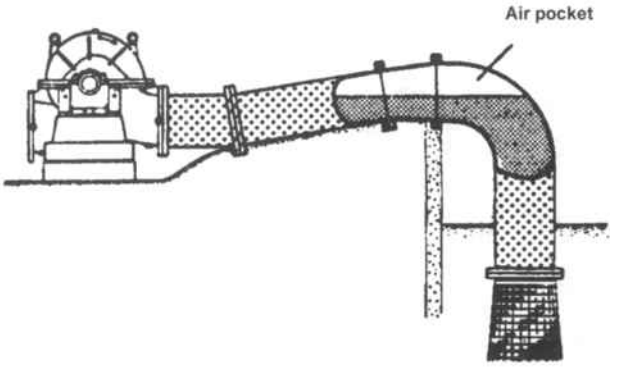

Incorrect routing of suction pipe

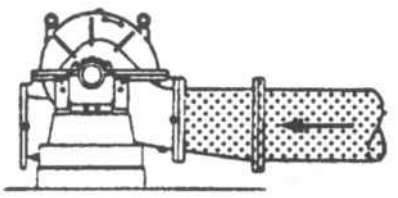

Correct installation with eccentric reducer

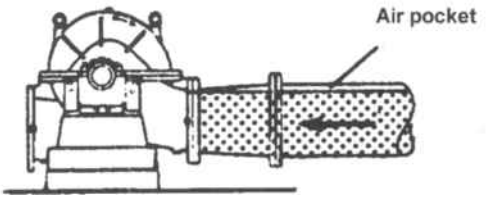

Formation of air pocket due to use of concentric reducer

Figure 13.11 Examples of correctly and incorrectly designed suction pipes

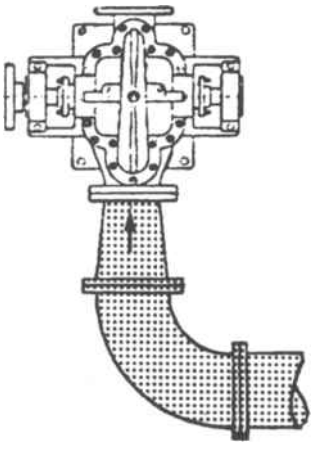

Figure 13.12 Incorrect installation of a bend close to a pump

LIBERTY EXHIBIT 1034, Page 338
This book belongs to Robert Durham (rdurham@thewaylabs.com)
Copyright Elsevier 2024

Chapter 3, Table 3.5 lists typical values for velocities in pipes. In multiple pump installations, pumps for one duty may be supplied by a header. The header should be larger in diameter than the branches supplying each pump and the header diameter maintained constant over the full length. Do not attempt to save costs by reducing the header diameter after pump branches. In theory this may be attractive, in practice it makes future plant modifications and expansion difficult.

Square tees in suction headers are difficult to assess for pressure losses. A full size swept tee, followed by an eccentric reducer, is preferable. In suction systems, "pulled" bends are more suitable than welded pressed bends. For reciprocating pumps, a full size swept 45° branch, followed by 3 x D of straight pipe and then a 45° set followed by the eccentric reducer has provided the best results. For reciprocating pumps, bends should be avoided in suction and discharge; pairs of 45° sets separated by 3 pipe diameters give much less pipework vibration.

Some textbooks suggest the fitting of bends to attenuate noise and vibration transmission by the liquid. This is a fallacy. Consider what the bends in a trumpet or French horn do to the noise! From a vibration point of view the best pipework design is straight; it is the bends which cause most problems.

Methods for calculating flow losses in pipe systems are given in Chapter 3. For the requirements of standards on pipework and installations see Chapter 17, Sections 17.1.3 to 17.1.8.

13.4.1 Valves in pipework

The pipework arrangement is very important for the reliability of continuous processes. Some equipment may be essential for start-up and shutdown. Consider how most pumps will be prepared for start-up. Valves must be strategically placed for venting and priming. Vent valves on the pump casing may be essential. If the liquid has to be lifted into the pump for priming, an ejector on the casing may be necessary rather than a vent valve. After shutdown the pump may have to be drained. Perhaps the process liquid is very corrosive and the pump should be flushed with a suitable liquid to reduce material loss. Perhaps the liquid is hazardous and the pump must be flushed before maintenance can be performed. Extra connections on the pump and/or pipework will be necessary. Plan for all modes of operation; not just the normal process operation.

Valves of various types will generally be installed in the pipe system associated with the pump. When choosing valves, allowance must be made for the pressure drop which always takes place. The difference in this respect between various types of valves intended for the same application can be considerable. Information on this subject should be requested from possible suppliers and evaluated, see also Chapter 5. Manually operated isolating valves with position indicators, e.g. with rising screw, are suitable for use when it is necessary to establish rapidly the position of the valve. In the case of larger sizes, geared valve types are necessary.

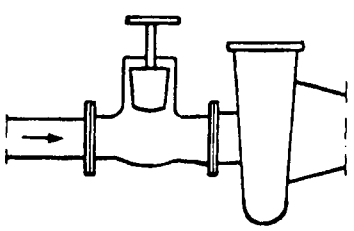

Gate valve, straight unimpeded flow

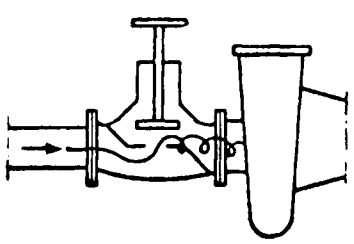

Globe valve, turbulence

Figure 13.13 Valves in suction pipes

Non-return valves of the flap type with external levers are often of practical use. In this way it is possible to achieve functional control as well as enabling the valve to open manually. The disadvantage is difficulty in efficiently sealing the shaft bushing to the external lever. Non-return valves should be provided with inspection covers so that the operation can be tested and flaps and balls replaced without dismantling the valve. If a non-return valve is required for the system, it should be located between the pump discharge connection and an isolating valve, so that it is not necessary to drain the delivery pipe when repairing the valve. When pumps are operating in parallel, the delivery pipe of every pump must have its own non-return valve so that one pump cannot pump backwards through another. In long piping systems it may be necessary to fit damped non-return valves, which cannot slam shut, to prevent or reduce pressure and flow surges.

When pneumatically or hydraulically operated valves are used, a special operating and control system is required. This can be relatively complicated. As a rule small electrically-controlled solenoid valves are used in such systems. It is usually necessary to insist on comparatively clean operating media in such cases to avoid the risk of blockages and subsequent functional defects. If pneumatic or hydraulic valves must close in the event of pump stoppage caused by an electrical power failure, the solenoid valves must fail "closed" and the operating medium must be independent of the electric circuit. This generally means the incorporation of an accumulator. Pneumatically and hydraulically operated valves must include adjustable orifices or needle valves in the fluid power circuits so the speed of valve closure can be adjusted.

Valves operated by electric motors are quite expensive, but allow very good regulation. Naturally they do not function in the event of a power failure.

If throttle regulation is applied by means of a valve, the throttle valve must always be located in the delivery pipe. Valves in the suction pipe must only be used for isolation. They should be of a type permitting unimpeded flow to ensure the minimum losses and undisturbed flow into the pump. Globe valves must not be installed in a suction pipe immediately before a pump. See Figure 13.13.

Best results for low pressure drop and minimum flow disturbance are achieved by full bore ball valves. Relief valves are fitted in positive displacement pump systems to prevent harmful increases in pressure, see Chapter 11, Section 11.5.

In pump suction systems, strainers or filters of various kinds may be necessary to provide protection against objects which can cause damage within the pump. These must be accessible for cleaning or replacement. The pressure drop across strainers or filters must be measured as this increases with the degree of blockage. It will be necessary to install a differential pressure indicator to check conditions. Standard screens are designated by width of mesh or diameter of holes as well as number of meshes or holes per unit of surface. For this purpose there are national Standards, see Table 13.1.

DIN 4188	Former Designation Meshes		Width of Mesh		USA Standard	Tyler	British Standard	Afnor
Meshes mm	Every cm	Every cm^3	Micr.	Inch	Meshes per inch			Module
			45	.0018	325	(325)	(350)	
0.063	100	10000	63	.0025	230	(250)	240	19

LIBERTY EXHIBIT 1034, Page 339
This book belongs to Robert Durham (rdurham@thewaylabs.com)
Copyright Elsevier 2024

DIN 4188	Former Designation Meshes		Width of Mesh		USA Standard	Tyler	British Standard	Afnor
Meshes mm	Every cm	Every cm^3	Micr.	Inch	Meshes per inch			Module
0.09	70	4900	90	.0036	170	170	170	
0.125	50	2500	125	.0049	120	115	120	22
			180	.0071	80	80	85	
0.25	34	576	250	.0098	60	60	60	25
			355	.0139	45	42	44	
0.5	12	144	500	.0197	35	32	30	28
			710	.0280	25	24	22	
1	6	36	1000	.0394	18	16	16	31
			1400	.0552	14	12	12	
2	3	9	2000	.0787	10	9	8	34
			2800	.1102	7	7	6	
4	(1.5)	(2.25)	4000	.1570	5	5	34	37
			5600	.2200	3.5	3.5		

Table 13.1 Comparison of national Standards for screen mesh

Pump sumps for water containing sand should be equipped with a sand and gravel trap, in which the rate of flow is reduced to about 0.3 m/s so that sedimentation may take place. Sand traps of this type must be emptied at suitable intervals if they are to function efficiently.

Pumping stations for sewage are sometimes provided with grills to trap rags, pieces of wood, etc. and thereby prevent blockage of the pumps. The cleaning of these grills is a complicated process and is usually carried out by mechanical means in large-scale systems. Reverse flushing through the pump during every shut-down period can reduce the risk of blockage considerably. If the delivery pipe is very short, its entire volume can be used for reverse flushing; in other cases an arrangement of valves according to Figure 13.14 is also effective.

In Type A the ball in the air valve should be of a suitable weight to achieve good functional effect. When the pump is started a small amount of liquid passes through the air intake, which should therefore be located in the pump sump or other drained well.

In Type B the non-return valve is a pneumatically or hydraulically operated shut-off valve.

The volume of liquid required for reverse flushing is 50 to 150 litres, depending on the size of the pump. A check should be made that the pump is able to tolerate a certain degree of reverse rotation. This does not, however, need to involve any high speed operation. Care must be taken to ensure that reverse flushing of this kind does not cause damage to the pump. It may be necessary to install devices for filling and tapping, air separation and sampling, etc. in the pump piping system.

Accurate flow measurement is generally required for metering pumps to check the amount of dosage. Such pumps are often supplied with graduated vessels which can be sealed off with valves as shown in Figure 13.15. In dosage systems it is always necessary to take into account the risk of over dosage due to defects in the control system, ejector effects, etc. It may therefore be necessary to incorporate special devices to counteract such risks.

13.5 Care and maintenance

Modern pump units are often supplied with large quantities of paperwork and manuals. It is not unusual for 10 sets to be provided; 20 on occasions. However, when a service engineer from the manufacturer visits the site he often cannot find a manual for reference. Paperwork for pump units is costly to produce but it is full essential information. Process operators and site maintenance staff are the people who need the information on a day-to-day basis.

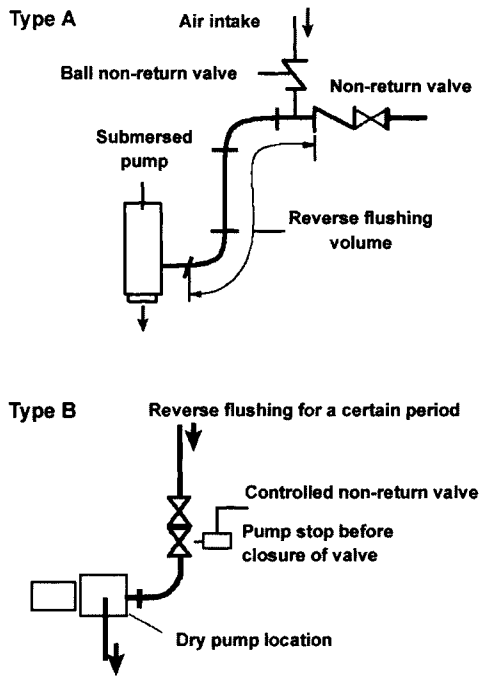

Figure 13.14 Reverse flushing systems for sewage pumps

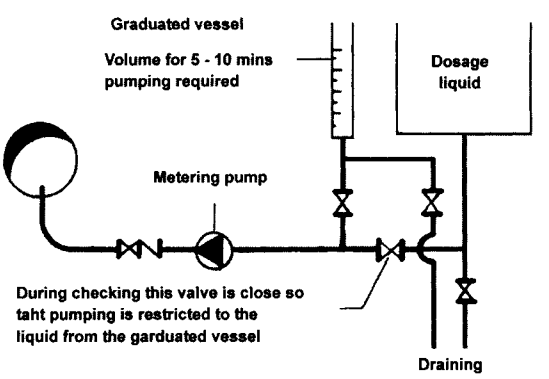

Figure 13.15 Graduated vessel for flow measurement of metering pump

It is essential that site staff are given original data produced by the pump manufacturer. Some contractors extract what they think is "essential" data from the pump manual and produce process manuals. Costly errors have been made which were avoidable.

13.5.1 General considerations

The first prerequisite for long service life and reliable operation of a pump unit is naturally, as applies to all types of machinery, correct installation. Secondly, once the pump is operating it should not be subjected to working conditions other than those for which it was specified and designed. The third is that the unit should receive the necessary care and maintenance. This is not generally carried out to preserve the economic value but to maintain reliability of operation.

13.5.2 Commissioning

The transition from installation to operation is "commissioning". Commissioning can be performed by site staff or the manufacturer's staff. If site staff are unfamiliar with some aspects of the pump unit, the manufacturer's personnel can combine commissioning with staff training.

The following list can be used as a commissioning guide. The manufacturer's help must be sought if clarification is required.

1 Read carefully the manufacturer's instructions regarding preparation for starting.

  Then read all of this list.

LIBERTY EXHIBIT 1034, Page 340
This book belongs to Robert Durham (rdurham@thewaylabs.com)
Copyright Elsevier 2024

The manufacturer's instructions take priority.

If in doubt, consult the manufacturer.

2 Fit temporary suction and discharge pressure gauges if necessary. Fit extra gauges to measure pressure drop across temporary suction strainer.

3 Check minimum flow by-pass is fitted correctly on rotodynamic pumps.

Check by-pass is fitted to positive displacement pumps.

4 Check if a mechanical seal or packing is fitted. If soft packing is fitted ensure packing is not too tight and has plenty of lubrication for bedding-in.

5 Check all external nuts and bolts are tightened correctly.

6 Check relief valve, if fitted, for correct setting. The relief valve manufacturer should have sealed and tagged the valve with contract settings.

7 Check gas precharge on pulsation dampers and accumulators for run-down systems. If the pump is to be commissioned at lower pressures than normal adjust damper precharge pressures. Precharge to 70% of nominal liquid pressure unless the manufacturer quotes alternative values.

8 Check external cooling, heating and quench systems are piped up correctly and supplies are available. Heating and cooling may be connected to the pump casing as well as the stuffing box(es). Check thoroughly.

9 Flush out all equipment which has been treated with rust preventatives.

10 Check specifications for lubricants and other liquids which must be used in reservoirs. Fill reservoirs to correct levels.

Do not use close approximations of liquids as a temporary measure.

11 Turn all rotating equipment by hand. If not free, investigate before proceeding further.

12 Check all power supplies are available to control system. Test all indicator lamps.

Ensure all systems are set to "OFF" except the system to be started which should be set to "HAND".

Check the resistance of all motor winding insulation with a Megger. Log results, switch on space heaters if condensation appears to be a problem.

Note: See IEEE 43-2000 IEEE Recommended Practice for Testing Insulation Resistance of Rotating Machinery, Institute of Electrical and Electronics Engineers, 2000, ISBN: 0738119245.

13 Spin motors uncoupled very briefly to check direction of rotation, adjust if necessary.

14 Start the smallest auxiliary system first. Check if any pumps on the system require venting or priming; do this before switching on. Some systems are equipped with hand pumps for priming.

Check and record operating conditions, make allowances for system being cold, check with manufacturer's figures.

Inspect all pipe runs and connections for leaks.

If the pump does not develop correct discharge pressure or flow seems low, stop immediately and investigate. See troubleshooting chart in Section 13.5.5.

NOTE: Venting is removing all the air from the pump casing. Some pumps are self-venting so that when the suction pipework is vented, and the discharge pipe up to the isolating valve, the pump will vent. Priming is filling the pump casing with liquid. If the pump is not self-venting there will be one or more vent valves on top of the casing.

NOTE: Do not start motors too frequently if problems occur. Do not restart motors while the shaft is rotating.

15 Simulate fault conditions and check instrument set points.

Check operation of annunciator and control logic for starting stand-by equipment.

16 Allow system to run for at least one hour, then stop and inspect filters.

If more than one pump is fitted in a system, start the other pump(s) and run each for one hour.

17 If pumps have stand-bys, set controls to "AUTO" and check correct operation.

18 Start all the auxiliary systems in turn by repeating steps 14 to 17.

19 Complicated drivers, such as engines and gas turbines, will have their own auxiliary systems, so start these first. Remove coupling spacers or driving pins and start the engine or turbine, according to the manufacturer's instructions, and run without the pump. When the driver is running properly, commission the pump.

20 Vent and prime the pump if necessary. If the process liquid is much hotter or colder than ambient conditions, the pump temperature must be adjusted slowly without thermal shock. The pump casing temperature should not change faster than 4°C per minute. Large high pressure pumps may need much slower changes. If the casing is heated or cooled by auxiliary systems, ensure even temperature distribution through the whole casing and shaft.

21 Check the manual for the pump starting instructions. Small rotodynamic pumps should be started with the discharge valve closed. As pump size increases, the pump may be started with the discharge valve partially open. Pumps fitted with minimum flow by-passes will probably start with the discharge valve closed.

Positive displacement pumps must be started with the discharge valve open unless a starting by-pass is fitted. If one is fitted, close the discharge valve and open the by-pass valve.

22 Turn on external quench and external heating or cooling circuits.

23 Start the pump. Rotodynamic pumps should have the discharge valve opened slowly as soon as the pump has reached rated speed. The valve does not have to be opened fully but sufficiently to allow a reasonable flow through the pump.

Positive displacement pumps can be run at low discharge pressure until the pump unit has been checked for correct operation. After successful operation at low pressure the discharge pressure can be increased in stages by throttling the by-pass valve. Over a period of about one hour the pressure should be increased to rated discharge pressure. If all systems operate correctly, the discharge valve should be opened and the by-pass valve closed completely.

24 Pumps fitted with torque convertors may experience difficulties running at very low loads. The discharge pressure or flow may have to be increased until the convertor can stabilise.

25 While the pump is running check the stuffing box(es) and bearings for overheating. Check the leakage at the stuffing box(es), adjust soft packing carefully, see Chapter 8.

Record operational values from all gauges fitted. Monitor progress of cooling water and heating medium temperatures. Monitor the condition of all filters, including the temporary suction strainer.

Stop the pump immediately if the discharge pressure falls unexpectedly.

26 When the pump is seen to be operating correctly, simulate auxiliary pump failures and monitor the automatic change-over to stand-by pumps.

27 After 12 hours running remove and clean any gearbox filters.

If pump operation is satisfactory, take readings and calculate overall pump unit efficiency. Take vibration readings, at

LIBERTY EXHIBIT 1034, Page 341
This book belongs to Robert Durham (rdurham@thewaylabs.com)
Copyright Elsevier 2024

marked locations on all bearing housings and suction/discharge pipework, and analyse harmonics. For reciprocating pumps, take pressure pulsation readings and analyse harmonics.

After 750 running hours, remove all oil filters and wash out oil filter housings. Drain all lubricating oil and replace. Fit new oil filters.

Remove coupling spacers or drive pins, check coupling alignment.

28 After an appropriate period of successful running remove all the temporary equipment, including the suction strainer. The system may then be handed over to the production department.

Give production operators log sheets to record operating conditions.

NOTE: If the equipment is not put into service immediately, then run at least once a month until warmed up.

NOTE: In the event of operational problems, the log sheets are a good guide to the changing condition of the pump. The pump manufacturer's service engineers will ask to see the log sheets if they are ever called to site.

13.5.3 Care of equipment

In the selection of pumps and the planning of installations, it is essential to take account of all the maintenance aspects. The assessment of a particular pump should be based on technical grounds connected with maintenance; ease of dismantling, availability of spare parts, trade skills required. Further, steps must be taken to ensure that adjacent pipe spools can be loosened easily, that working space, lifting facilities and adequate access routes are available. See Section 13.1.

The distinction between servicing and care, on the one hand, and preventive maintenance, on the other, is difficult to draw. The aim of care and maintenance is, of course, to prevent breakdowns as far as possible, with costly loss of production and subsequent process plant operational problems.

The necessary amount of care and maintenance is difficult to estimate. Factors such as the need for reliability of operation, the properties of the liquid pumped, the working environment of the pump, etc., exercise a marked influence. In general it can be recommended that care, as well as maintenance, should be incorporated into regular routines and that some form of database of faults noted and measures taken should be initiated and up-dated. Modern computers allow the storage and retrieval of vast quantities of information. Software is available which permits the storage of machinery data and each machine's service history.

With only a cursory glance, computer records do not appear to offer any advantage over card files or machine wallets. Consider some typical questions which are easily answered by a computerised system but virtually impossible for a manual system, unless you examine every machine wallet:

- How many machines use bearing 32010X?
- How many machines use ISO 320 oil?
- How many times has "Joe" checked pump alignments?
- How many machines went off-line when No.2 boiler blew a tube?

A properly organised computerised system can offer information unimaginable when only using cards and wallets. It also provides the basis for good cost control. It is estimated that the annual maintenance costs of a pump unit including spare parts amount to between 10% and 20% of the purchase cost of the unit.

Before pump failures are discussed, it is useful to consider how often pumps cause major problems as opposed to other equipment. Data published in 1988 in *Hydrocarbon Processing* revealed the following facts regarding the 100 worst incidents world-wide over a 30 year period. Table 13.2 lists the type of plant involved and Table 13.3 lists the type of equipment involved. The worst incident in the 30 year period was caused by a piping problem and cost $114,000,000 in property damage.

The worst incident in Europe, since 1945, took place in the UK in 2005, at a fuel storage depot. There was a large explosion followed by a very large fire. This incident has been traced to instrument failure; two level instruments on a petrol storage tank failed, resulting in, approximately, 300 tonnes of spilt petrol. One has to wonder what the operators were doing while the tank was overfilled. There was so much vapour in the air that even vehicle engines off site in the local area, failed to respond to normal throttle control! There must have been an 'operator' failure as well. At the very least, the operators had no 'experience' or 'interest' in what they were doing.

Type of plant	Number of incidents
Refineries	42
Petrochemical plants	16
Plastic-rubber plants	11
Chemical plants	10
Gas processing	7
Bulk terminals	7
Pipelines	2
Underground storage	2
Special	2
Gas oil production	1
Drilling rigs	0

Table 13.2 Types of plant involved in major incidents

Type of equipment	Number of incidents
Piping systems	29
Miscellaneous or unknown	22
Storage tanks	17
Reactors	10
Process holding tanks	5
Heat exchangers	4
Valves	4
Process towers	3
Compressors	2
Pumps	2
Gauges	2

Table 13.3 Types of equipment involved in major incidents

From Table 13.3 it can be seen that pumps created 2% of the problems overall and only 7% of the problems caused by pipework. No one would deny that pumps have problems, but those problems must be placed in context.

Tables 13.4, 13.5 and 13.6 review some practical cases of pump faults and their frequency of occurrence. These give some idea as to the types of functional troubles to be anticipated.

Component	Relative frequency of breakdown %
Centrifugal pump	88
Coupling	8
Electric Motor	4

Table 13.4 Frequency of breakdown of a horizontal centrifugal pump

Sub-component	Number of items	Relative frequency of breakdown %
Sundry small items	96	41
Soft packings	-	16
Mechanical seals	3	10
Control valves for sealing water	2	7
Roller bearings	2	8
Gland halves	4	3

LIBERTY EXHIBIT 1034, Page 342
This book belongs to Robert Durham (rdurham@thewaylabs.com)
Copyright Elsevier 2024

Sub-component	Number of items	Relative frequency of breakdown %
Shaft	1	10
Impeller	1	4
Pump casing	1	1

Table 13.5 Frequency of breakdown of an axially-split pump with a capacity of 5,200 l/min @ 17.8 m

Type of fault	Frequency %
Defective bearings	24
Blockage by foreign matter and formation of plugs	14
Gland packings, shaft sleeves	12
Packing	11
Worn out and damaged impellers	11
Broken shafts	7
Corrosion of components	4
Motor defects	4
Erosion and wear	4

Table 13.6 List of faults experienced by a large number of pumps of different types used in the cellulose industry

A general conclusion to be drawn from Tables 13.4 to 13.6 may be that faults in the pump are much more common than in couplings or motors. This should not be surprising. Faults affecting bearings and packings are of relatively high frequency in the pump, as are also blockages and damage to impellers when troublesome liquids are pumped. A control study of a sewage disposal plant with about 250 pumps in operation in pumping stations and purification plants yielded much the same results.

The second most common fault, "Blockage by foreign matter and formation of plug" is not really a pump problem. It is, more correctly, a pump application problem or a system failure. The term "foreign matter" suggests that material which should not have been there is blocking the pump; this is not the fault of the pump. Formation of plugs suggests the pump was running too fast, an application problem, or the process liquid was "off-spec", a system problem.

There are two causes of unreliability and failure which do not appear in popular surveys; inappropriate piping design and inexperienced operators. Pump manufacturers expect a pump to be installed with 'sensible' piping. The suction piping is the most important. If a pump has a poor liquid supply then a wide variety of problems will ensue.

REMEMBER! a pump does not **suck**. It is a waste of time trying to pull liquids; they have incredibly low tensile strengths; the liquid column will break. Liquids can only be **pushed**. The suction piping must provide an efficient route from source to pump. Liquid falling into the pump is by far the most reliable arrangement. Suction piping which is self-venting and self-priming is much better than all other styles; it can save a lot of man-hours during start-up.

Very few engineers seem capable of distinguishing between 'good' and 'bad' pump piping. Operators must understand the equipment installed in the plant. Many simple failures, during commissioning, show that operators do not understand the basic fundamentals of pump use. A much higher level of 'useful' education is required; not degrees in pump design; practical knowledge about what pumps 'can' and 'can't' do!

13.5.4 Preventative maintenance

The care of a pump unit should be carried out by routine inspection performed according to a definitive schedule. The timing intervals required are dependent upon the working conditions and environment of the pump and the demands of operational reliability. Operational reliability should have been a major part of the pump specification and evaluation criteria.

Good maintenance practices cannot reverse deficiencies of pump selection. Some pumps may require attention every day; topping up oil reservoirs for example. Periods exceeding one week are inadvisable, especially in the case of pumps in distant pump-houses and lacking alarm systems. Observations such as listening and feeling for vibrations, and checks on pressure, flow and power consumption should be performed with every inspection in addition to the checking of packings and mechanical seals. More detailed investigation should, of course, be undertaken if deviations from normal operation are noted. Section 13.5.5 includes troubleshooting guides which may be of assistance.

If several pumps are included in the system, the starting sequence should be adjusted with the "lag-lead" switch so that the running time is divided between all the units. Automatic and alarm devices should also be regularly tested.

Dosing pumps often require special checks for flow measurement, necessitating the use of graduated vessels or other measuring equipment, and also the testing of control equipment.

The concept of care must include the external cleaning of pump and motor in addition to the cleaning of screens and filters on the suction side and in pump sumps. The necessary cleaning of pump casings and impellers may also be classed under the same heading. This work may be extensive, depending upon the type of pump and the nature of the product. The possibility of regular reverse flushing can considerably reduce trouble caused by blockage, see Section 13.4.

Cleaning of the casing and impeller means that the unit must be able to tolerate a certain amount of low speed reverse rotation, which should be checked with the supplier, and that due care should be exercised.

Reciprocating positive displacement pumps used in sewage and solid handling applications frequently have easy access to valves for inspection and cleaning. These should be inspected a regular intervals.

Pumps used in hygienic applications such as food processing, dairy products, etc., must be cleaned and sterilised in accordance with the prevailing regulations.

Maintenance in this context refers to preventive maintenance intended to reduce the number of breakdowns and the resulting unscheduled shut-downs. Attempts have been made to calculate optimum maintenance statistics for pumps, but the results are uncertain and the systems are difficult to handle.

Generalisation of pump maintenance is a waste of time. Pumps operate in widely differing circumstances with a vast array of materials. The best policy is to initiate a strict, very regular, routine inspection of the equipment and continue this until a pattern of equipment behaviour is apparent. At this stage, it may be possible to relax the inspection routine in some areas.

It is important to remember that the pump cannot be held responsible for the effects of process upsets. If the pump requires an overhaul after a serious process upset this should not affect the pump's normal inspection regime. The cause of the upset must be traced and rectified. This is the area where the normal inspection routine should be modified.

Timing	Activity
	Daily
	Check and record process operating conditions
	Check and record values of all indicators on the unit
	Check oil levels; add oil as required (1)
	Check levels in any external reservoirs; add liquid as required
	Check liquid level in gas charged suction stabilisers; add gas as required
	Check water in radiators of engines
	Check bearings and stuffing boxes, by hand, for temperature
	Check for leakage from mechanical seals
	Assess leakage from soft packed stuffing boxes
	Check vibration levels by hand
	Test annunciator lamps and audible alarm
	Listen for unusual noises or change in noise

LIBERTY EXHIBIT 1034, Page 343
This book belongs to Robert Durham (rdurham@thewaylabs.com)
Copyright Elsevier 2024

Timing	Activity
	Weekly
	Pumps with valve covers, inspect valves
	Pumps with soft packing, back-off gland slightly, oil and reset
	Switch over gearbox filters and clean used filter
	Switch over fuel filters and clean used filter
	Vent water side of coolers
	Vent filters
	Check for leaks on pipework
	Check for leaks at shaft seals
	Weekly
	Check glands on control valves, back-off and reset
	Check air filters on engines and gas turbines
	Check water in batteries
	Assess pressure pulsations from pressure indicators
	Check gas pre-charge pressure in dampeners on stand-by units
	Adjust "lag-lead" switches so that stand-by equipment runs 1 week in 4
	Monthly
	Vent all gauge connections
	Drain off water from all oil reservoirs
	Smear grease on important external nuts and exposed stud threads
	Take temperature readings on bearings and stuffing boxes
	Take vibration readings on pump and driver and at marked locations on the process pipework
	Quarterly
	Clean all air breathers
	Clean all cooling fins on housings
	Clean motor fan and any air filters
	Check vee-belt tension
	Check coupling bolts
	Check battery connections, smear with grease
	Take oil samples and analyse
	Take vibration readings and analyse harmonics
	Biannually
	Check torque settings of important fasteners + holding down bolts
	Check clearances of sliding bearings, wear rings, balance disc
	Check stuffing box clearances
	Check for general wear and corrosion
	Check seals on all drive shafts
	Check battery cell voltages individually
	Take readings and calculate overall pump unit efficiency
	Annually
	Drain all oil reservoirs
	Clean reservoirs internally
	Clean any internal oil passages
	Check and clean any orifices
	Check and clean any strainers
	Check oil pumps internally for wear
	Check condition of any rubber hoses
	Check seals on auxiliary pumps
	Check reciprocating pump valves, change springs
	Clean water side of coolers
	Refill with new oil
	Grease motor bearings (2)
	Check motor insulation resistance
	Inspect relief valve seats, poppets and springs
	Check calibration and set points of instruments
	2 years
	Thoroughly inspect all pressure vessels
	Re-hydrotest all pressure vessels (3)

(1) Do not mix different grades of oil. Do not mix different brands of oil.

(2) Check motor manual, regreasing period is based on motor size.

(3) Local regulations may be more stringent

Table 13.7 Typical routine maintenance schedule

Table 13.7 lists the type of typical routine inspections and maintenance functions which should be considered. Not all pumps will have all the systems mentioned. The timings of these activities may be relaxed if the pump unit performance is stable and acceptable. Oil changes may need to be more frequent if operating conditions are severe. Oil must be changed at least every 18 months irrespective of operational time or apparent condition. Checking the gas pre-charge pressure is the best indicator of a healthy bladder in a damper or an accumulator. If the bladder is chemically attacked it will lose gas faster.

Small handheld instruments are available which are capable of measuring; temperature, speed, vibration, bearing condition and cavitation assessment. Devices such as these greatly improve the necessary data collection to improve equipment reliability.

Overhaul implies taking the pump to pieces and examining all parts. In the case of pumps working with abrasive liquid-solid mixtures or other difficult liquids, overhauls must be carried out relatively frequently, possibly every year. Routine inspection will indicate the need for a complete or partial overhaul. Standard process pumps and sewage pumps usually require overhauls at intervals of three to five years. For pumps handling clean water the intervals can be still further extended. Boiler feed pumps, operated at steady-state stable conditions, have been known to last 10 years between shutdowns. Stable operating conditions promote a low-wear running condition. During overhauls the pump is cleaned internally and externally.

Bearings and other items subject to wear are checked and where necessary replaced. Wear ring clearance should be checked. This should not exceed the manufacturer's dimension, as the mechanical efficiency of the pump is adversely affected if the clearance is large. The impeller and the pump casing are checked for deposits, cavitation and corrosion damage. If the impeller is damaged it must be repaired or replaced. An impeller in poor condition means a drastic reduction of pump performance.

The clearance of rotary positive displacement pumps should be checked; enlarged clearances produce higher slip losses, lower flow and lower efficiency. The valves of reciprocating pumps should be inspected. Worn seats form poor seals and reduce pump flow. Many valve types can be ground-in to improve the seal. Valve springs should be replaced regularly; usually every year.

Pump overhauls are expensive and it is important to consider whether they should be carried out more than a few times. In the case of small and simple pumps it is usually more profitable to replace the pump than to perform a complete overhaul.

13.5.5 Trouble-shooting guides

Trouble-shooting pumps is somewhat taken for granted; it may not be what you think. Trouble-shooting may be defined as: making the pump do what it was specified to do.

The first step is to check the actual operating conditions against the datasheet conditions. If the conditions are different then it is perhaps not surprising that the pump does not perform correctly. If the plant operating conditions have changed since the pump was specified and purchased then the pump may require "up-grading".

A review of Tables 13.8, 13.9 and 13.10 maybe helpful.

Symptom	Possible cause	Remedial action
Pump won't start		
	Power failure	Check all power supplies
	Blown fuses	Check all fuses
	Motor single phasing	Check motor wiring
	Control switch contacts open	Check all instrument switches in motor contactor circuit
No flow		
	Suction valve closed	Check all valves in pump pipework for correct position
	Discharge valve closed	Vent and prime pump
	Pump not primed	Check suction pipework, replace gaskets
	Air leaks in suction pipes	Check stuffing box
	Excessive suction lift	Check calculations, check liquid temperature

LIBERTY EXHIBIT 1034, Page 344
This book belongs to Robert Durham (rdurham@thewaylabs.com)
Copyright Elsevier 2024

Symptom	Possible cause	Remedial action
	Suction pipe blocked or closed valve	Check suction valve, check suction pipework
	Impeller blocked	Pump vibrates badly; strip pump
	Differential head too high	Check pressure gauges, check calculations
	Pump speed low	Check pump speed, check motor frequency, check motor voltage
	Wrong direction of rotation	Check rotation
Low flow		
	Differential head too high	Check pressure gauges, check calculations
	Pump speed low	Check pump speed, check motor frequency, check motor voltage
	Impeller partially blocked	Pump vibrates badly, strip pump
	Insufficient NPSHa	Noisy pump, check calculations Small air leak through stuffing box Gas evolving from liquid
	Pump wear or damage	Excessive wear ring clearance Excessive balance drum/disc clearance Damaged impeller
Low head		
	Pump running out on curve	Check flow, throttle discharge
	Pump speed low	Check pump speed, check motor frequency, check motor voltage
	Impeller too small	Check flow, check calculations, check pump curve
	Pump wear	Excessive wear ring clearances Excessive balance drum/disc clearance
High flow		
	Differential head too low	Check pressure gauges, check calculations; throttle discharge valve
	Liquid viscosity too low	Check data sheet conditions, check calculations; throttle discharge valve
	Impeller diameter too big	Check data sheet conditions, measure impeller; throttle discharge valve
	Pump speed high	Check pump speed, check motor frequency; correct pump drive
High power consumption		
	Pump power high	Liquid SG high, check liquid Liquid viscosity high, check liquid Differential head low, flow high, check operating conditions Pump bearings/stuffing boxes binding Pump speed high, check speed
	Electrical faults	Voltage and frequency low, check supply Motor problem, check motor
Pump vibration		
	Poor alignment	Check alignment Check coupling assembly Check baseplate grouting Check process pipework
	Insufficient NPSHa	Check operating conditions, check gauges
	Damaged impeller	Check vibration harmonics, strip pump
	Bearing problem	Check bearing clearance Check vibration harmonics
Motor vibration		
	Poor alignment	Check alignment Check coupling assembly Check baseplate grouting
	Bearing problem	Check bearing clearance Check vibration harmonics
	Motor rotor fault	Loose rotor bars

Table 13.8 Trouble-shooting guide for rotodynamic pumps

Symptom	Possible cause	Remedial action
Pump won't start		
	Power failure	Check all power supplies
	Blown fuses	Check all fuses
	Motor single phasing	Check motor wiring
	Control switch contacts open	Check all instruments switches in motor contactor circuit
No flow		
	Suction valve closed	Check suction pipework valves
	Discharge valve closed	Check for flow through relief valve
	Pump not primed	Vent and prime pump
	Air leaks in suction pipes	Check suction pipework, replace gaskets, check stuffing box
	Excessive suction lift	Check calculations, check liquid temperature
	Wrong direction of rotation	Check rotation
Low flow		
	Differential pressure too great	Check:- pressure gauges, calculations, relief valve flow
	Bypass valve partially open	Check bypass valve
	Pump speed low	Check:- pump speed, motor frequency, motor voltage
	Excessive wear	Check:- pump clearances, relief valve seat; replace worn parts
	Low viscosity	Check:- liquid temperature, liquid properties
	Insufficient NPIPa	Check:- pressure gauges, liquid temperatures
	Gas/vapour entrained in liquid	Check:- condition of liquid supply
Low discharge pressure		
	Pump speed low	Check:- pump speed, motor frequency, motor voltage
	Low viscosity	Check:- liquid temperature, liquid properties
	Excessive water	Check:- pump clearances, relief valve seat; replace worn parts
	Bypass valve partially open	Check:- bypass valve
High discharge pressure		
	Relief valve stuck	Check:- relief valve
	Relief valve incorrectly set	Check:- relief valve settings
	High viscosity	Check:- liquid temperature, liquid properties
High power consumption		
	Viscosity high	Check:- liquid temperature, liquid properties
	Discharge pressure high	Check:- pressure gauges, operating conditions
Pump vibration		
	Poor alignment	Check:- alignment, coupling assembly, pump holding down bolts, baseplate foundation bolts, baseplate grouting
Pump vibration		
	Insufficient $NPIP_{at}$	Check:- operating conditions, instrumentation, liquid properties
	Entrained gas/vapour in liquid	Check:- condition of supply liquid

Table 13.9 Trouble-shooting guide for rotary pumps

Symptom	Possible cause	Remedial action
Pump won't start		
	Power failure	Check:- all power supplies
	Blown fuses	Check:- all fuses
	Motor single phasing	Check:- motor wiring
	Control switch contacts open	Check:- all instrument switches in motor contactor circuit
No flow		
	Suction valve closed	Check:- suction pipework valves
	Discharge valve closed	Check:- flow through relief valve
	Pump not primed	Vent and prime pump
	Air leaks in suction pipes	Check:- suction pipework, stuffing box; replace gaskets
Low flow		
	Differential pressure too great	Check:- pressure gauges, calculations, relief valve flow
	Bypass valve partially open	Check:- bypass valve
	Pump speed low	Check:- pump speed, motor frequency, motor voltage
	Excessive wear	Check:- pump valves, relief valve seat; replace worn parts
	Insufficient NPIPa	Check:- presssure gauges, liquid temperature
	High viscosity	Check:- liquid properties; increase liquid temperature
	Gas/vapour entrained in liquid	Check:- condition of liquid supply
Very low flow		
	Broken valve spring(s)	Check:- suction/discharge valves; replace spring(s)
Low discharge pressure		
	Pump speed low	Check:- pump speed, motor frequency, motor voltage

LIBERTY EXHIBIT 1034, Page 345
This book belongs to Robert Durham (rdurham@thewaylabs.com)
Copyright Elsevier 2024

Symptom	Possible cause	Remedial action
	Excessive wear	Check:- pump valves, relief valve seat; replace worn parts
High discharge pressure		
	Bypass valve partially open	Check:- bypass valve
	Relief valve stuck	Check:- relief valve
	Relief valve incorrectly set	Check:- relief valve settings
High power consumption		
	Discharge pressure high	Check:- pressure gauges, operating conditions
Pump vibration		
	Poor alignment	Check:- alignment, coupling assembly, pump holding down bolts, baseplate foundation bolts, baseplate grouting
	Insufficient NPIPa	Check:- operating conditions, instrumentation, liquid properties
	Entrained gas/vapour in liquid	Check:- condition of liquid supply

Table 13.10 Trouble-shooting guide for reciprocating pumps

Harmonics have been mentioned during commissioning as well as troubleshooting. Vibration and pressure pulsation harmonics can be analysed by specialists and the cause(s) of the problem diagnosed. Benchmark readings must be taken immediately after commissioning for comparison later if problems arise.

For soft packed stuffing box problems see Chapter 8, Sections 8.3.1.6 and 8.5.6, for mechanical seals see Chapter 8, Section 8.3.2.9.

13.5.6 Stocking spare parts

When buying pumps it is important to check the pump supplier's ability to maintain a stock of spare parts. The supplier should be able to provide a quotation for:

- Commissioning spares
- Spares for 1 year
- Spares for 2 years
- Insurance spares

Spares quotations will include delivery times. The spares quoted will be the parts which the supplier knows from experience will wear or become damaged. Insurance spares may be required if the pump is on a critical service and space is not available for stand-bys. Spares are costly. Some manufacturers may offer a discount if the spares are purchased with the complete pump. If the quotation does not mention discounts, ask.

The assessment of spares requirement is dependent upon many factors; the process liquid, the operating conditions, the number of hours of operation per year, delivery times for spare parts from the manufacturer, storage costs, etc. Table 13.11 shows a proposal for stocking spares in relation to the number of pumps installed for centrifugal pumps based on the German VDMA Standard 24296. The VDMA German Engineering Federation is one of the key association service providers in Europe and offers one of the largest engineering industry networks in Europe.

The pump supplier should also be asked about the supply of spare parts if a pump model is made obsolete and current production ceases.

When failure of the pump involves risk of damage, for example the possibilities of flooding or vital cooling systems being put out of action, a stand-by unit with an automatic starting system should always be installed if space allows. When a number of pumps of the same size share a service, it is prudent to have one complete unit in reserve for change-over in the event of a breakdown or in the case of a planned overhaul. Naturally the pipe connections, electrical installation, etc. should permit really rapid change-over with the minimum of inconvenience and effort.

Essential processes which run hot or cold may require the pump to be preheated or precooled before normal operation can proceed. The allowable step change in temperature is a function of pump size and is unlikely to be larger than 50°C. Quick-start stand-by equipment will require extra pipework for the circulation of heating/cooling mediums. "Hot" stand-bys must be checked periodically; pumps with long shafts should be rotated 90° regularly.

If overhauls and repairs are to be performed by the user's staff, it is also important that the tools required for the purpose should be obtained. Pump suppliers can make the necessary recommendations. If special tools are necessary, the pump supplier should quote costs for the tools when quoting for the pump. The use of unsuitable tools frequently results in more serious damage than that for which measures were to be taken.

Spare parts	Number of pumps					
	2	3	4	5	6	8
	Number of spare parts					
Impellers	1	1	1	2	2	3
Wear rings	1	1	1	2	2	3
Sealing rings	2	2	2	3	3	4
Shafts with impeller attachments	1	1	2	2	2	3
Shaft sleeves	2	2	2	3	3	4
Bearings	1	1	2	2	3	4
Mechanical seals, sets	4	6	8	8	9	12
Other seals, sets	4	6	8	8	9	12
Stuffing box packings	16	16	24	24	24	32
Sealing rings	2	3	4	4	4	6
Seats	2	3	4	4	4	6
O-rings	2	3	6	8	8	10
Seat packings	2	3	6	8	8	10
Springs	1	1	1	1	2	2

Table 13.11 Proposal for stocking spare parts for centrifugal pumps

13.6 Useful references

Troubleshooting centrifugal pumps and their systems, Ron Palgrave, Elsevier, 2003, ISBN 1856173197.

Know and understand centrifugal pumps, Bachus, Elsevier, 2003, ISBN 1856174039.

Predictive maintenance of pumps using condition monitoring, Beebe, Elsevier, 2004, ISBN 1856174085.

LIBERTY EXHIBIT 1034, Page 346
This book belongs to Robert Durham (rdurham@thewaylabs.com)
Copyright Elsevier 2024