2033

US 20250161718A1

(19) **United States**

(12) **Patent Application Publication**

DAFT et al.

(10) **Pub. No.: US 2025/0161718 A1**

(43) **Pub. Date: May 22, 2025**

(54) **WEARABLE CLOSED LOOP TUS SYSTEM**

(71) Applicant: **Sanmai Technologies, PBC**, Sunnyvale, CA (US)

(72) Inventors: **Christopher DAFT**, Tucson, AZ (US); **Bicheng WU**, Palo Alto, CA (US)

(21) Appl. No.: **18/920,615**

(22) Filed: **Oct. 18, 2024**

Related U.S. Application Data

(60) Provisional application No. 63/601,577, filed on Nov. 21, 2023.

Publication Classification

(51) **Int. Cl.**

A61N 7/00	(2006.01)
B06B 1/06	(2006.01)
G06F 21/44	(2013.01)

(52) **U.S. Cl.**

CPC ***A61N 7/00*** (2013.01); ***B06B 1/0622*** (2013.01); ***G06F 21/44*** (2013.01); *A61N 2007/0026* (2013.01); *A61N 2007/0056* (2013.01); *A61N 2007/0082* (2013.01); *B06B 2201/76* (2013.01)

(57) **ABSTRACT**

A TUS (transcranial ultrasound) system with a matrix array transducer in a wearable format is disclosed. The TUS system uses ASIC (application-specific integrated circuit) and MEMS (micro-electromechanical system) technologies to achieve power, size, and weight reductions, allowing the device to be worn. In an embodiment, the TUS system can reliably find a target anatomical structure and remain locked onto the target throughout usage. All real-time tasks are controlled locally within the TUS system for a closed-loop operation. Safeguards enable subjects to use the system at home for medical treatment and wellness usage, as well as in a clinic. A method for using the system is disclosed.

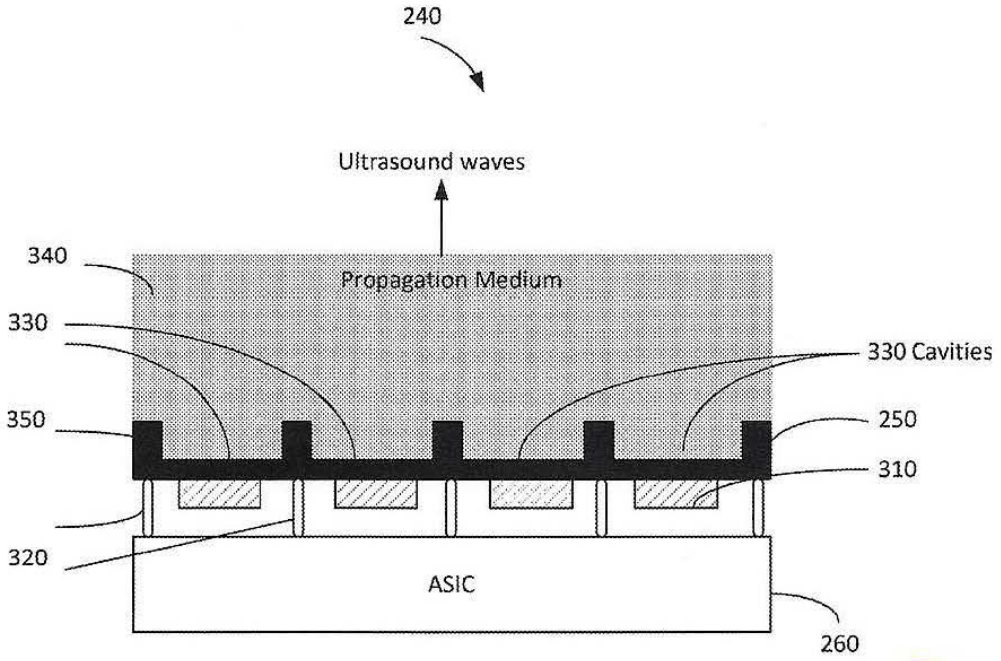

DAFT 2033
08/29/2025
Dr. Christopher Daft

FACETEC EXHIBIT 2033
JUMIO v. FACETEC
IPR2025-00106

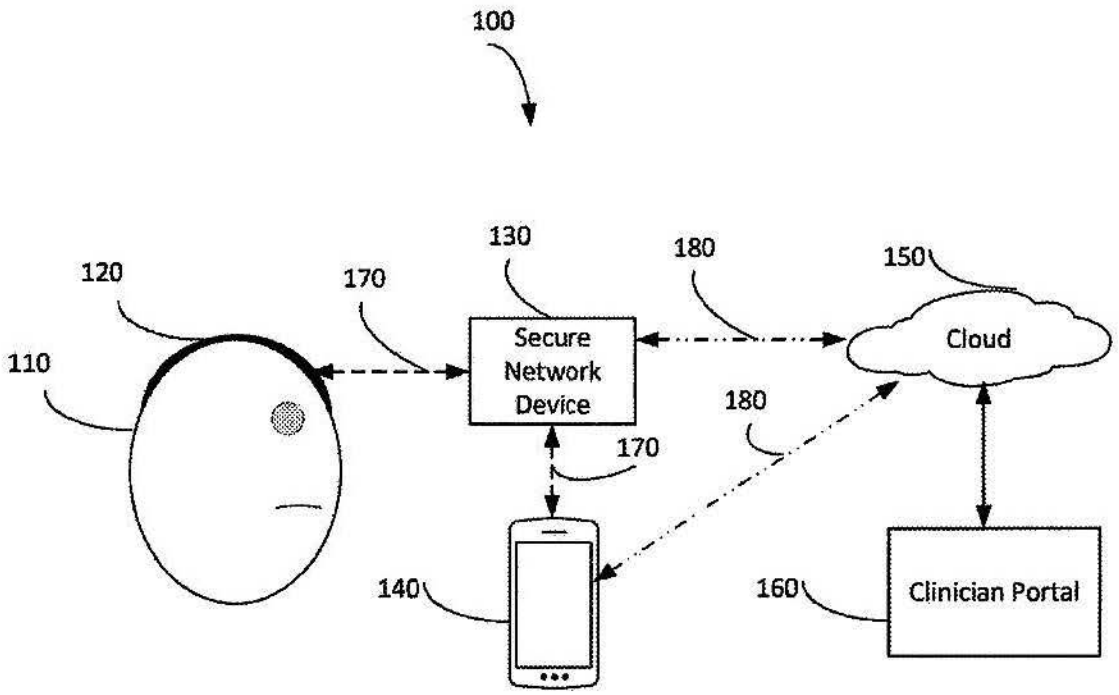
100
130
180
150
120
170
Secure
Network
Device
Cloud
110
180
170
140
160
Clinician Portal

Fig. 1

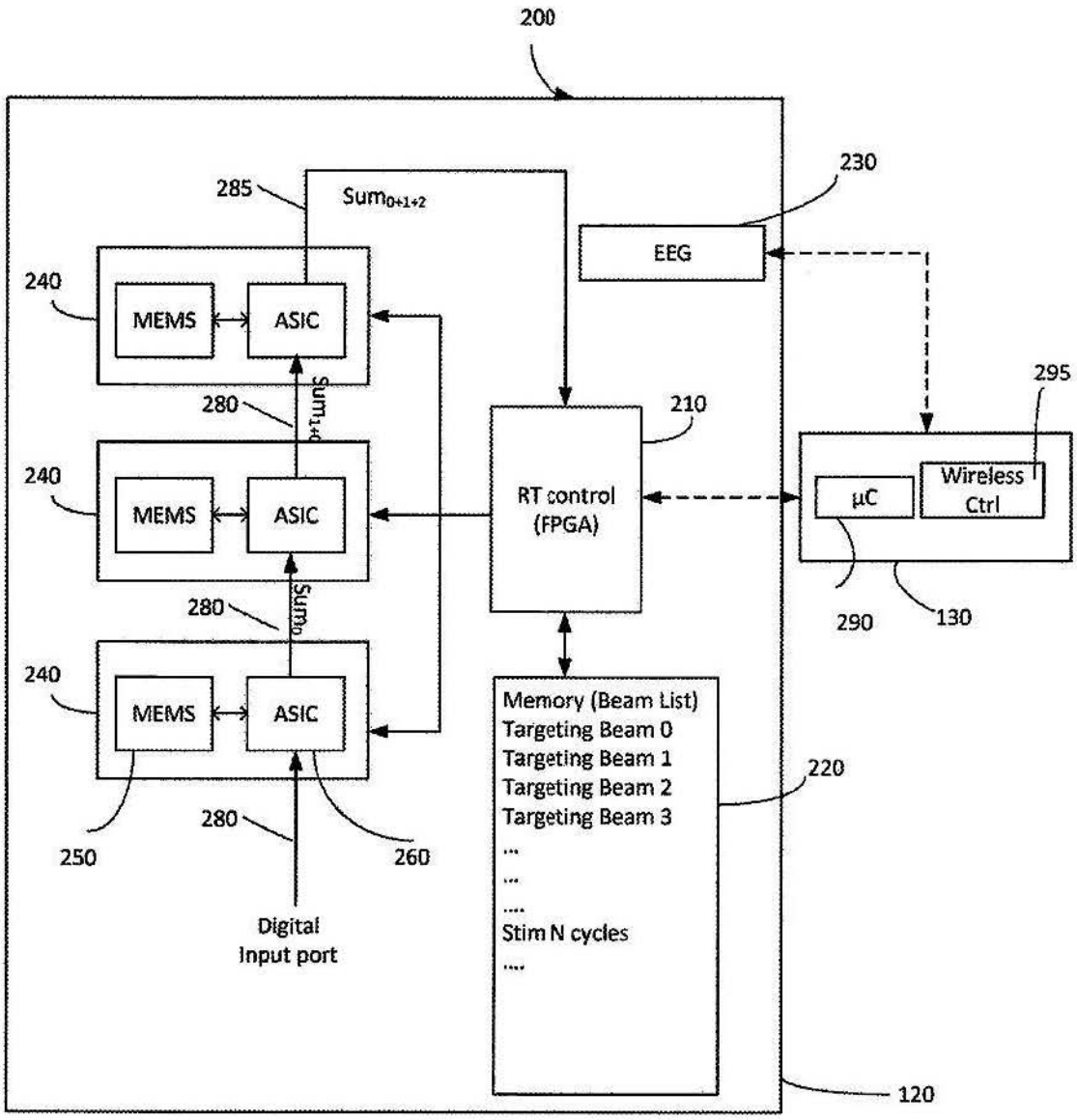
200
285
Sum0+1+2
230
EEG
240
MEMS
ASIC
280
Sum1+2
210
295
RT control
(FPGA)
µC
Wireless
Ctrl
290
130
Sum0
Memory (Beam List)
Targeting Beam 0
Targeting Beam 1
Targeting Beam 2
Targeting Beam 3
...
...
....
Stim N cycles
....
220
250
260
Digital
Input port
120

Fig. 2

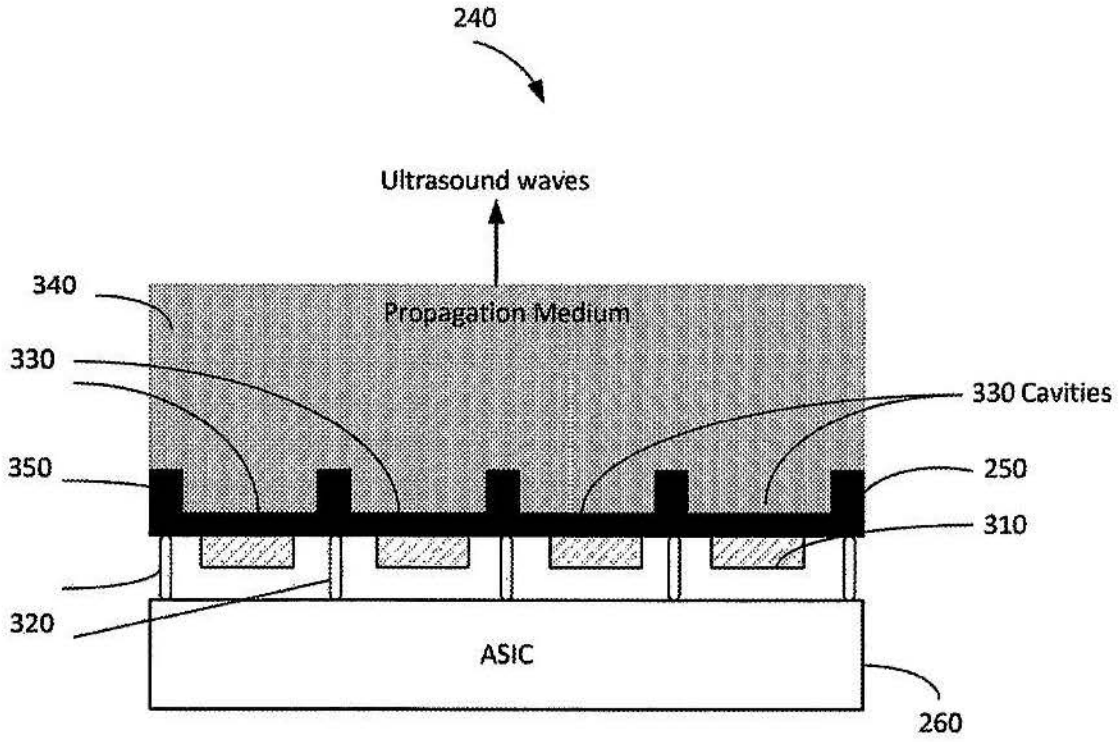
240
Ultrasound waves
340
Propagation Medium
330
330 Cavities
350
250
310
320
ASIC
260

Fig. 3

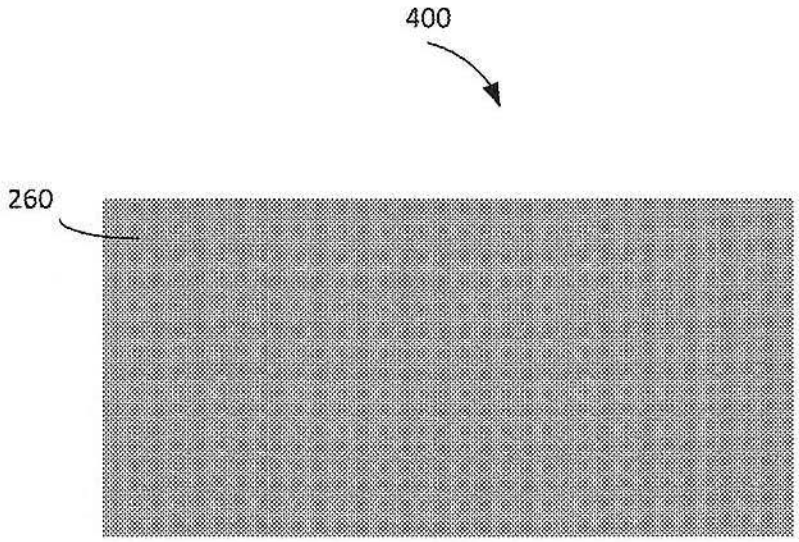

Fig. 4

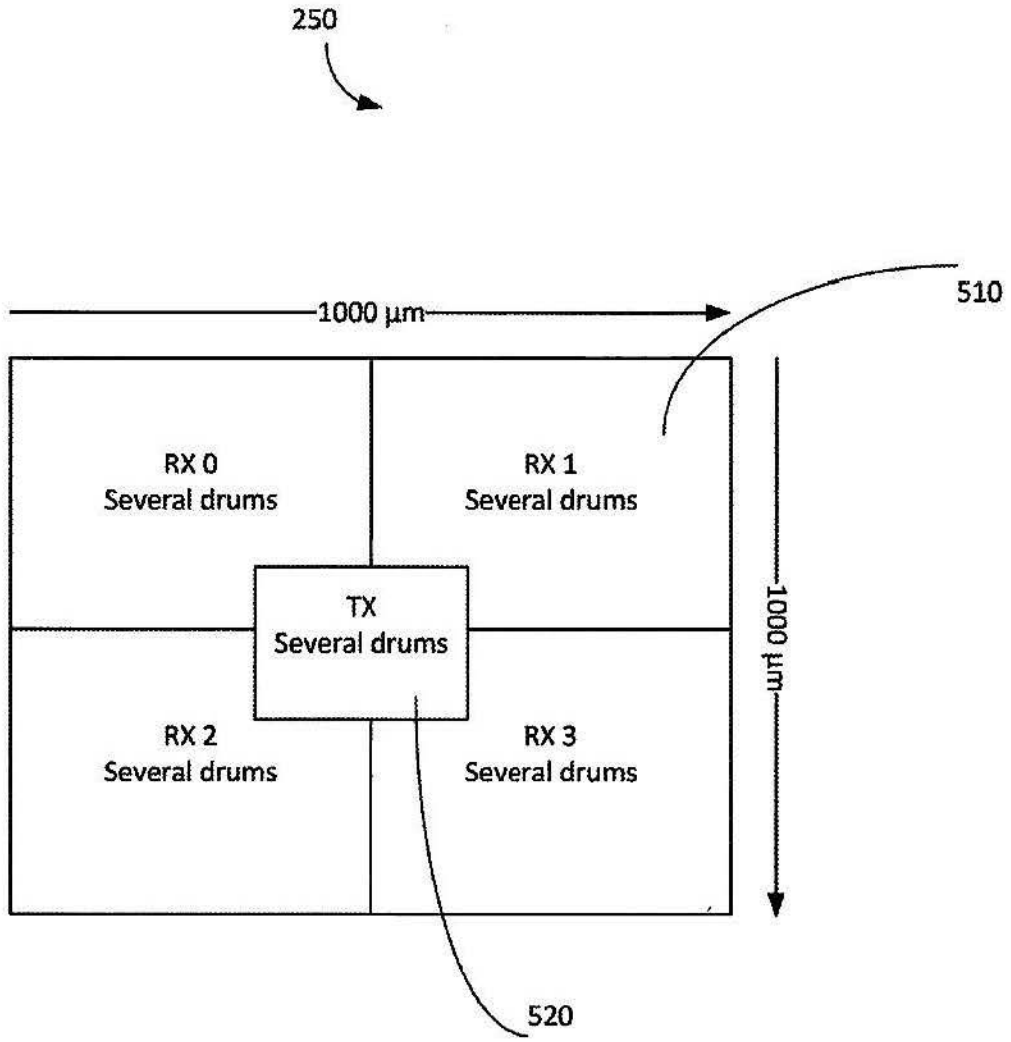
250
1000 µm
510
RX 0
Several drums
RX 1
Several drums
TX
Several drums
1000 µm
RX 2
Several drums
RX 3
Several drums
520

Fig. 5

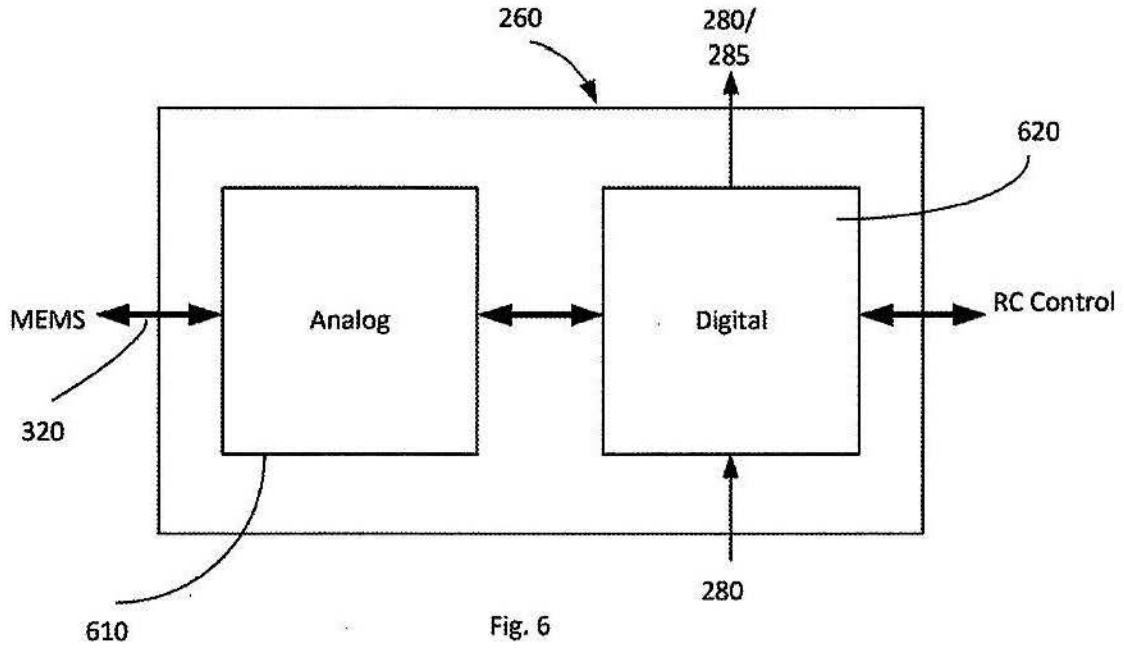

Fig. 6

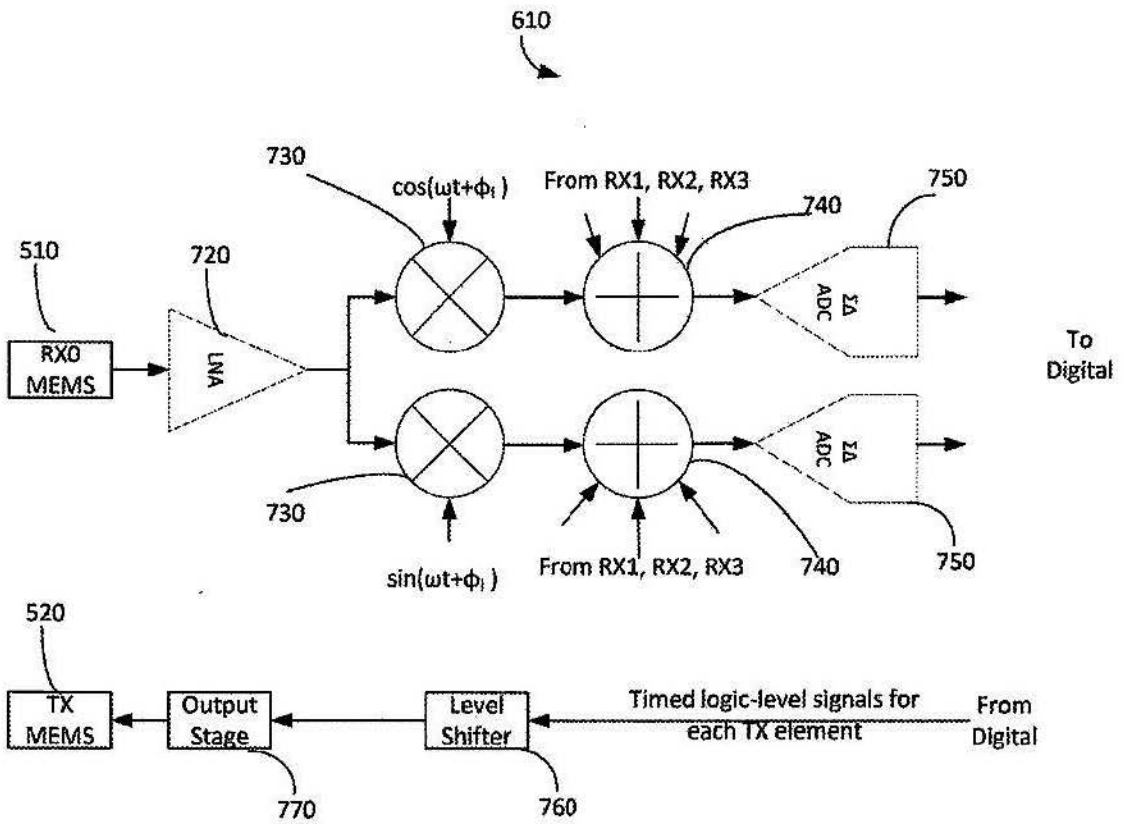
610
730
cos(ωt+φi)
From RX1, RX2, RX3
740
750
510
720
RX0
MEMS
LNA
ΣΔ
ADC
To
Digital
730
sin(ωt+φi)
From RX1, RX2, RX3
740
750
520
TX
MEMS
Output
Stage
Level
Shifter
Timed logic-level signals for
each TX element
From
Digital
770
760

Fig. 7

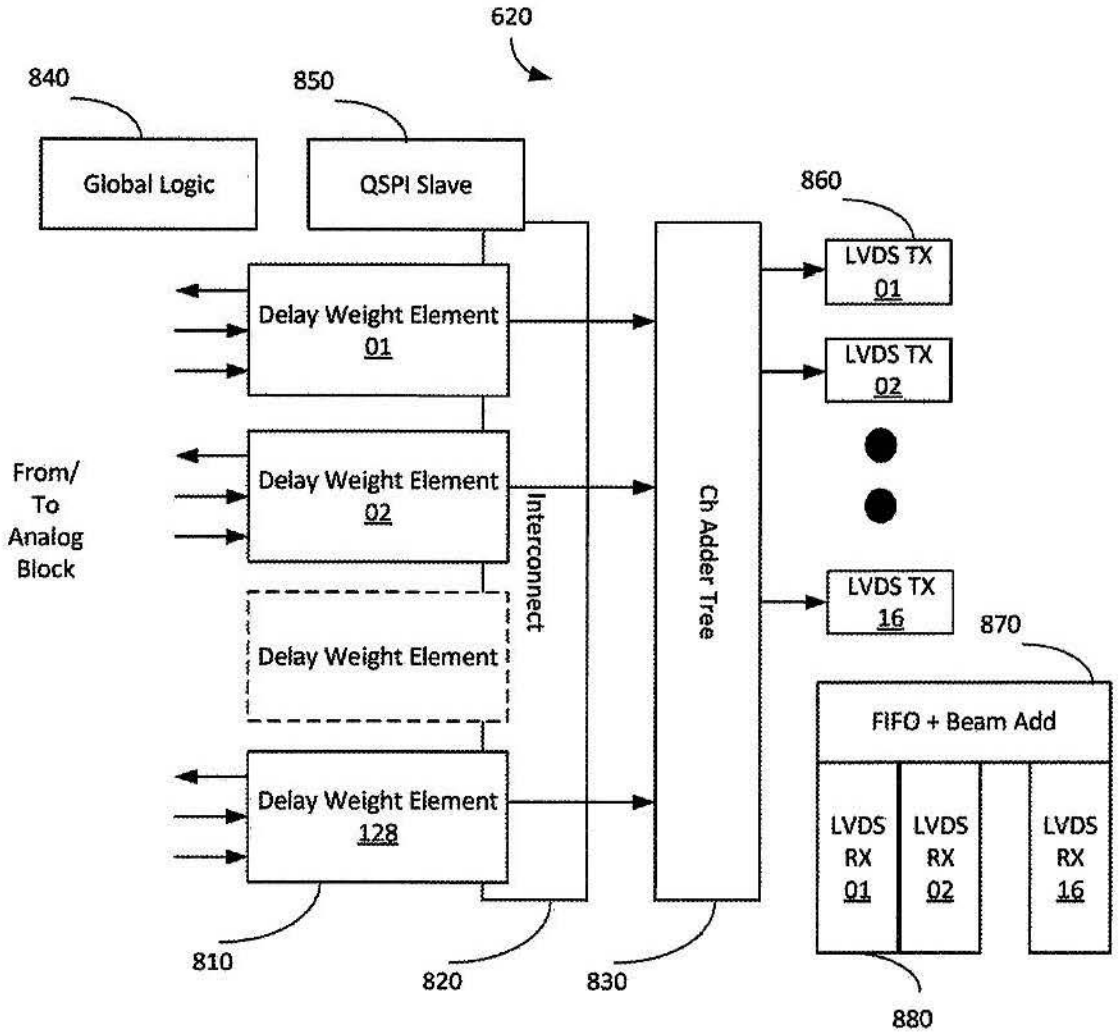
620
840
850
Global Logic
QSPI Slave
860
LVDS TX 01
LVDS TX 02
LVDS TX 16
Delay Weight Element 01
Delay Weight Element 02
Delay Weight Element
Delay Weight Element 128
From/ To Analog Block
Interconnect
Ch Adder Tree
870
FIFO + Beam Add
LVDS RX 01
LVDS RX 02
LVDS RX 16
810
820
830
880

Fig. 8

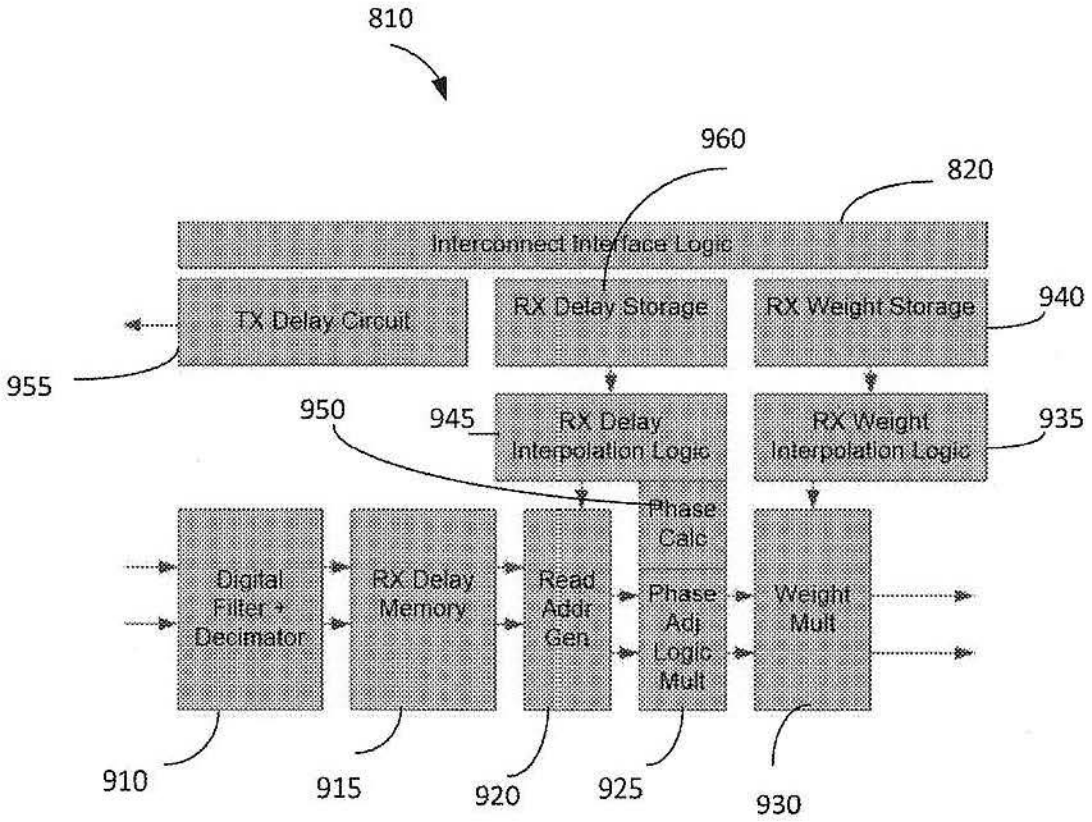
810
960
820
Interconnect Interface Logic
TX Delay Circuit
RX Delay Storage
RX Weight Storage
940
955
950
945
RX Delay Interpolation Logic
RX Weight Interpolation Logic
935
Phase Calc
Digital Filter + Decimator
RX Delay Memory
Read Addr Gen
Phase Adj Logic Mult
Weight Mult
910
915
920
925
930

Fig. 9

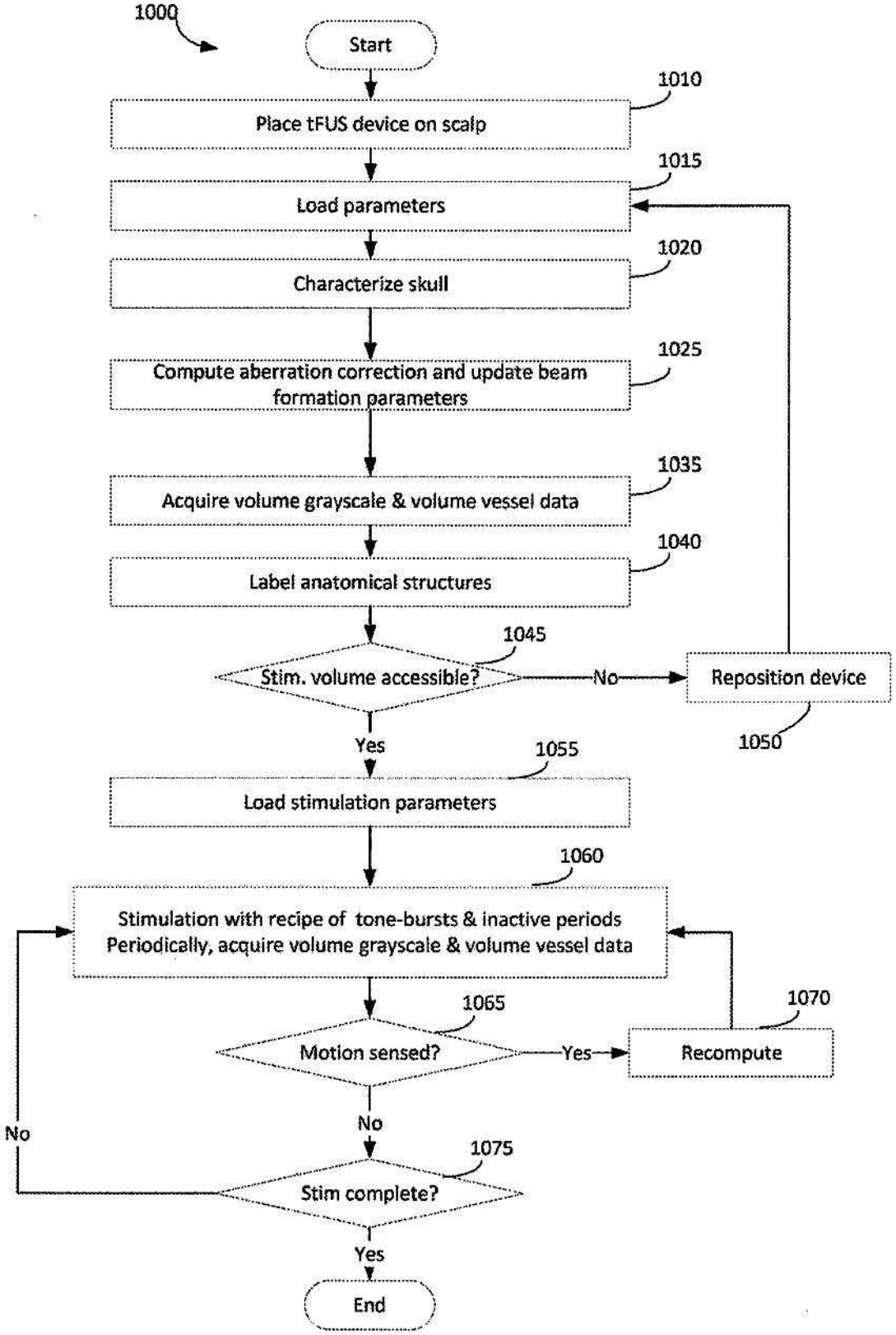
1000
Start
1010
Place tFUS device on scalp
1015
Load parameters
1020
Characterize skull
1025
Compute aberration correction and update beam formation parameters
1035
Acquire volume grayscale & volume vessel data
1040
Label anatomical structures
1045
Stim. volume accessible?
No
Reposition device
1050
Yes
1055
Load stimulation parameters
1060
Stimulation with recipe of tone-bursts & inactive periods
Periodically, acquire volume grayscale & volume vessel data
1065
Motion sensed?
Yes
Recompute
1070
No
No
1075
Stim complete?
Yes
End

Fig. 10

WEARABLE CLOSED LOOP TUS SYSTEM

CROSS-REFERENCE TO RELATED APPLICATIONS

[0001] This application claims priority benefit of the United States Provisional Patent Application titled "WEARABLE CLOSED LOOP TFUS SYSTEM," filed on Nov. 21, 2023, and having Ser. No. 63/601,577. The subject matter of this related application is hereby incorporated herein by reference.

TECHNICAL FIELD

[0002] This invention relates to transcranial ultrasound systems (TUS) as a wearable wellness device capable of operation in clinical and non-clinical settings.

BACKGROUND

[0003] TUS systems help treat several types of mental illness, but these systems do not guarantee that the ultrasound stimulation accurately reaches the anatomical targets. The skull's curvature and its variation in thickness obscure the ultrasound (US) delivery to the desired location, especially with small and deep targets such as the amygdala.

[0004] Matrix array systems can solve the problem of poor targeting by acquiring volume data sets of brain anatomy. Current solutions are targeted for clinically controlled usage, where a clinician defines the treatment for an illness. There is a need to expand the capabilities of TUS systems as a wellness device for individuals who want to improve their well-being, even if they do not have any medical diagnosis. Additionally, at-home medical treatment controlled by a physician has cost and convenience advantages over in-clinic procedures. For this, the TUS system needs to be in a wearable format. In addition to ensuring that wearable TUS systems correctly target the correct anatomical target safely, large cost, power, size, and weight reductions are required for the system to be in a wearable form factor.

BRIEF DESCRIPTION OF THE DRAWINGS

[0005] FIG. **1** shows a wearable TUS system **100** as per an embodiment.

[0006] FIG. **2** is an exemplary block diagram of TUS wearable **120** used in System **100**.

[0007] FIG. **3** shows an example of tile **240** comprising PMUT MEMS array **250** and ASIC **260**.

[0008] FIG. **4** shows an example ASIC **260** layout organized in a 16×8 grid.

[0009] FIG. **5** shows an example layout of one cell of MEMS **250** die.

[0010] FIG. **6** shows an exemplary block diagram of ASIC **260** as per an embodiment.

[0011] FIG. **7** shows an exemplary block diagram of Analog block **610** in ASIC **260**.

[0012] FIG. **8** shows an exemplary functional block diagram of the digital block **620**.

[0013] FIG. **9** shows an exemplary block diagram of DWE **810**.

[0014] FIG. **10** is an exemplary method **1000** for closed loop operation of TUS wearable **120**.

DETAILED DESCRIPTION

[0015] A TUS (transcranial ultrasound) system with a matrix array transducer in a wearable format is disclosed. The TUS system uses ASIC (application-specific integrated circuit) and MEMS (micro-electromechanical system) technologies to achieve power, size, and weight reductions, allowing the device to be worn. In an embodiment, the TUS system can reliably find a target anatomical structure and remain locked onto the target throughout usage. All real-time tasks are controlled locally within the TUS system for closed-loop operation.

[0016] In this invention, there are two loops which are closed. One is that the guidance measurements continuously update the wearable's knowledge of the location of the stimulation target or targets. That knowledge is used to modify the direction and focal length of the stimulation beam to render the target locked even as the subject moves. The second is that the timing of the stimulation may be controlled by information derived from EEG measurements. Safeguards enable subjects to use the system at home for medical treatment and wellness usage. A method for using the system is disclosed.

[0017] This application discloses a TUS system with a matrix array transducer in a wearable format. Two-dimensional rectangular arrays of transducer transducers are also known as matrix array transducers. Wearable devices are made possible by dramatic power, size, and weight reductions enabled by this invention. In an implementation, ASIC (application-specific integrated circuit) and MEMS (micro-electromechanical system) technology achieve the reductions, allowing the device to be worn. The MEMS die sits atop the ASIC with vertical interconnects in an implementation. In an embodiment, the MEMS device is inverted so that its active surface faces the active surface of the ASIC. The acoustic output comes from the back side of the MEMS die, which is at the top of the stack. Cavities are etched into the back side of the MEMS die using a process such as Deep Reactive Ion Etching (DRIE).

[0018] In an embodiment, the TUS system can reliably find a target and remain locked onto the target throughout usage. The TUS system sends and receives sound (ultrasound waves) in various directions, sequentially creating "beams." The beams can be controlled by a set of parameters stored in local memory (e.g., in a table format) and are referred to in this application as "beam lists." Upon receiving a "start" signal (from the subject via an app operating on a subject device such as a smartphone), all real-time tasks can be controlled locally within the wearable system (i.e., closed-loop operation). Safeguards in the system ensure that the TUS system can be used at home or in a clinic under a treatment protocol defined by a clinician. In a different embodiment, the TUS system is used by a subject who does not have any medical diagnosis but uses it to improve their well-being. In the wellness mode or application, a variety of preset protocols are available to a subject. In an embodiment, the TUS system includes physiological measurement capability using EEG (electroencephalogram), EOG (electrooculogram), EMG (Electromyography), or ECG (electrocardiogram) subsystems. The system includes algorithmic or machine learning functions for compensating the skull's acoustic effects and EEG biomarker detection in an embodiment. In an embodiment, the TUS system can connect to a cloud server where machine learning functions can be updated based on cloud computations.

[0019] The term "drum" refers to individual MEMS structures with vibrating suspended membranes that are actuated by piezoelectric thin films.

[0020] The term "element" refers to an autonomously acting acoustic structure composed of several "drums." All the drums in an element are wired in parallel within the MEMS die. The ASIC electronics connects to the whole element, not to individual drums.

[0021] The term "cell" refers to a group of "elements" whose electronics are repeated through an ASIC die. In one implementation, a cell controls the operation of five elements, comprising one transmitter and four receivers.

[0022] In an embodiment, the system can operate in three modes: channel, beam, and stim. Channel mode of operation can be used for skull characterization. The human skull varies in thickness, sound speed, and curvature, distorting ultrasound delivery to desired targets through attenuation, refraction, diffraction, and reflection. Channel mode is used to characterize the skull's effect on ultrasound transmission for all ultrasound transducer elements. The results from this operation are used to compensate for the effects of the skull for all ultrasound transducer elements. Beam mode operation can be used for mapping and targeting brain structures and anatomy characterization. In an embodiment, corrected element delays and amplitudes acquired in channel mode ensure the elements correctly target the desired anatomical structures. Stim (or stimulation) mode is used for treatment. Table 1 below summarizes the three modes of operation.

TABLE 1

Mode	TX beamformer operating?	RX signal chain operating?	RX beamformer operating?	Transmit Waveform	Usage
Channel	No	Yes	No	Short pulse centered at the highest operating frequency	For skull characterization
Beam	Yes	Yes	Yes	For grayscale, a short pulse. For mapping of cranial vessels, 4-16 cycle tone-burst.	For mapping and targeting brain structures and anatomy characterization
Stim	Yes	No	No	Long tone-burst (300-5000 cycles).	For treatment

[0023] There are differences between the transmit and receive beamforming operations in Beam mode. These differences mean that different parameters in the Beam List control them, as detailed below:

[0024] In the receive beamformer, time delays are applied to the channel data continuously so that the image is in focus at every point (a dynamic receive focus). As depth increases for each channel, the schedule of delay variation is parameterized in the Beam List.

[0025] Received data from all transducer elements are added together after appropriate delays are applied. This coherent summation may occur across tiles by "chaining" the tiles together.

[0026] In the transmit beamformer, in the simplest mode of operation, there is a single set of delays, one for each channel, which creates a focus at a fixed depth.

[0027] More advanced transmit beam formation for guidance can involve the transmission of plane waves at differing angles, data from which can be retrospectively combined to produce a dynamic transmit focus. In this confocal system, the transmitter and receiver are both in focus at each point in the image.

[0028] FIG. 1 shows a wearable TUS system **100** as per an embodiment. Referring to FIG. 1, subject **110** wears a TUS headband **120** (or TUS device) at a suitable location, ensuring proper contact with subject **110**'s scalp. Other wearable form factors such as a helmet to cover most of the scalp, half-helmet, half-headband, flexible cap, and visors are possible.

[0029] TUS system **100** includes a secure network device **130**. All communication with the TUS system is through the secure network device **130**. This allows for authentication and encryption of all communications, tamper detection, protection against side-channel attacks, and isolation of the subject device **140** and the internet from the operation of the TUS wearable **120**.

[0030] Headband **120** communicates with the secure network device **130** using a wireless **170** network such as Wi-Fi or Bluetooth in the preferred embodiment. In an embodiment, data from the ASIC **120** is encrypted before it reaches the ASIC pins, making unauthorized access to subject measurements very difficult. FPGA **210** or microcontroller **290** may perform other encryption and decryption. A wired network (Ethernet, USB, etc.) may be used for communication in a different embodiment. To maintain high security, subject **110** cannot install any software on secure network device **130**. Secure network device **130** will only allow safe commands into system **100** to ensure the safe use of wearable **120** and the safety of subject **110**. Network device **130** communicates with subject device **140**, such as a smartphone, tablet, laptop, smartwatch, computer, etc., using a wireless protocol such as Wi-Fi or Bluetooth. Subject **110** can control system **100**'s operation using an app on device **140**. Messages or other communications (data) from system **100** are displayed via the app on device **140**. Both network device **130** and subject device **140** are connected to a cloud server **150** via Internet **180**, allowing for authentication of

network device **130** and subject device **140**. Cloud Server **150** enables non-real-time aspects of system **100**, such as updates to the system's machine learning aspects, management of subject data, and over-the-air software updates. A clinician using portal **160** on server **150** may monitor the treatment and alter its course. In addition to ultrasound transducers, headband **120** may include an EEG sub-system. The EEG sub-system allows for monitoring the physiological efficacy of the system, such as the effect on the brain. Subject device **140** receives EEG and RX data. System **100** includes at least one physiological measurement capable system such as EOG (electrooculogram), EMG (Electromyography), or ECG (electrocardiogram) in a different implementation.

[0031] In an implementation, secure network device **130** includes a microprocessor supporting the necessary wireless protocols (Wi-Fi, Bluetooth, etc.). It translates the high-level instructions from subject device **140** or cloud server **150** into low-level commands to the TUS device or headband **120**. The instruction could include commands such as "start," "stop," target locations, treatment details, stimulation parameters, etc. Other non-real-time tasks are managed by device **130**. These tasks include authentication, encryption, tamper detection, protection against side-channel attacks, etc. An ASIC, off-the-shelf processor, or FPGA may be used for implementing device **130**. In a different implementation, the functionality of the device **130** is merged into the wearable **120**.

[0032] FIG. **2** is an exemplary block diagram **200** of TUS wearable **120** used in System **100**. Referring to FIG. **2**, device **120** consists of real-time (RT) control **210**. In the preferred embodiment, control **210** is implemented using an FPGA. Other implementations are possible, where control **210** is implemented using ASIC, microprocessors, etc. RT control **210** communicates with secure network device **130** using a wireless protocol such as Wi-Fi or Bluetooth or a wired interface such as USB.

[0033] Attached to RT control **210** are a number of tiles **240**. Each tile comprises MEMS device **250** (or MEMS die) and ASIC **260** (ASIC die or IC die). MEMS device **250** consists of a two-dimensional pMUT (Piezoelectric Micromachined Ultrasound Transducer) array transducer and is controlled by ASIC **260**. Other technologies, such as cMUT (capacitive micromachined ultrasonic transducers) or bulk piezoelectric transducers, can also be used. In block diagram **200**, only three tiles are shown to be connected. However, device **120** can consist of many such tiles positioned on different head parts. These tiles may be held in position by a flexible cap, with interconnection between the tiles achieved by flex circuits. The tiles, FPGA and other electronic components, and physiological sensors may be mounted on the flex, which is disposed of within the cap.

[0034] FIG. **3** shows an example of tile **240** in cross-section comprising pMUT MEMS array **250** and ASIC **260**. Referring to FIG. **3**, MEMS **250** and ASIC **260** are connected using one or more vertical connections **320**. FIG. **3** illustrates MEMS silicon die **250**, showing back-side etching at the top side and vibrating suspended membranes (called drums in this application) above the piezoelectric layer **310**. Piezoelectric layer **310** is a sandwiched layer comprising a layer of piezoelectric material such as PZT (Lead Zirconate titanate), AlN (Aluminum Nitride), or AlScN (Aluminum Scandium Nitride) with metal electrodes above and beneath it. FIG. **3** also shows the propagation or coupling medium **340** (for example, a gel) that ensures proper acoustic coupling from the MEMS drums to the subject **110**'s scalp. In FIG. **3**, subject **100**'s scalp is positioned above tile **240**, so the ultrasound waves labeled are directed into the head.

[0035] Referring back to FIG. **2**, attached to RT control **210** is a memory **220**. The memory **220** contains a list of beam parameters. In an embodiment, the beam parameters are stored in a tabular format. Memory **220** can be an external DRAM, SRAM, EEPROM, memory within the FPGA, etc. RT control **210** reads beam parameters from memory **220** and uses it to control tile **240**'s operation. Beam parameters may be downloaded into the memory from off-device storage during the start-up procedure.

Tiling or RX Chaining

[0036] Multiple tiles **240** can be connected. Each ASIC **260** within tile **240** can accept a digital input stream **280** from an adjacent ASIC. After appropriate delay and amplitude adjustment, the digital input stream **280** is summed with the beamformed RX data generated by the MEMS device **250** connected to the ASIC. The result of the summation is passed to the next tile's ASIC. The output **285** of the final tile **240** is sent to RT control **210**.

EEG Subsystem

[0037] In an embodiment, an EEG subsystem **230** is included in System **100**. EEG subsystem **230** can communicate directly to Secure Network device **130** in an embodiment. EEG subsystem **230** is used for monitoring the efficacy of treatment by monitoring the EEG signals for biomarkers. Care is taken to ensure that there is no mutual interference between the EEG subsystem **230** and the operation of ultrasound. This is practical because the EEG data is very slow compared to the ultrasound data: it has a frequency range of around 1-100 Hz, while the ultrasound data is in the low MHz range. Typically, the number of EEG channels will range from 3 to 64. EEG operation involves the passive reception of scalp electrical signals. This means it can be received directly by the microcontroller **290** (labeled μC) and does not need to connect to RT control **210**. The EEG requires signal conditioning circuitry (not shown), such as analog amplification and signal filtering, which may be implemented using commercially available devices. Alternatively, and advantageously as it reduces the package count, these electronics can be implemented in mixed-signal ASIC **260**.

[0038] FIG. **4** shows an example ASIC **260** layout **400** in a 16×8 grid. Referring to FIG. **4**, layout **400** consists of 128 cells arranged in a 16×8 grid. In an embodiment, the cell consists of 1 transmit element and 4 receive elements. The cell's analog functions include 4 LNAs (low-noise amplifiers), eight mixers to produce in-phase and quadrature band-band outputs for each receive element, two analog summers, and 2 A/Ds (Analog-to-digital converters). A level shifter, an output stage, and digital logic are needed for the transmitter. Preferably, the functional digital pads on ASIC **260** are located on two sides only, which helps reduce the gap between transducers. This improves both transmit and receive performance.

MEMS

[0039] FIG. **5** shows an example layout of one cell of MEMS **250** die. Referring to FIG. **5**, the MEMS **250** die

consists of four receive **510** sections with a centrally placed transmit **520** section in an embodiment. Separating transmit **520** and receive regions **510**, as shown, simplifies the implementation in the ASIC **260** by removing the need for any transmit/receive switching logic. Each of the five sections is connected to the ASIC **260**. Each of the receive **510** regions consists of several "drums." The transmit **520** region consists of several "drums." The number of drums for each RX and TX can be fine-tuned in an implementation. Multiple drums are connected parallelly on the MEMS die to form the transmit and receive elements. In an embodiment, the receive **510** sections can operate at a different frequency from the transmit **520** sections (for example, RX frequency is twice (2×) the TX frequency). The example layout shown allows the receive elements to be packed more finely to allow the receive **510** sections to operate at a higher frequency than the transmit **520** sections. Other layouts with a different number of receive **510** sections and transmit **520** sections and in different geometrical arrangements are possible.

ASIC

[0040] FIG. **6** shows an exemplary block diagram of the ASIC **260** cell as per an embodiment. Referring to FIG. **6**, the ASIC **260** cell consists of an analog block **610** and a digital block **620**. The area of the ASIC cell may match that of the MEMS cell. If the ASIC cell area does not match the MEMS cell, an interposer may be placed between the two die to enable connection from elements to ASIC receive inputs and transmit outputs.

Analog Block

[0041] Analog block **610** connects to a MEMS **250** cell using interconnects **320**. Analog block **610** converts the received analog signal from MEMS **250** into a digital signal and provides it to the digital block **620**. The transmit section inside the Analog block **610** takes input signals from the digital block **620**, which has the correct timing and pulse train for one of the three types of operation in Table 1. It converts them into an analog signal to drive MEMS **250**.

[0042] FIG. **7** shows an exemplary block diagram of Analog block **610** in the ASIC **260** cell. Referring to FIG. **7**, receive analog functions for RX0 MEMS **510** include LNAs **720** (low-noise amplifiers), two mixers **730**, two analog summers **740**, and 2 A/Ds **750** (Analog-to-digital converters, sigma-delta ADCs may advantageously be used) for the receiver. The identical LNA and mixers for the other three receive elements in the cell, labeled RX1, RX2, and RX3, are not shown. The analog receive function down-converts the received signal to baseband for the following reasons:

[0043] Four channels can be combined after very simple phase adjustments to the local oscillator, so each cell requires only two ADCs instead of four. A factor $f0/\Delta f$ decreases the me and Q ADC bandwidths compared with an RF approach, where Δf is the transducer's bandwidth and f0 is its center frequency.

[0044] The digital beam formation logic needs only to service 128 data channels rather than 512.

[0045] In one implementation, the analog transmit section takes 128 input signals from the digital block with the correct timing. It consists of a level shifter **760** (for shifting output voltage to an appropriate voltage for the transmit element) and an output stage **770**. In an embodiment, output stage **770** supports a three-level output of +V, +V/2, and GND to supply symmetrical waveforms around +V/2. This ensures that the transmit circuit actively returns to a resting voltage of +V/2. In an implementation, the "Ground" electrode common to all MEMS elements is held either at ground or at a bias voltage chosen to ensure that the field across the piezoelectric film never inverts and is always in the same direction as its poling. This optimizes the reliability of the film. In one implementation, operating frequencies vary between 0.5 to 3.0 MHz. Some examples of signals transmitted include:

[0046] Channel mode operation: Short, symmetrical 1-cycle or 2-cycle bursts at maximum output voltage to be used for skull characterization.

[0047] Beam mode operation:

[0048] For grayscale, short pulse centered at a lower frequency, with reception of 2nd harmonic via, e.g., pulse inversion signaling.

[0049] For mapping of cranial vessels, 4-8 cycle tone-burst centered at mid-band frequency.

[0050] Stim Mode Operation: Long tone-burst (100-5000 cycles) centered between 0.5-2.0 MHz.

[0051] Typically, the transmit waveforms' rise and fall times are matched, and the delay quantization of transmit beamforming is around 75 ns.

Digital Block

[0052] The functions of the digital block are:

[0053] Provision of "dynamic" delays to the received signals, that is, delays that change with the depth the sound is returning from. This delay needs to account for how groups of elements have been combined in analog. Due to the need for fractional-sample delays, the delay is applied in coarse and fine stages. In one implementation, CORDIC (coordinate rotation digital computer) rotation is used for fine delays. A decimation filter is used in a different implementation, where the start and stop addresses are adjusted.

[0054] Control of each channel's signal amplitude as a function of depth.

[0055] Summation of channel data after the above delay and amplitude processing.

[0056] Provision for adjustment of delay and amplitude to compensate for the aberrating effects of the skull.

[0057] Ability to accept digital data from another ASIC, delay it, and sum with the beamformed data produced from the received elements. This allows tiles to be "chained."

[0058] Creation of digital signals with the correct timing for each analog transmit section. These are delayed from the start signal by an amount with a geometrical component and a correction component based on skull measurements.

[0059] Ability to operate in (1) normal beamforming mode, where channels are combined after delay and amplitude adjustment, (2) a channel mode, where data is not beamformed. This "channel" mode helps characterize the skull, and (3) in the stim mode.

[0060] FIG. **8** shows an exemplary functional block diagram of the digital block **620**. The core of the digital block **620** is the Delay Weight Element (DWE) **810** subsystem. This subsystem, detailed further in FIG. **9**, creates correctly timed signals to be fed into the transmitter analog function. The receiver section receives data supplied to it from the

baseband ADC outputs and carries out digital operations, resulting in the data's beam formation. Referring to FIG. **8**, in an embodiment, digital block **620** comprises 128 Delay Weight Elements **810**, Interconnect **820**, Channel Adder tree **830**, FIFO and Beam Adder **870**, 16 LVDS transmit **860** & 16 LVDS receive **880** pairs, a QSPI slave interface **850**, and global logic block **840**. The global logic block (among other functions) is responsible for taking the representations of beam direction and focal parameters supplied to it from the Beam List and computing the low-level parameters stored in memories **960** and **940**.

[0061] LVDS transmit **860** and LVDS receive **880** are used for tile chaining. The received LVDS data is delayed in the FIFO **870** before being added to the tile's data in Beam Add section **870** and sent to the next tile in the chain via LVDS TX **860**.

[0062] Analog data is received from analog block **610**, and a dynamic delay as a function of depth is applied by the delay weight element **810**. The delay weight element also adjusts, again as a function of depth, the amplitude of the channel data. After appropriately adjusting the amplitude and delay of the channel data, it is fed to the channel adder tree **830** for summation. QSPI slave **850** provides an interface to the RT control **210**. RT control **210** uses this interface to provide a beam list and other control information. Global logic provides overall control to the digital block **840** and interconnect **820** provides on-chip interconnect between the various functional blocks.

Delay Weight Element (DWE)

[0063] FIG. **9** shows an exemplary block diagram of DWE **810**. The transmit delays specified in the beam list are implemented in the TX Delay Circuit block **955**. These delays can be implemented using a memory or by other techniques.

[0064] The dynamic receive processing is more complex since the delays and weights must change with depth. Values of delay and amplitude to be applied to the data at certain depths are stored in memories **960** and **940**. Logic in blocks **945** and **935** allows interpolated delays and weights to be applied at depths between those specified in memories **960** and **940**.

[0065] The signal path for the delay weight element begins with the digital filter and decimator **910**. Here, the ADC output is filtered to remove out-of-band noise, and the sampling rate is reduced to the lowest value consistent with adequate sampling of the baseband data. After this, a coarse delay is implemented through the write and read addresses of the delay memory **915**. Generation of the read address, which varies with depth, is accomplished by block **920**. Fractional delays may be implemented using an interpolator and logic **945**. Further fine control of the signal phase may be implemented using the phase adjustment logic **925**. After this processing, the received signals from a point target will be time-aligned across all channels and ready for summation. Before the summation, a multiplier **930** implements the apodize or weighting operation. This is driven by the weight interpolation logic **935** from data in memory **940**.

Closed Loop TUS Method

[0066] FIG. **10** is an exemplary method **1000** for closed loop operation of TUS wearable **120**. Method **1000** can be performed using System **100**. Method **1000** can correct skull aberrations, determine if device **120** is placed at the correct location, and if the device has shifted or moved while in use. Referring to FIG. **10**, in operation **1010**, wearable device **120** is placed on the scalp of subject **110**.

[0067] In operation **1015**, various operational parameters, such as the beam list, are loaded into the wearable. For example, RT control **210** loads the beam list from Memory **220** and provides it to ASICs **260** along with control information.

[0068] In operation **1020**, device **120** is operated in "channel" mode for skull characterization. As described earlier, various characteristics of the human skull complicate ultrasound delivery to desired targets. In this operation, the method characterizes the skull's effects on ultrasound for each transducer element. In this operation, the TUS device's transducer elements transmit a short pulse at a suitable center frequency. Received data are captured with RX beamforming turned off, and the data are used to characterize the subject's skull.

[0069] In operation **1025**, the received and transmitted data from operation **1020** are analyzed to determine the skull's effects, and appropriate correction parameters are computed for each transducer element. Beam formation parameters for all transducer elements are updated.

[0070] In operation **1035**, the method maps and targets brain structures (or anatomy characterization) with the device operating in "Beam" mode. First, a volume grayscale image (2-D image) of the brain structures is acquired, followed by acquiring volume vessel data (blood flow) using Doppler processing.

[0071] In operation **1040**, the method using pattern recognition, machine learning, or any suitable algorithms determines or labels the information acquired in Operation **1035** (brain structures and volume vessel data). This helps to determine if the device is placed correctly on the subject's scalp and, assuming adequate positioning, allows the stimulation to be targeted.

[0072] In operation **1045**, the method determines if the stimulation target is accessible based on device **120**'s location on subject **110**'s scalp. If the target(s) are inaccessible, the following operation in the method is Operation **1050**. If the target(s) are accessible, the following operation is Operation **1055**.

[0073] In operation **1050**, a message is sent to subject **110** from device **120** to reposition the device. For example, the message via secure network device **130** may be displayed on the app on subject device **140**. The method proceeds to Operation **1015**.

[0074] In operation **1055**, stimulation parameters are loaded. In wellness mode, a variety of preset stimulation waveforms are available to a subject. In medical treatment mode, a clinician will specify the stimulation waveform and other parameters such as treatment length, burst length, time between bursts, etc. For example, the real-time control loads the beam list from Memory **220** and provides it to ASICs **260** along with control information. Steering and focusing information for all TX transducer elements is calculated. This includes a set of delays for each transducer element and, potentially, parameters enabling advanced beam formation involving plane wave transmission at differing angles.

[0075] In operation **1060**, stimulation is started. Stimulation waveforms are long tone bursts (300 to 5000 cycles) centered at a suitable stimulation frequency, interspersed

with inactive periods. Stimulation waveform parameters such as tone burst duration, pulse repetition frequency, acoustic frequency, amplitude intensity, etc., are determined by a clinician's treatment plan (or recipe). Device **120** ensures that no stimulation waveform parameters are beyond a safe range and that subject **110** cannot change stimulation waveform parameters to unsafe levels. Periodically, device **120** acquires grayscale and vessel data. For example, the device may acquire grayscale and vessel data after every 1/(pulse repetition frequency) or a multiple of 1/(pulse repetition frequency). Periodically acquiring grayscale and vessel data helps determine if headband **120** shifted while in use.

[0076] In operation **1065**, using cross-correlation or other algorithms on sequentially acquired grayscale and vessel data, it is determined whether significant relative motion between the device or headband **120** and subject **110**'s scalp occurred. Significant relative motion between the device and the subject's scalp could cause ineffective stimulation since the stimulation beam may no longer be directed to the target tissue. If motion is sensed, the following operation is Operation **1070**. If there was no significant movement, the following operation is Operation **1075**.

[0077] In operation **1070**, steering and focusing information for all TX transducer elements is recalculated. Method **1000** proceeds to operation **1060**.

[0078] In operation **1075**, Method **1000** checks if stimulation is complete. Stimulation could end due to an explicit command (from the subject) or because the prescribed NTB (number of tone bursts) is over. If the stimulation is incomplete, the method proceeds to operation **1060**; otherwise, the method ends.

What is claimed is:

1. A system comprising:

a headband device comprising one or more transcranial ultrasound (TUS) tiles, wherein each of the TUS tiles further comprises a plurality of transducer elements connected to an integrated circuit; and

a computing device in wireless communication with the headband device, the computing device generating a stimulation signal specification and transmitting the stimulation signal specification to the headband device, wherein the TUS tiles output the stimulation signal via the headband device.

2. The system of claim **1**, wherein the TUS tiles further comprise a matrix of TUS tiles.

3. The system of claim **1**, wherein the headband device further comprises at least one physiological measurement subsystem.

4. The system of claim **1**, wherein the computing device performs authentication, encryption, tamper detection, and side-channel attack protection on behalf of the headband device.

5. The system of claim **1**, further comprising a real-time control circuit coupled to the headband device, wherein the real-time control circuit reads beam parameters from a memory causing the TUS tiles to output a beam according to the beam parameters.

6. The system of claim **5**, wherein the real-time control circuit causes the headband device to operate in a channel mode, a beam mode, or a stimulation mode.

7. The system of claim **6**, wherein in the channel mode the real-time control circuit causes the headband device to obtain skull characterization data using the TUS tiles, wherein the computing device generates skull compensation parameters based on the skull characterization data.

8. The system of claim **7**, wherein in the beam mode, the real-time control circuit determines whether the headband device is targeted at a desired anatomical structure based on the skull characterization and anatomy characterization data.

9. The system of claim **7**, wherein in the beam mode, the computing device detects blood flow or a blood vessel location based upon the skull characterization data.

10. The system of claim **7**, wherein the real-time control circuit, in the channel mode, causes the TUS tiles to communicate with an adjacent tile in an array of tiles and wherein the real-time control circuit disables transmit or receive beamforming.

11. The system of claim **6**, wherein the real-time control circuit causes the headband device to output a stimulation beam.

12. The system of claim **1**, wherein the TUS tiles are arranged in an array and electrically coupled with adjacent tiles in the array.

13. The system of claim **1**, further comprising a memory storing control parameters for the headband device, wherein the control parameters define beam parameters for a plurality of operational modes.

14. The system of claim **1**, wherein the TUS tile comprises a micro-electromechanical system (MEMS) device, the MEMS device comprising at least one of a Piezoelectric Micromachined Ultrasound Transducer (pMUT) or a capacitive micromachined ultrasonic transducers (cMUT).

15. The system of claim **1**, wherein the MEMS device further comprises at least one receive portion and a transmit portion, wherein the transmit portion is electrically separated from the at least one receive portion.

16. The system of claim **1**, wherein the MEMS device is electrically coupled to an integrated circuit.

17. The system of claim **16**, wherein the integrated circuit comprises an analog block and a digital block.

18. The system of claim **17**, wherein the analog block receives data from at least one receive portion of the MEMS device and transmits data to the transmit portion of the MEMS device.

19. The system of claim **18**, wherein the integrated circuit comprises at least one of a LNA, summers, sigma-delta ADC, level shifter, or output stage.

20. A method comprising:

placing a headband device comprising a plurality of transcranial ultrasound (TUS) tiles on a subject scalp;

obtaining TUS parameters from a memory, the TUS parameters specifying an operational mode of the TUS tiles;

obtaining skull characterization parameters from the TUS tiles based on the TUS parameters;

calculating skull aberration correction parameters based on the skull characterization data;

adjusting the TUS parameters based on the skull aberration correction parameters; and

generating a stimulation signal based on the adjusted TUS parameters, wherein the TUS files emit the stimulation signal via the headband device.

21. The method of claim **20**, further comprising generating volume grayscale data or vessel data to visualize a skull or blood vessel.

22. The method of claim **21**, further comprising verifying positioning of the headband device based on the volume grayscale data or vessel data.

23. The method of claim **22**, further comprising emitting the stimulation signal in response to verifying positioning of the headband device.

24. The method of claim **21**, further comprising:

determining, based on the volume grayscale data or vessel data, whether relative motion exceeding a threshold between the headband device and the subject scalp occurred; and

generating a message to reposition the headband device in response to the determination.

* * * * *