US 20140169643A1

(19) United States
(12) Patent Application Publication
Todoroki
(10) Pub. No.: US 2014/0169643 A1
(43) Pub. Date: Jun. 19, 2014

(54) FACE AUTHENTICATION SYSTEM, FACE AUTHENTICATION METHOD, AND FACE AUTHENTICATION PROGRAM

(76) Inventor: **Yasuhiro Todoroki**, Tokyo (JP)

(21) Appl. No.: **13/695,248**

(22) PCT Filed: **Sep. 5, 2011**

(86) PCT No.: **PCT/JP11/70188**

§ 371 (c)(1),
(2), (4) Date: **Oct. 29, 2012**

Publication Classification

(51) **Int. Cl.**
G06K 9/00 (2006.01)

(52) **U.S. Cl.**
CPC *G06K 9/00248* (2013.01)
USPC **382/118**

(57) **ABSTRACT**

Provided is a face authentication system (**100**) including a reflectance image generating unit (**107**) for generating a blurred image of an input image based on the input image including a face of a person and generating an input reflectance image by separating each corresponding pixel value of the blurred image from each pixel value of the input image, and a face authenticating unit (**112**) for performing face authentication of the face of the person included in the input image by comparing the input reflectance image with a registered reflectance image of a previously registered person.

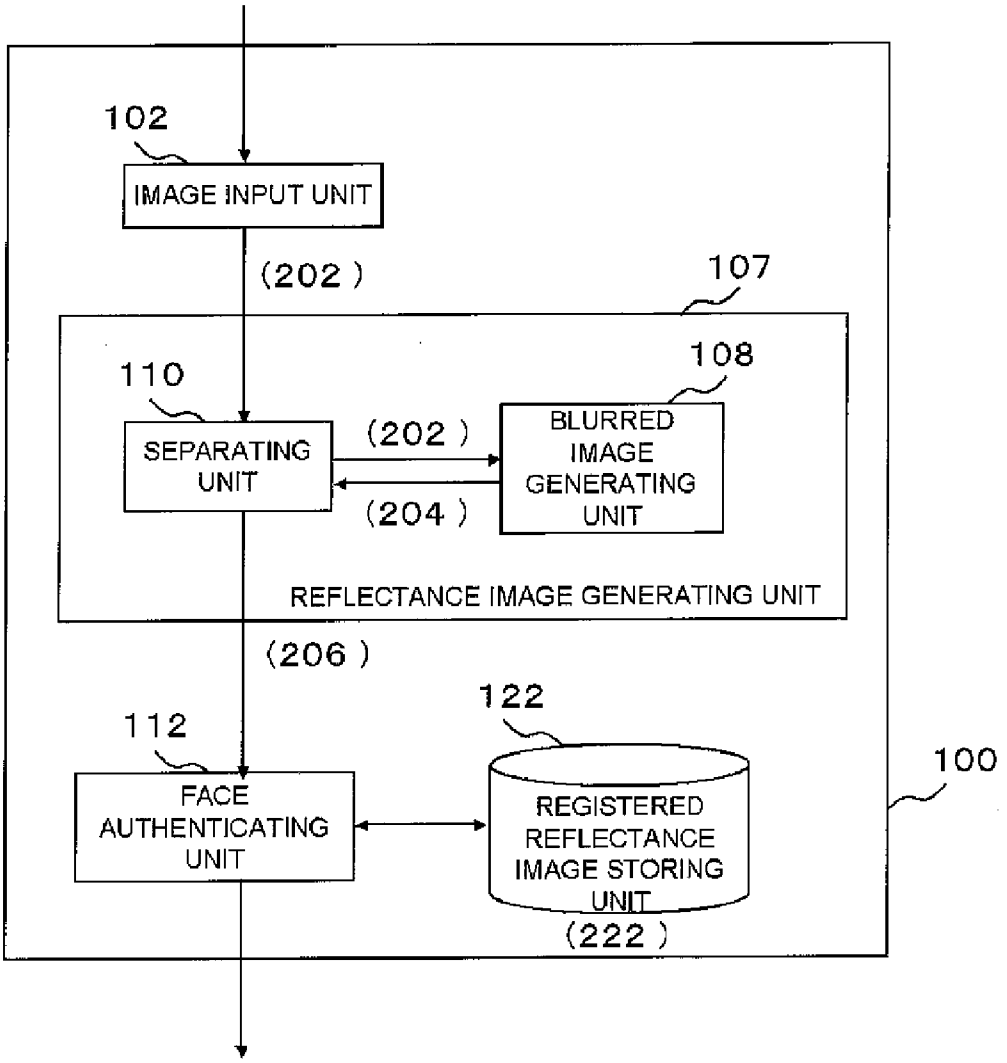

FACETEC EXHIBIT 2018
JUMIO v. FACETEC
IPR2025-00107

FIG. 1

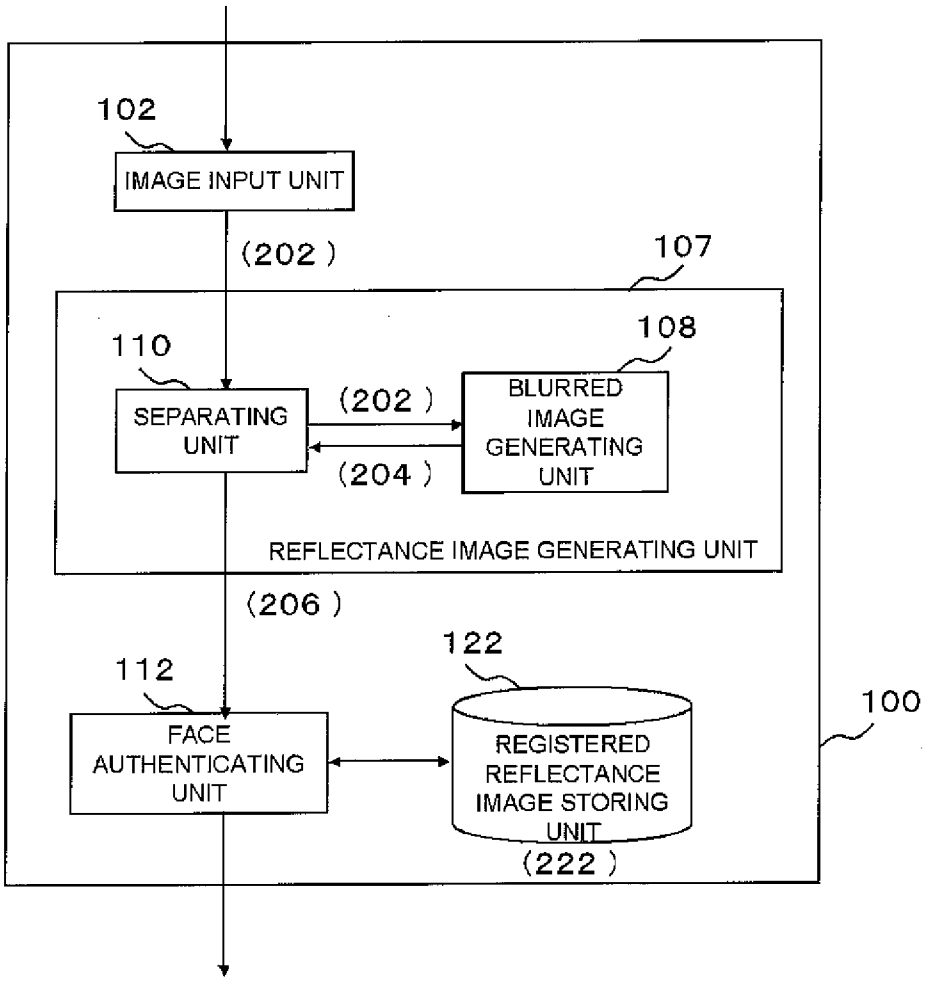
102
IMAGE INPUT UNIT
(202)
107
110
108
SEPARATING UNIT
(202)
BLURRED IMAGE GENERATING UNIT
(204)
REFLECTANCE IMAGE GENERATING UNIT
(206)
122
112
100
FACE AUTHENTICATING UNIT
REGISTERED REFLECTANCE IMAGE STORING UNIT
(222)

FIG.2

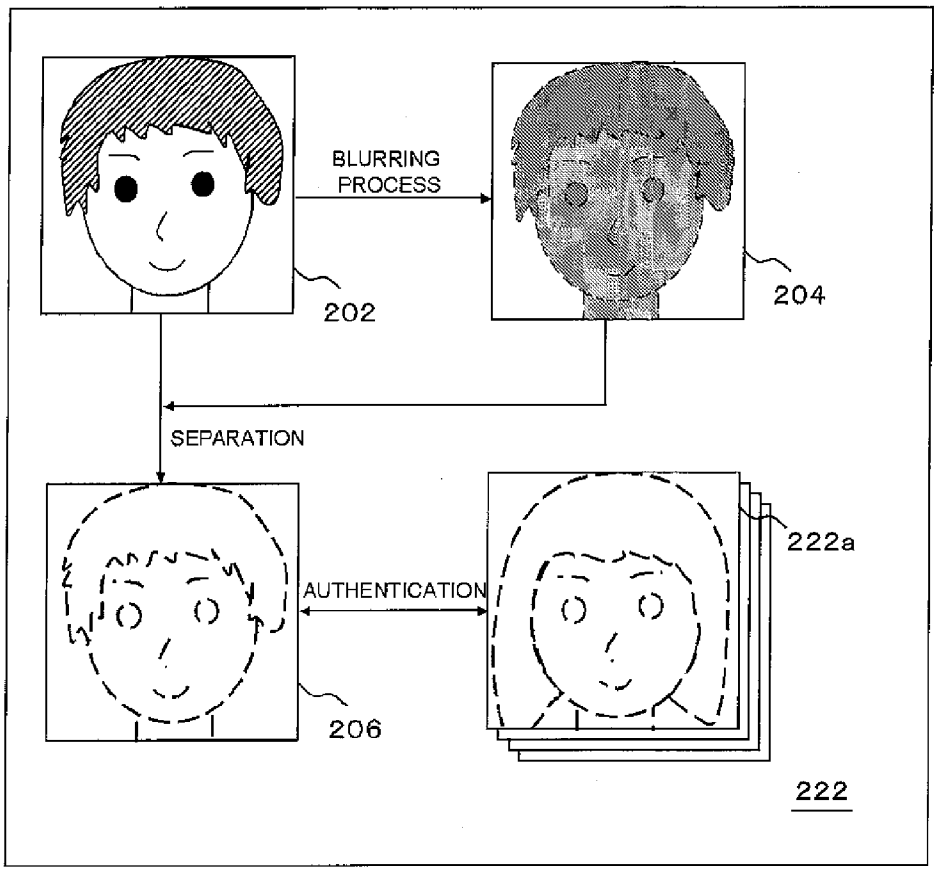
BLURRING
PROCESS
202
204
SEPARATION
AUTHENTICATION
206
222a
222

FIG.3

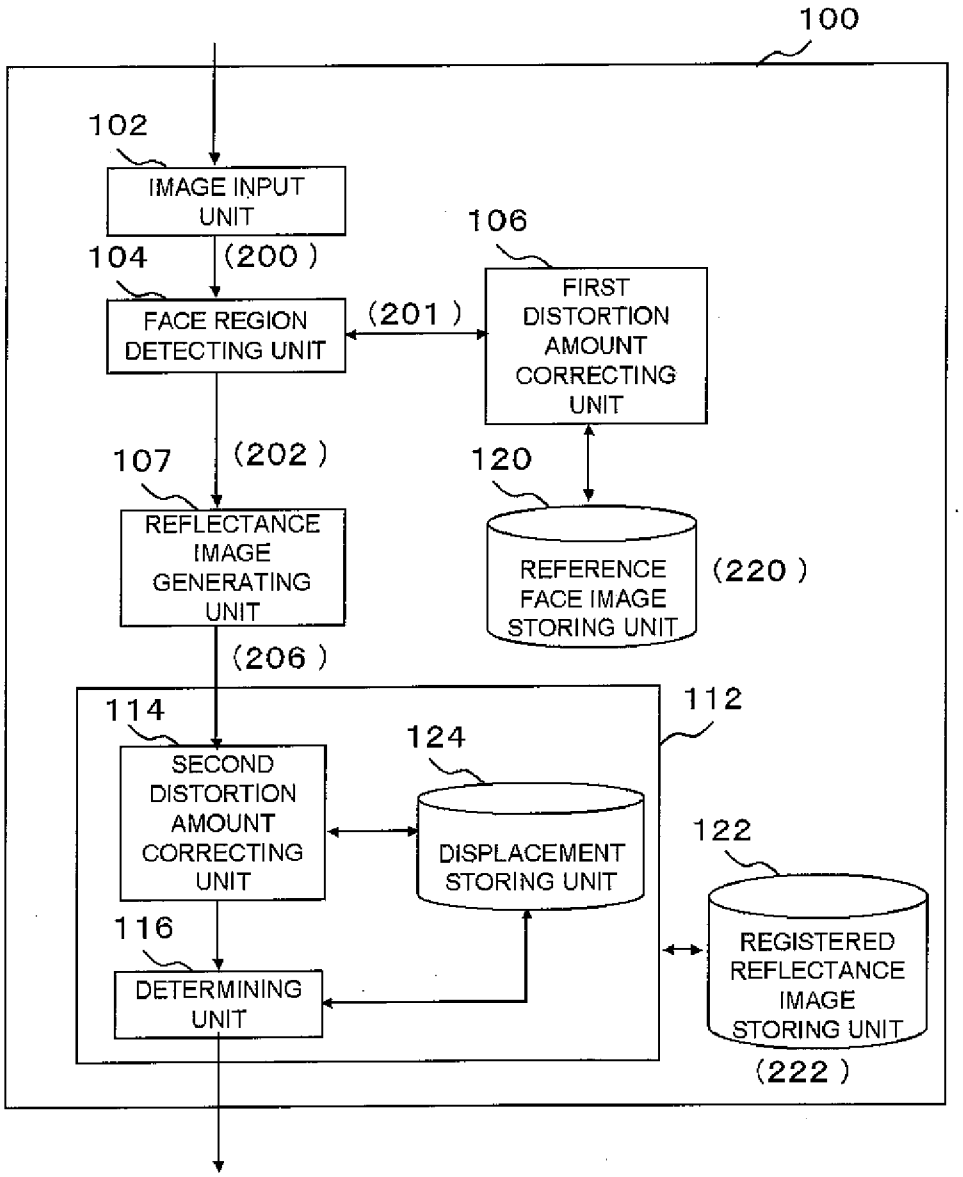
100
102
IMAGE INPUT UNIT
(200)
104
FACE REGION DETECTING UNIT
(201)
106
FIRST DISTORTION AMOUNT CORRECTING UNIT
107
(202)
REFLECTANCE IMAGE GENERATING UNIT
120
REFERENCE FACE IMAGE STORING UNIT
(220)
(206)
112
114
SECOND DISTORTION AMOUNT CORRECTING UNIT
124
DISPLACEMENT STORING UNIT
122
116
DETERMINING UNIT
REGISTERED REFLECTANCE IMAGE STORING UNIT
(222)

FIG.4

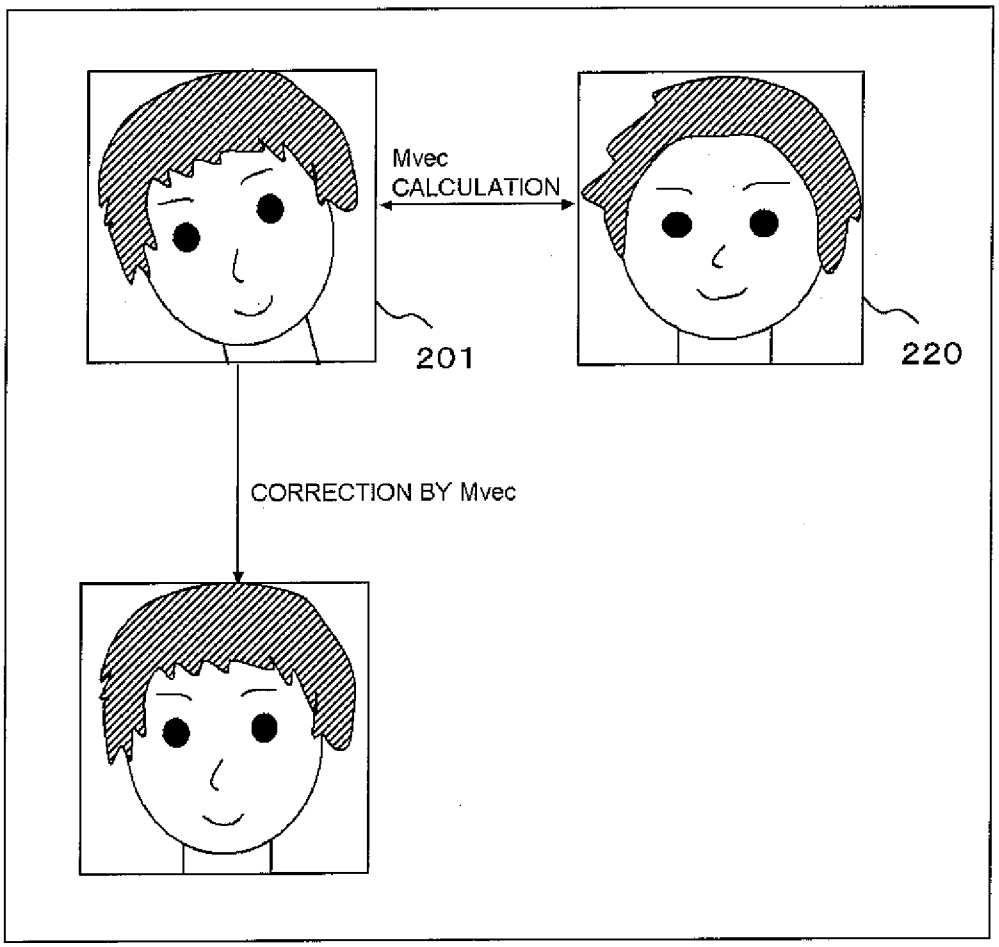

FIG.5

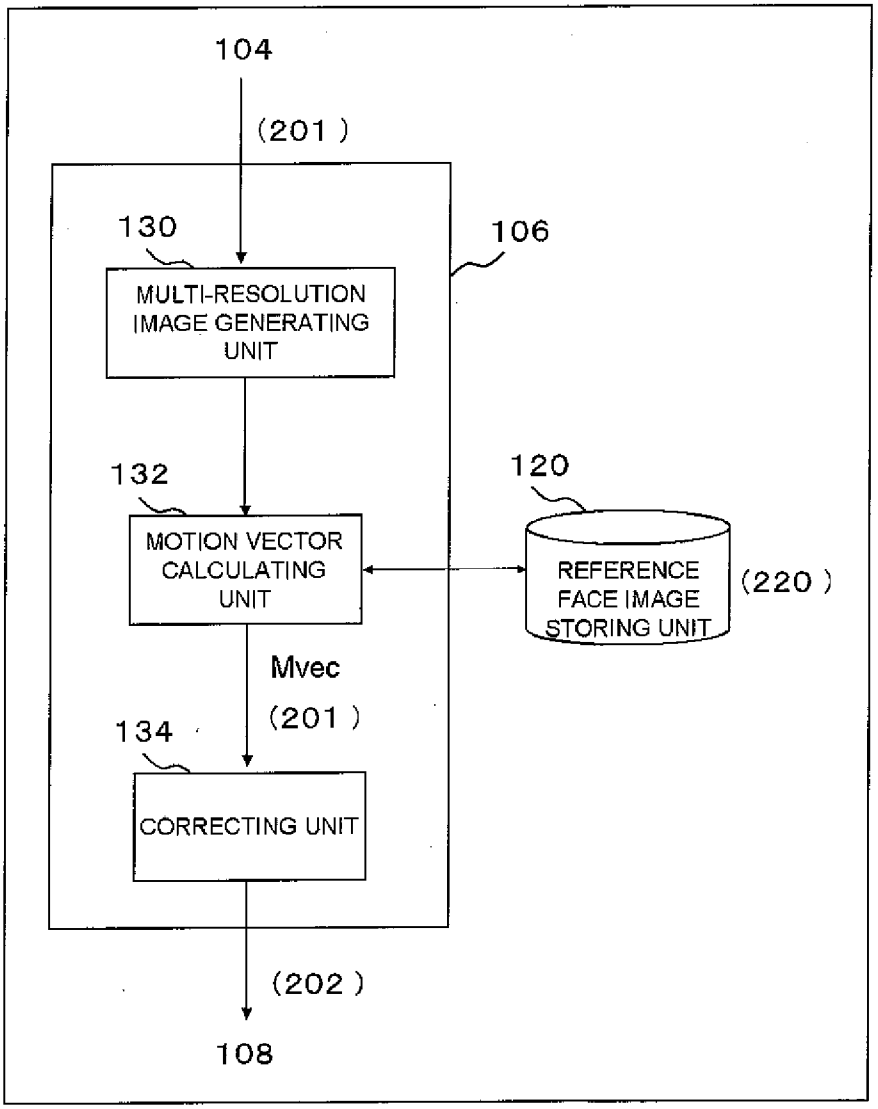

FIG.6

REGISTERED REFLECTANCE IMAGE	DISPLACEMENT
222a	(+1, +1)
222b	(+2, +2)
222c	(-2, -1)
:	:

124

FIG. 7

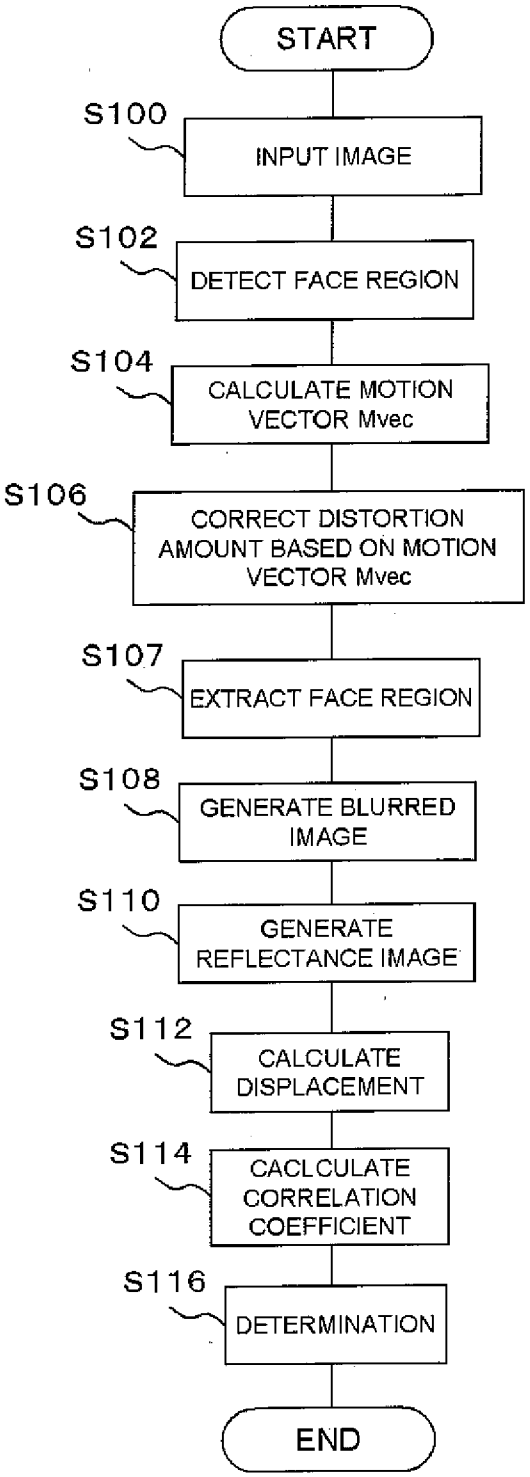
START
S100
INPUT IMAGE
S102
DETECT FACE REGION
S104
CALCULATE MOTION VECTOR Mvec
S106
CORRECT DISTORTION AMOUNT BASED ON MOTION VECTOR Mvec
S107
EXTRACT FACE REGION
S108
GENERATE BLURRED IMAGE
S110
GENERATE REFLECTANCE IMAGE
S112
CALCULATE DISPLACEMENT
S114
CACLCULATE CORRELATION COEFFICIENT
S116
DETERMINATION
END

FIG.8

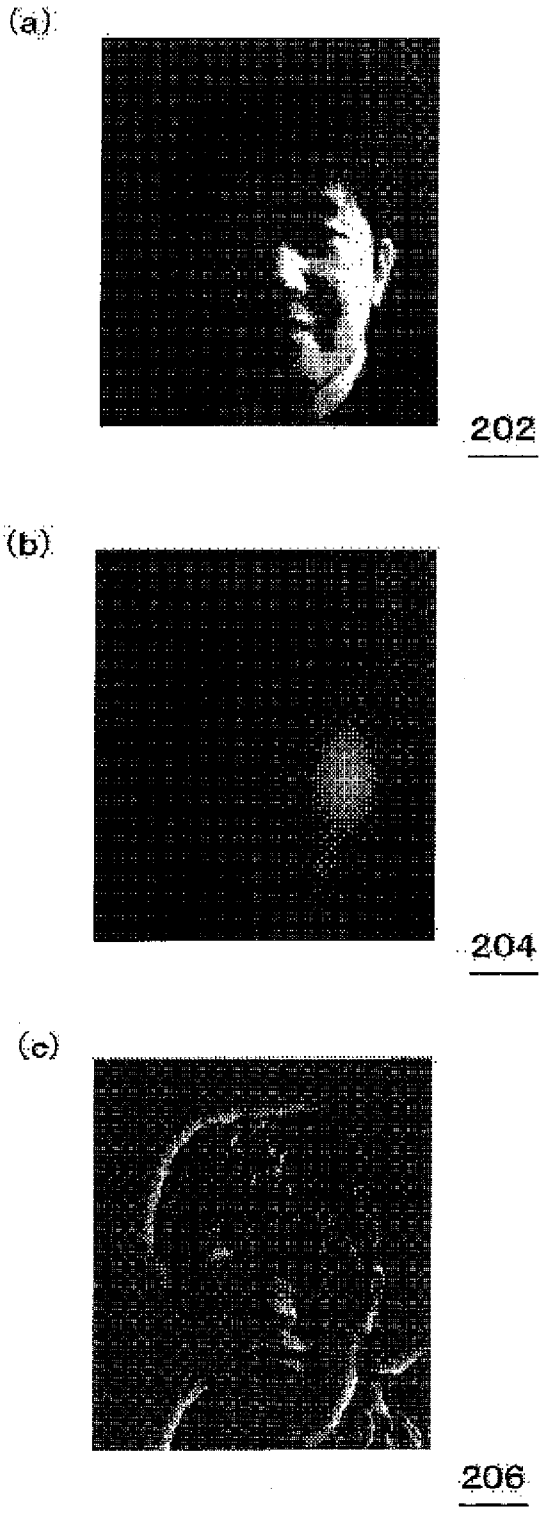

FIG.9

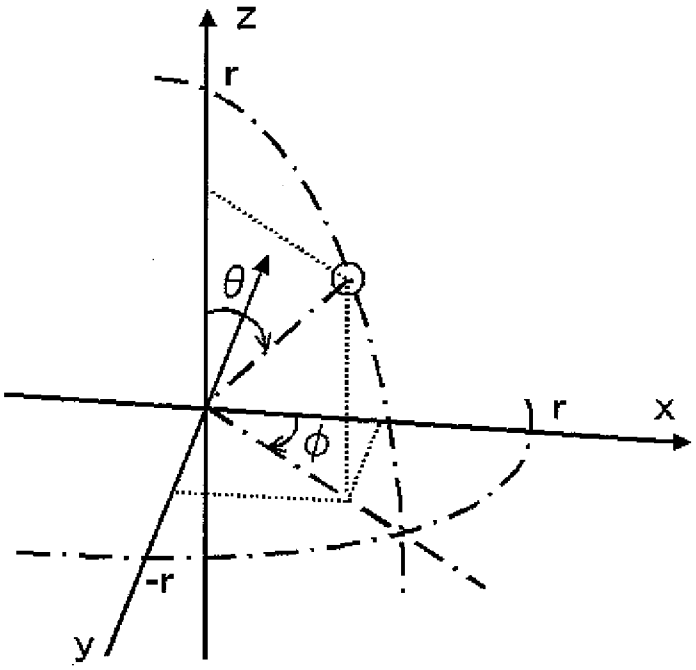

FIG.10

(a)

−1	−2	−1
0	0	0
1	2	1

(b)

−1	0	1
−2	0	2
−1	0	1

FACE AUTHENTICATION SYSTEM, FACE AUTHENTICATION METHOD, AND FACE AUTHENTICATION PROGRAM

TECHNICAL FIELD

[0001] The present invention relates to a face authentication system, a face authentication method, and a face authentication program.

BACKGROUND ART

[0002] In order to authenticate a person's identity, face authentication processes for obtaining a face image of a person and comparing the face image with a previously registered face image of a registrant have been being developed. In the case where images are compared for authentication, it is problematic that the facial features may be altered due to the influence of oblique lighting or illumination effects such as the shade of a tree when the face image of a person is obtained, and therefore the authentication may not be accurately performed.

[0003] Patent Literature 1 (Japanese Unexamined Patent Publication No. 2007-140723) discloses a technique of calculating a lighting angle of an input image, selecting a filter based on the calculated angle, and defining the facial features of a person extracted from the input image, using the selected filter. Here, said literature discloses that a Gabor filter is used for extracting features, as a Gabor filter is selected in consideration of the size and direction of a lighting angle of each block.

[0004] In addition, Patent Literature 2 (Japanese Unexamined Patent Publication H11-306348) discloses a technique of designating, when detecting a subject of recognition target such as face, local comparison regions such as eye, nose, lip with respect to an input image in order, normalizing brightness of the designated local comparison regions, and then partially obtaining determination factors with respect to the local comparison regions. Thereby, it is said that a subject of recognition target may be detected without being seriously influenced by the change of environments such as a light source.

[0005] Patent Literature 3 (Japanese Unexamined Patent Publication No. 2008-9745) discloses a face detection technique using an edge detection filter to detect a face from an image from which the influence of an illumination light is removed.

[0006] Patent Literature 4 (Japanese Unexamined Patent Publication No. 2009-151539) discloses a technique of determining whether each image of face detection target has a shadow or not and removing the shadow from a cut image which is determined as having a shadow.

RELATED LITERATURES

Patent Literatures

[0007] Patent Literature 1: Japanese Unexamined Patent Publication No. 2007-140723

[0008] Patent Literature 2: Japanese Unexamined Patent Publication H11-306348

[0009] Patent Literature 3: Japanese Unexamined Patent Publication No. 2008-9745

[0010] Patent Literature 4: Japanese Unexamined Patent Publication No. 2009-151539

[0011] Patent Literature 5: Japanese Unexamined Patent Publication No. 2010-193199

[0012] Patent Literature 6: U.S. Pat. No. 7,847,823

[0013] Patent Literature 7: U.S. Pat. No. 7,773,819

SUMMARY OF THE INVENTION

Technical Problem

[0014] However, when face authentication is conducted, in the technique of performing local correction of a specific portion as disclosed in Patent Literature 1 or Patent Literature 2, the information from an area other than the specific portion, for example a less prominent portion of skin of the face, may not be used, and therefore it is impossible to perform accurate authentication.

[0015] In addition, in the technique of using the edge detection filter as disclosed in Patent Literature 3 or in the technique of determining the presence of a shadow as disclosed in Patent Literature 4 for a portion, at a gentle slope portion in pixel values of adjacent pixels, for example a skin portion of a face, it is difficult to satisfactorily remove the influence of an illuminating light source.

[0016] The inventor has carefully reviewed the techniques of enhancing authentication accuracy when performing face authentication, and it is found that the inherent facial features of a person can be accurately extracted without being influenced by various photographic environments including an illumination source by using a reflectance component of person's face.

[0017] Here, the Retinex theory, an original image photographed by a photographing device such as a camera is composed of an illumination light component and a reflectance component, is known. For example, Patent Literature 5 (Japanese Unexamined Patent Publication No. 2010-193199) discloses that a corrected image having an improved contrast is obtained by correcting an input image by means of the Retinex theory.

[0018] The present invention is designed in consideration of the above, and the present invention is directed to providing a technique capable of satisfactorily removing the influence of photographic environments from an input image and a registered image when face authentication is performed, and capable of performing an authentication process with high accuracy.

Technical Solution

[0019] In one general aspect, the present invention provides a face authentication system, which includes: a reflectance image generating unit for generating a blurred image of an input image based on the input image including a face of a person and generating an input reflectance image by separating each corresponding pixel value of the blurred image from each pixel value of the input image; and a face authenticating unit for performing face authentication of the face of the person included in the input image by comparing the input reflectance image with a registered reflectance image of a previously registered person.

[0020] In another aspect, the present invention provides a face authentication method which includes: generating a blurred image of an input image based on the input image including a face of a person and generating an input reflectance image by separating each corresponding pixel value of the blurred image from each pixel value of the input image;

and performing face authentication of the face of the person included in the input image by comparing the input reflectance image with a registered reflectance image of a previously registered person.

[0021] In another aspect, the present invention provides a face authentication program which allows a computer to function as: a reflectance image generating means for generating a blurred image of an input image based on the input image including a face of a person and generating an input reflectance image by separating each corresponding pixel value of the blurred image from each pixel value of the input image; and a face authenticating means for performing face authentication of the face of the person included in the input image by comparing the input reflectance image with a registered reflectance image of a previously registered person.

[0022] The inventor has found that, in order to enhance the authentication accuracy at face authentication, it is necessary to reflect not only the concept of removing the influence of illumination light from an input image, but also the concept of removing the influence of photographic environments from both the input image and the registered image, and thereby having reached the present invention. Here, the influences of photographic environments may be, for example, influences caused by the difference in illumination light at photographing, the difference caused by the kind or performance of a photographing device such as a camera, and the difference caused by a photographing condition such as white balance or exposure.

[0023] According to the face authentication technique of the present invention, since the reflectance image is used when face authentication is performed, the influence of photographic environments can be satisfactorily removed from the input image and the registered image. By doing so, the inherent facial features of the person can be compared, and thereby it is possible to perform the face authentication with a high degree of accuracy.

[0024] In addition, by using such a blurred image, without depending on image characteristics based on the influence of photographic environments or the differences in photographed persons, widely-used processes can be used.

[0025] In addition, combinations of the above components, or modifications of the expression of the present invention among methods, apparatuses, systems, storage media and computer programs, are also effective as the aspects of the present invention.

Advantageous Effects

[0026] According to the present invention, when face authentication is performed, the influence of photographic environments can be satisfactorily removed from an input image and a registered image, and the authentication process can be performed with a high degree of accuracy.

BRIEF DESCRIPTION OF THE DRAWINGS

[0027] FIG. **1** is a block diagram showing an example of a face authentication system according to an embodiment of the present invention.

[0028] FIG. **2** is a concept view for illustrating a processing order of the face authentication system according to the embodiment of the present invention.

[0029] FIG. **3** is a block diagram showing another example of the face authentication system according to the embodiment of the present invention.

[0030] FIG. **4** is a schematic view showing the process of a first distortion amount correcting unit according to the embodiment of the present invention.

[0031] FIG. **5** is a block diagram showing an example of the first distortion amount correcting unit according to the embodiment of the present invention.

[0032] FIG. **6** is a diagram showing an example of a displacement storing unit.

[0033] FIG. **7** is a flowchart for illustrating a processing order of the face authentication system according to the embodiment of the present invention.

[0034] FIG. **8** is a diagram showing an actually processed image processed by the face authentication system according to the embodiment of the present invention.

[0035] FIG. **9** is a diagram for illustrating an illuminating direction in an example and a comparative example.

[0036] FIG. **10** is a diagram showing a coefficient of a Sobel filter used in a comparative example.

DESCRIPTION OF PREFERRED EMBODIMENTS

[0037] Hereinafter, embodiments of the present invention will be described in detail with reference to accompanying drawings. In addition, in all drawings, the same component will be endowed with the same reference symbol, and duplicate descriptions will be suitably omitted.

First Embodiment

[0038] FIG. **1** is a block diagram showing the configuration of a face authentication system of this embodiment. The face authentication system **100** includes an image input unit **102**, a reflectance image generating unit **107**, a face authenticating unit **112**, and a registered reflectance image storing unit **122**. The reflectance image generating unit **107** includes a blurred image generating unit **108** and a separating unit **110**.

[0039] FIG. **2** is a concept view for illustrating a processing order of the face authentication system of this embodiment. Hereinafter, this embodiment will be described with reference to FIGS. **1** and **2**.

[0040] The image input unit **102** inputs an input face image **202** of a subject, which includes a face of a person. The reflectance image generating unit **107** generates an input reflectance image **206** based on the input face image **202**.

[0041] In detail, in this embodiment, the reflectance image generating unit **107** generates the input reflectance image **206** according to Equations (1) to (3) below.

[Equation 1]

$$R_i(x, y) = \log\frac{I_i(x, y)}{L_i(x, y)} \tag{1}$$

[0042] Here, I_i (x, y) is a pixel value of a coordinate (x, y) of an image to be processed (the input face image **202**), L_i (x, y) is a pixel value of a coordinate (x, y) of an image showing the influence of photographic environments, and R_i (x, y) is a pixel value of a coordinate (x, y) of a reflectance image (the input reflectance image **206**). Here, the pixel value may be considered as a feature representing the feature of each pixel, for example brightness, without being limited thereto.

[0043] The blurred image generating unit **108** generates a blurred input image **204** representing the influence of photo-

graphing environments, by blurring the input face image **202**. The blurred image generating unit **108** may generate the blurred input image **204** by, for example, smoothing the input face image **202**.

[0044] In this embodiment, the blurred image generating unit **108** may generate the blurred input image **204** by applying a Gaussian filter to the input face image **202**. This example will be shown in Equations (2) and (3). F (x, y) of Equation (2) is a Gaussian filter (Gauss function) as shown in Equation (3). ⌈*⌋ represents a convolution integral.

[Equation 2]

$$L_i(x, y) = F(x, y) * I_i(x, y) \tag{2}$$

[Equation 3]

$$F(x, y) = \frac{1}{2\pi\sigma^2}\exp\left(-\frac{x^2 + y^2}{2\sigma^2}\right) \tag{3}$$

[0045] In other words, here, the pixel value of each pixel of the input face image **202** is substituted with a weighted mean value where a large weight is added to a pixel value of a pixel close to the corresponding pixel and a small weight is added to a pixel value of a pixel far from the corresponding pixel. By doing so, blurring may be performed naturally. Here, a is a standard deviation.

[0046] In this embodiment, the Gaussian filter may be applied to the input face image **202** several times. In the case where the Gaussian filter is applied to the input face image **202** several times, for example, a Gaussian filter having a large filter size may be firstly applied, and then a Gaussian filter of a small size may be applied. In this configuration, it is possible to obtain a satisfactory blurred input image **204** totally blurred while remaining local features of the input face image **202**.

[0047] The separating unit **110** generates the input reflectance image **206** by dividing the pixel value of each pixel of the input face image **202** by the pixel value of each pixel corresponding to the blurred input image **204**, based on Equation (1), and then calculating its log. By doing so, the input reflectance image **206** where each pixel value corresponding to the blurred input image **204** is separated from each pixel value of the input face image **202** is obtained. The input face image **202**, the blurred input image **204**, the input reflectance image **206**, and the registered reflectance image **222** of FIG. **2** are conceptual views and do not represent actually processed images.

[0048] FIG. **8** is a diagram showing an actually processed image. FIG. **8***b* shows a blurred input image **204** generated by actually applying a Gaussian filter to the input face image **202** shown in FIG. **8***a*. FIG. **8***c* shows an input reflectance image **206** generated by separating the pixel value of the blurred input image **204** of FIG. **8***b* from the pixel value of the input face image **202** of FIG. **8***a*. In the input face image **202** of FIG. **8***a*, it could be understood that the right half of a face of a person is brighter than the left half due to the influence of illumination light. Meanwhile, in the input reflectance image **206** of FIG. **8***c*, this influence of illumination light is almost removed.

[0049] The registered reflectance image storing unit **122** stores a previously registered face image of a person as a comparable reference when the input reflectance image **206** performs face authentication. In this embodiment, the previously registered face image may be a reflectance image obtained by applying Equations (1) to (3) to an image captured by a photographic device such as a camera. The registered reflectance image storing unit **122** stores registered reflectance images **222** of a plurality of persons. Each registered reflectance image **222** may be set so that the face is oriented to the front and occupies a center region.

[0050] The face authenticating unit **112** performs face authentication by comparing the input reflectance image **206** generated by the reflectance image generating unit **107** with each registered reflectance image **222** (e.g., **222***a*) stored in the registered reflectance image storing unit **122** to calculate similarity. In this embodiment, the face authenticating unit **112** calculates a correlation coefficient of pixel values of the input reflectance image **206** and each registered reflectance image **222**. The face authenticating unit **112** determines that the person of the input reflectance image **206** is identical to the person of the registered reflectance image **222** if the correlation coefficient is equal to or larger than a predetermined set value. Here, the correlation coefficient may use, for example, Pearson's correlation (cosine correlation). The face authenticating unit **112** outputs the determination result.

[0051] In this embodiment, the blurred input image **204** is generated by smoothing small pixel differences of the input face image **202**. For this reason, the blurred input image **204** may approximately show the difference in photographic environments, such as differences caused by the kind or performance of a photographing device like a camera and differences caused by a photographic condition like white balance or exposure in addition to the difference in illumination light at photographing. By doing so, the input reflectance image **206** generated by correcting the input face image **202** into such a blurred input image **204** may exhibit inherent features of the face of a person with little relation to differences in photographic environments. In addition, the registered reflectance image **222** generated in the same way may also exhibit inherent features of the face of a person will little relation to differences in photographic environments.

[0052] As described above, according to the face authentication system **100** of this embodiment, since reflectance images are compared when face authentication is performed, the influence of photographic environments may be satisfactorily removed from the input image and the registered image. By doing so, inherent features of the face of the person may be compared, and therefore it is possible to perform face authentication with a high degree of accuracy.

[0053] In addition, in this embodiment, the input reflectance image **206** is obtained by using the blurred input image **204** in which each pixel of the input face image **202** is corrected by a weighted mean value, where the weighted value decreases with distance, based on pixel values of the corresponding pixel and surrounding pixels. As described above, when the blurred input image **204** is generated, pixel values of the surrounding pixels are also used. For this reason, even a minute position distortion may be satisfactorily corrected, and thereby, even though there are position distortions to some extent, the face authentication may be performed with a high degree of accuracy.

[0054] In addition, compared with the case where a face image is authenticated by extracting only feature points such as eye and lip and determining similarity based only on the feature points, if a pixel value of a portion where the slope of a pixel value difference of adjacent pixels is small is also used to perform authentication based on a correlation coefficient of

a pixel value, the authentication may be easily influenced by the shade of the image. However, in this embodiment, by using the reflectance image, the shadow of the image may be reduced without depending on the image characteristics. For this reason, the pixel value of the portion where the slope of a pixel value difference of adjacent pixels is small may also be used as feature amount, and thereby it is possible to perform authentication with a high degree of accuracy.

[0055] In addition, for example, in the case where a conventional edge filter where an image is corrected based on a pixel value difference of adjacent pixels is used, a portion where the pixel value difference is large may be corrected, but a portion where the pixel value difference is small may not be corrected. For this reason, for example, since a portion having a small difference in shade between pixels, such as a skin portion, may not be suitably corrected, it is difficult to determine similarity of the portion with good accuracy. In addition, since the process is performed locally, if there is a position distortion, an error may increase. According to the face authentication system **100** of this embodiment, by applying a Gaussian filter to the entire input face image **202**, the blurred input image **204** may be generated by means of uniform processing regardless of a pixel value of each pixel of the input face image **202**. In addition, the input face image **202** is corrected by the blurred input image **204**. For this reason, uniform processing may be applied to the entire image, and thereby it is possible to reduce the influence of photographic environments regardless of image characteristics.

[0056] In addition, according to the face authentication system **100** of this embodiment, calculation amount may be reduced compared with the case where a Gabor filter disclosed in Patent Literature 1 is used.

Second Embodiment

[0057] The input image input by the image input unit **102** may not be considered as having a face in a front-oriented state in a predetermined range, and thereby a position distortion may occur in the face. In the face authenticating unit **112**, when the input image is compared with the registered image, in the case where authentication is performed based on the correlation coefficient of the pixel value, the accuracy of a calculation value of the correlation coefficient may be deteriorated due to the face position distortion. Therefore, in this embodiment, the face authentication system **100** corrects the position distortion of the input image.

[0058] FIG. **3** is a block diagram showing the face authentication system **100** of this embodiment. In this embodiment, the face authentication system **100** includes a face region detecting unit **104**, a first distortion amount correcting unit **106**, and a reference face image storing unit **120** in addition to the components of the first embodiment described with reference to FIG. **2**. In addition, the face authenticating unit **112** includes a second distortion amount correcting unit **114**, a determining unit **116**, and a displacement storing unit **124**.

[0059] In this embodiment, the input image **200** input by the image input unit **102** may not be fully recognized as having only the face and may not be fully recognized as having the face in a front oriented state.

[0060] (Face Region Detection)

[0061] The face region detecting unit **104** detects a face region of a predetermined rectangular shape from the input image **200** input by the image input unit **102** by means of, for example, a face detecting technique such as the face detection method of Viola-Jones. Hereinafter, the description will be made by calling the face region detected by the face region detecting unit **104** an input face region image **201**.

[0062] (First Distortion Amount Correction)

[0063] The reference face image storing unit **120** stores an average face image **220** where an average face that is an average of a plurality of persons' faces is front-oriented and occupies a main region.

[0064] FIG. **4** is a schematic view for illustrating a processing order of the first distortion amount correcting unit **106** of this embodiment. The first distortion amount correcting unit **106** compares the input face region image **201** with the average face image **220** and calculates a motion vector (Mvec) of the input face region image **201** with respect to the average face image **220**. The first distortion amount correcting unit **106** corrects a position distortion of the face image in the input face region image **201** based on the calculated motion vector (Mvec).

[0065] Here, the motion vector (Mvec) may employ a vector that is used for correcting camera-shaking of the image captured by a photographic device such as a camera. In this embodiment, the first distortion amount correcting unit **106** may calculate a motion vector for the average face image **220** of the input face region image **201** by using the technique disclosed in Patent Literature 6 (U.S. Pat. No. 7,847,823) or Patent Literature 7 (U.S. Pat. No. 7,773,819). Patent Literature 6 (U.S. Pat. No. 7,847,823) and Patent Literature 7 (U.S. Pat. No. 7,773,819) are incorporated herein by reference.

[0066] FIG. **5** is a block diagram showing an example of the first distortion amount correcting unit **106**. Here, the example where the motion vector (Mvec) is calculated according to the order disclosed in Patent Literature 7 will be described. The first distortion amount correcting unit **106** includes a multi-resolution image generating unit **130**, a motion vector calculating unit **132**, and a position distortion correcting unit **134** (in the figure, just written as a correcting unit).

[0067] The multi-resolution image generating unit **130** generates multi-resolution images up to a predetermined resolution level, for each of the input face region image **201** and the average face image **220**. In addition, the multi-resolution images of the average face image **220** may be configured to be stored in the reference face image storing unit **120** in advance.

[0068] The motion vector calculating unit **132** firstly calculates a motion vector by detecting a two-dimensional distortion between images, based on the lowest resolution image of the multi-resolution image of the input face region image **201** and the average face image **220**. Thereafter, the motion vector calculating unit **132** detects a two-dimensional distortion between images by using the motion vector calculated at the previous stage as an initial value, based on the image of the next lowest resolution, and corrects the motion vector. The motion vector calculating unit **132** repeats this process, and corrects the motion vector by means of an image with a higher resolution by using the motion vector obtained in a previous stage as an initial value so that a motion vector (Mvec) may be generated with a high degree of accuracy. In addition, the motion vector calculating unit **132** firstly performs a whole-range matching in regard to an image of a low resolution to detect a two-dimensional distortion between images, and performs block matching in regard to an image of a relatively high resolution to detect a distortion at each feature. In addition, in this embodiment, the motion vector (Mvec) may include displacement (horizontal and vertical distortions), rotating distortion (vertical or horizontal distortion or rotating

distortion around an optic axis), enlargement or reduction (forward and rearward distortion).

[0069] The position distortion correcting unit **134** corrects the input face region image **201** based on the motion vector (Mvec) calculated by the motion vector calculating unit **132**. By this process, even in the case where a position distortion occurs in the input face region image **201**, the correction may be made using the average face image **220**, and thereby the position distortion may be reduced. In addition, since position distortion is corrected based on the calculated motion vector, even in the case where a position distortion is relatively large or the face is oriented in a different direction, the correction may be performed satisfactorily. In this embodiment, the face region detecting unit **104** may detect a face region of a predetermined rectangular shape as the input face image **202** by means of a known face detection technique, from the input image **200** where a region corresponding to the input face region image **201** is corrected by the first distortion amount correcting unit **106**. Here, the input face image **202** may have the same size as the registered reflectance image **222**. The input face image **202** may have the same size as the input face region image **201** or may have a smaller size than the input face region image **201**.

[0070] In order to calculate the motion vector, calculating amount increases, but by using the techniques disclosed in Patent Literature 6 or Patent Literature 7, a motion vector can be calculated with a high degree of accuracy by a relatively simple process without overburdening the computer. In addition, in this embodiment, since the motion vector is calculated based on the position distortion of the input face region image **201** and the average face image **220** by using the average face image **220**, approximately correcting position distortion can be rapidly performed.

[0071] (Second Distortion Amount Correction)

[0072] Referring to FIG. **3** again, the second distortion amount correcting unit **114** performs minute corrections to the position distortion of the input reflectance image **206** generated by the reflectance image generating unit **107** with respect to each registered reflectance image **222** stored in the registered reflectance image storing unit **122**.

[0073] Hereinafter, the processing order of the second distortion amount correcting unit **114** will be described. First, the second distortion amount correcting unit **114** selects a registered reflectance image **222** to be compared, from the registered reflectance image storing unit **122**. Subsequently, the second distortion amount correcting unit **114** determines similarity between the input reflectance image **206** generated by the reflectance image generating unit **107** and the selected registered reflectance image **222**. Here, a distance function is used to determine the similarity. In detail, the second distortion amount correcting unit **114** overlaps the input reflectance image **206** generated by the reflectance image generating unit **107** and the selected registered reflectance image **222**, and calculates a distance difference between images by using a distance function. As the distance function, for example, an L1 distance (abs) may be used. The second distortion amount correcting unit **114** temporarily stores the calculated distance difference in the displacement storing unit **124**.

[0074] Thereafter, the second distortion amount correcting unit **114** moves (perturbs) the input reflectance image **206** in the unit of pixel in a vertical or horizontal direction, and in a state where the registered reflectance image **222** is fixed, calculates a distance difference between the input reflectance image **206** in a moved state and the registered reflectance image **222**. Here, the range of displacement of the input reflectance image **206** varies depending on the resolution of the input reflectance image **206**, but may be set to be ±5 pixels or less both in the vertical and horizontal directions. The second distortion amount correcting unit **114** temporarily stores the calculated distance difference of each state of displacement in the displacement storing unit **124**, so as to be associated with each displacement. If the calculation for each displacement state of a predetermined range is completed, the second distortion amount correcting unit **114** selects a displacement having the smallest distance difference as an optimal displacement of the input reflectance image **206** with respect to the registered reflectance image **222** and stores this displacement in the displacement storing unit **124**. The second distortion amount correcting unit **114** performs the same process to each of other registered reflectance images **222** stored in the registered reflectance image storing unit **122**.

[0075] In addition, the range of displacement of the input reflectance image **206** may vary depending on the size of the motion vector (Mvec) calculated by the motion vector calculating unit **132** of the first distortion amount correcting unit **106**, and the range of displacement may increase if the size of the motion vector (Mvec) is large. If the size of the motion vector (Mvec) is large, correction amount of the first distortion amount correcting unit **106** also increases, and thereby a larger change is made from the original input image **200**. For this reason, if the input reflectance image **206** is set to have a large displacement range in this case, instability caused by the change in size can be absorbed.

[0076] FIG. **6** is a diagram showing an example of the displacement storing unit **124**. Here, the displacement storing unit **124** stores displacement (vertical and horizontal displacement) for each registered reflectance image **222** when a distance difference between the registered reflectance image **222** and the input reflectance image **206** is decreased to the minimum. Here, (+1,+1) represents a state where the input reflectance image **206** is moved by +1 pixel in both horizontal and vertical directions, and (−2,−1) represents a state where the input reflectance image **206** is moved by −2 pixel in the horizontal direction and by −1 pixel in the vertical direction. + in the horizontal direction represents movement in the right direction, and + in the vertical direction represents movement in the upper direction.

[0077] (Calculation of Correlation Coefficient)

[0078] Referring to FIG. **3** again, the determining unit **116** calculates a correlation coefficient of the input reflectance image **206** and each registered reflectance image **222**. At this time, the determining unit **116** refers to the displacement storing unit **124**, and calculates a correlation coefficient between the input reflectance image **206** and the registered reflectance image **222** in a state where the input reflectance image **206** is moved, based on the displacement of the input reflectance image **206** when the distance difference is smallest, with respect to the registered reflectance image **222**. The determining unit **116** determines that the input reflectance image **206** is identical to the registered reflectance image **222** if the correlation coefficient is equal to or larger than a predetermined set value. In addition, though not shown in the figures, the displacement storing unit **124** may store distance difference as well as displacement, and the determining unit **116** may calculate correlation coefficients in order from a registered reflectance image **222** having a smallest distance difference, with reference to the displacement storing unit **124**.

[0079] For example, the determining unit **116** may calculate correlation coefficients between the input reflectance image **206** and the entire registered reflectance images **222**. In addition, the determining unit **116** may perform block division to the input reflectance image **206** and the registered reflectance image **222** so as to correspond to each other and calculate a correlation coefficient for each block.

[0080] Hereinafter, the example where a correlation coefficient is calculated for each block will be described. The determining unit **116** performs block division to the input reflectance image **206** and the registered reflectance image **222** in each corresponding region. The determining unit **116** calculates a correlation coefficient between blocks at each block. Subsequently, the determining unit **116** multiples the correlation coefficient of each block by a weighted coefficient which becomes higher as the block has a higher correlation coefficient, and calculates a value (weighted mean value) obtained by dividing the sum of products of weighted coefficients of the entire blocks and the correlation coefficient by the sum of all weighted coefficients. In addition, at the block division, in order to enhance recognition accuracy, the blocks may be overlapped with each other.

[0081] By doing so, a correlation coefficient of a block having a low correlation coefficient is multiplied by a low weighted coefficient. For this reason, for example, influences of different blocks caused by the presence of glasses or different hairstyles of the same person may be reduced, and the correlation coefficient may be calculated based on the similarity of blocks which do not vary due to the difference in situations.

[0082] In addition, as another example, in the case where a correlation coefficient is calculated for every block, the weighted coefficient endowed to the correlation coefficient may be obtained by learning, or a higher weighted coefficient may be endowed in the order of criticalities of facial parts.

[0083] In addition, the determining unit **116** may calculate a correlation coefficient between the input reflectance image **206** and each registered reflectance image **222**, by employing various methods used for determining similarity in face authentication. For example, the determining unit **116** may calculate a correlation coefficient by giving a weight to a specific feature portion of the face in the input reflectance image **206** and the registered reflectance image **222**.

[0084] FIG. **7** is a flowchart for illustrating a processing order of the face authentication system **100** of this embodiment. First, the image input unit **102** inputs an input image **200** (S**100**). Subsequently, the face region detecting unit **104** detects a face region from the input image **200** as an input face region image **201** (S**102**). Subsequently, the motion vector calculating unit **132** of the first distortion amount correcting unit **106** calculates a motion vector (Mvec) for the average face image **220** of the input face region image **201** (S**104**). Thereafter, the position distortion correcting unit **134** corrects a region corresponding to the input face region image **201** of the input image **200** based on the motion vector (Mvec) (S**106**). Thereafter, the face region detecting unit **104** extracts the face region from the input image **200** where the region corresponding to the input face region image **201** is corrected, as the input face image **202** (S**107**).

[0085] Subsequently, the blurred image generating unit **108** of the reflectance image generating unit **107** generates a blurred input image **204** based on the input face image **202** (S**108**). Subsequently, the separating unit **110** generates an input reflectance image **206** based on the Retinex theory by using the input face image **202** and the blurred input image **204** (S**110**).

[0086] Thereafter, the second distortion amount correcting unit **114** of the face authenticating unit **112** respectively calculates a displacement where a distance between the input reflectance image **206** and each registered reflectance image **222** is the smallest (S**112**). Subsequently, the determining unit **116** calculates a correlation coefficient between the input reflectance image **206** and each registered reflectance image **222**, in consideration of the displacement where the distance difference is small, calculated in Step S**112** (S**114**). The determining unit **116** determines that the input reflectance image **206** is identical to the registered reflectance image **222** in the case where the correlation coefficient is equal to or larger than a predetermined set value (S**116**). Here, in the case where the correlation coefficient cannot be equal to and larger than the predetermined set value even though all registered reflectance images **222** are compared, the determining unit **116** outputs that the input image **200** cannot be authenticated.

[0087] According to the processing order of the face authentication system **100** of this embodiment, the first distortion amount correcting unit **106** calculates a motion vector of the input face region image **201** in respect to the average face image **220**, and corrects the position distortion based on the calculated motion vector. Since the motion vector of a single image is calculated by using the average face image **220**, for example, the calculation amount can be reduced in comparison to the case of being compared with each of a plurality of registered reflectance images **222** stored in the registered reflectance image storing unit **122**. Meanwhile, in the correction using the average face image **220**, a minute position distortion may remain. The face authentication system **100** of this embodiment corrects the position distortion by the first distortion amount correcting unit **106**, and then, in a state where the input reflectance image **206** is moved by the second distortion amount correcting unit **114** in respect to each registered reflectance image **222**, the position distortion is corrected again. By doing so, since the face authentication may be performed in a state where a minute position distortion is corrected based on individual variation when the average face image **220** is used, it is possible to perform face authentication with a high degree of accuracy while reducing the amount of calculation.

[0088] In the above embodiment, after the first distortion amount correcting unit **106** corrects position distortion of the input face region image **201** (after S**104** and S**106**), the reflectance image generating unit **107** generates the input reflectance image **206** by using the corrected input face image **202** (S**108** and S**110**). By performing the process in the above order, the input face image **202** can be extracted in a state where the face position distortion is corrected. For this reason, even though the size of the input face image **202** is small, the face portion may be extracted with good accuracy, and thereby the size of the input face image **202** may be reduced. By doing so, in the process of generating the input reflectance image **206**, the amount of processing may be small, which reduces the calculation cost. In this example, the input face image **202** may have a smaller size than the input face region image **201**.

[0089] Meanwhile, as another example, the process by the first distortion amount correcting unit **106** and the process by reflectance image generating unit **107** may change their orders. In other words, the reflectance image generating unit

107 may generate the input reflectance image by using the input face region image **201** as the input face image **202** before the input face region image **201** is corrected by the first distortion amount correcting unit **106**. In this case, the reference face image storing unit **120** may store the reflectance image of the average face image **220**. The first distortion amount correcting unit **106** may calculate a motion vector of the input reflectance image of the input face image **202** generated by the reflectance image generating unit **107**, with respect to the reflectance image of the average face image **220** stored in the reference face image storing unit **120**, and correct the position distortion of the input reflectance image of the input face region image **201** based on the corresponding motion vector. In this case, since the first distortion amount correcting unit **106** may correct the position distortion by comparing reflectance images free from the influence of photographic environments, the position distortion may be corrected without being influenced by the photographic environments.

EXAMPLES

[0090] A face image photographed under the condition where an illumination from a specific direction is not present is set as an original image (a), and in regard to the original image data (a), the illumination condition is processed so that an illumination light is cast with a predetermined intensity from a predetermined direction to prepare illumination condition-changed images (b to g). The illuminating direction of each illumination condition-changed image (b to g) is shown in Table 1.

Example

Reflectance Image

[0091] In regard to each of the original image (a) and the illumination condition-changed images (b to g), a reflectance image was obtained in the same order as described above. The reflectance images obtained based on the original image (a) and the illumination condition-changed images (b to g) are respectively called reflectance images (a' to g'). Here, after a Gaussian filter with a filter size of 15×15 filters was applied, a Gaussian filter with a filter size of 7×7 pixels was applied.

[0092] The similarity of each reflectance image (b' to g') and the reflectance image (a') was calculated to obtain a correlation coefficient. The result is shown in Table 1. FIG. **9** is a diagram for illustrating the illuminating direction. Here, in the case where the face is located at an original point of x coordinate, y coordinate, and z coordinate, the light source is located at a position having a distance r from said original point, an angle θ to the positive direction on the z axis (on the z axis at a position above the original point in the figure), a positive direction in the x axis (a position to the right of the original point in the figure), and an angle q in a direction (clockwise direction) from a positive position in the x direction to a negative position in the y direction, and light is cast toward the original point. In addition, the front-oriented direction of the face is set to be θ=45 degrees and ϕ=0 degree.

Comparative Example 1

Non-Treatment

[0093] A correlation coefficient was obtained by calculating similarity between each illumination condition-changed image (b to g) and the original image (a). The result is shown in Table 1.

Comparative Example 2

Edge (Sobel Filter)

[0094] The edge was processed using a Sobel filter in regard to the original image (a) and each illumination condition-changed image (b to g). The Sobel filter had a 3×3 size shown in FIG. **10**. The filter of FIG. **10***a* was applied in the x direction (horizontal direction) of each image, and the filter of FIG. **10***b* was applied in the y direction of each image.

[0095] The edge-processed images obtained based on the original image (a) and the illumination condition-changed images (b to g) are respectively set to be edge-processed images (a" to g"). Similarity between each edge-processed image (b" to g") and the edge-processed image (a") was calculated, and a correlation coefficient was obtained. The result is shown in Table 1.

[0096] (Result)

[0097] As shown in Table 1, in any condition, since similarity is determined by comparison between reflectance images, the correlation coefficient can be enhanced rather than the case where non-treated images are compared or edge-processed images are compared.

TABLE 1

Image data	Illuminating direction θ	Illuminating direction ϕ	Example Reflectance image	Comparative example 1 Non-treatment	Comparative example 2 Edge (Sobel filter)
b b' b"	45	5	0.82	0.75	0.75
c c' c"	45	10	0.82	0.72	0.73
d d' d"	60	25	0.45	0.36	0.40
e e' e"	45	15	0.70	0.64	0.57
f f' f"	30	15	0.54	0.48	0.37
g g' g"	45	350	0.73	0.72	0.55

[0098] Each component of the face authentication system **100** shown in FIGS. **1**, **3** and **5** is not a hardware unit configuration but a functional unit block. Each component of the face authentication system **100** is implemented by an arbitrary combination of hardware and software, based on a CPU of a computer, a memory, a program which implements each component loaded in the memory as shown in the figure, a storing unit such as a hard disk storing the program, and an interface for the connection to a network. In addition, its implementation method and apparatus has various modifications as apparent to those skilled in the art.

[0099] Heretofore, the embodiments of the present invention have been described with reference to the drawings, but they are just examples, and various configurations may also be adopted other than the above.

[0100] For example, in the above embodiment, the blurred image generating unit **108** applies a Gaussian filter to the input face image **202**. However, as another example, the

blurred image generating unit **108** may apply, for example, a pseudo Gaussian filter using a discrete Fourier transform to generate the blurred input image **204** of the input face image **202**. By this process, the blurred input image **204** may be generated rapidly.

[0101] In addition, as another example, the blurred image generating unit **108** may apply an average filter to the input face image **202** to generate the blurred input image **204** of the input face image **202**. In this case, the average filter may substitute the pixel value of each pixel of the input face image **202** with an average value of pixel values of the corresponding pixel and surrounding pixels. The average filter may be a box of a predetermined size. In addition, even when the average filter is used, the average filter may be applied to the input face image **202** several times. In the case where the average filter is applied to the input face image **202** several times, for example, it is possible to apply an average filter of a large filter size and then apply an average filter of a small size. By this configuration, it is possible to obtain the entirely blurred input image **204** with good accuracy while retaining local features of the input face image **202**.

[0102] In the above embodiment, the first distortion amount correcting unit **106** calculates a motion vector of the input face region image **201** with respect to the average face image **220** based on the average face image **220**. However, as another example, the first distortion amount correcting unit **106** may also calculate a motion vector of each registrant with respect to the face image by comparing face images of registrants registered in the registered reflectance image storing unit **122**. If the above process is performed, it is needed to calculate a motion vector of every face image of each registrant, which increases the throughput. Meanwhile, since the position distortion may be corrected with high accuracy by the process of the first distortion amount correcting unit **106**, for example, the process of Step S**112** of FIG. **7** may be excluded.

[0103] In addition, in the case where face region detecting unit **104** cannot detect the face region from the input image **200** or in the case where the first distortion amount correcting unit **106** cannot detect a feature when calculating the motion vector, the face authentication system **100** may intercept, for example, the face authentication of the face authenticating unit **112** as an error treatment. In addition, for example, the face authentication system **100** may perform face authentication between the input face image **202** and the average face image **220** by the face authenticating unit **112**, at the time when the input face image **202** is extracted by the face region detecting unit **104**, and even in the case where a correlation coefficient between them is very low, an error treatment may be performed. By doing so, for an image which cannot be authenticated, it is possible to prevent the image from being compared with a plurality of registered reflectance images **222** stored in the registered reflectance image storing unit **122**, thereby eliminating unnecessary processing time.

1. A face authentication system, comprising:

a reflectance image generating unit for generating a blurred image of an input image based on the input image including a face of a person and generating an input reflectance image by separating each corresponding pixel value of the blurred image from each pixel value of the input image; and

a face authenticating unit for performing face authentication of the face of the person included in the input image by comparing the input reflectance image with a registered reflectance image of a previously registered person.

2. The face authentication system according to claim **1**, wherein the face authenticating unit determines that the person included in the input image is identical to the person of the registered reflectance image when a correlation coefficient of the pixel values of the input reflectance image and the registered reflectance image is equal to or larger than a predetermined set value.

3. The face authentication system according to claim **1**, wherein the blurred image generating unit generates the blurred image by applying a Gaussian filter to the input image.

4. The face authentication system according to claim **1**, further comprising:

a motion vector calculating unit for calculating a motion vector of the input image or the input reflectance image with respect to a previously registered reference face image; and

a position distortion correcting unit for correcting a position distortion of the face of the person included in the input image or the input reflectance image based on the motion vector,

wherein the face authenticating unit performs face authentication based on the input reflectance image after a position distortion is corrected by the position distortion correcting unit.

5. The face authentication system according to claim **4**, wherein the reference face image is an image of an average face which is an average of a plurality of persons' faces.

6. The face authentication system according to claim **4**, wherein the face authenticating unit moves the input reflectance image, the position distortion of which is corrected by the position distortion correcting unit, with respect to the registered reflectance image in the unit of a pixel in a two-dimensional direction within a predetermined range, calculates similarity between the input reflectance image and the registered reflectance image in each state of position, and performs face authentication based on the input reflectance image and the registered reflectance image in a state of the highest similarity.

7. A face authentication method, comprising:

generating a blurred image of an input image based on the input image including a face of a person and generating an input reflectance image by separating each corresponding pixel value of the blurred image from each pixel value of the input image; and

performing face authentication of the face of the person included in the input image by comparing the input reflectance image with a registered reflectance image of a previously registered person.

8. A non-transitory computer readable medium containing a face authentication program, which allows a computer to function as conduct:

a reflectance image generating operation for generating a blurred image of an input image based on the input image including a face of a person and generating an input reflectance image by separating each corresponding pixel value of the blurred image from each pixel value of the input image; and

a face authenticating operation for performing face authentication of the face of the person included in the input

image by comparing the input reflectance image with a registered reflectance image of a previously registered person.

* * * * *