US 20250121215A1

2032

(19) **United States**

(12) **Patent Application Publication**
DAFT

(10) **Pub. No.: US 2025/0121215 A1**

(43) **Pub. Date: Apr. 17, 2025**

(54) **TFUS SYSTEM CONFIGURED WITH SIMPLIFIED PROBES**

(71) Applicant: **Sanmai Technologies, PBC**, Sunnyvale, CA (US)

(72) Inventor: **Christopher DAFT**, Tucson, AZ (US)

(21) Appl. No.: **18/909,120**

(22) Filed: **Oct. 8, 2024**

Related U.S. Application Data

(60) Provisional application No. 63/589,928, filed on Oct. 12, 2023.

Publication Classification

(51) **Int. Cl.**
A61N 7/00 (2006.01)

(52) **U.S. Cl.**
CPC *A61N 7/00* (2013.01); *A61N 2007/0026* (2013.01); *A61N 2007/0091* (2013.01)

(57) **ABSTRACT**

A transcranial Focused Ultrasound (tFUS) system employs a probe array for steering and focusing a neuromodulation beam, wherein the probe array comprises an array of piezoelectric elements and the size of each element is larger in elevation than in azimuth. A "fuel gauge" user interface is employed to assist in selecting optimal probe alignments. Guidance information is enhanced using optical data provided by a mobile device incorporating a camera or a LIDAR device. A simulated prediction of the ultrasound neuromodulation beam is overlayed on an image of the brain.

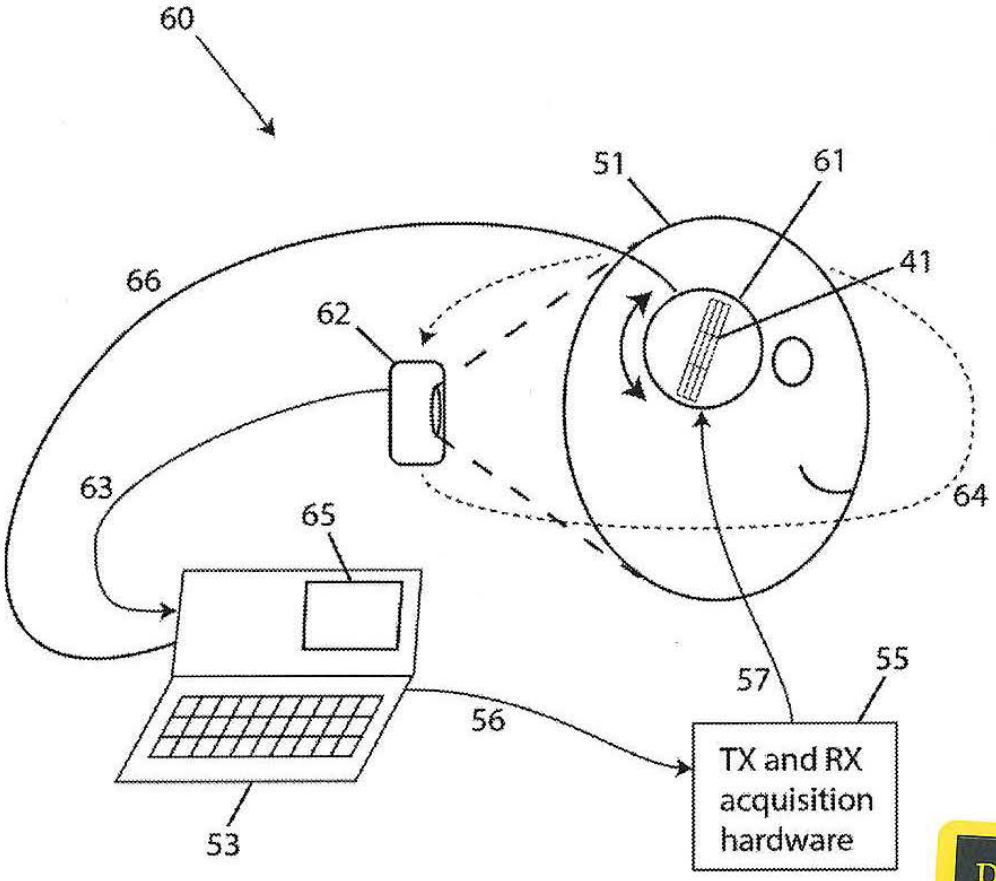

DAFT 2032
08/29/2025
Dr. Christopher Daft

FACETEC EXHIBIT 2081
JUMIO v. FACETEC
IPR2025-00107

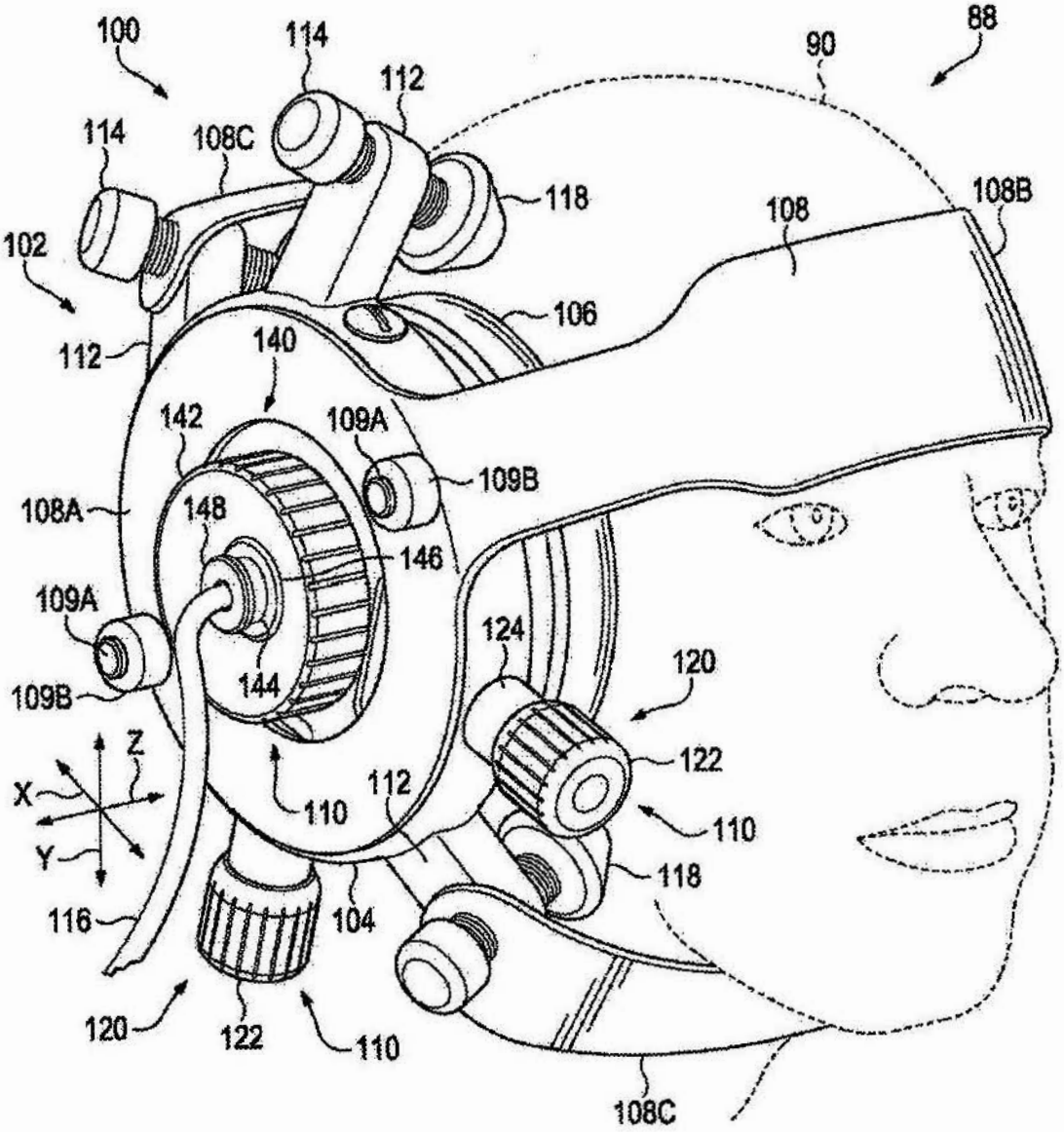

FIG. 1 (Prior Art)

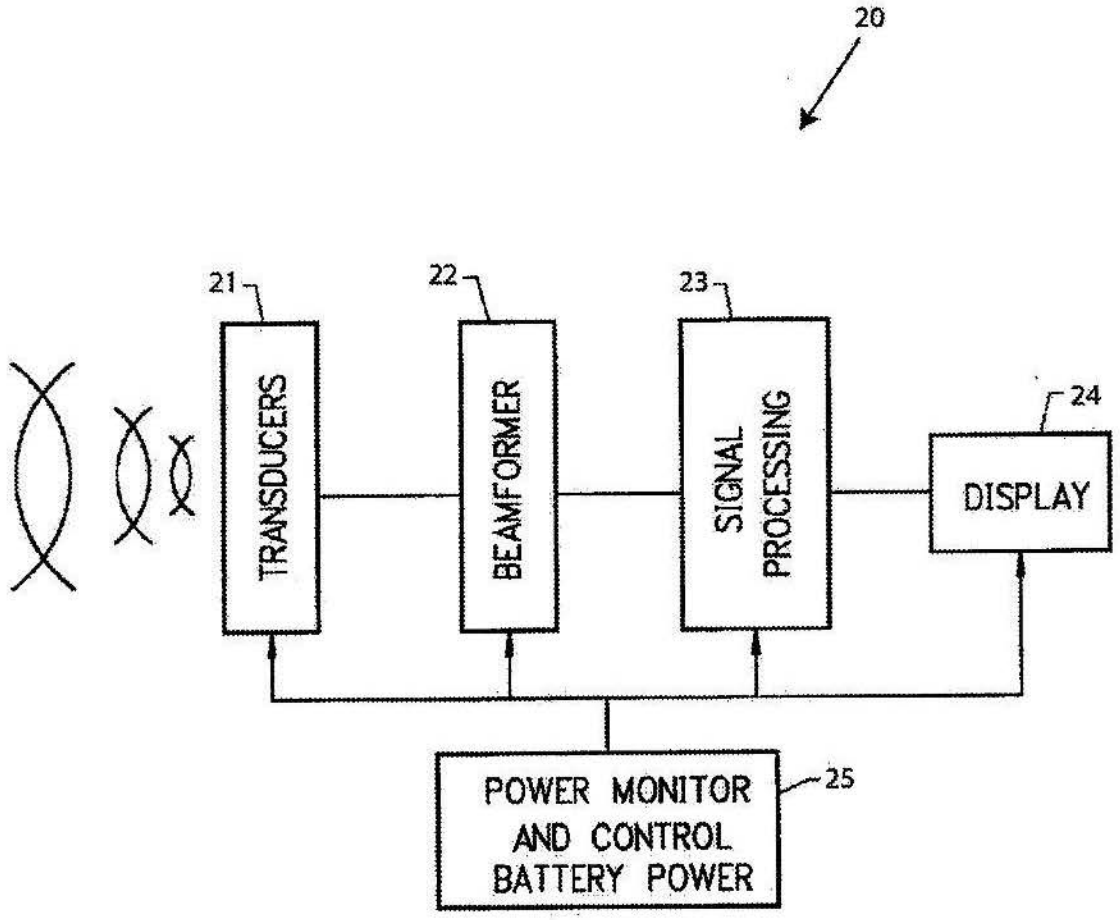

FIG. 2 (Prior Art)

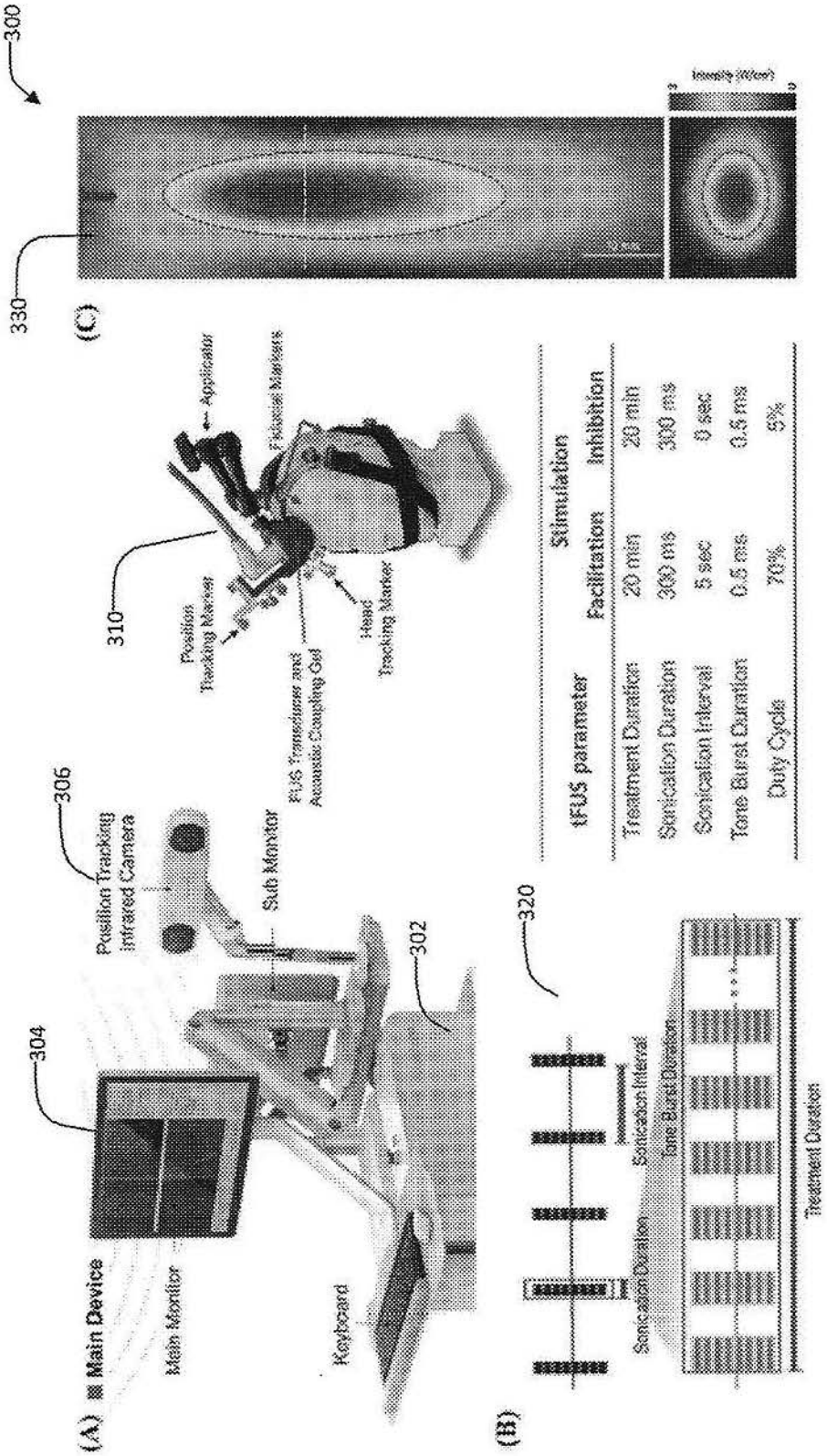

tFUS parameter	Stimulation	
	Facilitation	Inhibition
Treatment Duration	20 min	20 min
Sonication Duration	300 ms	300 ms
Sonication Interval	5 sec	0 sec
Tone Burst Duration	0.5 ms	0.5 ms
Duty Cycle	70%	5%

FIG. 3 (Prior Art)

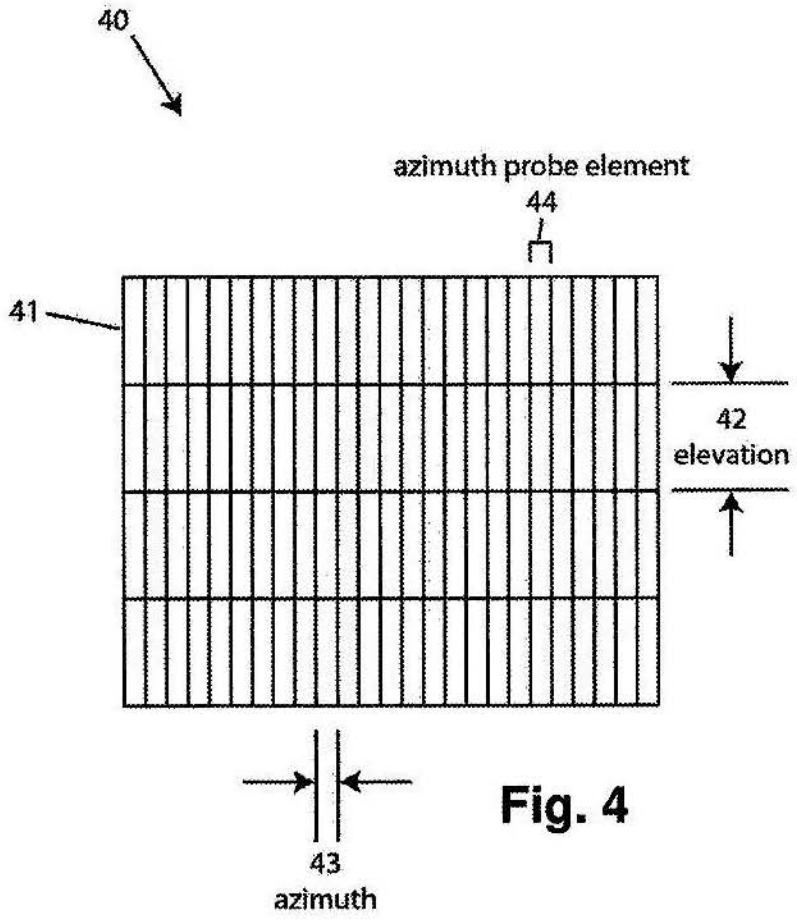

Fig. 4

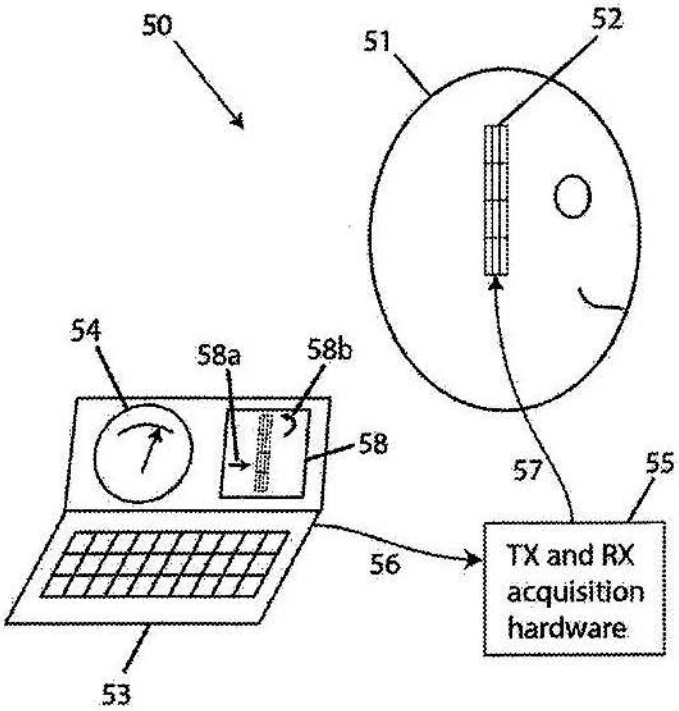
50
51
52
54
58a
58b
58
57
55
56
TX and RX acquisition hardware
53

Fig. 5

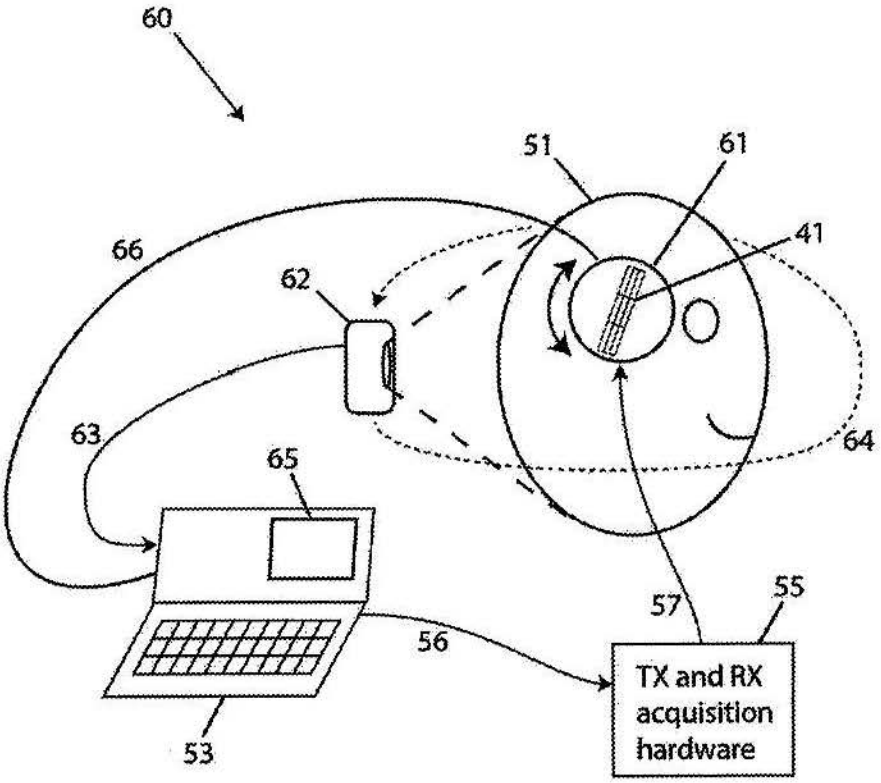
60
51
61
41
66
62
63
64
65
57
55
56
TX and RX acquisition hardware
53

Fig. 6

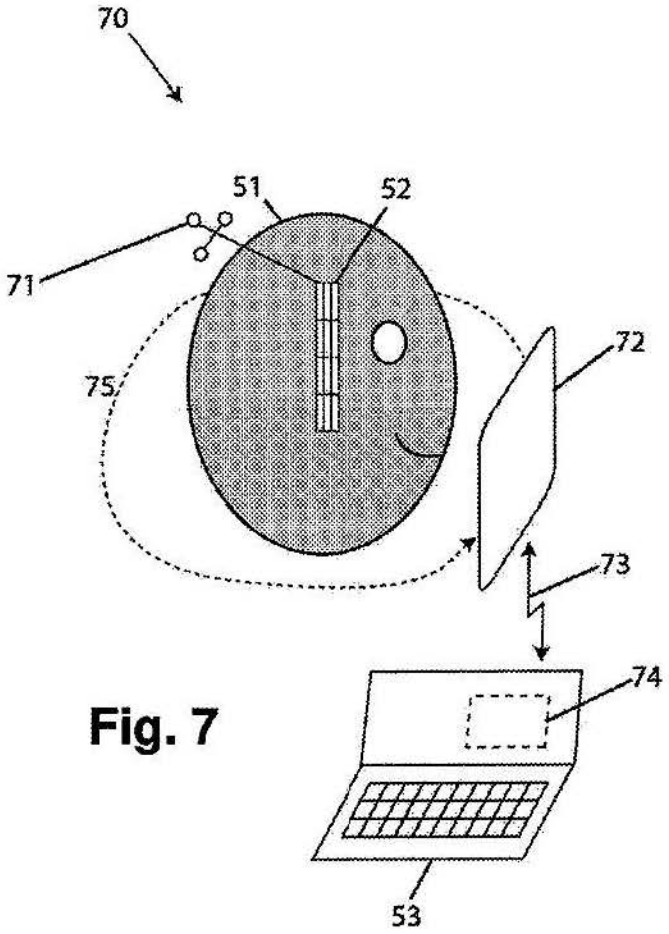

Fig. 7

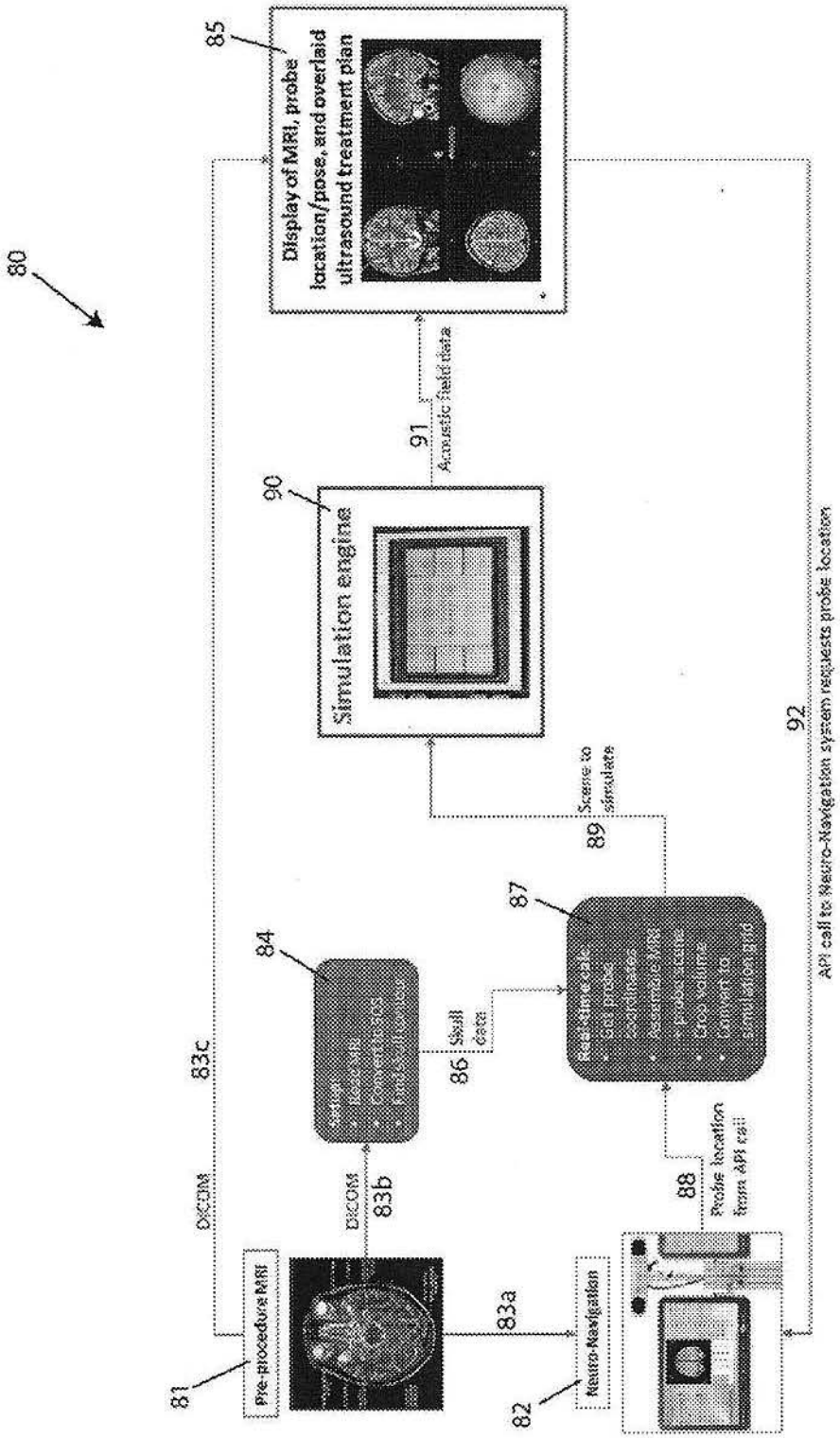
80
85
Display of MRI, probe location/pose, and overlaid ultrasound treatment plan
91
Acoustic field data
90
Simulation engine
89
Scene to simulate
92
API call to Neuro-Navigation system requests probe location
87
84
86
Skull data
83c
DICOM
83b
DICOM
88
Probe location from API call
81
Pre-procedure MRI
83a
82
Neuro-Navigation

Fig. 8

TFUS SYSTEM CONFIGURED WITH SIMPLIFIED PROBES

CROSS-REFERENCE TO RELATED APPLICATIONS

[0001] This application claims the priority benefit of U.S. Provisional Patent Application No. 63/589,928, filed Oct. 12, 2023 and entitled "TFUS SYSTEM CONFIGURED WITH SIMPLIFIED PROBES". The subject matter of this related application is hereby incorporated herein by reference.

BACKGROUND

[0002] U.S. Pat. No. 10,792,519, FOCUSED ULTRASOUND PROBE NAVIGATION SYSTEM, issued to Wurster et al, describes a focused ultrasonic probe navigation system in the prior art. A housing contains an ultrasonic device, and an alignment system moves the housing and the ultrasonic device within the housing, to align a focused point of ultrasonic energy aligned in three dimensions with a target location in a subject. In repeated therapy sessions alignment is re-established without requiring an MRI system. This system is further described in the Detailed Description.

[0003] U.S. Pat. No. 6,471,651, LOW POWER PORTABLE ULTRASONIC DIAGNOSTIC EQUIPMENT, issued to Hwang et al, describes a portable ultrasonic diagnostic equipment in the prior art. The system includes an array probe, a beamformer, signal processing and imaging circuitry, and a display for depicting echoed signals. This system is further described in the detailed description.

[0004] Young Goo Kim et al published a paper in the Journal of Clinical Medicine, "NEUROMODULATION USING TRANSCRANIAL FOCUSED ULTRASOUND ON THE BILATERAL MEDIAL PREFRONTAL CORTEX", June 2022. This system is further described in the Detailed Description.

BRIEF DESCRIPTION OF THE DRAWINGS

[0005] FIG. **1** illustrates a prior art tFUS system including a three-dimensional alignment system.

[0006] FIG. **2** illustrates a prior art tFUS system including a beamformer to focus transmitted and received echoes.

[0007] FIG. **3** illustrates a low-intensity tFUS system using neuronavigation presented in a paper by Young Goo Kim et al.

[0008] FIG. **4** illustrates a "1.75 D" array wherein slice patterns are larger in elevation than in azimuth, in an embodiment of the present disclosure.

[0009] FIG. **5** illustrates a tFUS system incorporating a "fuel gauge" for indicating when the best slice is selected for the acquisition plane, in embodiments of the present disclosure.

[0010] FIG. **6** illustrates a tFUS system wherein the 1.75 D probe array is rotatable for achieving an optimal orientation of the acquisition plane, in an embodiment of the present disclosure.

[0011] FIG. **7** illustrates a tFUS system wherein a mobile imaging device is deployed in cooperation with an optical registration feature, in an embodiment of the present disclosure.

[0012] FIG. **8** illustrates a block diagram of a tFUS system wherein a simulated ultrasound beam pattern is overlayed on brain anatomy produced by MRI, in an embodiment of the present disclosure.

DETAILED DESCRIPTION OF THE INVENTION

[0013] FIG. **1**, prior art, shows a perspective view of a focused ultrasonic Probe Navigation System (TNS) **100** described in U.S. Pat. No. 10,792,519. TNS **100** may be attached to a patient **88** and may apply ultrasonic energy to a target location within head **90** of patient **88**. However, TNS **100** may apply any type of sonic, magnetic, or any other alternative energy to any target location within any body part of patient **88**. TNS **100** may be used on human patients or animal patients. A housing assembly **102** comprises an outer housing **104** attached to a movable inner housing **106**. A probe may be located within inner housing **106**. A power cable **116** may attach to the probe and extend up through the inner housing **106** and outer housing **104**. A first vertical strap **108C** attaches to elevating screws **114** and wraps around the top of head **90** and underneath the chin of patient **88**. A second horizontal strap **108** includes a ring-shaped section **108A** that attaches to an outside surface of outer housing **104** via screws **109A** and nuts **109B** and a headband section **108B** that wraps around the front over the eyes and back of head **90**. While shown attached to head **90** straps **108** or other attachment devices, may attach housing assembly **102** to other body parts of patient **88**. The housing assembly **102** may be attached by straps **108** to the right side or left side of head **90** to apply ultrasonic energy to targets on either side of head **90**. Three housing arms **112** may extend radially out from sides of outer housing **104**. Elevating screws **114** may rotatably extend through housing arms **112** and may include elastomeric cushions **118** that press up against head **90**. Elevation screws **114** may be rotated downward pressing against head **90** to reduce some of the compressive force of inner housing **106** against head **90**. Alignment system **110** may move the probe within inner housing **106** into different x, y, and/or z positions with respect to head **90**. The x position may refer generally to front to back positions with respect to head **90**, the y position may refer generally to top to bottom positions of head **90**, and the z position may refer generally to a transverse inside to outside, or left to right positions, with respect to head **90**. If TNS **100** were attached on the top of head **90**, the x position may refer to front to back positions with respect to head **90**, the y position may refer to the left to right or side to side positions with respect to head **90**, and the z position may refer to the transverse inside or outward or top to bottom positions with respect to head **90**. Alignment system **110** may comprise adjustment assemblies **120** and a top adjustment assembly **140** that have the unique ability to move the probe within inner housing **106** in different x, y, and z directions while TNS **100** remains attached to head **90** of patient **88**. This allows more precise alignment of the probe with a target location within head **90**. Alignment system **110** may also provide quicker and more accurate reattachment of the TNS to head **90** to a same relative position with respect to the target location. This allows TNS **100** to be repeatedly attached during multiple ultrasonic therapy sessions without using an MRI device to relocate the target location. Side adjustment assemblies **120** each include a side adjustment knob **122** that rotatably attaches to a side extension **124** that extends radial out from

the side of outer housing **104**. Top adjustment assembly **140** includes a top adjustment knob **142** that is rotatably attached to outer housing **104**. A threaded ring **146** extends out through the middle of top adjustment knob **142**. A top end **144** of a probe lid extends out through threaded ring **146** and a cap **148** inserts into a center cavity of the top end **144** of the probe lid. Cap **148** operates as a wire guide for receiving cable **116** and operates as a stop for top end **144** of the probe lid.

[0014] FIG. **2**, prior art, is a functional block diagram of a portable ultrasonic diagnostic instrument described in U.S. Pat. No. 6,471,651. Ultrasound probes **21** generate ultrasonic waves and receive reflections of ultrasonic waves. Wave generation and echo signal processing are accomplished by a beamformer circuit **22** which interfaces with the probes **21**. Signals from beamformer **22** are passed to a signal processor **23** and the processed signals are used to control a display **24**. Electric power for the components of the instrument is provided by a battery source **25** which includes a power monitor and control. Heretofore, portable ultrasonic diagnostic instruments have been available but have operated at power levels exceeding 35 watts. System **20** limits power consumption to 25 watts for a digital beamformer instrument and 10 watts for an analog beamformer instrument.

[0015] FIG. **3**, prior art, illustrates a low intensity tFUS system **300** presented in a paper by Young Goo Kim et al, including a PC **302**, a monitor **304**, infra-red cameras **306**, and an FUS probe **310**. FIG. **300** also includes a schematic diagram **320** of sonication parameters (e.g., sonication duration, sonication interval, treatment duration, tone burst duration, duty cycle, etc.) in Group B. The PC **302** controls the operation of the FUS probe **310** to provide stimulation in accordance with the sonication parameters, creating the acoustic profile **330** in lateral and axial planes in Group C. "Stimulation" may more generally be described as "neuromodulation" since ultrasound has the capability to both increase and decrease neural activity, depending on parameters including intensity, burst length, and pulse repetition frequency.

[0016] Embodiments of the present disclosure will now be discussed. Methods are described for reliably delivering focused ultrasound to targeted brain anatomy using available ultrasound probes in the form of 1.75 D probe arrays that may be driven by off-the-shelf ultrasound electronic equipment via commercially available cables.

[0017] The term "1.75 D" is used in the literature to denote a probe with asymmetric element dimensions. This kind of probe can steer and focus normally in one dimension (which in this patent will be termed "azimuth") while its capabilities in the other dimension ("elevation") are reduced because of the small number of elements and their relatively large dimensions in terms of wavelengths. Such probes are the simplest designs that are capable of skull aberration correction and are thus of great importance in FUS systems. They produce slice data in the azimuth plane, and correct aberration in both azimuth and elevation.

[0018] While the inability of 1.75 D probes to acquire a volume scan (with high resolution in both azimuth and elevation) is a disadvantage, they are of interest in the development of cost-effective tFUS systems. For example, 1.75 D probes can be manufactured with mature processes using bulk piezoelectric materials by many vendors. Such processes and materials are highly optimized and inexpensive. The interconnect requirements of a 1.75 D probe can be met with off-the-shelf products from vendors such as TE CONNECTIVITY or PROTERIAL CABLE.

[0019] An objective of this application is to disclose ways in which 1.75 D probes can form useful parts of a tFUS system. Such systems benefit from low development costs and high component reliability deriving from the use of time-tested products and applications.

[0020] Several approaches are disclosed which compensate for the disadvantages of 1.75 D probes for neuromodulation and guidance. In brief, these approaches include:

[0021] Starting from an existing, academically developed "average" brain which is adapted to a specific patient's anatomy through the use of optical or acoustic measurements.

[0022] Training an AI using a volume-capable matrix probe is a second way to enable the use of 1.75 D probes in clinical practice. After the AI has "seen" many examples of cranial anatomy, it can produce a numerical value corresponding to the accuracy of orientation of a 1.75 D probe as a clinician moves it around on the scalp. A "fuel gauge" display is one useful means to guide the clinician to the correct orientation for a particular patient. This may be coupled with an augmented-reality display in which directions from the AI, such as arrows indicating translation and/or rotation, are superimposed on the live video.

[0023] Precise volume data can be acquired even with a 1.75 D probe by using the fact that brain tissue motion within the cranium is insignificant. A mechanical fixture mounted on the patient's head can be used to rotate the probe so that a conical volume is acquired.

[0024] These techniques produce partial data about the anatomy of the brain, which is needed to guide the ultrasonic neuromodulation. It is advantageous to estimate the anatomy of the complete brain by using the measured data for content-based image retrieval (CBIR) into an atlas of human anatomical scans (for example, structural MRI scans).

[0025] Guidance of the neuromodulation may be achieved using a volumetric 3D database of the head's anatomy. The 1.75 D probe produces only 2D slices of the head. The clinician can move the prove around to get several slices, but that is not as useful as volumetric 3D data such as may be produced by an MRI or a matrix ultrasound array. Since human brains are quite similar n aspects of their anatomies, a database of a few thousand MRIs, for example, can provide data that provides adequate resolution for neuromodulation targeting. Several different features can be collected using a 1.75 D probe that will enable a similarity lookup into a 3D database to find an MRI that closely matches the actual MRI of the subject. Possible features for performing a similarity lookup include:

- **[0026]** contours of the inner skull surface opposite the probe positions;
- **[0027]** blood vessel data from the 1.75 D probe, as it exhibits a Doppler shift while stationary cranial structures do not;
- **[0028]** anatomical features of the head such as ventricles, which are visible under ultrasound and can provide fiducial marks for the similarity lookup.

[0029] Once the features are extracted from the ultrasound data, a similarity metric is used to compare the features of the 2D ultrasound data with those in the 3D database. This involves calculating distances between feature vectors. Techniques like k-dimensional trees, locality-sensitive hash-

ing (LSH), and Facebook AI similarity search (FAISS) can be used to index into the MRI database. Once the closest-matching 3D volume has been found, it can be used to guide the neuromodulation.

[0030] The slice data produced by a 1.75 D probe may also be placed in the full brain context using an MRI scan of the subject and a NeuroNavigation system, such as the VISOR2 product manufactured by ANT NEURO.

[0031] While the 1.75 D array probe is capable only of acquiring a plane of data (typically with a trapezoidal geometry), many types of slice imaging are helpful to guide the neuromodulation beam. These may include gray-scale ultrasound (B-mode), tissue harmonic imaging (THI), Color Doppler and Power Doppler for identifying blood vessels, and strain imaging (acoustic radiation force imaging, ARFI), and shear wave elastography. By avoiding partial delivery of ultrasound energy due to poor guidance or complications due to skull anatomy, unwanted side effects are avoided, and target efficacy is improved.

[0032] In an embodiment of the present disclosure FIG. **4** illustrates a 1.75 D probe **40** comprising an array **41** of probe elements having elements comprising elevation **42** larger than elements comprising azimuth **43**. 1.75 D array **40** is used to steer and focus ultrasonic waves in a tFUS procedure, with variations to be described herein. The azimuth probe element **44** is shown as one column of array **41**. The 1.75 D arrangement economizes on the total number of probe elements by emphasizing the more useful azimuth elements over the less useful elevation elements. Efficacy of the accompanying tFUS procedure is achieved with this reduced number of elements, and the cable connecting the probe array **41** to a signal processor becomes implementable as a standard cable, available off-the-shelf. The size of the elements is insufficient to support steering and focusing, but the resolution is sufficient to perform aberration correction in elevation as well as in azimuth. This is because changes in the thickness of the skull are smooth and can be sampled by the larger elevation elements. The data created using probe array **41** may be called "slice data". To re-phrase the resolution issue, slice data is adequate to perform correct skull aberration, but not adequate to perform steering and focusing without additional functionality, such as a rotatable probe to be discussed in reference to FIG. **6**.

[0033] In an embodiment FIG. **5** illustrates a tFUS system **50** wherein a 1.75 D array **52** for acquiring slice data is driven by transmit and receive acquisition hardware **55** which receives input **56** from a computer **53** having a "fuel gauge" display **54**. During product development a large amount of volume data from many subjects is acquired using a matrix ultrasound probe. Subsequently, in the clinic, slice data is evaluated by artificial intelligence (AI), performed by an AI-capable processor in computer **53**, which has access to the volume data. Computer **53** executes instructions contained in memory and sends control signals **56** to transmit and receive acquisition hardware **55**, which controls **57** the probe array **52**. The multi-row probe provided in 1.75 D probe array **52** provides adequate resolution to correct skull aberrations, including adaptation to skull thickness. The fuel gauge **54** implements AI in computer **53** to find the optimal slice data for treatment; the gauge peaks when the best plane of acquisition is selected. AI is invoked to evaluate the position and orientation of probe array **52** based on its understanding of human brain anatomy; it indicates through the fuel gauge how suitable the current position and orientation are for guidance of the neuromodulation. The user moves the probe until the reading on the fuel gauge is maximized. User prompts such as arrows **58*a*** and rotation symbols **58*b*** may be provided in a second display **58** to help the operator find the maximum on the fuel gauge.

[0034] In an embodiment FIG. **6** illustrates a tFUS system **60** wherein a 1.75 D probe array **41** is used to perform volume guidance. Volume guidance refers to guidance of a neuromodulation beam within a transcranial volume to assist in targeting a treatment zone at a desired site within the volume. A mechanical arrangement **61** allows the rotation of probe **41**, which can be motorized or manual. An angular sensor incorporated into mechanical arrangement **61** provides information **66** on the orientation of the probe to computer **53**. Mechanical arrangement **61** is used to rotate the 1.75 D probe array **41**, while acquiring volume data by moving camera **62** around the subject's head **51** as shown **64**. Connection **63** sends video data from camera **62** to computer **53**. Computer **53** is connected **56** to transmit and receive acquisition hardware **55** which sends positional commands to mechanical arrangement **61** as shown **57**.

[0035] The geometry of the head of subject **51** is acquired optically using a camera **62**, informing the deformation of an average head obtained from an MRI database. As described in reference to FIG. **7**, LIDAR data can also be used to inform the deformation of an average head. An example of an average head database is the MONTREAL NEUROLOGIC INSTITUTE (MNI) average brain from McGill University. Ultrasound data acquired during the volume scan includes echoes from the inner surface of the far side of the skull from probe **41**. The anatomical shape of the skull may be used to further refine the deformed average brain so that it accurately matches the subject anatomy.

[0036] Accordingly, this tFUS system **60** can associate head geometry with the location and orientation of the neuromodulation probe, in this case slice data produced by probe array **41**. By integrating image data produced by camera **62**, content-based image retrieval in a database of MRI volume scans can be employed. Data from this database and optical data produced by camera **62** are displayed on display **65**.

[0037] In an embodiment FIG. **7** illustrates a tFUS system **70** having a different form of optically assisted guidance. Subject **51** has a 1.75 D probe array **52** attached as shown, with an optical feature **71** attached to it. A mobile device **72** incorporating a camera is shown. Mobile device **72** is moved around the head **51** of a subject as shown **75**; it includes position sensing capabilities such as provided by a Light Detection and Ranging (LIDAR) device. The optical feature **71** is attached to the probe **52**, allowing a Neuro Navigation system to report the position and orientation of the probe in the coordinate system of a pre-procedure MRI; this will be further discussed in reference to FIG. **8**. Mobile device **72** is linked wirelessly **73** to computer **53** having a display **74**. Using bi-directional wireless interface **73** computer **53** can command mobile device **72**, and mobile device **72** can report scan data to be displayed by computer **53** using display **74**. As previously described in reference to FIG. **6**, LIDAR data can also be used to deform the average head.

[0038] In an embodiment, FIG. **8** illustrates a tFUS system **80** which can be used to superimpose a simulation of the expected neuromodulation beam pattern on MRI volume data or on ultrasound data. In FIG. **8**, pre-procedure MRI data **81** flows in three directions, **83*a*** to a neuro-navigation

system **82**, **83***b* to a setup block **84**, and **83***c* to display **85**. Links **83***b* and **83***c* employ a DICOM interface, an international standard for communicating medical imaging information. Setup block **84** includes the steps of: reading the MRI data; converting to SOS (sinusoidal obstruction syndrome); and determining the skull contour of the subject. Skull data **86** is sent from setup block **84** to a real-time-calculation block **87**. As in FIG. **7**, the probe is attached to an optical feature recognizable by the Neuro Navigation system. Using a probe location provided **88** by the neuro-navigation system **82**, the real-time-calculation block **87** performs the following steps: retrieve probe coordinates; assemble MRI and probe scene; crop the image volume; and convert to a simulation grid. The calculated scene to be used in the simulation is sent **89** to a simulation engine **90** which produces acoustic field data as the simulated input of the expected beam pattern (neuromodulation), and sends it **91** to display **85**. Display **85** overlays a display of the MRI volume data, the probe location/pose, and an ultrasound treatment plan. Volume rendering is performed as required to produce the composite images. The computer controlling display **85** makes an API call **92** to the neuro-navigation system to request the probe location. In an alternative embodiment, instead of using a pre-procedure MRI scan, content-based image retrieval may be employed to obtain an approximation of the MRI volume data, as previously described.

[0039] System **80** enables a practitioner to see where the ultrasound will focus before starting the neuromodulation; using the mouse to click on the target brain structure ensures that the ultrasound will reach the target. If the simulated data shows that the path to the target is not clinically optimal, the clinician may alter the probe position and repeat the target specification process to access a different path to the target tissue.

What is claimed is:

1. A transcranial ultrasound system comprising:

a probe configured to focus a neuromodulation beam on a patient skull, wherein the probe comprises an array of rectangular elements, wherein a respective elevation of each element of the array is larger than a respective azimuth of each element of the array.

2. The transcranial ultrasound system of claim **1**, wherein the probe further comprises a rotatable mechanical structure.

3. The transcranial ultrasound system of claim **1**, further comprising:

acquisition hardware coupled to the probe, the acquisition hardware comprising a receiver that receives input from the probe; and

a computing device coupled to the acquisition hardware, the computing device generating a fuel gauge user interface based upon input from the probe, the fuel gauge user interface indicating suitability of a current position or a current orientation of the probe for providing neuromodulation to the patient skull using the probe.

4. The transcranial ultrasound system of claim **3**, further comprising:

At least one of a camera or a LIDAR device configured to obtain the current position or the current orientation of the probe relative to the patient skull.

5. The transcranial ultrasound system of claim **4**, wherein the at least one of a camera or a LIDAR device is integrated into a mobile device that is separate from the computing device.

6. The transcranial ultrasound system of claim **5**, wherein the mobile device is movable about the patient skull to obtain optical feedback associated with the current position or the current orientation.

7. The transcranial ultrasound system of claim **6**, wherein the optical feature indicates a position or an orientation of the probe relative to the patient skull.

8. The transcranial ultrasound system of claim **3**, wherein guidance information associated with placement of the probe is obtained by the acquisition hardware acoustically measuring an inner surface of the skull on an opposing side of the patient skull from where the probe is positioned.

9. The transcranial ultrasound system of claim **8**, wherein the guidance information is received from a pre-procedure MRI and a Neuro-Navigation system.

10. The transcranial ultrasound system of claim **8**, wherein the computing device determines the guidance information from an average brain MRI customized to the patient skull using at least one of camera data, LIDAR data, or acoustic data relating to an inner surface of the patient skull.

11. The transcranial ultrasound system of claim **1**, wherein the probe further comprises an optical feature comprising visual markings for identification by a camera or a LIDAR device.

12. The transcranial ultrasound system of claim **1**, where content-based image retrieval is employed to find a specific brain MRI in a database of brain MRIs, wherein the specific brain MRI is used to provide volume guidance for steering the neuromodulation beam.

13. The transcranial ultrasound system of claim **3**, wherein the computing device generates a simulated prediction of an ultrasound neuromodulation beam output by the probe that is overlaid on an image of a brain associated with the patient skull for steering the neuromodulation beam.

14. The transcranial ultrasound system of claim **13**, wherein the simulated prediction is derived using a simulator having inputs from a pre-procedure MRI and from a neuro navigation system.

15. The transcranial ultrasound system of claim **14**, wherein the pre-procedure MRI is replaced with an approximate 3D MRI obtained using a 1.75 D probe and a similarity lookup into a database of 3D MRI scans.

* * * * *