US009971920B2

(12) **United States Patent**
Derakhshani et al.

(10) **Patent No.: US 9,971,920 B2**
(45) **Date of Patent: *May 15, 2018**

(54) **SPOOF DETECTION FOR BIOMETRIC AUTHENTICATION**

(71) Applicant: **EyeVerify, LLC**, Kansas City, KS (US)

(72) Inventors: **Reza R. Derakhshani**, Shawnee, KS (US); **Casey Hughlett**, Lenexa, KS (US); **Jeremy Paben**, Prairie Village, KS (US); **Joel Teply**, Shawnee, KS (US); **Toby Rush**, Roeland Park, KS (US)

(73) Assignee: **EyeVerify LLC**, Kansas City, MO (US)

(*) Notice: Subject to any disclaimer, the term of this patent is extended or adjusted under 35 U.S.C. 154(b) by 0 days. days.

This patent is subject to a terminal disclaimer.

(21) Appl. No.: **14/790,863**

(22) Filed: **Jul. 2, 2015**

(65) **Prior Publication Data**

US 2016/0132735 A1 May 12, 2016

Related U.S. Application Data

(63) Continuation of application No. 14/335,345, filed on Jul. 18, 2014, now Pat. No. 9,104,921, which is a (Continued)

(51) **Int. Cl.**
G06K 9/00 (2006.01)

(52) **U.S. Cl.**
CPC ***G06K 9/00*** (2013.01); ***G06K 9/00597*** (2013.01); ***G06K 9/00899*** (2013.01); ***G06K 9/00906*** (2013.01)

(58) **Field of Classification Search**
CPC G06K 9/00597; G06K 9/00899
See application file for complete search history.

(56) **References Cited**

U.S. PATENT DOCUMENTS

5,291,560 A 3/1994 Daugman
5,303,709 A 4/1994 Dreher et al.
(Continued)

FOREIGN PATENT DOCUMENTS

CN 101119679 A 2/2008
CN 101404059 A 4/2009
(Continued)

OTHER PUBLICATIONS

Bowyer, K.W., et al., "Image Understanding for Iris Biometrics: A Survey," Computer Vision and Image Understanding; 110(2):281-307; May 2008.

(Continued)

Primary Examiner — Shefali Goradia
(74) *Attorney, Agent, or Firm* — Goodwin Procter LLP

(57) **ABSTRACT**

This specification describes technologies relating to biometric authentication based on images of the eye. In general, one aspect of the subject matter described in this specification can be embodied in methods that include obtaining images of a subject including a view of an eye. The methods may further include determining a behavioral metric based on detected movement of the eye as the eye appears in a plurality of the images, determining a spatial metric based on a distance from a sensor to a landmark that appears in a plurality of the images each having a different respective focus distance, and determining a reflectance metric based on detected changes in surface glare or specular reflection patterns on a surface of the eye. The methods may further include determining a score based on the behavioral, spatial, and reflectance metrics and rejecting or accepting the one or more images based on the score.

23 Claims, 10 Drawing Sheets

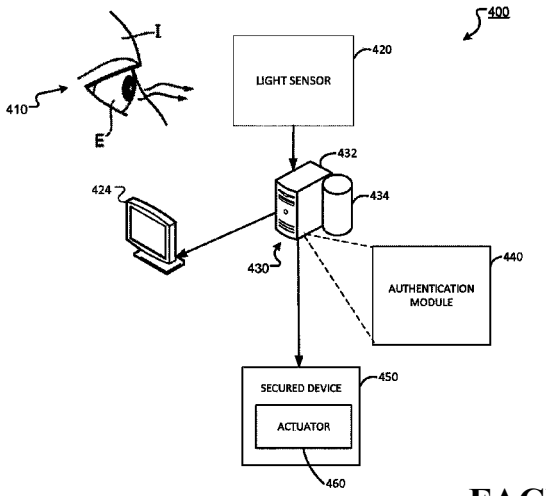

FACETEC EXHIBIT 2005
JUMIO v. FACETEC
IPR2025-00109

Related U.S. Application Data

continuation of application No. 14/216,964, filed on Mar. 17, 2014, now Pat. No. 8,787,628, which is a continuation of application No. 14/059,034, filed on Oct. 21, 2013, now Pat. No. 8,675,925, which is a continuation of application No. 13/888,059, filed on May 6, 2013, now abandoned, which is a continuation of application No. 13/572,097, filed on Aug. 10, 2012, now Pat. No. 8,437,513.

(56) **References Cited**

U.S. PATENT DOCUMENTS

5,632,282	A	5/1997	Hay et al.
6,095,989	A	8/2000	Hay et al.
6,542,624	B1	4/2003	Oda
6,760,467	B1	7/2004	Min et al.
6,839,151	B1	1/2005	Andree et al.
7,031,539	B2	4/2006	Tisse et al.
7,287,013	B2	10/2007	Schneider et al.
7,327,860	B2	2/2008	Derakhshani et al.
7,336,806	B2	2/2008	Schonberg et al.
7,668,351	B1	2/2010	Soliz et al.
7,801,335	B2	9/2010	Hanna et al.
7,925,058	B2	4/2011	Lee et al.
8,079,711	B2	12/2011	Stetson et al.
8,090,246	B2	1/2012	Jelinek
8,235,529	B1	8/2012	Raffle et al.
8,251,511	B2	8/2012	Stetson et al.
8,279,329	B2	10/2012	Shroff et al.
8,345,935	B2	1/2013	Angell et al.
8,345,945	B2	1/2013	Song et al.
8,369,595	B1	2/2013	Derakhshani et al.
8,437,513	B1	5/2013	Derakhshani et al.
8,457,367	B1	6/2013	Sipe et al.
8,553,948	B2	10/2013	Hanna
2005/0281440	A1	12/2005	Pemer
2005/0286801	A1	12/2005	Nikiforov
2006/0058682	A1	3/2006	Miller et al.
2006/0110011	A1	5/2006	Cohen et al.
2006/0132790	A1	6/2006	Gutiin
2006/0140460	A1	6/2006	Coutts
2007/0110285	A1	5/2007	Hanna et al.
2007/0286462	A1	12/2007	Usher et al.
2007/0291277	A1	12/2007	Everett et al.
2008/0025574	A1	1/2008	Morikawa et al.
2008/0298642	A1	12/2008	Meenen
2010/0094262	A1	4/2010	Tripathi et al.
2010/0128117	A1	5/2010	Dyer
2010/0142765	A1	6/2010	Hamza
2010/0158319	A1	6/2010	Jung et al.
2010/0271471	A1	10/2010	Kawasaki et al.
2011/0033091	A1	2/2011	Fujii et al.
2011/0058712	A1	3/2011	Sanchez Ramos
2012/0163678	A1	6/2012	Du et al.
2012/0300990	A1	11/2012	Hanna et al.
2016/0125178	A1*	5/2016	Danikhno G06F 21/32 726/18

FOREIGN PATENT DOCUMENTS

CN	101923640	A	12/2010
CN	102037488	A	4/2011
CN	102436591	A	5/2012
GB	2465881	A	6/2010
GB	2471192	A	12/2010
WO	WO-01/88857	A1	11/2001
WO	WO-2006/119425	A2	11/2006
WO	WO-2007/127157	A2	11/2007
WO	WO-2008/030127	A1	3/2008
WO	WO-2008/155447	A2	12/2008
WO	WO-2010/129074	A1	11/2010

OTHER PUBLICATIONS

Bowyer, K.W., et al., "A Survey of Iris Biometrics Research: 2008-2010," Handbook of Iris Recognition 2013; pp. 15-54; Jan. 2013.

Cesar Jr. and Costa, "Neurcal Cell Classification by Wavelets and Multiscale Curvature," Biol Cybern; 79:347-360; Oct. 1998.

Chen, Z., et al., "A Texture-Based Method for Classifying Cracked Concrete Surfaces From Digital Images Using Neural Networks," Proc.of Int'l Joint Conference on Neural Networks, IEEE, San Jose, CA; pp. 2632-2637; Jul. 31-Aug. 5, 2011.

Choras, R.S., "Ocular Biometrics-Automatic Feature Extraction From Eye Images," Recent Res. in Telecommunications, Informatics, Electronics and Signal Processing; pp. 179-183; May 2011.

Clausi, D.A. and Jernigan, M.E., "Designing Gabor Filters for Optimal Texture Separability," Pattern Recog; 33(11):1835-1849; Nov. 2000.

Costa, L.d.F. and Cesar Jr, R.M., "Shape Analysis and Classification: Theory and Practice," CRC Press; pp. 608-615; Dec. 2000.

Crihalmeanu, S., et al., "Enhancement and Registration Schemes for Matching Conjunctival Vasculature," Proc. of the 3rd IAPR/IEEE International Conference on Biometrics (ICB), Alghero, Italy; pp. 1247-1256; Jun. 2009.

Crihalmeanu, S. and Ross, A., "Multispectral Scleral Patterns for Ocular Biometric Recognition," Pattern Recognition Lett; 33(14):1860-1869; Oct. 2012.

Crihalmeanu, S. and Ross, A., "On the Use of Multispectral Conjunctival Vasculature as a Soft Biometric," Proc. IEEE Workshop on Applications of Computer Vision (WACV), Kona, HI; pp. 204-211; Jan. 2011.

Derakhshani, R.R., et al., "A New Biometric Modality Based on Conjunctival Vasculature," Proc. of the Artificial Neural Networks in Engineering Conference (ANNIE), St. Louis, MO; pp. 497-504, Nov. 2006.

Derakhshani, R.R., et al., "A Texture-Based Neural Network Classifier for Biometric Identification Using Ocular Surface Vasculature," Proceedings of International Joint Conference on Neural Networks (IJCNN), Orlando, FL; 6pgs.; Aug. 2007.

Derakhshani, et al., "A Vessel Tracing Algorithm for Human Conjunctival Vasculature," Abstract in Proc. of the Kansas City Life Sciences Institute Research Day Conference, Kansas City, MO; p. 150; Mar. 2006.

Derakhshani, et al., "Computational Methods for Objective Assessment of Conjunctival Vascularity," Engineering in Medicine and Biology Society (EMBC), Proc.of the 2012 IEEE Engineering in Medicine and Biology Conference, San Diego, CA; 4pgs; Aug. 28-Sep. 1, 2012.

Gottemukkula, V., et al., "A Texture-Based Method for Identification of Retinal Vasculature," 2011 IEEE International Conference on Technologies for Homeland Security, Waltham, MA; pp. 434-439; Nov. 15-17, 2011.

Grigorescu, S.E., et al., "Comparison of Texture Features Based on Gabor Filters," IEEE Transactions on Image Processing; 11(10):1160-1167; Oct. 2002.

He, X., et al.; Three-Class ROC Analysis—A Decision Theoretic Approach Under the Ideal Observer Framework; IEEE Transactions on Med Imaging; 25(5):571-581, May 2006.

http://appbank.us/healthcare/pulse-phone-put-your-finger-against-the-camer-a-to-check-your-pulse-check-your-pulse-every-day-and-keep-control-of-your-health, accessed Aug. 8, 2012.

Int'l Search Report and Written Opinion of the ISA/EP in PCT/US2013/042889; 11pgs.; dated Oct. 18, 2013.

Int'l Search Report and Written Opinion of the ISA/EP in PCT/US2013/043901; 11pgs.; dated Aug. 22, 2013.

Int'l Search Report and Written Opinion of the ISA/EP in PCT/US2013/043905; 9pgs.; dated Nov. 15, 2013.

(56) **References Cited**

OTHER PUBLICATIONS

Kalka, N.D., et al. "Estimating and Fusing Quality Factors for Iris Biometric Images," IEEE Transactions on Systems, Man and Cybernetics, Part A: Systems and Humans; 40(3):509-524; May 2010.
Kirbas, C. and Quek, F.K.H., "Vessel Extraction Techniques and Algorithms: A Survey," Proc. of the Third IEEE Symposium on Bioinformatics and Bioengineering, Computer Society, Bethesda, MD; 8pgs; Mar. 10-12, 2003.
Kollreider, K., et al., "Verifying Liveness by Multiple Experts in Face Biometrics," IEEE Comp Soc Conference on Computer Vision and Pattern Recognition Workshops, Anchorage, AK; pp. 1-6; Jun. 24-26, 2008.
Li, H. and Chutatape, O., "Automated Feature Extraction in Color Retinal Images by a Model Based Approach," IEEE Transactions on Biomed Eng; 51(2):246-254; Feb. 2004.
Liu, Z., et al., "Finger Vein Recognition With Manifold Learning," J Network and Computer Appl; 33(3):275-282; May 2010.
Liu, C., et al., "Gabor Feature Based Classification Using the Enhanced Fisher Linear Discriminant Model for Face Recognition," IEEE Transactions on Image Processing; 11(4):467-476; Apr. 2002.
Owen, C.G., et al., "Optimal Green (Red-free) Digital Imaging of Conjunctival Vasculature," Opthal Physiol Opt; 22(3):234-243; May 2002.
Proenca, H., "Quality Assessment of Degraded Iris Images Acquired in the Visible Wavelength," IEEE Transactions on Information Forensics and Security; 6(1):82-95; Mar. 2011.
Randen, T. and Husøy, J.H., "Filtering for Texture Classification: A Comparative Study," IEEE Transactions on Pattern Analysis and Machine Intell.; 21(4):291-310; Apr. 1999.
Saad, M.A., et al., "Model-Based Blind Image Quality Assessment Using Natural DCT Statistics," IEEE Transactions on Image Processing; X(X):1-12; Dec. 2010.
Schwartz, G. and Berry, M.J., "Sophisticated Temporal Pattern Recognition in Retinal Ganglion Cells," J Neurophysiol; 99(4):1787-1798; Feb. 2008.
Sun, Z., et al., "Improving Iris Recognition Accuracy via Cascaded Classifiers," IEEE Transactions on Systems, Man, and Cybernetics—Part C: Applications and Reviews; 35(3):435-441; Aug. 2005.
Tanaka, T. and Kubo, N., "Biometric Authentication by Hand Vein Patterns," Soc. of Instrument and Control Engineers (SICE) Annual Conference, Sapporo, Japan; pp. 249-253; Aug. 4-6, 2004.
Tanaka, H., et al.; Texture Segmentation Using Amplitude and Phase Information of Gabor Filters, Elec.Comm. in Japan, Part. 3; 87(4):66-79; Apr. 2004.
Tankasala, S.P., et al., "Biometric Recognition of Conjunctival Vasculature Using GLCM Features," 2011 Int'l Conference on Image Information Processing (ICIIP), Waknaghat, India; 6pgs; Nov. 3-5, 2011.
Tankasala, S.P. et al., "Classification of Conjunctival Vasculature Using GLCM Features," 2011 Int'l Conference on Image Information Processing (ICIIP), Waknaghat, India; 6pgs; Nov. 2011.
Tankasala, S.P., et al., "Visible Light, Bi-Modal Ocular Biometrics," Proc. of the 2012 2nd International Conference on Communication Computing and Security (ICCCS), Rourkela, India; 9pgs; Oct. 6-8, 2012.
Thomas, N.L., et al., "A New Approach for Sclera Vein Recognition," Proc. SPIE 7708, Mobile Multimedia/Image Processing, Security, and Applications 2010; 7708(1):1-10; Apr. 2010.
Toth, B., "Liveness Detection: Iris," Encyclo. Biometrics; 2:931-938; Jan. 2009.
Wu, C. and Harada, K., "Extraction and Digitization Method of Blood Vessel in Scleraconjunctiva Image," Int'l J Computer Sci and Network Security; 11(7):113-118; Jul. 2011.
Zhou, Z., et al., "A Comprehensive Sclera Image Quality Measure," 2010 11th Int'l. Conf. Control, Automation, Robotics and Vision (ICARCV), Singapore; pp. 638-643; Dec. 7-10, 2010.
Zhou, Z., et al., "A New Human Identification Method: Sclera Recognition," IEEE Transactions on Systems, Man, and Cybernetics Part A: Systems and Humans; 42(3):571-583; May 2012.
Zhou, Z., et al., "Multi-angle Sclera Recognition System," 2011 IEEE Workshop on Computational Intelligencein Biometrics and Identity Management (CIBIM), Paris; 6pgs; Apr. 11, 2011.
Zhou, Z., et al., "Multimodal Eye Recognition," Mobile Multimedia/Image Processing, Security, and Applications 2010; 7708:1-10; Apr. 2010.

* cited by examiner

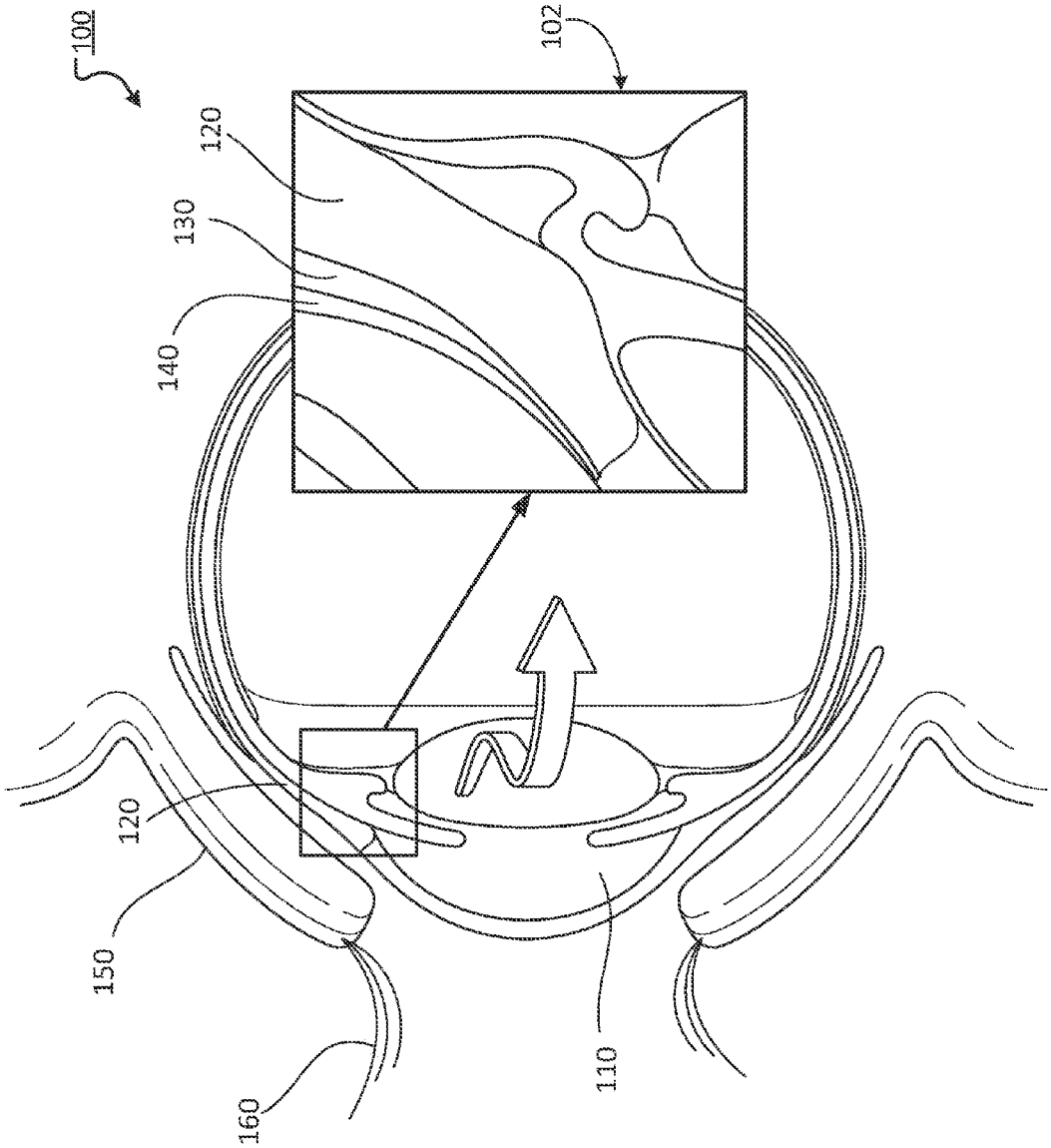

FIG. 1

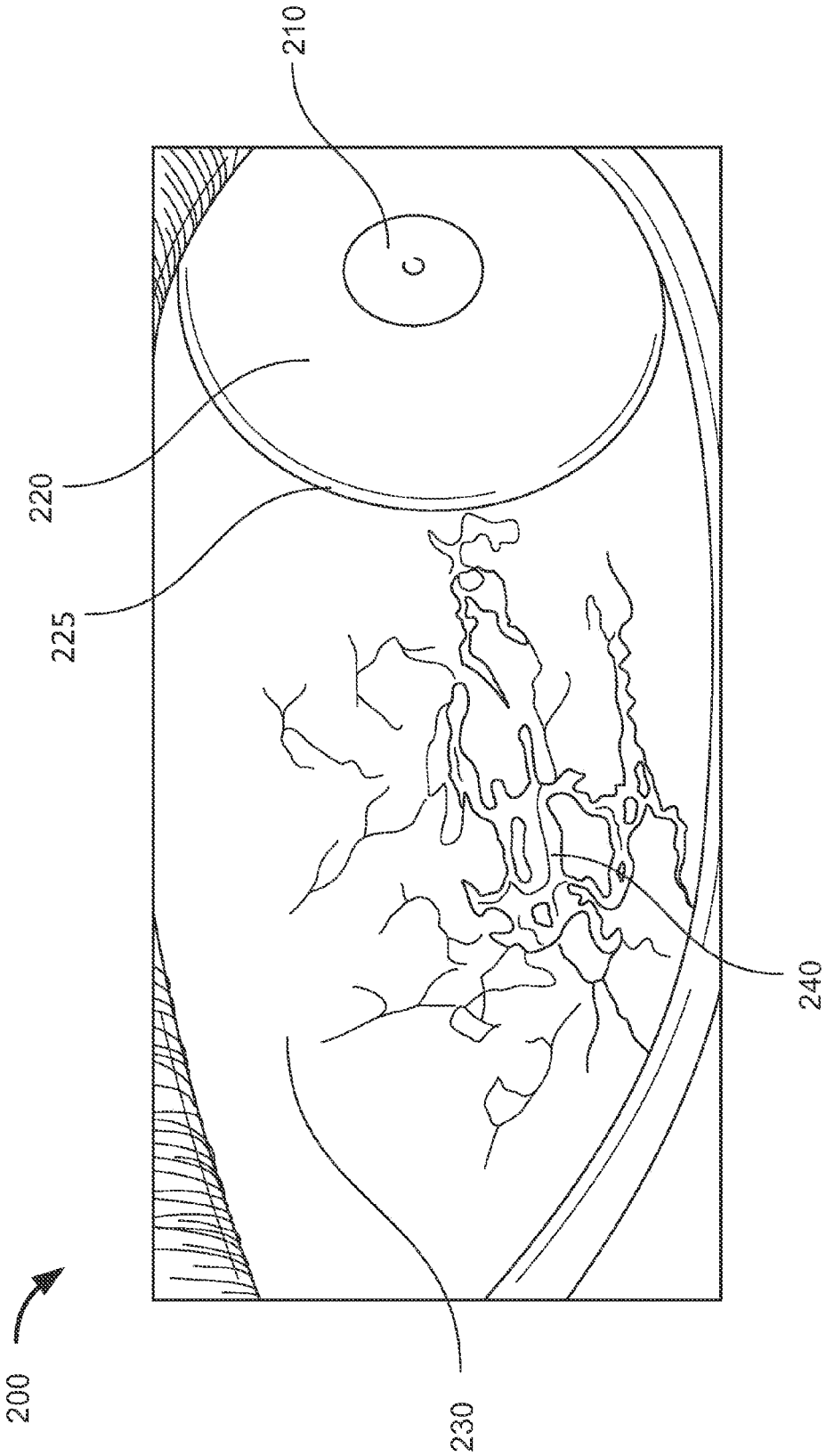

FIG. 2

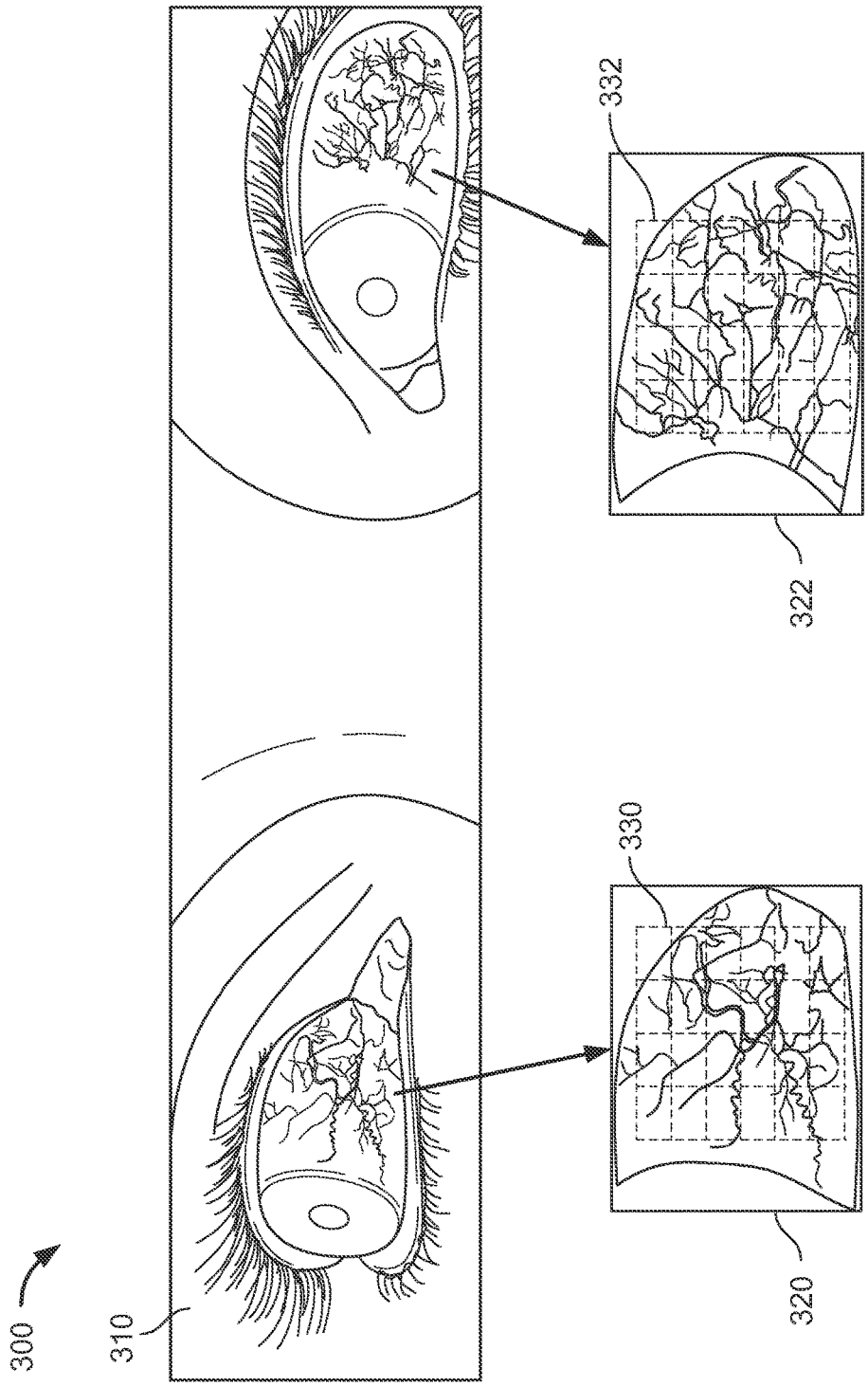

FIG. 3

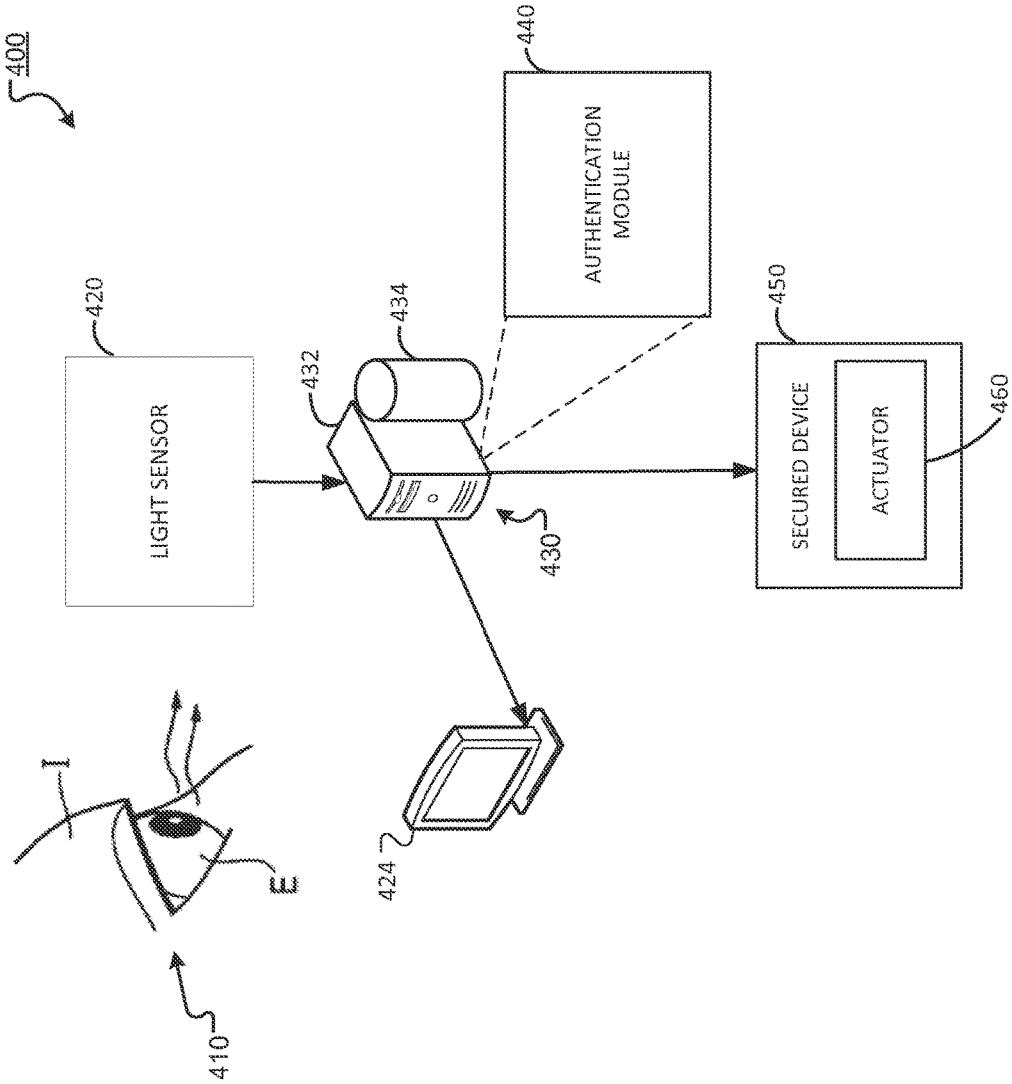
400
420
LIGHT SENSOR
432
434
440
AUTHENTICATION MODULE
450
SECURED DEVICE
ACTUATOR
460
430
424
I
E
410

FIG. 4

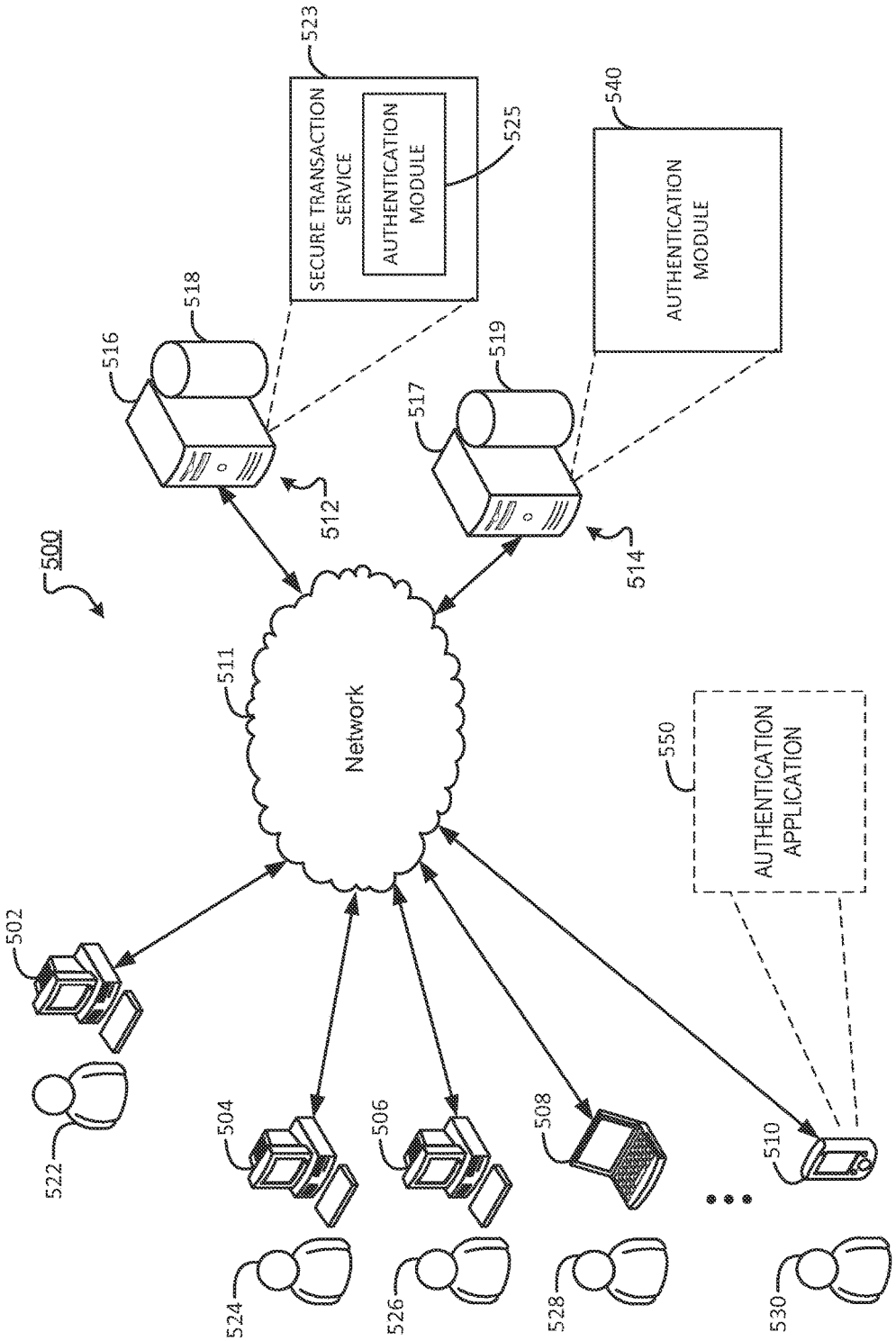
500
SECURE TRANSACTION SERVICE
AUTHENTICATION MODULE
523
525
AUTHENTICATION MODULE
540
516
518
517
519
512
514
Network
511
AUTHENTICATION APPLICATION
550
502
522
504
524
506
526
508
528
510
530

FIG. 5

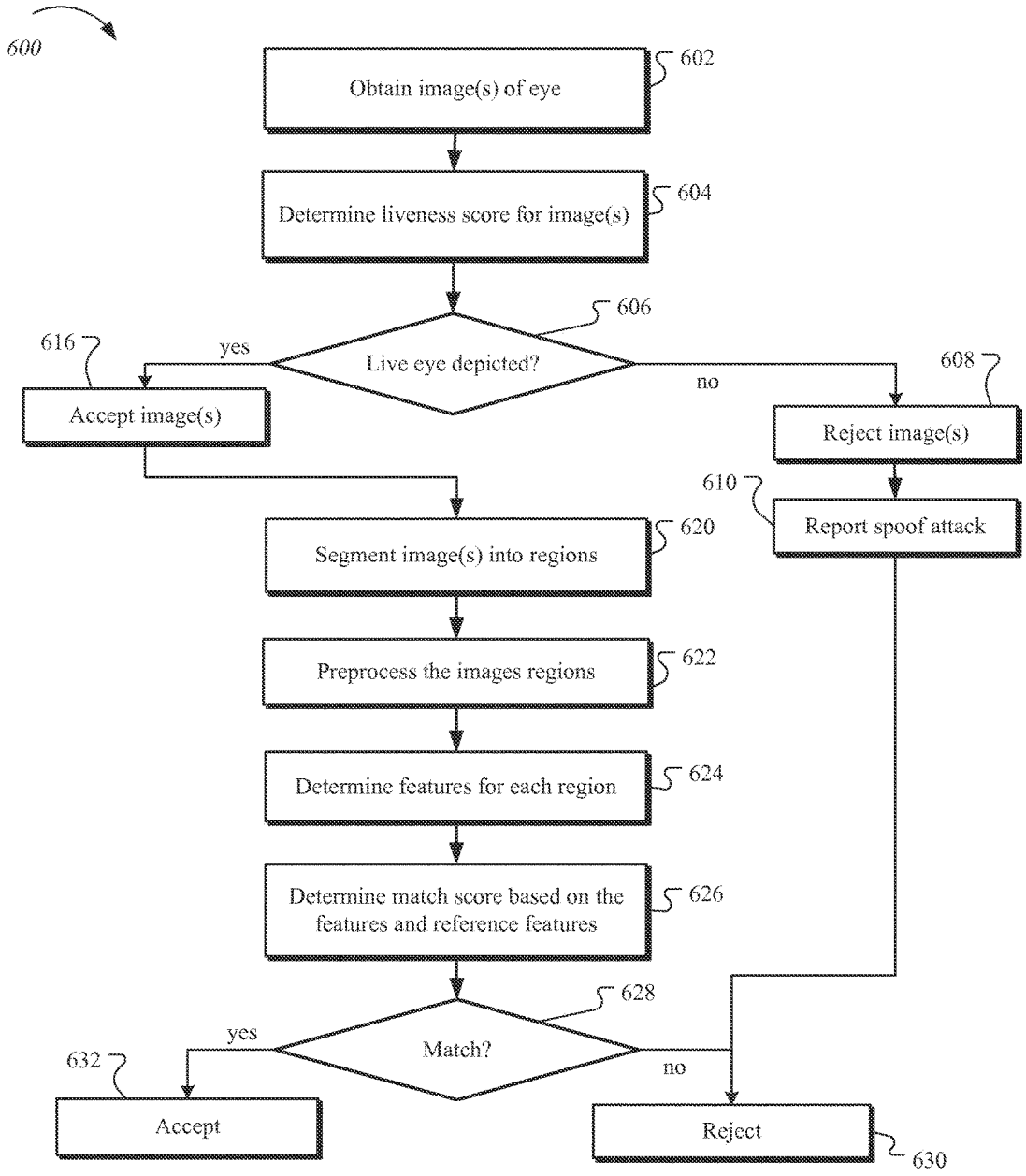
600
Obtain image(s) of eye
602
Determine liveness score for image(s)
604
Live eye depicted?
606
yes
no
616
Accept image(s)
608
Reject image(s)
610
Report spoof attack
Segment image(s) into regions
620
Preprocess the images regions
622
Determine features for each region
624
Determine match score based on the features and reference features
626
Match?
628
yes
no
632
Accept
Reject
630

Fig. 6

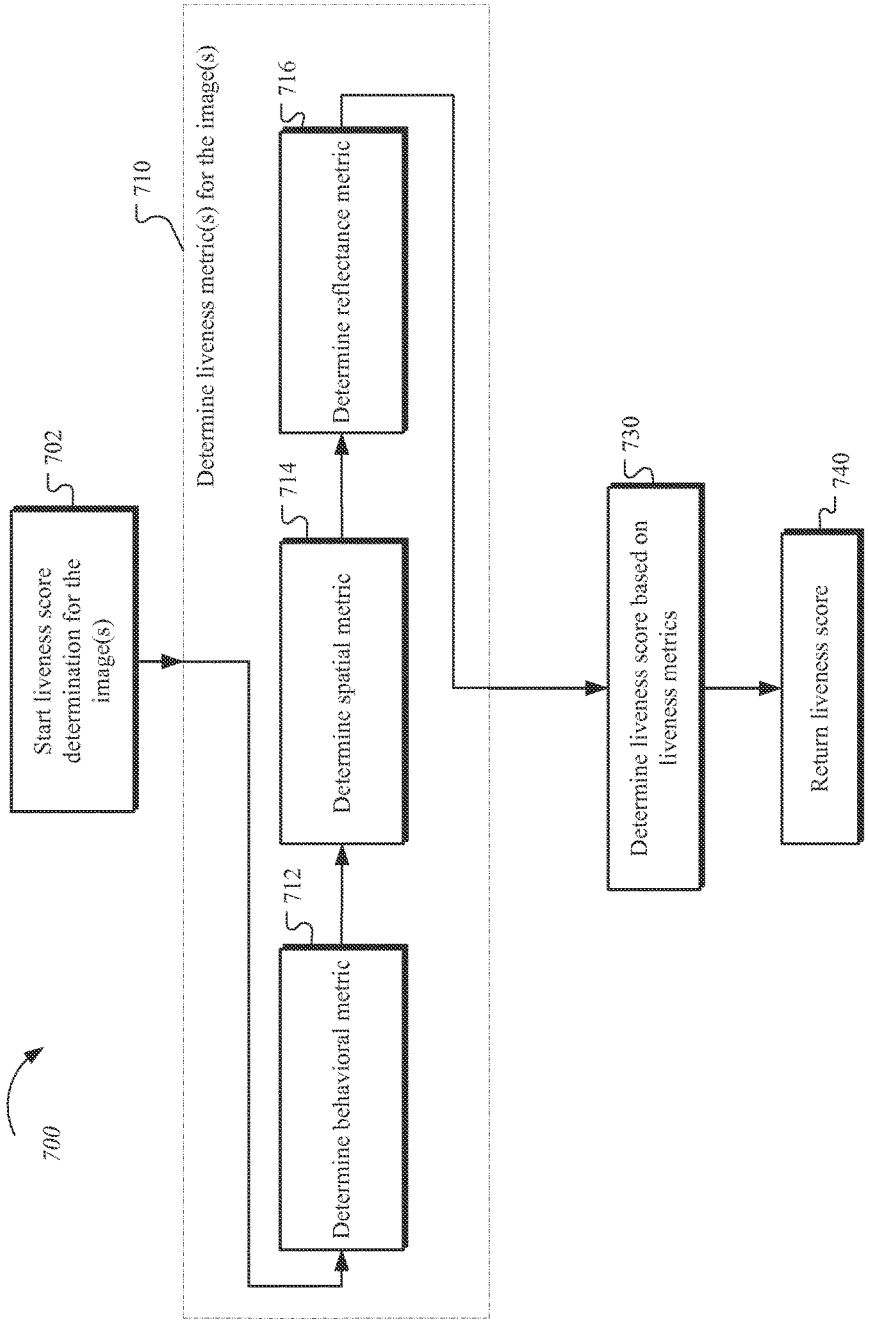
700
Start liveness score determination for the image(s)
702
Determine liveness metric(s) for the image(s)
710
Determine behavioral metric
712
Determine spatial metric
714
Determine reflectance metric
716
Determine liveness score based on liveness metrics
730
Return liveness score
740

Fig. 7

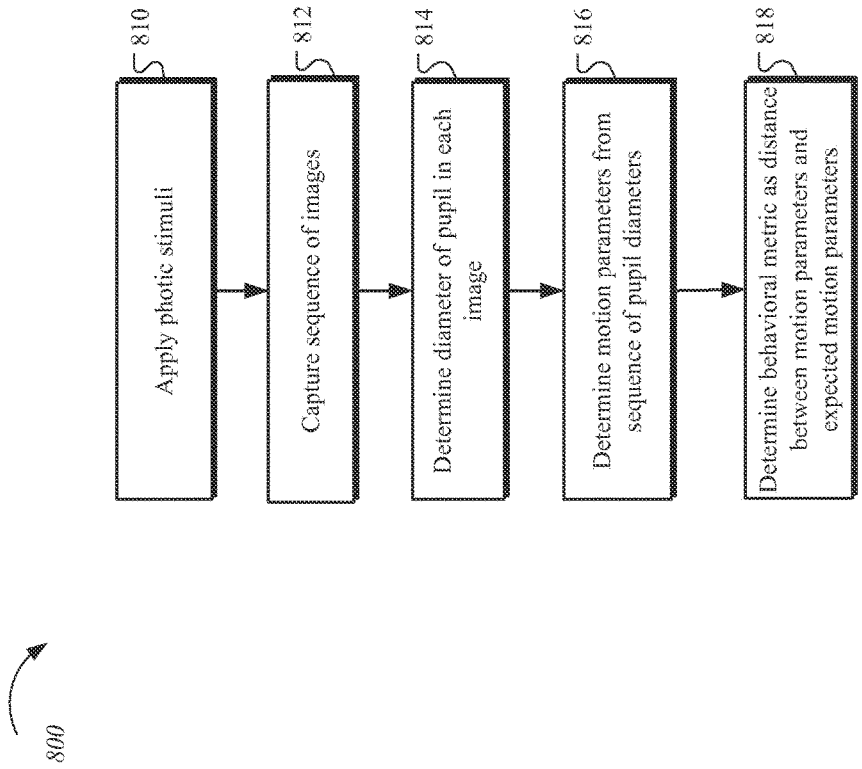
800
Apply photic stimuli
810
Capture sequence of images
812
Determine diameter of pupil in each image
814
Determine motion parameters from sequence of pupil diameters
816
Determine behavioral metric as distance between motion parameters and expected motion parameters
818

Fig. 8A

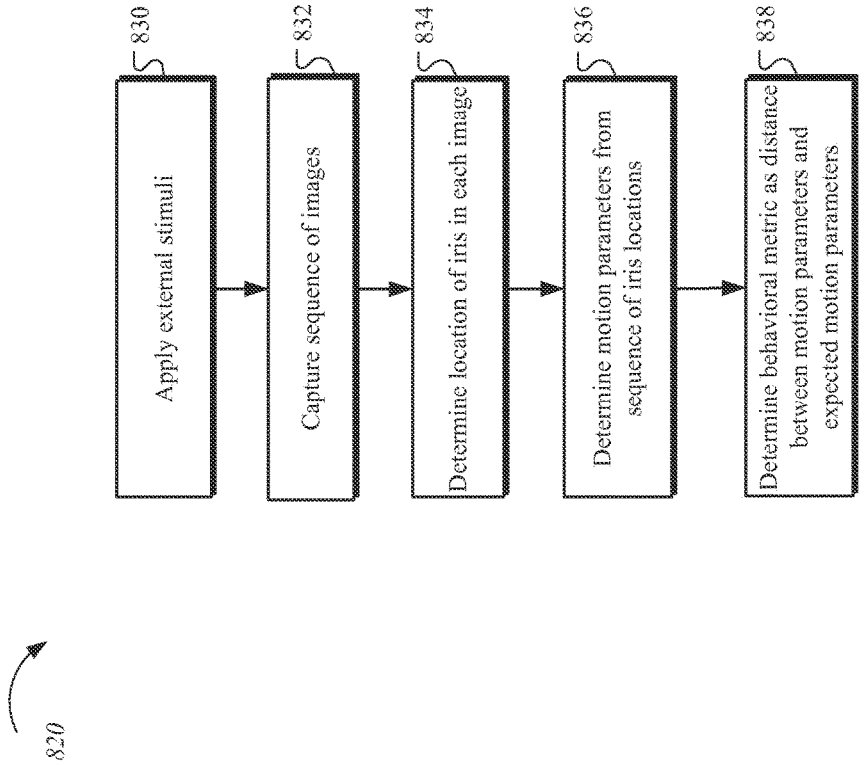
820
830
Apply external stimuli
832
Capture sequence of images
834
Determine location of iris in each image
836
Determine motion parameters from sequence of iris locations
838
Determine behavioral metric as distance between motion parameters and expected motion parameters

Fig. 8B

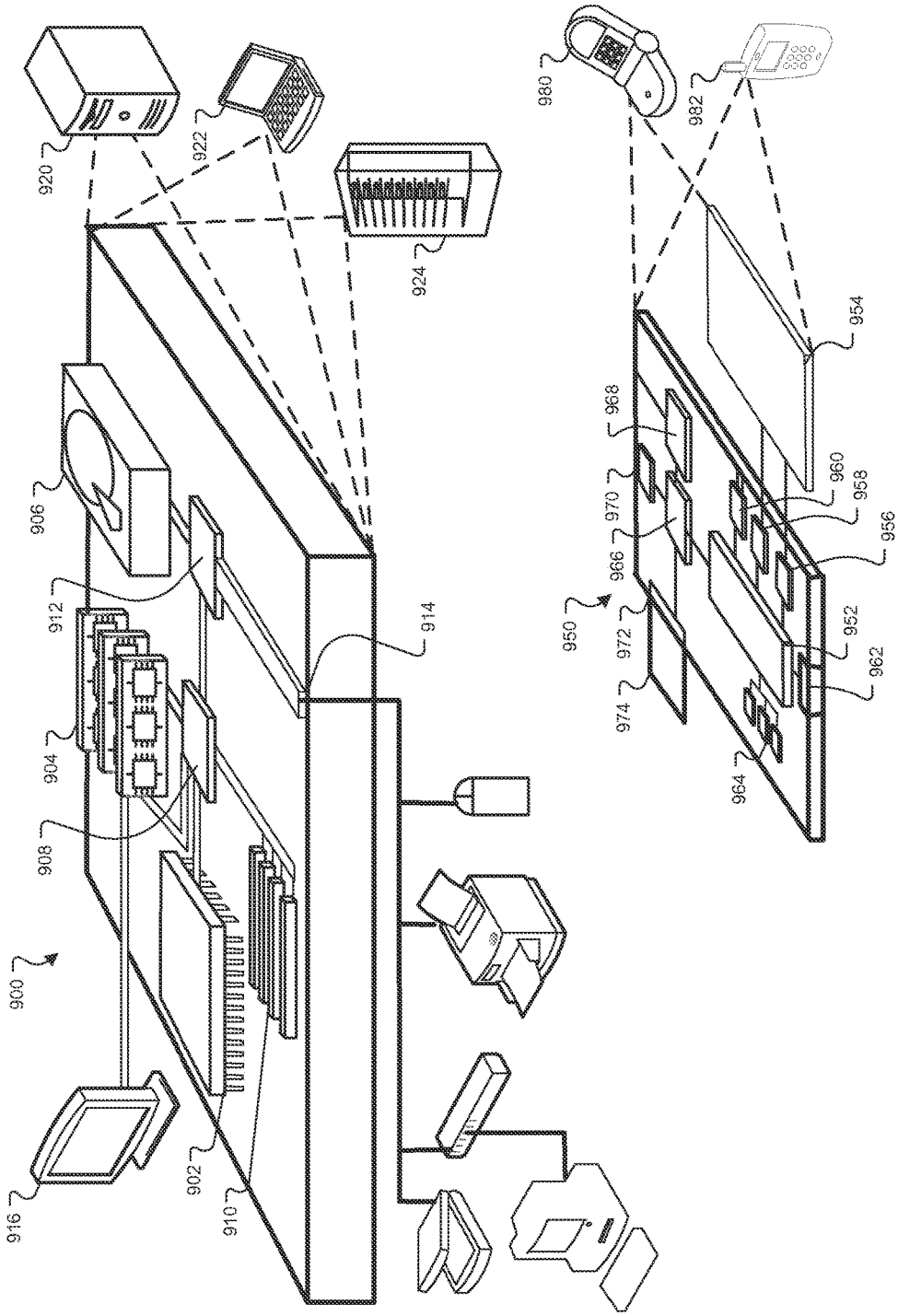
900
902
904
906
908
910
912
914
916
920
922
924
950
952
954
956
958
960
962
964
966
968
970
972
974
980
982

Fig. 9

SPOOF DETECTION FOR BIOMETRIC AUTHENTICATION

CROSS REFERENCE TO RELATED APPLICATION

This application is a continuation of, and claims priority to, patented U.S. patent application Ser. No. 14/335,345, filed on Jul. 18, 2014, entitled "Spoof Detection for Biometric Authentication," which is a continuation of, and claims priority to, patented U.S. patent application Ser. No. 14/216,964, filed on Mar. 17, 2014, entitled "Spoof Detection for Biometric Authentication," which is a continuation of, and claims priority to, patented U.S. patent application Ser. No. 14/059,034, filed on Oct. 21, 2013, entitled "Spoof Detection for Biometric Authentication," which is a continuation of, and claims priority to, abandoned U.S. patent application Ser. No. 13/888,059, filed on May 6, 2013, entitled "Spoof Detection for Biometric Authentication," which is a continuation of, and claims priority to, patented U.S. patent application Ser. No. 13/572,097, filed on Aug. 10, 2012, and entitled "Spoof Detection for Biometric Authentication." The disclosures of the foregoing applications are incorporated herein in their entirety.

TECHNICAL FIELD

The present disclosure relates to biometric authentication based on images of the eye.

BACKGROUND

It is often desirable to restrict access to property or resources to particular individuals. Biometric systems may be used to authenticate the identity of an individual to either grant or deny access to a resource. For example, iris scanners may be used by a biometric security system to identify an individual based on unique structures in the individual's iris.

SUMMARY

This specification describes technologies relating to biometric authentication based on images of the eye. In general, one aspect of the subject matter described in this specification can be embodied in a method that includes obtaining two or more images of a subject including a view of an eye, wherein the images collectively include a plurality of focus distances. The method may further include determining a behavioral metric based on, at least, detected movement of the eye as the eye appears in a plurality of the images. The behavioral metric may be a measure of deviation of detected movement and timing from expected movement of the eye. The method may further include determining a spatial metric based on, at least, a distance from a sensor to a landmark that appears in a plurality of the images each having a different respective focus distance. The method may further include determining a reflectance metric based on, at least, detected changes in surface glare or specular reflection patterns on a surface of the eye as the eye appears in a plurality of the images, wherein the reflectance metric is a measure of changes in glare or specular reflection patches on the surface of the eye. The method may further include determining a score based on, at least, the behavioral, spatial, and reflectance metrics. The method may further include rejecting or accepting the one or more images based on the score.

In general, one aspect of the subject matter described in this specification can be embodied in a system that includes a sensor configured to capture two or more images of a subject including a view of an eye, wherein the images collectively include a plurality of focus distances. The system may further include an illumination element provide photic stimuli in synchronization with the capture of one or more images by the sensor. The system may further include a means for determining a behavioral metric based on, at least, detected movement of the eye as the eye appears in a plurality of the images. The behavioral metric is a measure of deviation of detected movement and timing from expected movement of the eye. The system may further include a module configured to determine a spatial metric based on, at least, a distance from a sensor to a landmark that appears in a plurality of the images each having a different respective focus distance. The system may further include a module configured to determine a reflectance metric based on, at least, detected changes in surface glare or specular reflection patterns on a surface of the eye as the eye appears in a plurality of the images, wherein the reflectance metric is a measure of changes in glare or specular reflection patches on the surface of the eye. The system may further include a module configured to determine a score based on, at least, the behavioral, spatial, and reflectance metrics. The system may further include an interface configured to reject or accept the one or more images based on the score.

In general, one aspect of the subject matter described in this specification can be embodied in a system that includes a data processing apparatus and a memory coupled to the data processing apparatus. The memory having instructions stored thereon which, when executed by the data processing apparatus cause the data processing apparatus to perform operations including obtaining two or more images of a subject including a view of an eye, wherein the images collectively include a plurality of focus distances. The operations may further include determining a behavioral metric based on, at least, detected movement of the eye as the eye appears in a plurality of the images. The behavioral metric may be a measure of deviation of detected movement and timing from expected movement of the eye. The operations may further include determining a spatial metric based on, at least, a distance from a sensor to a landmark that appears in a plurality of the images each having a different respective focus distance. The operations may further include determining a reflectance metric based on, at least, detected changes in surface glare or specular reflection patterns on a surface of the eye as the eye appears in a plurality of the images, wherein the reflectance metric is a measure of changes in glare or specular reflection patches on the surface of the eye. The operations may further include determining a score based on, at least, the behavioral, spatial, and reflectance metrics. The operations may further include rejecting or accepting the one or more images based on the score.

In general, one aspect of the subject matter described in this specification can be embodied in a non-transient computer readable media storing software including instructions executable by a processing device that upon such execution cause the processing device to perform operations that include obtaining two or more images of a subject including a view of an eye, wherein the images collectively include a plurality of focus distances. The operations may further include determining a behavioral metric based on, at least, detected movement of the eye as the eye appears in a plurality of the images. The behavioral metric may be a measure of deviation of detected movement and timing from expected movement of the eye. The operations may further include determining a spatial metric based on, at least, a

distance from a sensor to a landmark that appears in a plurality of the images each having a different respective focus distance. The operations may further include determining a reflectance metric based on, at least, detected changes in surface glare or specular reflection patterns on a surface of the eye as the eye appears in a plurality of the images, wherein the reflectance metric is a measure of changes in glare or specular reflection patches on the surface of the eye. The operations may further include determining a score based on, at least, the behavioral, spatial, and reflectance metrics. The operations may further include rejecting or accepting the one or more images based on the score.

These and other embodiments can each optionally include one or more of the following features. Determining the behavioral metric may include determining an onset, duration, velocity, or acceleration of pupil constriction in response to photic stimuli. The photic stimuli may include a flash pulse. The photic stimuli may include a change in the intensity of light output by a display. The determining the behavioral metric may include determining an onset, duration, or acceleration of gaze transition in response to external stimuli. The external stimuli may include prompts for instructing a user to direct gaze. The external stimuli may include an object depicted in a display that moves within the display. The spatial metric may be a measure of deviation of the subject from a two-dimensional plane. The spatial metric may be a measure of deviation of the subject from an expected three-dimensional shape. Determining the spatial metric may include determining parallax of two or more landmarks that appear in a plurality of the images. Half-tones may be detected in an image captured using reduced dynamic range and the images may be rejected based at least in part on the half-tones. Determining the behavioral metric may include detecting blood flow of the eye as the eye appears in a plurality of the images. Determining the score may include using a trained function approximator to determine the score. The landmark may be a portion of a face depicted in the images. Determining the reflectance metric may include pulsing a flash to illuminate the subject while one or more of the images are being captured, detecting the appearance of glare on the eye from the flash in the images, and measuring the time difference between the pulsing of the flash and the appearance of a corresponding glare on the eye in the images. Determining the reflectance metric may include pulsing a flash to illuminate the subject while one or more of the images are being captured and detecting fine three dimensional texture of a white of the eye by measuring uniformity of a pattern of glare on the eye from the flash in the images. A sensor setting that controls focus may be adjusted to a plurality of different settings during capture of two or more of the images. The images captured with different focus settings may be compared to determine whether these images reflect their respective focus settings. A sensor setting that controls exposure may be adjusted to a plurality of different settings during capture of two or more of the images. The images captured with different exposure settings may be compared to determine whether these images reflect their respective exposure settings. A sensor setting that controls white balance may be adjusted to a plurality of different settings during capture of two or more of the images. The images captured with different white balance settings may be compared to determine whether these images reflect their respective white balance settings.

Particular embodiments of the invention can be implemented to realize none, one or more of the following advantages. Some implementations may provide security by reliably authenticating individuals. Some implementations may prevent spoofing of an eye biometric based authentication system using objects that are not a living human eye.

The details of one or more embodiments of the invention are set forth in the accompanying drawings and the description below. Other features, aspects, and advantages of the invention will become apparent from the description, the drawings, and the claims.

BRIEF DESCRIPTION OF THE DRAWINGS

FIG. **1** is a diagram of the anatomy of a human eye.

FIG. **2** is a diagram of an example image including portions showing vasculature of the white of an eye.

FIG. **3** is a diagram of an example image that is segmented for analysis.

FIG. **4** is a block diagram of example security system that is configured to authenticate an individual based in part on one or more images of the white of an eye.

FIG. **5** is a block diagram of an example online environment.

FIG. **6** is a flow chart of an example process for authenticating an individual based on one or more images of the white of an eye, where the liveness of the eye in the obtained images for authentication is checked.

FIG. **7** is a flow chart of an example process for determining a liveness score for one or more images of an eye.

FIG. **8**A is a flow chart of an example process for determining a behavioral metric based on constriction of a pupil in response to photic stimulus.

FIG. **8**B is a flow chart of an example process for determining a behavioral metric based on gaze transition of an iris in response to external stimulus.

FIG. **9** shows an example of a computer device and a mobile computer device that can be used to implement the techniques described here.

DETAILED DESCRIPTION

Distinctive features of an individual's visible vasculature in the whites of the eyes may be used to identify or authenticate the individual. For example, images of the white of a user's eye can be obtained and analyzed to compare features of the eye to reference record in order to authenticate the user and grant or deny the user access to a resource. Adversaries or intruders could attempt spoof a security system using such an authentication method by presenting something other than a live eye (e.g., a picture of an authorized user's face or a plastic model of an authorized user's eye) to the security system's light sensor. Some spoof attempts may be frustrated by configuring a security system to analyze the obtained images to discriminate images of live eyes from images of props.

One or more liveness metrics can be calculated that reflect properties a live eye is expected to exhibit that may not be exhibited by certain spoof attempts. For example, stimuli can be applied to a user during the image acquisition process and the response of an eye depicted in the images may be quantified with a metric compared to an expected response of a live eye to those stimuli. In some implementations, the obtained images can be checked at a plurality of focus distances to determine if the eye depicted in the images is three dimensional (e.g., does it have landmarks that appear to be positioned at distances from the sensor that deviated from a single plane). In some implementations, a metric related to the reflectance of the eye may be determined. A live eye has unique reflectance properties caused by its three

dimensional shape and its fine surface texture and moisture that may not be exhibited by many spoof attack props. For example, a flash device may be used to illuminate the subject during a portion of the image acquisition process and the timing and quality of the reflection of the flash pulse on the subject's eye may analyzed to determine if it is indeed a live eyeball being imaged in real time.

In some implementations, a plurality of liveness metrics may be combined to determine a liveness score or decision that reflects the likelihood that the images depict a live eye, as opposed to, for example, an image of model or a two-dimensional picture of an eye. For example, a trained function approximator (e.g., a neural network) can be used to determine, based on a plurality of liveness metrics, a liveness score. The images obtained can then be accepted or rejected based on the liveness score. In some implementations, a spoof attempt may be reported when the liveness score indicates that the images do not depict a live eye.

FIG. **1** is a diagram of the anatomy of a human eye **100**. The diagram is a cross-section of the eye with a blowup **102** of the anatomy near the corneal limbus boundary of the eye that separates the colored iris **110** from the surrounding white of the eye. The white of the eye includes a complex vascular structure which is not only readily visible and scannable from outside of the eye, but in addition that vascular structure is unique and varies between individuals. Thus, these vascular structures of the white of the eye, mostly due to vasculature of conjunctiva and episclera, can be scanned and advantageously used as a biometric. This biometric can be used to authenticate a particular individual, or, identify an unknown individual.

The white of the eye has a number of layers. The sclera **120** is an opaque, fibrous, protective, layer of the eye containing collagen and elastic fiber. The sclera **120** is covered by the episclera **130**, which has a particularly large number of blood vessels and veins that that run through and over it. The episclera **130** is covered by the bulbar conjunctiva **140**, which is a thin clear membrane that interfaces with the eyelid **150** or the environment when the eyelid is opened. Blood vessels and veins run through all of these layers of the white of the eye and can be detected in images of the eye. The eye also includes eyelashes **160** that may sometimes obscure portions of the white of the eye in an image.

FIG. **2** is a diagram of an example image **200** including portions showing vasculature of the white of an eye. Such an image **200** may be captured with a sensor (e.g., a camera) that is integrated into a computing device such as, for example, a smart phone, a tablet computer, a television, a laptop computer, or a personal computer. For example, a user may be prompted through a display or audio prompt to look to the left while the image is captured, thus exposing a larger area of the white of the eye to the right of the iris to the view of the sensor. Similarly, a user may be prompted to look right, up, down, straight, etc. while an image is captured. The example image includes a view of an iris **220** with a pupil **210** at its center. The iris **220** extends to the corneal limbus boundary **225** of the eye. The white **230** of the eye is external to a corneal limbus boundary **225** of the eye. An extensive vasculature **240** of the white of the eye is visible in the image **100**. This vasculature **240** may be distinctive for an individual. In some implementations, distinctive features of the vasculature **240** may be used as a basis for identifying, verifying, or authenticating an individual user.

FIG. **3** is a diagram of an example image **300**, including portions showing vasculature of the whites of two eyes, that is segmented for analysis. A captured image **310** may be obtained in a variety of ways. The captured image **310** may be preprocessed and segmented to isolate regions of interest within the image and enhance the view of vasculature in the whites of the eyes. For example, the regions of interest may be tiled portions that form grids covering some or all the whites of the eyes. A portion **320** of the corresponding to the white of the right eye left of the iris may be isolated, for example, by identifying the corneal limbus boundary and the edges of the eyelids. Similarly, a portion **322** corresponding to the white of the left eye left of the iris may be isolated. Preprocessing may be used to enhance the view of the vasculature in this region, for example, by selecting a component color from the image data that maximizes the contrast between the vasculature and the surrounding white portions of the whites of the eyes. In some implementations, these portions **320**, **322** of the image may be further segmented into tiles forming grids **330**, **332** that divide an exposed surface area of the whites of the eyes into smaller regions for analysis purposes. Features of the vasculature in these regions of interest may be used for identification, verification, or authentication of an individual.

FIG. **4** is a block diagram of example security system **400** that is configured to authenticate an individual based in part on one or more images of the white of an eye **410**. A user of the security system **400** may present their eye **410** to a light sensor **420**. In this manner one or more images of the white of the eye **410** may be captured. A digital camera, a three-dimensional (3D) camera, and a light field sensor are examples of light sensors that may be employed. The light sensor **420** may employ a variety of technologies, e.g., digital charge-coupled devices (CCD) or complementary metal-oxide-semiconductors (CMOS). In some implementations, the user may be prompted via messages shown on display **424** to make certain poses to expose portions of the white of the eye **410** and facilitate image acquisition. For example, the user may be prompted to direct their gaze in order to roll the iris of their eye **410** left, right, up, up-left, and roll up-right. In some implementations, not shown, the user may be prompted to assume poses though messages played through a speaker, through indicator lights (e.g. LEDs), or not prompted at all.

In some implementations, the sensor **420** can be configured to detect when the eye **410** has been properly positioned in the field of view of the sensor. Alternatively, software or firmware implemented on a computing device **430** can analyze one or more images produced by the light sensor **420** to determine whether the eye **410** has been properly positioned. In some implementations, the user may manually indicate when the eye **410** is properly positioned through a user interface (e.g., button, keyboard, keypad, touchpad, or touch screen).

An authentication module **440** implemented on the computing device **430** may obtain one or more images of the white of the eye through the light sensor **420**. In some implementations, the computing device **430** is integrated with or electrically coupled to the light sensor **420**. In some implementations, the computing device **430** may communicate with the light sensor **420** through a wireless interface (e.g., an antenna).

The authentication module **440** processes images obtained through the light sensor **420** to control access to a secured device **450**. For example, the authentication module **440** may implement authentication processes described in relation to FIG. **6**. In some implementations, the secured device **450** may include an actuator **460** (e.g., a locking mechanism) that affects the access control instructions from the authentication module **440**.

The computing device may be integrated with or interface with the secured device **450** in a variety of ways. For example, the secured device **450** may be an automobile, the light sensor **420** may be a camera integrated in the steering wheel or dashboard of the automobile, and the computing device **430** may be integrated in the automobile and electrically connected to the camera and an ignition locking system that serves as the security actuator **460**. A user may present views of the whites of their eye to the camera in order to be authenticated as an authorized driver of the automobile and start the engine.

In some implementations, the secured device **450** may be a real estate lock box, the light sensor **420** may be a camera integrated with the user's mobile device (e.g., a smartphone or tablet device), and the processing of the authentication module **440** may be performed in part by the user's mobile device and in part by a computing device integrated with the lock box that controls a power locking mechanism. The two computing devices may communicate through a wireless interface. For example, the user (e.g., a realtor giving a showing of a property) may use the camera on their mobile device to obtain one or more images and submit data based on the images to the lock box in order to be authenticated as authorized user and granted access to keys stored in the lock box.

In some implementations, the secured device **450** is a gate or door that controls access to a property. The light sensor **420** may be integrated in the door or gate or positioned on a wall or fence near the door or gate. The computing device **430** may be positioned nearby and may communicate through a wireless interface with the light sensor **420** and a power locking mechanism in the door or gate that serves as an actuator **460**. In some implementations, the secured device **450** may be a rifle and the light sensor **420** may be integrated with a scope attached to the rifle. The computing device **430** may be integrated in the butt of the rifle and may electronically connect to the light sensor **420** and a trigger or hammer locking mechanism that serves as an actuator **460**. In some implementations, the secured device **450** may be a piece of rental equipment (e.g., a bicycle).

The computing device **430** may include a processing device **432** (e.g., as described in relation to FIG. **9**) and a machine-readable repository, or database **434**. In some implementations, the machine-readable repository may include flash memory. The machine-readable repository **434** may be used to store one or more reference records. A reference record may include data derived from one or more images of the white of an eye for a registered our authorized user of the secured device **450**. In some implementations, the reference record includes complete reference images. In some implementations the reference record includes features extracted from the reference images. In some implementations the reference record includes encrypted features extracted from the reference images. In some implementations the reference record includes identification keys encrypted by features extracted from the reference images. To create a reference record for a new user and enrollment or registration process may be carried out. An enrollment process may include the capture of one or more reference images of the white of a new registered user's eye. In some implementations, the enrollment process may be performed using the light sensor **420** and processing device **430** of authentication system **400**.

FIG. **5** is a block diagram showing an example of a network environment **500** on which the techniques described herein may be implemented. Network environment **500** includes computing devices **502**, **504**, **506**, **508**, **510** that are configured to communicate with a first server system **512** and/or a second server system **514** over a network **511**. Computing devices **502**, **504**, **506**, **508**, **510** have respective users **522**, **524**, **526**, **528**, **530** associated therewith. The first and second server systems **512**, **514** each include a computing device **516**, **517** and a machine-readable repository, or database **518**, **519**. Example environment **500** may include many thousands of Web sites, computing devices and servers, which are not shown.

Network **511** may include a large computer network, examples of which include a local area network (LAN), wide area network (WAN), the Internet, a cellular network, or a combination thereof connecting a number of mobile computing devices, fixed computing devices, and server systems. The network(s) included in network **511** may provide for communications under various modes or protocols, examples of which include Transmission Control Protocol/Internet Protocol (TCP/IP), Global System for Mobile communication (GSM) voice calls, Short Electronic message Service (SMS), Enhanced Messaging Service (EMS), or Multimedia Messaging Service (MMS) messaging, Ethernet, Code Division Multiple Access (CDMA), Time Division Multiple Access (TDMA), Personal Digital Cellular (PDC), Wideband Code Division Multiple Access (WCDMA), CDMA2000, or General Packet Radio System (GPRS), among others. Communication may occur through a radio-frequency transceiver. In addition, short-range communication may occur, e.g., using a BLUETOOTH, WiFi, or other such transceiver system.

Computing devices **502**, **504**, **506**, **508**, **510** enable respective users **522**, **524**, **526**, **528**, **530** to access and to view documents, e.g., web pages included in web sites. For example, user **522** of computing device **502** may view a web page using a web browser. The web page may be provided to computing device **502** by server system **512**, server system **514** or another server system (not shown).

In example environment **500**, computing devices **502**, **504**, **506** are illustrated as desktop-type computing devices, computing device **508** is illustrated as a laptop-type computing device **508**, and computing device **510** is illustrated as a mobile computing device. It is noted, however, that computing devices **502**, **504**, **506**, **508**, **510** may include, e.g., a desktop computer, a laptop computer, a handheld computer, a television with one or more processors embedded therein and/or coupled thereto, a tablet computing device, a personal digital assistant (PDA), a cellular telephone, a network appliance, a camera, a smart phone, an enhanced general packet radio service (EGPRS) mobile phone, a media player, a navigation device, an electronic messaging device, a game console, or a combination of two or more of these data processing devices or other appropriate data processing devices. In some implementations, a computing device may be included as part of a motor vehicle (e.g., an automobile, an emergency vehicle (e.g., fire truck, ambulance), a bus).

Users interacting with computing devices **502**, **504**, **506**, **508**, **510** can interact with a secure transaction service **523** hosted, e.g., by the server system **512**, by authenticating themselves and issuing instructions or orders through the network **511**. The secure transactions may include, e.g., e-commerce purchases, financial transactions (e.g., online banking transactions, credit or bank card transactions, loyalty reward points redemptions), or online voting. The secured transaction service may include an authentication module **525** that coordinates authentication of users from the secured server's side of the interaction. In some implementations, authentication module **525** may receive image data

from a user device (e.g., computing devices **502**, **504**, **506**, **508**, **510**) that includes one or more images of the eye of a user (e.g., users **522**, **524**, **526**, **528**, **530**). The authentication module may then process the image data to authenticate the user by determining if the image data matches a reference record for a recognized user identity that has been previously created based on image data collected during an enrollment session.

In some implementations, a user who has submitted a request for service may be redirected to an authentication module **540** that runs on separate server system **514**. Authentication module **540** may maintain reference records for registered or enrolled users of the secure transaction service **523** and may also include reference records for users of other secure transaction services. Authentication module **540** can establish secure sessions with various secure transaction services (e.g., secure transaction service **523**) using encrypted network communications (e.g., using a public key encryption protocol) to indicate to the secure transaction service whether the user has been authenticated as a registered or enrolled user. Much like authentication module **525**, authentication module **540** may receive image data from the requesting user's computing device (e.g., computing devices **502**, **504**, **506**, **508**, **510**) and may process the image data to authenticate the user. In some implementations, the authentication module may determine liveness scores for images received from a user and may accept or reject the images based on the liveness scores. When an image is rejected as a spoof attempt presenting something other than a live eye, the authentication module **540** may send network communication messages to report the spoof attempt to the secure transaction service **523** or a relevant authority.

The authentication module **540** may be implemented as software, hardware or a combination of software and hardware that is executed on a processing apparatus, such as one or more computing devices (e.g., a computer system as illustrated in FIG. **9**).

A user device (e.g., computing device **510**) may include an authentication application **550**. The authentication application **550** may facilitate the authentication of the user as a registered or enrolled user identity for the purpose of accessing secured services (e.g., secure transaction service **523**) through a network **511**. For example, the authentication application **550** may be a mobile application or another type client application for interacting with a server-side authentication module (e.g., authentication module **540**). The authentication application **550** may drive a sensor (e.g., a camera connected to or integrated with a user computing device) to capture one or more images of a user (e.g., user **530**) that include views of the white of the user's eye. The authentication application **550** may prompt (e.g., through a display or speakers) the user to pose for image capture. For example, the user may be prompted to face the sensor and direct their gaze left or right to expose large portions of the white of an eye to the sensor.

In some implementations, the authentication application **550** transmits captured image data to an authentication module (e.g., authentication modules **525** or **540**) on a remote server (e.g., server systems **512** or **514**) through the network **511**. The collection of image data from user may facilitate enrollment and the creation of a reference record for the user. The collection of image data from user may also facilitate authentication against a reference record for a user identity.

In some implementations, additional processing of the image data for authentication purposes may be performed by the authentication application **550** and the results of that processing may be transmitted to an authentication module (e.g., authentication modules **525** or **540**). In this manner, the authentication functions may be distributed between the client and the server side processes in a manner suited a particular application. For example, in some implementations, the authentication application **550** determines liveness scores for captured images and rejects any images with liveness scores that indicate a spoof attack. If a liveness score indicates a live eye, image data, based on the accepted images, may be transmitted to a server side authentication module (e.g., authentication modules **525** or **540**) for further analysis.

In some implementations, the authentication application accesses a reference record for a user identity and conducts a full authentication process, before reporting the result (e.g., user accepted or rejected) to a server side authentication module.

The authentication application **550** may be implemented as software, hardware or a combination of software and hardware that is executed on a processing apparatus, such as one or more computing devices (e.g., a computer system as illustrated in FIG. **9**).

FIG. **6** is a flow chart of an example process **600** for authenticating an individual based on one or more images of the white of an eye. A liveness score is determined for the obtained images and used to accept or reject the images. When an image of a live eye is detected and accepted, the image is further analyzed to determine a match score by extracting features from the image and comparing the features to a reference record. The user is then accepted or rejected based on the match score.

The process **600** can be implemented, for example, by the authentication module **440** in the computing device **430** of FIG. **4**. In some implementations, the computing device **430** is a data processing apparatus that includes one or more processors that are configured to perform actions of the process **600**. For example, the data processing apparatus may be a computing device (e.g., as illustrated in FIG. **9**). In some implementations, process **600** may be implemented in whole or in part by the authentication application **550** that is executed by a user computing device (e.g., computing device **510**). For example, the user computing device may be a mobile computing device (e.g., mobile computing device **950** of FIG. **9**). In some implementations, process **600** may be implemented in whole or in part by the authentication module **540** that is executed by a user server system (e.g., server system **514**). In some implementations, the server system **514** is a data processing apparatus that includes one or more processors that are configured to perform actions of the process **600**. For example, the data processing apparatus may be a computing device (e.g., as illustrated in FIG. **9**). In some implementations, a computer readable medium can include instructions that when executed by a computing device (e.g., a computer system) cause the device to perform actions of the process **600**.

One or more images of an eye are obtained **602**. The images include a view of a portion of a vasculature of the eye external to a corneal limbus boundary of the eye. The obtained images may be monochrome or represented in various color spaces (e.g., RGB, SRGB, HSV, HSL, or YCbCr). In some implementations, an image may be obtained using a light sensor (e.g., a digital camera, a 3D camera, or a light field sensor). The sensor may be sensitive to light in various ranges of wavelength. For example, the sensor may be sensitive to the visible spectrum of light. In some implementations, the sensor is paired with a flash or torch that can be pulsed to illuminate objects in view of the

sensor. The capture of images can be synchronized or time-locked with pulsing of a flash. In some implementations, the sensor captures a sequence of images that can be used to track motion of objects within the field of view of the sensor. The sensor can include one more settings that control image capture (e.g., focus distance, flash intensity, exposure, and white balance). The images can collectively include a plurality of focus distances. For example, a sequence of images may be captured, each image captured with a different focus distance settings for the sensor and/or some sensors (e.g., a light field sensor) can capture an image that is focused at a plurality of distances from the sensor. In some implementations, the one or more images can be obtained **502** by reception through a network interface (e.g., a network interface of server system **514**).

A liveness score can then be determined **604** for the one or more images. In some implementations, image data elements (e.g., a voxel, a pixel, a ray, or a red, green or blue channel value) are input directly to a trained function approximator that outputs a liveness score. The function approximator can be trained using data corresponding to training images of both live eyes and spoof props that are paired with ideal scores (e.g., 1 for live eyes and 0 for spoof props). The function approximator or classifier models the mapping from input data (i.e., the training image data or features) to output data (i.e., the resulting liveness score or binary decision) with a set of model parameters. The model parameter values are selected using a training algorithm that is applied to the training data. For example, the function approximator can be based the following models: linear regression, Volterra series, Wiener series, radial basis functions, kernel methods, polynomial methods; piecewise linear models, Bayesian classifiers, k-nearest neighbor classifiers, neural networks, support vector machines, or fuzzy function approximator. Other models are possible. In some implementations, the liveness score may be binary.

In some implementations, the liveness score is determined **604** based on one or more liveness metrics that in turn are determined based on the obtained images. Some examples of such a process are described in relation to FIG. **7**.

For example, the liveness score can be determined **604** by the authentication module **440**, the authentication application **550**, authentication module **525**, or the authentication module **540**.

The liveness score is checked **606** to determine whether the images are likely to include a view of a live eye. In some implementations, the liveness score can be compared to a threshold.

If the liveness score indicates a low likelihood of a live eye and thus a high likelihood of a spoof attack, the one or more images are rejected **608**. In some implementations, a spoof attack may then be reported **610**. In some implementations, the spoof attack is reported **610** through a display or speaker (e.g., with an alarm sound or flashing display). In some implementations, the spoof attack is reported **610** by transmitting one or messages over a network using a network interface. The user may then be rejected **630** and denied access to secured device or service.

In some implementations (not shown), a check may be performed to verify that obtained images were captured from a particular sensor and that that the particular sensor has not been bypassed by the submission of spoofed image data. For example, during image capture, one or more sensor configuration settings may be adjusted to take on different settings during capture of two or more of the images. These different settings are expected to be reflected in the obtained image data. If changes in the image data between images with different settings, it may indicate that the sensor has been bypassed by a spoof attack. For example, sensor configuration settings controlling focus, exposure time, or white balance may be adjusted in this manner. If corresponding changes in the obtained image data are not detected, the obtained images may be rejected **608**.

If the liveness score indicates a high likelihood that live eye is depicted in the images, the one or more images are accepted **616** and subjected to further analysis to complete the authentication process.

The one or more images may be segmented **620** to identify regions of interest that include the best views of vasculature in the white of an eye. In some implementations, anatomical landmarks (e.g., an iris, its center and corneal limbus boundary, eye corners, and the edges of eyelids) may be identified in the one or more images. Regions of interest within the image may be identified and selected based on their location in relation to the identified anatomical landmarks. For example, regions of interest may be located in the white of eye to the left, right, above, or below the iris. In some implementations, the selected regions of interest are tiled to form a grid covering a larger portion of the white of the eye. In some implementations, the selected regions of the image are noncontiguous (e.g., neighboring regions may overlap or neighboring regions may have space between them). The selected regions of interest may correspond to regions of interest selected from a reference image on which data in a reference record is based.

In some implementations, eye corners are found by fitting curves on the detected portions of the eyelid over sclera, and then extrapolating and finding the intersection of those curves. If one intersection (corner) cannot be found due to the fact that the iris was too close (e.g., due to gaze direction), then a template from the same corner area but from the opposite gaze direction photo can be derived and applied to the problematic corner neighborhood in the image at hand, and the maximum correlation location can be tagged as the corner.

In some implementations, eyelids are found by adaptive thresholding methods that find the white of the eye from the image, which border the eyelids. The sclera mask itself can be corrected by morphological operations (e.g., convex hull) to take out aberrations.

In some implementations, the limbic boundary is found from the sclera mask as where the sclera ends due to its termination at the iris limbic boundary.

In some implementations, the iris center is found through multiple methods. If the eye color is light, the center of the pupil can be found as the iris center. If the iris is too dark, then the center of the ellipsoid fitted to the limbic boundary and its center is found, or it is determined as the focal point of normal rays (i.e., lines perpendicular to tangents to the limbic boundary) converging around the iris center, or a combination of the above methods.

The image regions may be preprocessed **622** to enhance the view of a vasculature within an image. In some implementations, preprocessing **622** includes Color Image Enhancement and Contrast Limited Adaptive Histogram Equalization (CLAHE) which enhances the contrast of the intensity image. CLAHE operates in small regions of the image called tiles. Each tile's contrast is enhanced such that the histogram of the output approximately matches the histogram specified by particular distribution (e.g., uniform, exponential, or Rayleigh distribution). The neighboring tiles are then combined using bilinear interpolation to eliminate the artificially induced boundaries. In some implementations, the images may be enhanced by selecting one of the

red, green or blue color components which has the best contrast between the vessels and the background. The green component may be preferred because it may provide the best contrast between vessels and background.

In some implementations, preprocessing **622** includes application of a multi-scale enhancement filtering scheme to enhance the intensity of the images thereby facilitating detection and subsequent extraction features of the vascular structure. The parameters of the filter may be determined empirically so as to account for variations in the girth of the blood vessels. The algorithm used may have good sensitivity, good specificity for curves and suppresses objects of other shapes. The algorithm may be based on the second derivatives of the image. First, since the second derivatives are sensitive to noise, an image segment is convolved with a Gaussian function. The parameter σ of the Gaussian function may correspond to the thickness of a blood vessel. Next, for each image data element, a Hessian matrix may be built and eigenvalues $\lambda 1$ and $\lambda 2$ may be computed. In each Hessian matrix ridges are defined as points where the image has an extremum in the direction of the curvature. The direction of the curvature is the eigenvector of the second order derivatives of the image that corresponds to the largest absolute eigenvalue λ. The sign of the eigenvalue determines if it is a local minimum $\lambda>0$ or maximum $\lambda<0$. The computed eigenvalues are then used to filter the blood vessel line with the equations:

$$I_line(\lambda 1,\lambda 2)=|\lambda 1|-|\lambda 2| \text{ if } \lambda 1<0 \text{ and } I_line(\lambda 1,\lambda 2)=0 \text{ if } \lambda 1\geq 0$$

The diameter of the blood vessels varies but the algorithm assumes the diameter is within an interval, [d0, d1]. Gaussian smoothing filters may be employed in the scale range of [d0/4, d1/4]. This filtering may be repeated N times based on the smoothing scales:

$$\sigma 1=d0/4,\sigma 2=r*\sigma 1,\sigma 2=r\hat{}2*\sigma 1, \ldots \sigma 2= r\hat{}(N-1)*\sigma 1=d1/4$$

This final output may be the maximum value from the output of all individual filters of N scales.

Features are determined **624** for each image region that reflect structure or properties of the vasculature visible in that region of the user's eye. In some implementations, minutia detection methods may be used to extract features of the user's vasculature. Examples of minutia detection processes are described in U.S. Pat. No. 7,327,860.

In some implementations, features may be determined **624** in part by applying a set of filters to the image regions that correspond to texture features of those image regions. For example, features may be determined in part by applying a set of complex Gabor filters at various angles to the image. The parameters of the filter can be determined empirically so as to account for variations in the spacing, orientation, and girth of the blood vessels. The texture features of an image can be measured as the amount of sharp visible vasculature in the region of interest. This quality can be determined with the ratio of area of sharp visible vasculature to the area of region of interest. The phase of Gabor filtered image, when binarized using a threshold, may facilitate detection and reveal sharp visible vasculature.

The phase of complex Gabor filtered image reflects the vascular patterns at different angles when the Gabor filter kernel is configured with Sigma=2.5 Pixel, Frequency=6; and Gamma=1. The choice of frequency may be dependent on the distance between vessels, which in turn depends on the resolution and distance between image acquisition system and the subject. These parameters may be invariant to images. For example, the kernel parameters may be derived for eye images captured at a distance of 6-12 centimeters away from the eye using a particular sensor (e.g. a back camera on a smartphone) and the segmented sclera region can be resized to a resolution of (e.g., 401×501 pixels) for the analysis. Visible eye surface vasculature may be spread in all the directions on white of the eye. For example, the Gabor kernels may be aligned across six different angles (Angle=0, 30, 60, 90, 120, and 150 degrees). The phase of the Gabor-filtered images may vary from $-\pi$ to $+\pi$ radians. Phase values above 0.25 and below −0.25 radians may correspond to vascular structures. To binarize the phase image using thresholding, all values of phase above 0.25 or below −0.25 may be set to one and the remaining values to zero. This may result in a sharp vasculature structure in corresponding phase image. This operation can be performed for images resulting from applications of all six Gabor kernels at different angles. All the six binarized images may be added, to reveal a fine and crisp vascular structure. In some implementations, a vector of the elements of the binarized phase images may be used as a feature vector for comparing the image to a reference record. In some implementations, differences in textural features between image regions of interest may be used as a feature vector. The sum of all the 1's in a binarized image area divided by the area of region of interest may reflect the extent of the visible vasculature.

A match score is determined **626** based on the features and corresponding features from a reference record. The reference record may include data based at least in part on one or more reference images captured during an enrollment or registration process for a user. In some implementations, a match score may be determined **626** as a distance (e.g., a Euclidian distance, a correlation coefficient, modified Hausdorff distance, Mahalanobis distance, Bregman divergence, cosine similarity, Kullback-Leibler distance, and Jensen-Shannon divergence) between a vector of features extracted from the one or more obtained images and a vector of features from the reference record. In some implementations, the match score may be determined **626** by inputting features extracted from the one or more obtained images and features from the reference record to a trained function approximator.

In some implementations, a quality based fusion match score is determined **626** based on match scores for multiple images of the same vasculature. In some implementations, match scores for multiple images are combined by adding the match scores together in weighted linear combination with weights that respectively depended on quality scores determined for each of the multiple images. Other examples of techniques that may be used to combine match scores for multiple images based on their respective quality scores include hierarchical mixtures, sum rule, product rule, gated fusion, Dempster-Shafer combination, and stacked generalization, among others.

In some implementations, the match score is determined **626** by an authentication module (e.g., authentication module **440** running on computing device **430**).

The match score may be checked **628** to determine whether there is a match between the one or more obtained images and the reference record. For example the match score may be compared to a threshold. A match may reflect a high likelihood that the user whose eye is depicted in the one or more obtained images is the same as an individual associated with the reference record.

If there is no match, then the user may be rejected **630**. As a result, the user may be denied access to a secure device or

service (e.g., secured device **450** or secure transaction service **523**). In some implementations, the user may be informed of the rejection **630** through a message that is shown on a display or played through a speaker. In some implementations, the rejection may be affected by transmitting a message through a network reflecting the status of the user as rejected. For example, the authentication module **540**, upon rejecting user **530** may transmit a rejection message to the secure transaction server **523** using a network interface of server system **514**. The authentication module **540** may also send a rejection message to user computing device **510** in this scenario.

If there is a match, then the user may be accepted **632**. As a result, the user may be granted access to a secure device or service (e.g., secured device **450** or secure transaction service **523**). In some implementations, the user may be informed of the acceptance **632** through a message that is shown on a display or played through a speaker. In some implementations, the acceptance may be affected by transmitting a message through a network reflecting the status of the user as accepted. For example, the authentication module **540**, upon accepting user **530** may transmit an acceptance message to the secure transaction server **523** using a network interface of server system **514**. The authentication module **540** may also send an acceptance message to user computing device **510** in this scenario.

FIG. **7** is a flow chart of an example process **700** for determining a liveness score for one or more images of an eye. One or more liveness metrics are determined **710** for the images and the liveness score is determined **730** based on the one or more liveness metrics.

The process **700** can be implemented, for example, by the authentication module **440** in the computing device **430** of FIG. **4**. In some implementations, the computing device **430** is a data processing apparatus that includes one or more processors that are configured to perform actions of the process **700**. For example, the data processing apparatus may be a computing device (e.g., as illustrated in FIG. **9**). In some implementations, process **700** may be implemented in whole or in part by the authentication application **550** that is executed by a user computing device (e.g., computing device **510**). For example, the user computing device may be a mobile computing device (e.g., mobile computing device **950** of FIG. **9**). In some implementations, process **700** may be implemented in whole or in part by the authentication module **540** that is executed by a user server system (e.g., server system **514**). In some implementations, the server system **514** is a data processing apparatus that includes one or more processors that are configured to perform actions of the process **700**. For example, the data processing apparatus may be a computing device (e.g., as illustrated in FIG. **9**). In some implementations, a computer readable medium can include instructions that when executed by a computing device (e.g., a computer system) cause the device to perform actions of the process **700**.

Process **700** starts **702** when one or more images are received for processing. For example, the one or more images may be encoded as two, three, or four dimensional arrays of data image elements (e.g., a pixel, a voxel, a ray, or a red, green or blue channel value).

One or more liveness metrics may then be determined **710** based on the one or more images. In this example, a behavioral metric is determined **712** based on detected movement of the eye as the eye appears in a plurality of the images. The behavioral metric can be a measure of deviation of detected movement and timing from expected movement of the eye.

In some implementations, photic stimuli (e.g., a flash pulse, a change brightness of an LCD display) are applied to a subject while the images are being captured. In response to these photic stimuli, a pupil of a live eye is expected to constrict to adapt to the change in illumination. Further the pupil is expected to constrict in a certain way over time with, an onset time that depends on the reaction time of a user, a duration of the constriction movement required to reach a new steady state pupil diameter, an average velocity of constriction, and a particular acceleration curve for the constriction motion. By examining a sequence of images captured before and after the start of a photic stimulus, one or more parameters of a detected motion may be determined and compared to one or more parameters of the expected motion. A substantial deviation from the expected motion in response to the photic stimuli may indicate the subject in view of the camera is not a live eye and there is spoof attack occurring. An example of this implementation is described in relation to FIG. **8**A.

In some implementations, a behavioral metric may be determined **712** by applying external stimuli (e.g., prompts instructing a user to direct their gaze or a display showing a moving object that user follows with their eyes) to a subject during image capture and tracking the gaze transitions that may result. In response to these external stimuli, a live eye is expected to move in a certain way over time. Some parameters of an expected gaze transition motion may include an onset time that depends on the reaction time of a user, a duration of the gaze transition movement required to reach a new steady state gaze direction, an average velocity, and a particular acceleration curve for the gaze transition motion. By examining a sequence of images captured before and after the start of an external stimulus, one or more parameters of a detected motion may be determined and compared to one or more parameters of the expected motion. A substantial deviation from the expected motion in response to the external stimuli may indicate the subject in view of the camera is not a live eye and there is spoof attack occurring. An example of this implementation is described in relation to FIG. **8**B.

In some implementations, determining **712** a behavioral metric may include detecting flow of blood in a vasculature of the white of the eye (e.g. vasculature in the episclera). A sequence of images may be analyzed to detect changes in hue and changes in visible width of veins and blood vessels in the white of the eye that occur over time. The vasculature of a live eye is expected to exhibit regular changes in vessel widths and hue that correspond to a user's pulse. A substantial deviation from the expected blood flow pattern may indicate the subject in view of the camera is not a live eye and there is spoof attack occurring.

For example, consider a section of vasculature between two branching points or sharp bends. The tubular body of that vessel change shape and color when the heart is pumping blood through it. In some implementations, 300 frames or images may be captured over a 10 second period. Image regions may be registered from one capture instance to the next. The blood flow may then be measured by comparing the physical dimensions (2d or 3d) of points of interest along blood vessels over time, as well as the coloration of those vessels over time. In this manner, changes consistent with pulse can be detected. For example if the measure "pulse" signal resembled a square wave that would not be consistent with a natural circulatory system. If it consisted of spikes (both vessel dilation and appropriate coloration change) at regular intervals over time within normal range for a human user, possibly even for the specific user, then the input is

likely to correspond to a real live pulse. A distance between the measure pulse signal and an expected pulse signal may be determined to assess the likelihood that the subject is a live eye rather than a spoof attack.

In some implementations, the expected motion parameters are specific to a particular user and are determined during an enrollment session and stored as part of a reference record for the particular user. In some implementations, the expected motion parameters are determined for a population based on a large collection of user data or offline studies.

For example, a behavioral metric may be determined **712** by an authentication module or application (e.g., authentication module **440**).

In this example, a spatial metric is determined **714** based on a distance from a sensor to a landmark that appears in a plurality of the images each having a different respective focus distance. Focus distance is the distance from a sensor to a point in its field of view that is perfectly in focus. For some sensors, the focus distance may be adjusted for different images by adjusting a focus configuration setting for the sensor. For example, a landmark (e.g., an iris, an eye corner, a nose, an ear, or a background object) may be identified and located in the plurality of images with different focus distances. A landmark's representation in a particular image has a degree of focus that depends on how far the object corresponding to the landmark is from an in focus point in the field of view of the sensor. Degree of focus is a measure of the extent to the image of the landmark is blurred by optical effects in the light sensor (e.g., due to diffraction and convolution with the aperture shape). The degree of focus for a landmark in a particular image may be estimated by determining the high frequency components of the image signal in the vicinity of the landmark. When the landmark is in focus, more high frequency components in its vicinity are expected. When the degree of focus is low for a landmark, smaller high frequency components are expected. By comparing the degree of focus for a landmark in images with different focus distances, the distance from the sensor to the landmark may be estimated. In some implementations, distances from the sensor (e.g. a camera) for multiple landmarks are estimated to form a topological map (consisting of a set of three-dimensional landmark positions) of the subject in the view of the sensor. The positions of these landmarks in the space viewed by the camera may be compared to a model by determining a spatial metric (e.g., the mean square difference between the detected location of one or more landmarks and the corresponding modeled locations of the one or more landmarks) that reflects deviation from the model.

In some implementations, the spatial metric is a measure of the deviation of the subject from a two-dimensional plane. One possible spoofing strategy is to present a two dimensional image (e.g., a photograph) of a registered user's eye to the sensor. However the locations of landmarks (e.g., an eye, nose, mouth, and ear) in the two dimensional image will occur in a two dimensional plane, unlike landmarks in and around a real live eye. For example, the locations of multiple landmarks may be fit to the closest two dimensional plane and the average distance of the landmarks from this fit plane can be determined as the spatial metric. A high value for this spatial metric may indicate a three-dimensional subject and a higher likelihood that the subject is a live eye, while a low value may indicate a higher likelihood that the subject is a two-dimensional spoof attack.

In some implementations, the spatial metric is a measure of the deviation of the subject from an expected three-dimensional shape. A three-dimensional model including locations of landmarks corresponding to an expected shape for a subject including the live eye of a user may be used for comparison to the detected landmark locations. In some implementations, the relative positions of landmarks on a particular user's face may be determined during an enrollment session and used generate a three-dimensional model that is stored as part of a reference record. In some implementations, three-dimensional model for a population of users may be determined based on an aggregation of measurements or studies of a large number of people. Various types of metrics can be used as a spatial metric to compare the detected landmark positions to the expected shape (e.g., a Euclidian distance, a correlation coefficient, modified Hausdorff distance, Mahalanobis distance, Bregman divergence, Kullback-Leibler distance, and Jensen-Shannon divergence).

In some implementations, determining **714** the spatial metric comprises determining parallax of two or more landmarks that appear in a plurality of the images. Parallax is the apparent displacement of an observed object due to a change in the position of the observer. A plurality of images taken from different perspectives on the subject may result in landmarks within the images appearing to move by different amounts because of differences in their distance from the sensor. This parallax effect may be measured and used as a spatial metric that reflects the three-dimensional nature of a subject in the view of the sensor. If all the landmarks in the images undergo the same apparent displacement due to relative motion of the sensor, i.e., the difference in the parallax effect for the landmarks is small, then the subject viewed by the camera has higher likelihood of being a two-dimensional spoof attack. In some implementations, the sensor is moved about the subject during image capture to collect image data from different orientations relative to the subject. For example, a single camera may be rotated or slid slightly or multiple cameras at different positions may be used for image capture. In some implementations, a user is prompted to move in order to change the relative orientation of the subject and the sensor. In some implementations, it is assumed that sensor will naturally move relative to the subject. For example, where the sensor is a camera in hand-held user device (e.g. a smartphone or tablet) the sensor may naturally move relative to the users face due to involuntary haptic motion.

For example, a spatial metric may be determined **714** by an authentication module or application (e.g., authentication module **440**).

In this example, a reflectance metric is determined **716** based on detected change in surface glare or specular reflection patterns on a surface of the eye as the eye appears in a plurality of the images. The reflectance metric may be a measure of changes in glare or specular reflection patches on the surface of the eye. As the illumination of an eye in the view of the sensor changes, due to relative motion of the eye and a light source or to changes in a dynamic light source (e.g., a flash, LCD screen, or other illumination element), the glare and specular reflection patterns visible on the eye are expected to change by appearing, disappearing, growing, shrinking, or moving. In some implementations, changes in the illumination are induced during image capture by photic stimuli (e.g. a flash pulse) or external stimuli (e.g. a prompt instructing a user to change gaze direction). For example, glare, including its boundaries, can be detected by thresholding a contrast enhanced image to find the whitest spots. Detected changes in the glare or specular reflection patterns on the eye in the images may be compared to expected

changes in the these patterns by determining **716** a reflectance metric that measures the deviation of the detected change from an expected change.

We are looking for changes in the area and shape of this glare. One can also look at the ratio of circumference to area of the glare patch.

In some implementations, a flash may be pulsed to illuminate the subject while one or more of the images are being captured. Glare from the flash may be detected on the eye as it appears in the images. The pulsing of the flash may be synchronized with image capture so that the time difference between when the flash is pulsed and when the corresponding glare appears in the images can be measured. The reflectance metric may be based on this time difference. Large deviations from the expected synchronization or time-lock of the flash pulse and the onset of a corresponding glare or specular reflection may indicate a spoof attack. For example, a replay attack uses pre-recorded video of a capturing scenario. Glare changes in the pre-recorded video are unlikely to be time-locked to a real-time flash event during the current session. Another example is presenting a printed image of an eye to the sensor, in which case glare may spread across the printed image in an unnaturally uniform manner or may not change perceivably due to a lack of moisture on the viewed surface. If no corresponding glare or specular reflection is detected, the reflectance metric may be determined to be a large arbitrary number corresponding to poor synchronization or a lack of time-lock between the flash and detected glare or specular reflection.

In some implementations, changes in illumination may be detected as changes as changes in the uniformity of a glare pattern caused by greater amounts of fine three-dimensional texture of a white of the eye being revealed as the intensity of the illumination is increased. For example, a flash may be pulsed to illuminate the subject at higher intensity while one or more of the images are being captured. Fine three-dimensional texture of a white of the eye may be detected by measuring uniformity of a pattern of glare on the eye in the images before and after the onset of the flash pulse. For example, the uniformity of the glare of specular reflection pattern may be measured as the ratio of circumference to the area of the glare. The larger this number compared to 2/R, the more non-circular and non-uniform the glare (R is the estimated radius of the glare patch). In some implementations, a function approximator (e.g., a neural network) is trained to distinguish between specular reflection patterns recorded from live eyeballs vs. synthesized eyeballs, such as 3D printed eyeballs, using a sensor with an illumination element (e.g., a flash).

For example, a reflectance metric may be determined **716** by an authentication module or application (e.g., authentication module **440**).

In some implementations (not shown), additional liveness metrics may be determined **710**. For example, a metric reflecting the extent of saccadic motion of the eye in the view of the sensor may be determined. An iris of the eye may be landmarked in a sequence of images so that its position or orientation may be tracked. This sequence of positions or orientations may be analyzed to determine extent of saccadic motion, by filtering for motions at a particular frequency associated with normal saccadic motion.

In some implementations, a liveness metric may be determined **710** that reflects the extent of halftones in a captured image. Halftones are artifacts of digital printed images that may be used in a spoof attack and thus their presence may indicate a high likelihood of a spoof attack. For example, one or more images may be captured using a reduced dynamic range for the sensor (e.g., a camera) so that a finer resolution in intensity of detected light is achieved in a range within which it occurs in the captured images. In this manner, the intensity or color scale can be zoomed in to reveal more subtle changes in the level of the detected image signal. If the captured images are of a live eye, it is expected that the range of color or intensity values detected will continue to vary continuously. In contrast, a spoofed image (e.g. a digital photograph presented to the sensor) may exhibit large discontinuous jumps corresponding to halftones. The extent of halftones in the image may be measured in a variety of ways (e.g., as average or maximum eigenvalues of a Hessian matrix evaluated in a region of the image or as high frequency components of the image signal). In some implementations, images with a halftone metric above a threshold are rejected. In some implementations, histograms of gray shades in the image are generated and the uniformity of the distribution between grey level bins (e.g., 256 bins) is measured.

In some implementations, the liveness metrics are determined **710** in parallel. In some implementations, the liveness metrics are determined **710** in series.

The liveness score may then be determined **730** based on the one or more liveness metrics. In some implementations, the liveness score is determined by inputting the one or more liveness metrics to a trained function approximator.

The function approximator may be trained using data corresponding to training images of live eyes and various spoof attacks that have been correctly labeled to provide a desired output signal. The function approximator models the mapping from input data (i.e., the training image liveness metrics) to output data (i.e., a liveness score) with a set of model parameters. The model parameter values are selected using a training algorithm that is applied to the training data. For example, the function approximator may be based the following models: linear regression, Volterra series, Wiener series, radial basis functions, kernel methods, polynomial methods; piecewise linear models, Bayesian classifiers, k-nearest neighbor classifiers, neural networks, support vector machines, or fuzzy function approximator. In some implementations, the liveness score may be binary.

For example, the liveness score may be determined **730** based on one or more liveness metrics by an authentication module or application (e.g., authentication module **440**).

The resulting liveness score may then be returned **740** and may be used by an authentication system (e.g., authentication system **400**) in variety of ways. For example, the liveness score may be used to accept or reject the one or more images.

FIG. **8**A is a flow chart of an example process **800** for determining a behavioral metric based on constriction of a pupil in response to photic stimulus. One or more photic stimuli are applied **810** to the scene viewed by a sensor (e.g. light sensor **420**). For example, the photic stimuli may include a flash pulse or a change in the brightness of a display (e.g., an LCD display). A sequence of images is captured **812** by the sensor before and after the start of the photic stimuli. For example, the sequence of images may be captured at regularly spaced times (e.g., at 10, 30, or 60 Hz) in an interval (e.g., 2, 5, or 10 seconds) that includes the start of the photic stimuli.

In some implementations, a pupil is landmarked in each of the captured images and the diameter of the pupil is determined **814** in each captured image. The diameter may be determined **814** relative to a starting diameter for the pupil that is measured in one or more images captured before the start of the photic stimuli.

The resulting sequence of pupil diameters measured in response to the photic stimuli may be analyzed to determine **816** one or more motion parameters for the constriction of the pupil in response to the photic stimuli. In some implementations, motion parameters of the pupil constriction may include an onset time of the constriction motion relative to the start of the photic stimuli. Onset is the time delay between the start of the photic stimuli and the start of the constriction motion. In some implementations, motion parameters of the pupil constriction may include a duration of the constriction motion. Duration is the length of time between the start of the constriction motion and the end of the constriction motion, when the pupil diameter reaches a new steady state value (e.g., after which the diameter does not change for a minimum interval of time). In some implementations, motion parameters of the pupil constriction may include a velocity of pupil constriction. For example, the velocity may be determined as difference in pupil diameters between two points in time divided by the length of the time interval between them. In some implementations, motion parameters of the pupil constriction may include an acceleration of the pupil constriction in different time segments of constriction period. For example, the acceleration may be determined as a difference in velocities between two intervals.

The behavioral metric may be determined **818** as a distance between one or more determined motion parameters and one or more expected motion parameters. For example, the behavior metric may include a difference between a detected onset time and an expected onset time for a live eye. For example, the behavior metric may include a difference between a detected duration and an expected duration of pupil constriction for a live eye. In some implementations, a sequence of pupil diameters is compared to an expected sequence of pupil diameters by determining a distance (e.g., a Euclidian distance, a correlation coefficient, modified Hausdorff distance, Mahalanobis distance, Bregman divergence, Kullback-Leibler distance, and Jensen-Shannon divergence) between the two sequences. In some implementations, a sequence of pupil constriction velocities for the constriction motion is compared to an expected sequence of pupil constriction velocities by determining a distance between the two sequences of velocities. In some implementations, a sequence of pupil constriction accelerations for the constriction motion is compared to an expected sequence of pupil constriction accelerations by determining a distance between the two sequences of accelerations.

For example, the process **800** may be implemented by an authentication module or application (e.g., authentication module **440**) controlling a light sensor (e.g. light sensor **420**) and an illumination element.

FIG. **8**B is a flow chart of an example process **820** for determining a behavioral metric based on gaze transition of an iris in response to external stimulus. One or more external stimuli are applied **830** to a user viewed by a sensor (e.g. light sensor **420**). For example, the external stimuli may include prompts instructing a user to direct their gaze (e.g., look right, left, up, down, or straight ahead) during image capture. Prompts may be visual, auditory, and/or tactile. In some implementations, the external stimuli can include an object that moves within in display for user's eyes to follow.

A sequence of images is captured **832** by the sensor before and after the start of the external stimuli. For example, the sequence of images may be captured at regularly spaced times (e.g., at 10, 30, or 60 Hz) in an interval (e.g., 2, 5, or 10 seconds) that includes the start of the external stimuli.

In some implementations, an iris is landmarked in each of the captured images and the position or orientation of the iris is determined **834** in each captured image. The position may be determined **834** relative to a starting position for the iris that is measured in one or more images captured before the start of the external stimuli.

The resulting sequence of iris positions measured in response to the external stimuli may be analyzed to determine **836** one or more motion parameters for the gaze transition in response to the external stimuli. In some implementations, motion parameters of the gaze transition may include an onset time of the gaze transition motion relative to the start of the external stimuli. Onset is the time delay between the start of the external stimuli and the start of the gaze transition motion. In some implementations, motion parameters of the gaze transition may include a duration of the gaze transition motion. Duration is the length of time between the start of the gaze transition motion and the end of the gaze transition motion, when the iris reaches a new steady state position (e.g., after which the iris does not move for a minimum interval of time). In some implementations, motion parameters of the gaze transition may include a velocity of gaze transition. For example, the velocity may be determined as difference in iris positions between two points in time divided by the length of the time interval between them. In some implementations, motion parameters of the gaze transition may include an acceleration of the gaze transition. For example, the acceleration may be determined as a difference in velocities between two intervals.

The behavioral metric may be determined **838** as a distance between one or more determined motion parameters and one or more expected motion parameters. For example, the behavior metric may include a difference between a detected onset time and an expected onset time for a live eye. For example, the behavior metric may include a difference between a detected duration and an expected duration of pupil constriction for a live eye. In some implementations, a sequence of iris positions is compared to expected sequence of iris positions by determining a distance (e.g., a Euclidian distance, a correlation coefficient, modified Hausdorff distance, Mahalanobis distance, Bregman divergence, Kullback-Leibler distance, and Jensen-Shannon divergence) between the two sequences. In some implementations, a sequence of transition velocities for the gaze transition motion is compared to expected sequence of transition velocities by determining a distance between the two sequences of velocities. In some implementations, a sequence of gaze transition accelerations for the constriction motion is compared to an expected sequence of gaze transition accelerations by determining a distance between the two sequences of accelerations.

For example, the process **820** may be implemented by an authentication module or application (e.g., authentication module **440**) controlling a light sensor (e.g. light sensor **420**) and a prompting device (e.g., a display, a speaker, or a haptic feedback device).

FIG. **9** shows an example of a generic computer device **900** and a generic mobile computing device **950**, which may be used with the techniques described here. Computing device **900** is intended to represent various forms of digital computers, such as laptops, desktops, workstations, personal digital assistants, servers, blade servers, mainframes, and other appropriate computers. Computing device **950** is intended to represent various forms of mobile devices, such as personal digital assistants, cellular telephones, smartphones, and other similar computing devices. The compo-

nents shown here, their connections and relationships, and their functions, are meant to be exemplary only, and are not meant to limit implementations of the inventions described and/or claimed in this document.

Computing device **900** includes a processor **902**, memory **904**, a storage device **906**, a high-speed interface **908** connecting to memory **904** and high-speed expansion ports **910**, and a low speed interface **912** connecting to low speed bus **914** and storage device **906**. Each of the components **902**, **904**, **906**, **908**, **910**, and **912**, are interconnected using various busses, and may be mounted on a common motherboard or in other manners as appropriate. The processor **902** can process instructions for execution within the computing device **900**, including instructions stored in the memory **904** or on the storage device **906** to display graphical information for a GUI on an external input/output device, such as display **916** coupled to high speed interface **908**. In other implementations, multiple processors and/or multiple buses may be used, as appropriate, along with multiple memories and types of memory. Also, multiple computing devices **900** may be connected, with each device providing portions of the necessary operations (e.g., as a server bank, a group of blade servers, or a multi-processor system).

The memory **904** stores information within the computing device **900**. In one implementation, the memory **904** is a volatile memory unit or units. In another implementation, the memory **904** is a non-volatile memory unit or units. The memory **904** may also be another form of computer-readable medium, such as a magnetic or optical disk.

The storage device **906** is capable of providing mass storage for the computing device **900**. In one implementation, the storage device **906** may be or contain a computer-readable medium, such as a floppy disk device, a hard disk device, an optical disk device, or a tape device, a flash memory or other similar solid state memory device, or an array of devices, including devices in a storage area network or other configurations. A computer program product can be tangibly embodied in an information carrier. The computer program product may also contain instructions that, when executed, perform one or more methods, such as those described above. The information carrier is a computer- or machine-readable medium, such as the memory **904**, the storage device **906**, or a memory on processor **902**, for example.

The high speed controller **908** manages bandwidth-intensive operations for the computing device **900**, while the low speed controller **912** manages lower bandwidth-intensive operations. Such allocation of functions is exemplary only. In one implementation, the high-speed controller **908** is coupled to memory **904**, display **916** (e.g., through a graphics processor or accelerator), and to high-speed expansion ports **910**, which may accept various expansion cards (not shown). In the implementation, low-speed controller **912** is coupled to storage device **906** and low-speed expansion port **914**. The low-speed expansion port, which may include various communication ports (e.g., USB, Bluetooth, Ethernet, wireless Ethernet) may be coupled to one or more input/output devices, such as a keyboard, a pointing device, a scanner, or a networking device such as a switch or router, e.g., through a network adapter.

The computing device **900** may be implemented in a number of different forms, as shown in the figure. For example, it may be implemented as a standard server **920**, or multiple times in a group of such servers. It may also be implemented as part of a rack server system **924**. In addition, it may be implemented in a personal computer such as a laptop computer **922**. Alternatively, components from computing device **900** may be combined with other components in a mobile device (not shown), such as device **950**. Each of such devices may contain one or more of computing device **900**, **950**, and an entire system may be made up of multiple computing devices **900**, **950** communicating with each other.

Computing device **950** includes a processor **952**, memory **964**, an input/output device such as a display **954**, a communication interface **966**, and a transceiver **968**, among other components. The device **950** may also be provided with a storage device, such as a microdrive or other device, to provide additional storage. Each of the components **950**, **952**, **964**, **954**, **966**, and **968**, are interconnected using various buses, and several of the components may be mounted on a common motherboard or in other manners as appropriate.

The processor **952** can execute instructions within the computing device **950**, including instructions stored in the memory **964**. The processor may be implemented as a chipset of chips that include separate and multiple analog and digital processors. The processor may provide, for example, for coordination of the other components of the device **950**, such as control of user interfaces, applications run by device **950**, and wireless communication by device **950**.

Processor **952** may communicate with a user through control interface **958** and display interface **956** coupled to a display **954**. The display **954** may be, for example, a TFT LCD (Thin-Film-Transistor Liquid Crystal Display) or an OLED (Organic Light Emitting Diode) display, or other appropriate display technology. The display interface **956** may comprise appropriate circuitry for driving the display **954** to present graphical and other information to a user. The control interface **958** may receive commands from a user and convert them for submission to the processor **952**. In addition, an external interface **962** may be provided in communication with processor **952**, so as to enable near area communication of device **950** with other devices. External interface **962** may provide, for example, for wired communication in some implementations, or for wireless communication in other implementations, and multiple interfaces may also be used.

The memory **964** stores information within the computing device **950**. The memory **964** can be implemented as one or more of a computer-readable medium or media, a volatile memory unit or units, or a non-volatile memory unit or units. Expansion memory **974** may also be provided and connected to device **950** through expansion interface **972**, which may include, for example, a SIMM (Single In Line Memory Module) card interface. Such expansion memory **974** may provide extra storage space for device **950**, or may also store applications or other information for device **950**. Specifically, expansion memory **974** may include instructions to carry out or supplement the processes described above, and may include secure information also. Thus, for example, expansion memory **974** may be provided as a security module for device **950**, and may be programmed with instructions that permit secure use of device **950**. In addition, secure applications may be provided via the SIMM cards, along with additional information, such as placing identifying information on the SIMM card in a non-hackable manner.

The memory may include, for example, flash memory and/or NVRAM memory, as discussed below. In one implementation, a computer program product is tangibly embodied in an information carrier. The computer program product contains instructions that, when executed, perform one or

more methods, such as those described above. The information carrier is a computer- or machine-readable medium, such as the memory **964**, expansion memory **974**, memory on processor **952**, or a propagated signal that may be received, for example, over transceiver **968** or external interface **962**.

Device **950** may communicate wirelessly through communication interface **966**, which may include digital signal processing circuitry where necessary. Communication interface **966** may provide for communications under various modes or protocols, such as GSM voice calls, SMS, EMS, or MMS messaging, CDMA, TDMA, PDC, WCDMA, CDMA2000, or GPRS, among others. Such communication may occur, for example, through radio-frequency transceiver **968**. In addition, short-range communication may occur, such as using a Bluetooth, WiFi, or other such transceiver (not shown). In addition, GPS (Global Positioning System) receiver module **970** may provide additional navigation- and location-related wireless data to device **950**, which may be used as appropriate by applications running on device **950**.

Device **950** may also communicate audibly using audio codec **960**, which may receive spoken information from a user and convert it to usable digital information. Audio codec **960** may likewise generate audible sound for a user, such as through a speaker, e.g., in a handset of device **950**. Such sound may include sound from voice telephone calls, may include recorded sound (e.g., voice messages, music files, etc.) and may also include sound generated by applications operating on device **950**.

The computing device **950** may be implemented in a number of different forms, as shown in the figure. For example, it may be implemented as a cellular telephone **980**. It may also be implemented as part of a smartphone **982**, personal digital assistant, or other similar mobile device.

Various implementations of the systems and techniques described here can be realized in digital electronic circuitry, integrated circuitry, specially designed ASICs (application specific integrated circuits), computer hardware, firmware, software, and/or combinations thereof. These various implementations can include implementation in one or more computer programs that are executable and/or interpretable on a programmable system including at least one programmable processor, which may be special or general purpose, coupled to receive data and instructions from, and to transmit data and instructions to, a storage system, at least one input device, and at least one output device.

These computer programs (also known as programs, software, software applications or code) include machine instructions for a programmable processor, and can be implemented in a high-level procedural and/or object-oriented programming language, and/or in assembly/machine language. As used herein, the terms "machine-readable medium" and "computer-readable medium" refer to any computer program product, apparatus and/or device (e.g., magnetic discs, optical disks, memory, Programmable Logic Devices (PLDs)) used to provide machine instructions and/or data to a programmable processor, including a machine-readable medium that receives machine instructions as a machine-readable signal. The term "machine-readable signal" refers to any signal used to provide machine instructions and/or data to a programmable processor.

To provide for interaction with a user, the systems and techniques described here can be implemented on a computer having a display device (e.g., a CRT (cathode ray tube) or LCD (liquid crystal display) monitor) for displaying information to the user and a keyboard and a pointing device (e.g., a mouse or a trackball) by which the user can provide input to the computer. Other kinds of devices can be used to provide for interaction with a user as well; for example, feedback provided to the user can be any form of sensory feedback (e.g., visual feedback, auditory feedback, or tactile feedback); and input from the user can be received in any form, including acoustic, speech, or tactile input.

The systems and techniques described here can be implemented in a computing system that includes a back end component (e.g., as a data server), or that includes a middleware component (e.g., an application server), or that includes a front end component (e.g., a client computer having a graphical user interface or a Web browser through which a user can interact with an implementation of the systems and techniques described here), or any combination of such back end, middleware, or front end components. The components of the system can be interconnected by any form or medium of digital data communication (e.g., a communication network). Examples of communication networks include a local area network ("LAN"), a wide area network ("WAN"), and the Internet.

The computing system can include clients and servers. A client and server are generally remote from each other and typically interact through a communication network. The relationship of client and server arises by virtue of computer programs running on the respective computers and having a client-server relationship to each other.

A number of embodiments have been described. Nevertheless, it will be understood that various modifications may be made without departing from the spirit and scope of the invention.

In addition, the logic flows depicted in the figures do not require the particular order shown, or sequential order, to achieve desirable results. In addition, other steps may be provided, or steps may be eliminated, from the described flows, and other components may be added to, or removed from, the described systems. Accordingly, other embodiments are within the scope of the following claims.

What is claimed is:

1. A computer-implemented method comprising:

capturing, using a light sensor, a plurality of images of a subject including a view of an eye of the subject;

determining a reflectance metric by at least one of:

measuring a time difference between (i) an occurrence of a flash pulse captured by one or more of the images and (ii) an appearance of a corresponding glare detected on the eye in one or more of the images; and

measuring uniformity of a pattern of glare on an outer surface of the eye visible in one or more of the images caused by one or more flash pulses captured by one or more of the images, wherein the uniformity of a pattern of glare on the eye is measured as a ratio of circumference to an area of the glare; and

rejecting or accepting the images based on, at least, the reflectance metric.

2. The method of claim **1**, further comprising changing one or more parameters at different times during the capturing of the images.

3. The method of claim **2**, wherein a particular parameter comprises a flash pulse, a focus setting of the light sensor, brightness of a display, exposure of the light sensor, white balance of the light sensor, an illumination of the subject, or external stimuli.

4. The method of claim **1**, wherein measuring the time difference comprises synchronizing the flash pulse with the capturing of one or more of the images.

5. The method of claim 1, further comprising:

determining a spatial metric based on, at least, a distance from the light sensor to a landmark that appears in a plurality of the images each having a different respective focus distance,

wherein the rejecting or accepting the images is further based on the spatial metric.

6. The method of claim 5, wherein the spatial metric is a measure of deviation of the subject from an expected three-dimensional shape.

7. The method of claim 5, wherein determining the spatial metric comprises determining parallax of two or more landmarks that appear in a plurality of the images.

8. The method of claim 1, further comprising:

determining a behavioral metric based on, at least, detected movement of the eye as the eye appears in a plurality of the images, wherein the behavioral metric is a measure of deviation of detected movement and timing from expected movement of the eye,

wherein the rejecting or accepting the images is further based on the spatial metric.

9. The method of claim 8, wherein determining the behavioral metric comprises determining an onset, duration, velocity, or acceleration of pupil constriction in response to photic stimuli.

10. The method of claim 8, wherein determining the behavioral metric comprises determining an onset, duration, or acceleration of gaze transition in response to external stimuli.

11. The method of claim 8, wherein determining the behavioral metric comprises detecting blood flow of the eye as the eye appears in a plurality of the images.

12. A system comprising data processing apparatus programmed to perform operations comprising:

capturing, using a light sensor, a plurality of images of a subject including a view of an eye of the subject;

determining a reflectance metric by at least one of:

measuring a time difference between (i) an occurrence of a flash pulse captured by one or more of the images and (ii) an appearance of a corresponding glare detected on the eye in one or more of the images; and

measuring uniformity of a pattern of glare on an outer surface of the eye visible in one or more of the images caused by one or more flash pulses captured by one or more of the images, wherein the uniformity of a pattern of glare on the eye is measured as a ratio of circumference to an area of the glare; and

rejecting or accepting the images based on, at least, the reflectance metric.

13. The system of claim 12, wherein the operations further comprise changing one or more parameters at different times during the capturing of the images.

14. The system of claim 13, wherein a particular parameter comprises a flash pulse, a focus setting of the light sensor, brightness of a display, exposure of the light sensor, white balance of the light sensor, an illumination of the subject, or external stimuli.

15. The system of claim 12, wherein measuring the time difference comprises synchronizing the flash pulse with the capturing of one or more of the images.

16. The system of claim 12, wherein the operations further comprise:

determining a spatial metric based on, at least, a distance from the light sensor to a landmark that appears in a plurality of the images each having a different respective focus distance,

wherein the rejecting or accepting the images is further based on the spatial metric.

17. The system of claim 16, wherein the spatial metric is a measure of deviation of the subject from an expected three-dimensional shape.

18. The system of claim 16, wherein determining the spatial metric comprises determining parallax of two or more landmarks that appear in a plurality of the images.

19. The system of claim 12, wherein the operations further comprise:

determining a behavioral metric based on, at least, detected movement of the eye as the eye appears in a plurality of the images, wherein the behavioral metric is a measure of deviation of detected movement and timing from expected movement of the eye,

wherein the rejecting or accepting the images is further based on the spatial metric.

20. The system of claim 19, wherein determining the behavioral metric comprises determining an onset, duration, velocity, or acceleration of pupil constriction in response to photic stimuli.

21. The system of claim 19, wherein determining the behavioral metric comprises determining an onset, duration, or acceleration of gaze transition in response to external stimuli.

22. The system of claim 19, wherein determining the behavioral metric comprises detecting blood flow of the eye as the eye appears in a plurality of the images.

23. A non-transitory computer storage medium encoded with instructions that, when executed by a data processing apparatus, cause the data processing apparatus to perform operations comprising:

capturing, using a light sensor, a plurality of images of a subject including a view of an eye of the subject;

determining a reflectance metric by at least one of:

measuring a time difference between (i) an occurrence of a flash pulse captured by one or more of the images and (ii) an appearance of a corresponding glare detected on the eye in one or more of the images; and

measuring uniformity of a pattern of glare on an outer surface of the eye visible in one or more of the images caused by one or more flash pulses captured by one or more of the images, wherein the uniformity of a pattern of glare on the eye is measured as a ratio of circumference to an area of the glare; and

rejecting or accepting the images based on, at least, the reflectance metric.

* * * * *