US 20180199730A1

(19) United States

(12) Patent Application Publication

Lundh

(10) Pub. No.: US 2018/0199730 A1

(43) Pub. Date: Jul. 19, 2018

(54) **BABY CARRIER**

(71) Applicant: **Joran Lundh**, Hong Kong (CN)

(72) Inventor: **Joran Lundh**, Hong Kong (CN)

(21) Appl. No.: **15/741,991**

(22) PCT Filed: **Jul. 15, 2016**

(86) PCT No.: **PCT/EP2016/066889**

§ 371 (c)(1),
(2) Date: **Jan. 4, 2018**

(30) **Foreign Application Priority Data**

Jul. 17, 2015 (SE) 1551028-2

Publication Classification

(51) **Int. Cl.**
A47D 13/02 (2006.01)

(52) **U.S. Cl.**
CPC *A47D 13/025* (2013.01); *A45F 2003/045* (2013.01)

(57) **ABSTRACT**

A baby carrier is provided which has a front portion (**101**), a stomach portion, two shoulder straps (**103***a*, **103***b*), each having a first and a second end portion, and a waist strap (**102**). The first end portion of each shoulder strap (**103***a*, **103***b*) is fixedly attached to the stomach portion and the second end portion is attached to the front portion (**101**). The front portion (**101**) and stomach portion are attached to the waist strap (**102**) in such a way that the stomach portion and front portion are at least partly detachable from the waist strap (**102**). This provides the baby carrier with support means for a child's legs when sitting in a forward position.

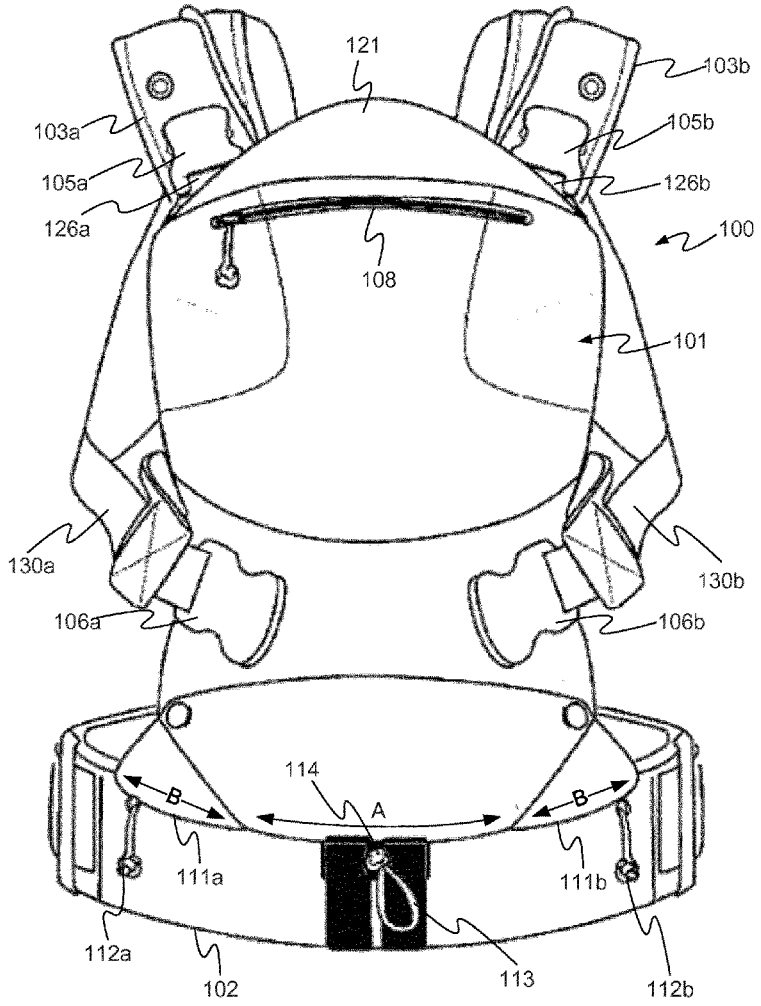

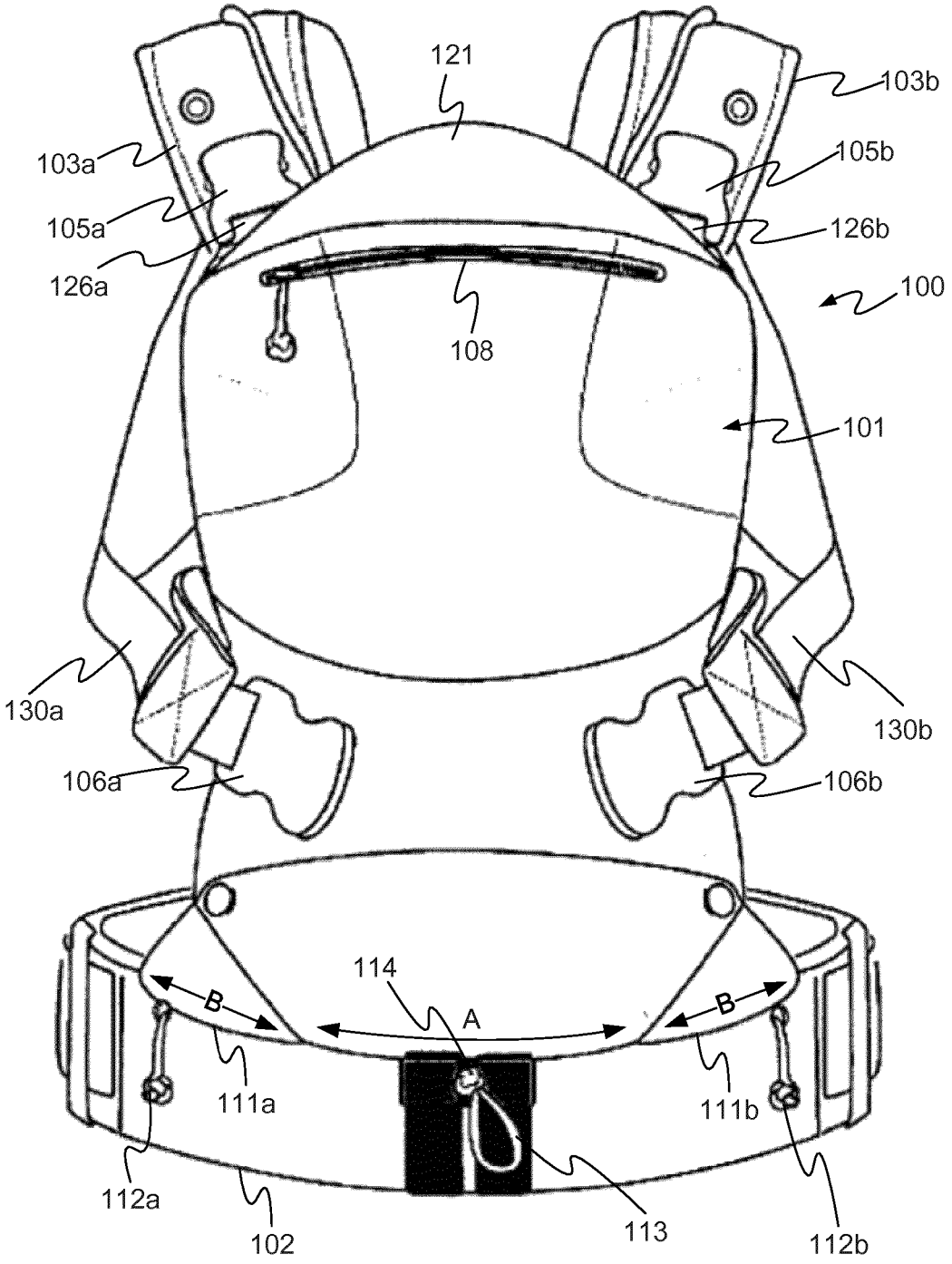
121
103b
103a
105b
105a
126b
126a
100
108
101
130a
130b
106a
106b
114
B
A
B
111a
111b
112a
102
113
112b

Fig. 1

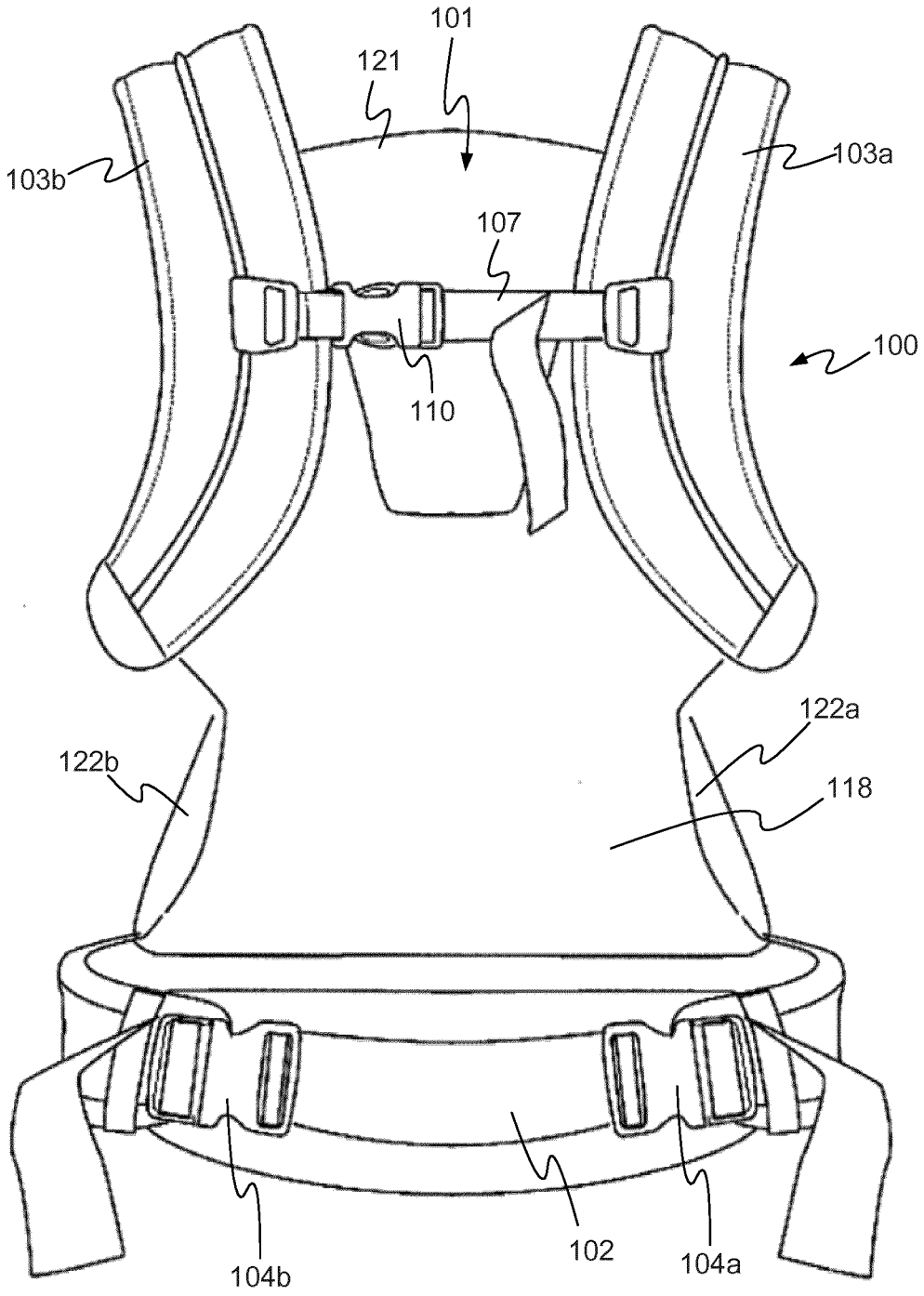

Fig. 2

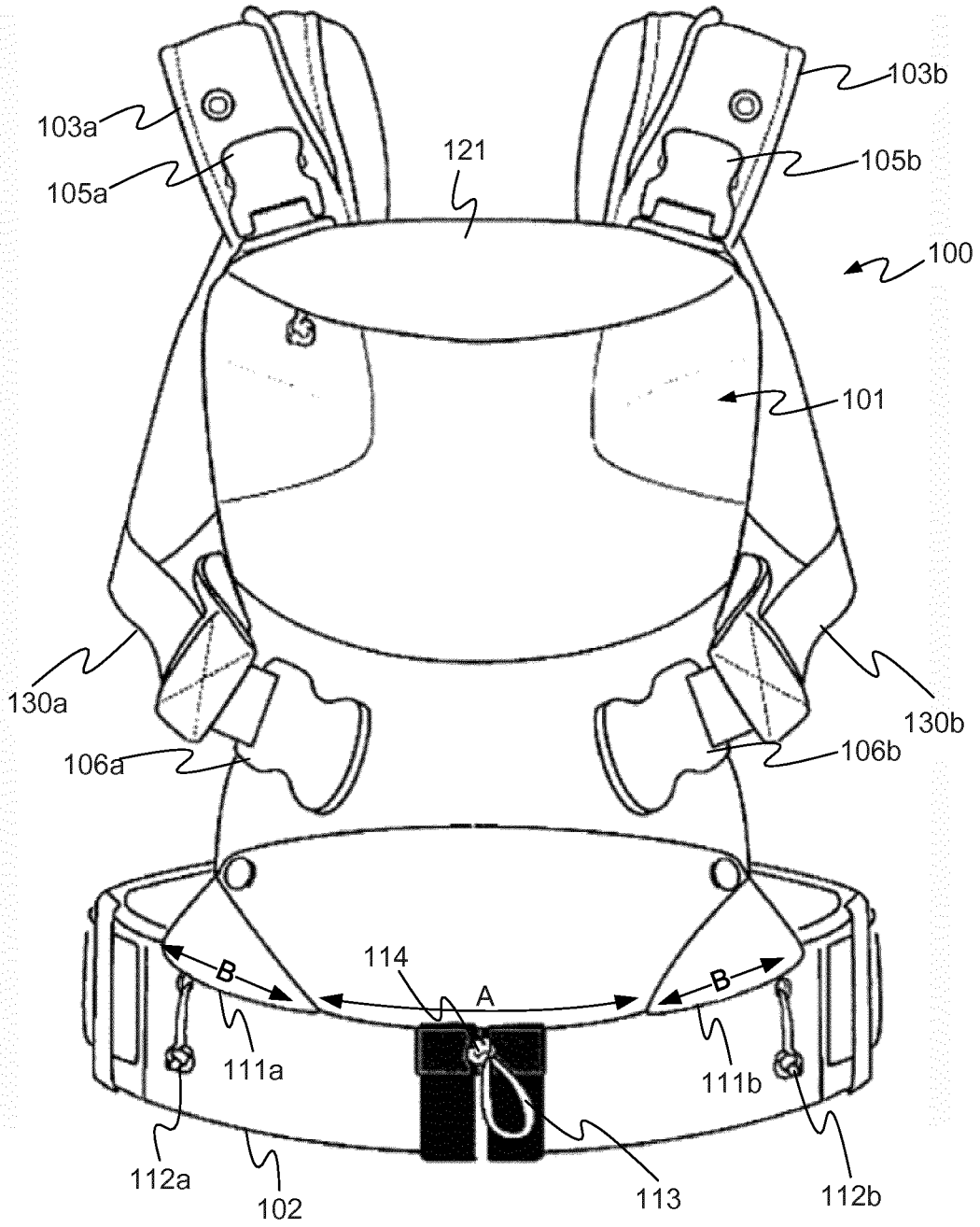
103a
105a
121
103b
105b
100
101
130a
130b
106a
106b
114
A
B
B
111a
111b
112a
102
113
112b

Fig. 3

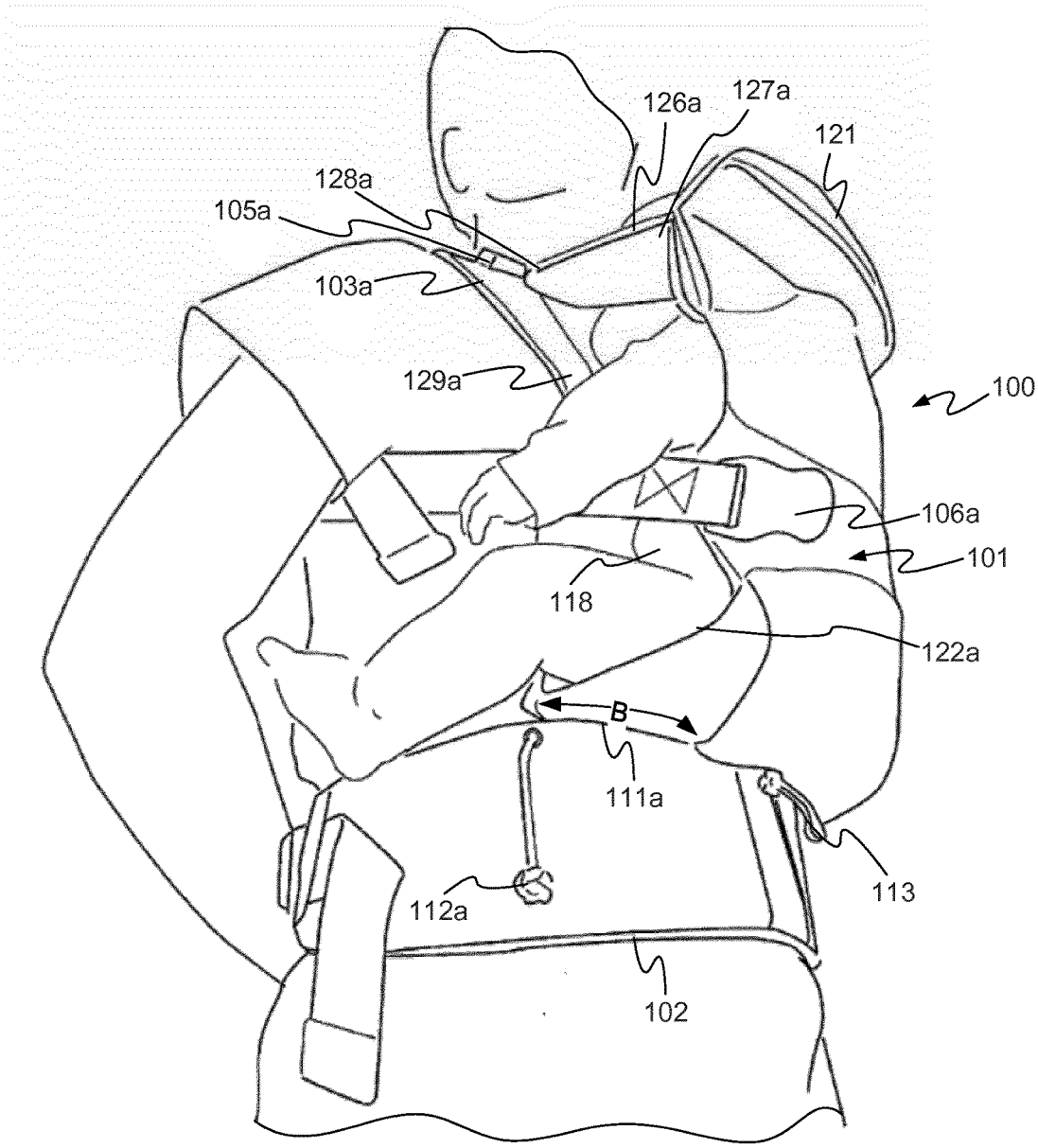
126a
127a
121
128a
105a
103a
129a
100
106a
101
118
122a
B
111a
113
112a
102

Fig. 4

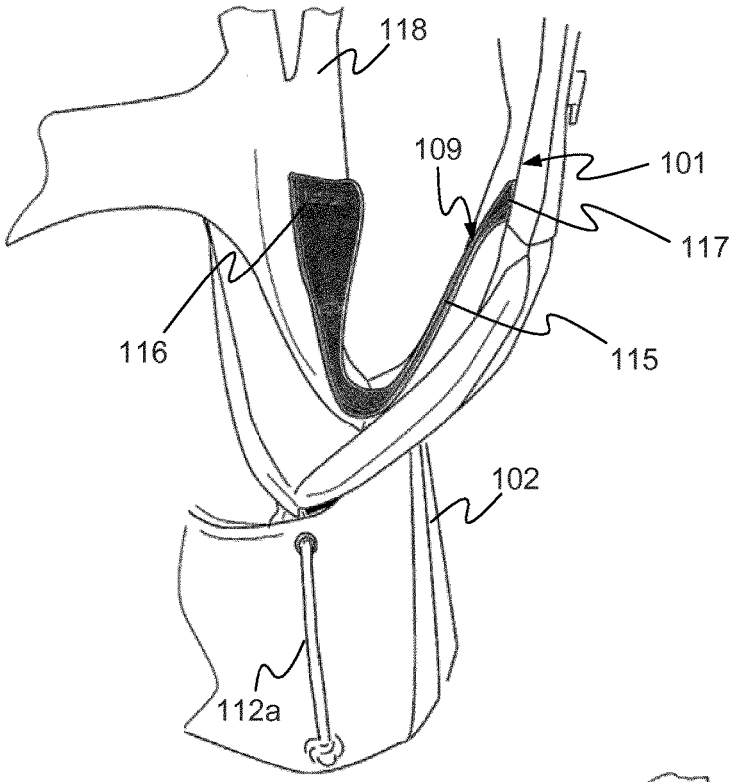
118
109
101
117
116
115
102
112a

Fig. 5

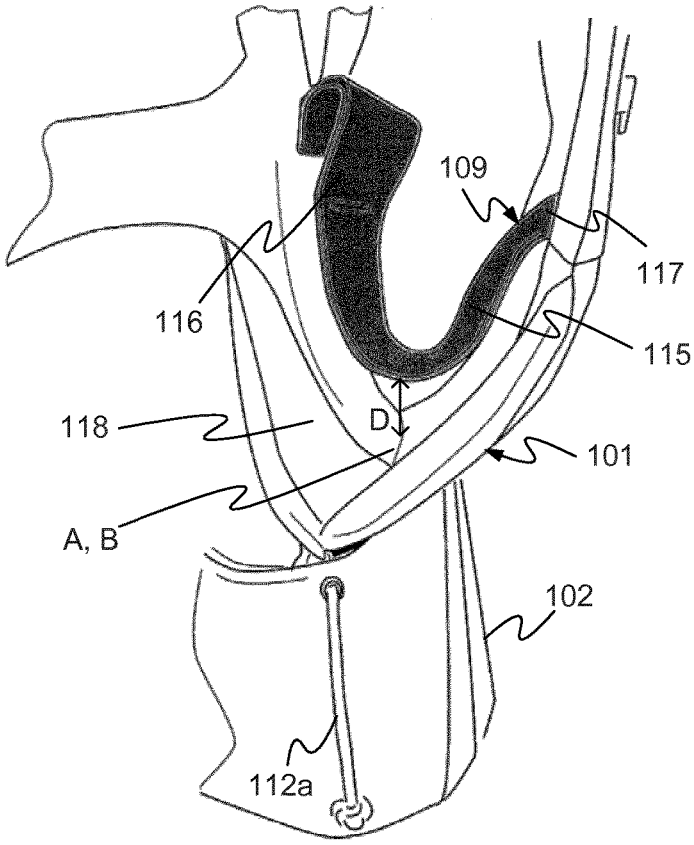
109
117
116
115
118
D
101
A, B
102
112a

Fig. 6

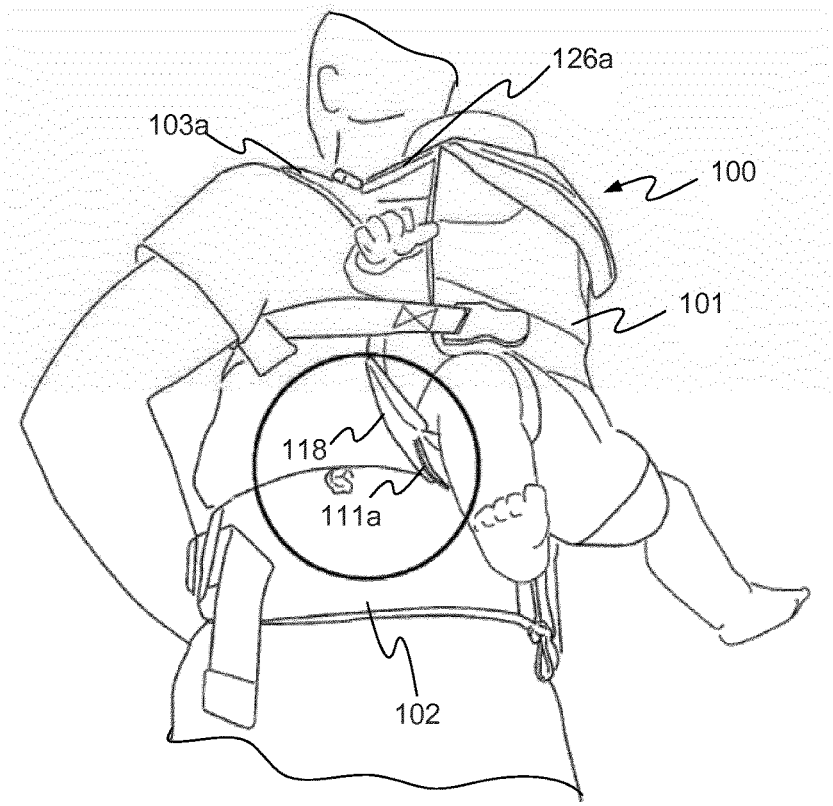

Fig. 8

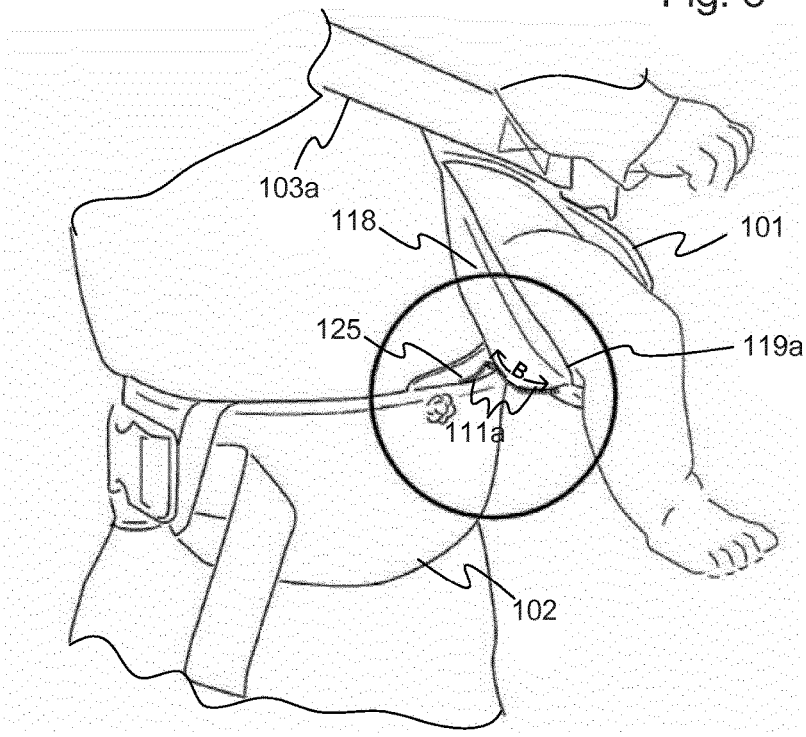

Fig. 9

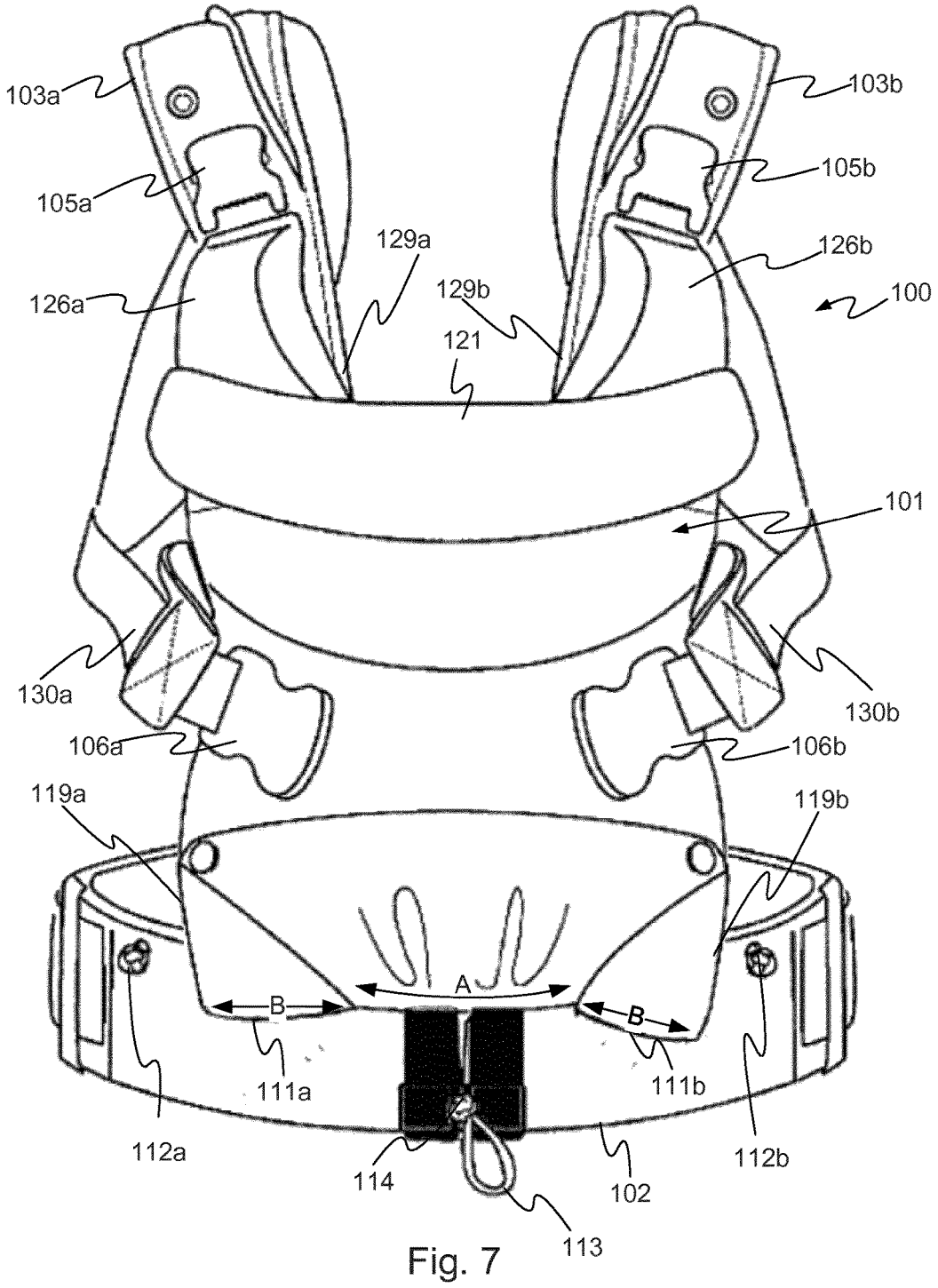
103a
103b
105a
105b
129a
126b
126a
129b
100
121
101
130a
130b
106a
106b
119a
119b
A
B
B
111a
111b
112a
112b
114
102
113

Fig. 7

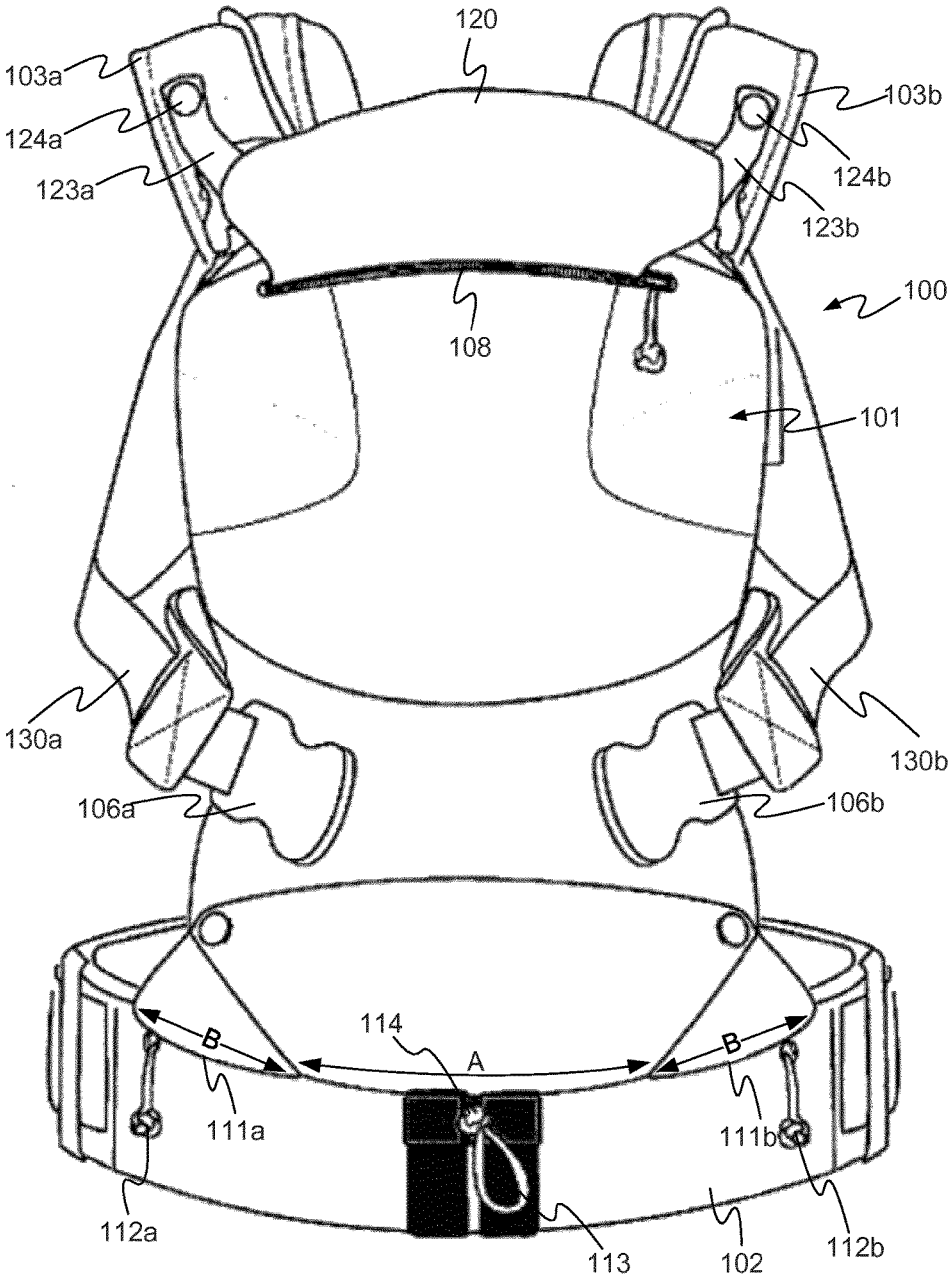
120
103a
103b
124a
124b
123a
123b
100
108
101
130a
130b
106a
106b
114
A
B
B
111a
111b
112a
112b
113
102

Fig. 10

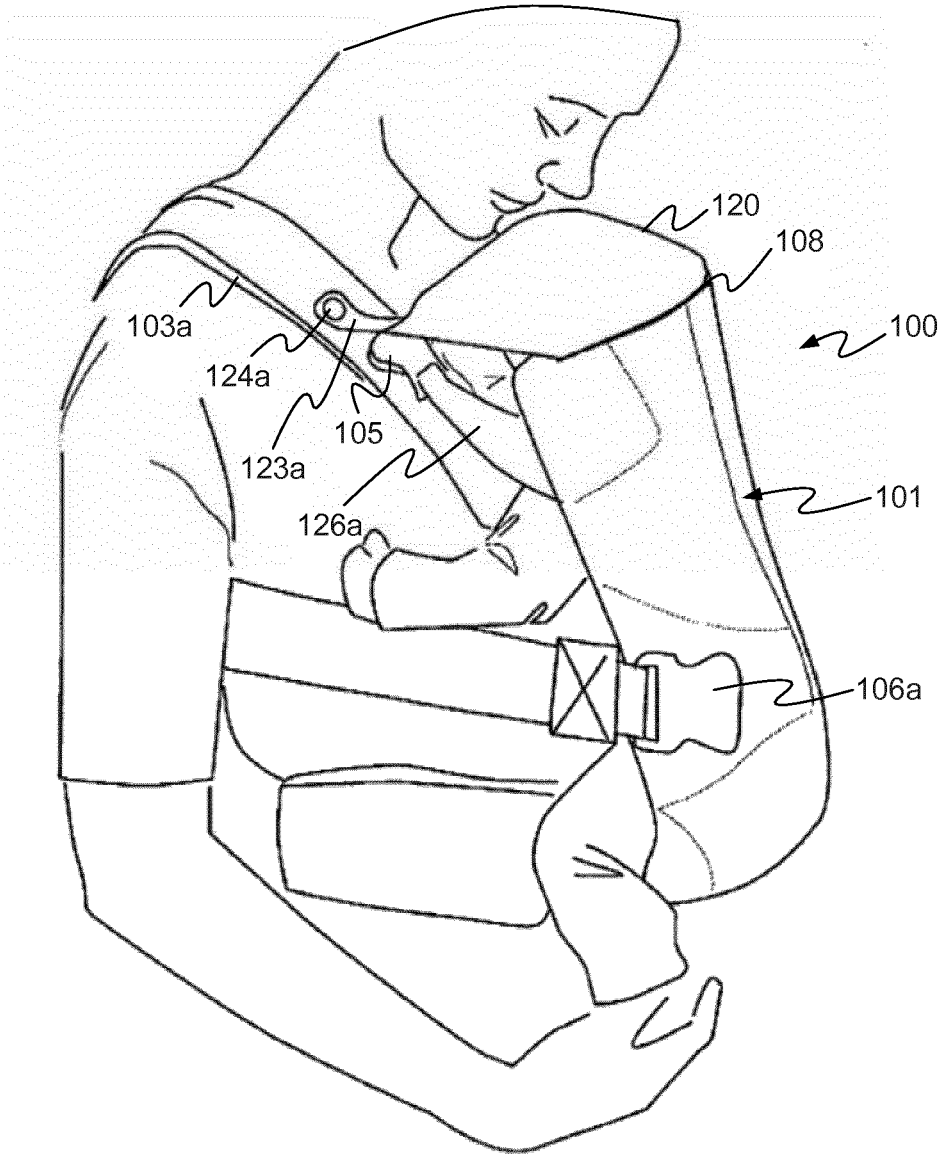

Fig. 11

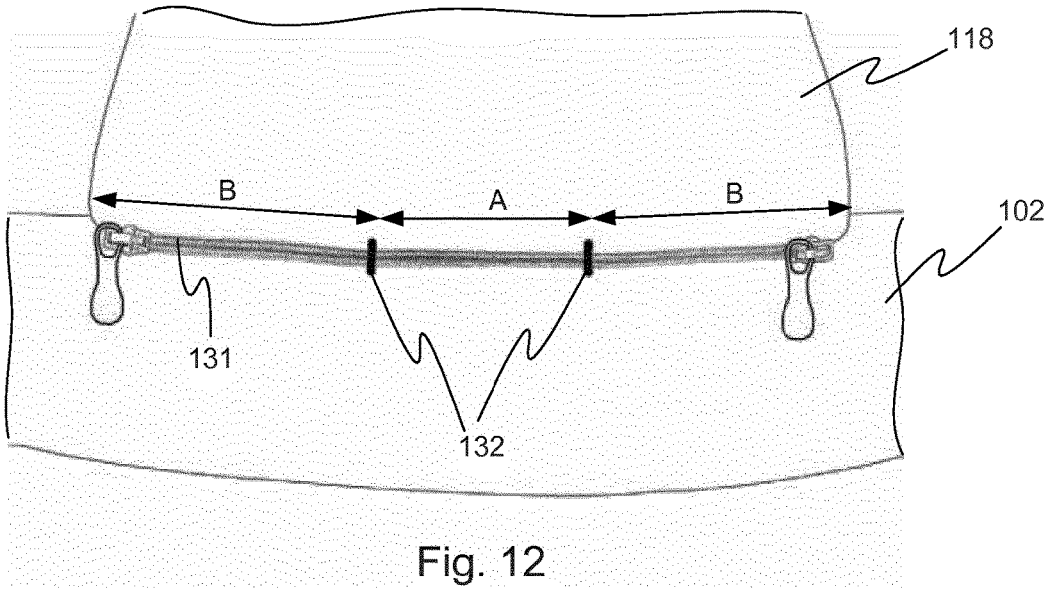

Fig. 12

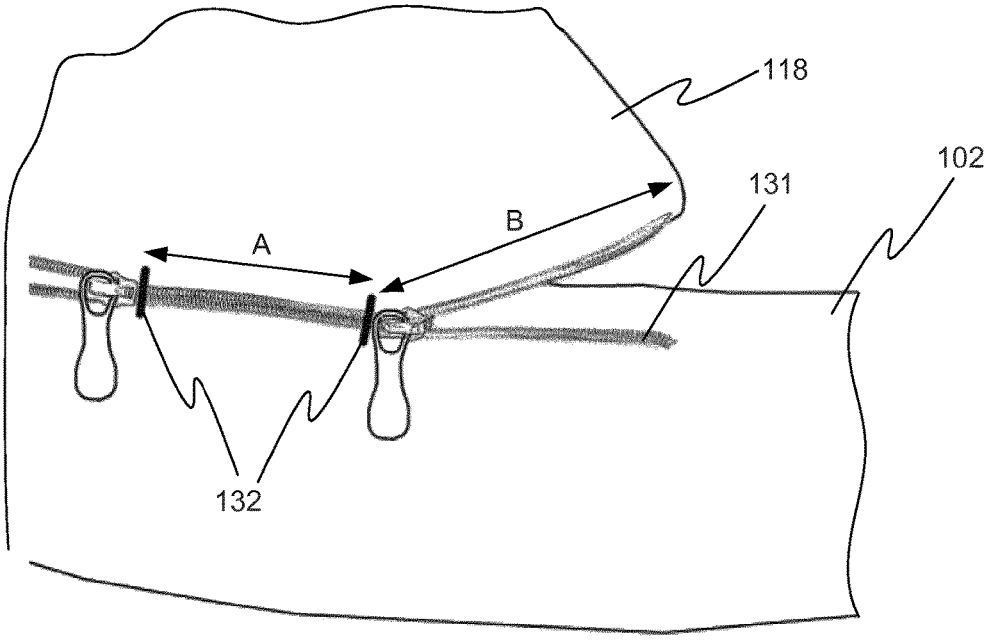

Fig. 13

BABY CARRIER

TECHNICAL FIELD

[0001] The present invention relates to a carrying harness, primarily designed for carrying a small child, in either a forward or a backward position, against the carrier's chest and stomach.

BACKGROUND

[0002] Humans have been carrying our children through all ages, on our backs or towards our chest. Previously, the child was often carried in a simple piece of cloth, but nowadays many parents choose to use a so called baby carrier in order to carry their child close to themselves, and at the same time have their hands free. Since many children like to be carried, they tend to sit in the carrier for long periods of time, meaning that the ergonomics for both child and carrier is important.

[0003] In EP2491825A2 a child carrier is described which comprises inserts by which the width of the seating area of the carrier can be modified when the child is placed in a backwards-facing position. The wider seating area is supposed to promote a more ergonomic seating position for the child, but a drawback with this carrier is that the insert is a detachable part, which is easily lost. Further, this insert can only be used when the child is sitting in a rearward-facing position.

[0004] WO2015/053696A1 describes a baby carrier with an adjustable seat height. This baby carrier is made for children being carried face-to-face with the carrier, and with the adjustable seat height it can be used also when the child has grown. A drawback with this carrier is that it does not allow the child to be carried in a forward position.

[0005] WO2014/011102A1 discloses another type of baby carrier which is mentioned here as a further example of background art. A drawback with this baby carrier is that it is not possible to carry the child in a forward facing seating position.

[0006] From the above it is understood that there is room for improvements.

SUMMARY

[0007] An object of the present invention is to provide a new type of baby carrier which is improved over prior art and which eliminates or at least mitigates the drawbacks discussed above. More specifically, an object of the invention is to provide a baby carrier that provides the child with a comfortable and ergonomic seating position both when carried forwards as well as backwards. These objects are achieved by the technique set forth in the appended independent claims with preferred embodiments defined in the dependent claims related thereto.

[0008] In a first aspect, a baby carrier is provided, which has a front portion, a stomach portion, two shoulder straps, each having a first and a second end portion, and a waist strap. The first end portion of each shoulder strap is fixedly attached to the stomach portion and the second end portion is attached to the front portion. The front portion and stomach portion are attached to the waist strap in such a way that the stomach portion and front portion are at least partly detachably attached to the waist strap. This baby carrier is advantageous in that the connection between the stomach portion and the waist strap is adjustable by being partly detachable. It provides the carrier with flexibility and seating options which existing carriers do not have.

[0009] In one embodiment, a middle portion along both the front portion and stomach portion is fixedly attached to the waist strap, and two side portions, along both the front portion and stomach portion, one on each side of the middle portion, are detachably attached to the waist strap. This is advantageous since it provides the baby carrier with flexibility since the width of the seating area, and the angle of the side portions can be modified.

[0010] In one embodiment, the side portions are attached to the waist strap by zippers which are openable by one of a one step maneuver by means of a common drawstring or two separate zipper pullers. When carrying a child there is a lot to keep track on; holding the child, adjusting his position in the carrier, comforting him etc., it is thus very favourable to be able to maneuver the zippers by one hand only. It is also favourable to operate the zippers by means of separate zipper pullers, since it is a cheap and robust design.

[0011] The side portions may be connected to the waist strap by one of the following fastening means: zippers, buttons, Velcro, press studs or hooks. These fastening means provides the side portions with a secure, but easy maneuverable connection.

[0012] In on embodiment, the intersection in which the front portion and stomach portion are connected to the waist strap comprises a zipper which is openable from two directions. This is advantageous in the production of the baby carrier, since it is easy to attach one single zipper. It is thus more cost efficient, both according to the work spent attaching it and also in that one zipper, although longer, is cheaper than two shorter zippers.

[0013] In another embodiment, the zipper comprises two stops such that the opening is limited to along two side portions of both the front portion and stomach portion.

[0014] Preferably, the baby carrier has a bottom portion fixedly attached to the front portion and detachably attached to the stomach portion, such that it is movable between at least two positions. A first position of the bottom portion is a low position in which said bottom portion follows the outline of a lower part of the front portion and a lower part of the stomach portion. A second position of the bottom portion is a high position in which a distance is provided between the bottom portion and the front portion and stomach portion. The adjustable bottom portion provides the carrier with the flexibility to carry both older (larger) or younger (smaller) children, without compromising with their comfort.

[0015] In one embodiment, the carrier has two interstitial straps, which each has a first end section and a second end section. The first end sections are stitched to the front portion and the second end sections are detachably connected to the shoulder straps. This strap is beneficial for the stability of the baby carrier.

[0016] In a second aspect, a method for adjusting a baby carrier from a backward seating position into a forward seating position is provided. In the method, zipper/-s is/are opened, such that two side portions of the front portion and stomach portion are disengaged from the waist strap, providing the baby carrier with support means for a child's legs when sitting in a forward position. Since it is recommended by pediatrics that carried children sit in the so-called frog-position, in which their upper legs are substantially parallel

with the ground, and their knees at substantially the same level as their hips, it is advantageous for a baby carrier to provide this seating option.

[0017] In one embodiment, the zipper/-s is/are operated by means of a common drawstring. This is advantageous in that the carrier may be transformed from a backwards seating position into a forward seating position in one operation. This is valuable for parents who often need to carry many things in their hands.

[0018] In another embodiment, the zipper/-s is/are operated by means of two separate zipper pullers. This is advantageous in that the opening/closing is uncomplicated and cheap, as well as a robust structure.

BRIEF DESCRIPTION OF THE DRAWINGS

[0019] Embodiments of the invention will be described in the following; references being made to the appended diagrammatical drawings which illustrate non-limiting examples of how the inventive concept can be reduced into practice.

[0020] FIG. **1** is a front view of a baby carrier in accordance with an embodiment of the invention shown in a backwards seating position;

[0021] FIG. **2** is a back view of the baby carrier in a backwards seating position;

[0022] FIG. **3** is a front view of the baby carrier in the backwards seating position with a folded front portion;

[0023] FIG. **4** is an isometric view of the baby carrier in use in the backwards seating position;

[0024] FIG. **5** is an isometric view of a bottom portion of the baby carrier in a low position;

[0025] FIG. **6** is an isometric view of the bottom portion of the baby carrier in a high position;

[0026] FIG. **7** is a front view of the baby carrier in a forwards seating position;

[0027] FIG. **8** is an isometric view of the baby carrier in use in the forwards seating position;

[0028] FIG. **9** is an isometric view of the baby carrier in use in the forwards seating position;

[0029] FIG. **10** is a front view of the baby carrier with an unfolded cap; and

[0030] FIG. **11** is an isometric view of the baby carrier in use with the unfolded cap.

DETAILED DESCRIPTION

[0031] Hereinafter, certain embodiments will be described more fully with reference to the accompanying drawings. The invention may, however, be embodied in many different forms and should not be construed as limited to the embodiments set forth herein;

[0032] rather, these embodiments are provided by way of example so that this disclosure will be thorough and complete, and will fully convey the scope of the invention, such as it is defined in the appended claims, to those skilled in the art.

[0033] In FIGS. **1-4** a baby carrier **100** is shown in a position for a child to sit backwards, that is face-to-face with the carrying person. The carrier **100** has a front portion **101**, a stomach portion **118**, a waist strap **102** and two shoulder straps **103***a*, **103***b*. It also has a bottom portion **109** which will be explained in more detail in connection with FIGS. **5-6**. A first end **129***a*, **129***b* of each shoulder strap **103***a*, **103***b* is attached to an upper part of the stomach portion **118**, and a second end portion **130***a*, **130***b* is releasably attached to a middle part of the front portion **101** by buckles **106***a*, **106***b*. The front portion is further connected to the shoulder straps **103***a*, **103***b* by means of interstitial straps **126***a*, **126***b*. Each interstitial strap has a first end section **127***a*, **127***b* and a second end section **128***a*, **128***b*. The first end sections **127***a*, **127***b* are stitched to the front portion **101** and the second end sections are detachably attached to the shoulder straps **103***a*, **103***b* by buckles **105***a*, **105***b*. The two shoulder straps **103***a*, **103***b* are interconnected by an intermediate strap **107** which can be released by a buckle **110**.

[0034] The waist strap **102** is openable in two locations by buckles **104***a*, **104***b*. As an option, the waist strap **102** is only openable in one location. A front part of the waist strap **102** is attached to a lower part of the front portion **101** as well as to a lower part of the stomach portion **118** along an interface A, B. A middle portion A of the interface between the front portion **101**, stomach portion **118** and the waist strap **102** is sewn or stitched, it is thus not releasable. Two end portions B of the interface are however provided with zippers **111***a*, **111***b*, the function of which will be described later. The zippers **111***a*, **111***b* are arranged inside a fold of fabric when in a closed state, and behind a rim **125** of fabric in an undone state such that they do not irritate or harm neither the carrying person nor the child. The sliders (not shown) of the zippers **111***a*, **111***b* are in one embodiment both connected to an individual drawstring **112***a*, **112***b* each, as well as to a common drawstrings **113**. The common drawstring **113** extends from the slider of each zipper **111***a*, **111***b* and within the fabric of the front portion **101** until it protrudes via an opening **114** at the center of the waistband **102**. In another embodiment (not shown), the zippers are operated by means of the individual sliders, or pullers, only.

[0035] All embodiments of the baby carrier described herein have a stitched portion A and two detachable portions B, but it would also be possible that the interface A, B is provided by two zippers which meet in the middle. In this additional embodiment the front portion **101** and stomach portion **118** are completely detachable from the waist strap **102**. This could be beneficial for example when donning the carrier **100**.

[0036] The zippers **111***a*, **111***b* are in one embodiment attached to the waist strap **102** and the front portion **101**, in another embodiment they are attached to the waist strap **102** and the stomach portion **118**, and as a further option, it may be attached to the stitching between the front portion **101** and stomach portion **118**.

[0037] In an alternative embodiment, the front and stomach portions comprise one integral piece (not shown) and the zippers **111***a*, **111***b* are attached to the waist strap **102** and to this integral piece. In yet another embodiment, an intermediate portion (not shown) is stitched to the waist strap **102**. The zippers **111***a*, **111***b* connect in this embodiment the intermediate portion to the front-/stomach portions. It may also be the other way around, i.e. the intermediate portion is stitched to the front-/stomach portions and the zippers connect the intermediate portion to the waist strap. The purpose of the zippers **111***a*, **111***b* is to disconnect at least a part of both the front portion and the stomach portion from the waist strap. The stomach portion **118** and the front portion **101** are thus at least partly disengageable from the waist strap **102**.

[0038] Further, the baby carrier **100** has a pocket **108** in the front portion **101**, which is closed with a zipper. This will be described in more detail in connection with FIGS. **10** and **11**.

[0039] An upper part **121** of the front portion **101** is foldable into at least two positions. In a first position, as shown e.g. in FIG. **1**, the upper part **121** is raised and provides support for the child's head. In FIG. **3** the upper part **121** is partly lowered, such that the child's head becomes more free. This position of the upper part **121** could be suitable for older children who do not like to feel enclosed by the carrier. A third position of the upper part **121** is shown in FIG. **7**, in which it is completely folded down, allowing a child placed in a forward facing position to have the face free.

[0040] In use, which for instance can be seen in FIG. **4**, the waist strap **102** enfolds the waist, or hips, of a carrying person. The shoulder straps **103***a*, **103***b* extend from the shoulders of the carrier, around his back, and reach the front portion **101** at a level of his chest, where they are releasably attached to the front portion **101** by the buckles **106***a*, **106***b*. The child is placed between the front portion **101** and the stomach portion **118**, with its legs extending through openings **122***a*, **122***b* formed between the front portion **101** and the stomach portion **118**, such that they enfold the carrier's waist, substantially parallel with the waist strap **102**. The child's head is supported by the upper part **121** of the front portion **101**.

[0041] Now referring to FIGS. **5** and **6** where the bottom portion **109** is shown. A first part **115** of the bottom portion **109** is sewn to the front portion **101** by a stitching **117**. An opposite corresponding part **116** of the bottom portion **109** is detachably attached to the stomach portion **118** by a hook-and-eye-connection. As alternatives, the attachment could instead comprise buttons, a zipper, Velcro fastener, snap fasteners, press studs or any other suitable fastening means. It could also be possible to let the second part **116** of the bottom portion **109** be attached to the stomach portion **118** by stitching and the first part **115** be releasably attached to the front portion **101**.

[0042] By the releasable second part **116**, the height of the bottom portion **109** can be changed between two positions. With the hooks of the second part **116** attached in a first mode, a first, lower position is provided, as shown in FIG. **5**, in which the bottom portion **109** follows the outline of a lower part of the front portion **101** and a lower part of the stomach portion **118**. In a second, higher position, as shown in FIG. **6**, the hooks of the second part **116** are attached in another mode, providing a distance D between the bottom portion **109** and the interface A, B between the front portion **101** and the stomach portion **118**. This provides for adaption of the carrier **100** to suit both smaller children, using the higher position, as well as larger children, using the lower seat position.

[0043] In FIGS. **7-9**, the baby carrier **100** is adjusted into a position where the child sits in a forward direction, i.e. faces the same direction as the carrying person. In order to adjust the baby carrier **100** from the backwards seating position into this forward seating position the drawstring **113** is pulled. This brings the zippers **111***a*, **111***b* to open, and the two side portions B to disengage from the waist strap **102**. The disengaged stomach portion **118** and front portion **101** form together support means **119***a*, **119***b* for the carried child's legs. The child is thus sitting in the so called frog-position also when facing forward.

[0044] As is best seen in FIGS. **8-9** (encircled), the two detachable end parts B of the front portion **101** and stomach portion **118** are disengaged, i.e. the zippers are undone. The disengaged end parts B are folded outwards and the legs of the carried child rest in the support means **119***a*, **119***b* formed by the front portion **101** and the stomach portion **118**. In this position of the baby carrier **100**, the child is placed between the front portion **101** and the stomach portion **118**, but such that it faces the same direction as the carrying person. The child's legs extend through the openings **122***a*, **122***b* but are now directed forward and downward. Support for the child's legs is provided by the disengaged parts B, meaning that the child is sitting in the so-called frog position also when facing forward. The upper part **121** of the front portion **101** is folded downwards, such that the child's face is free and he/she can look ahead.

[0045] Referring to FIGS. **10** and **11**, the baby carrier **100** is shown with the pocket **108** opened. This pocket **108** has a foldable cap **120**, here shown in its unfolded state. The cap **120** extends from the pocket **108** on the outside of the front portion **101** and towards the carrying person. It has straps **123***a*, **123***b* which are releasably attached to the shoulder straps **103***a*, **103***b* by e.g. press studs **124***a*, **124***b*, or any other suitable fastening means. The cap **120** covers the baby's head in order to protect it from e.g. rain or sunshine. The pocket **108** includes in one embodiment only the cap **120**, but in another embodiment it also has space for one or a few other small articles, such as a pacifier or a napkin.

[0046] The zippers **111***a*, **111***b* may in another embodiment, as shown in FIGS. **12-13**, be replaced by one zipper **131**, extending over the entire intersection between the front portion **101**, stomach portion **118** and waist strap **102**. The zipper **131** is in this case openable from both directions. Further, it comprises two stops **132**, located such that only parts of the zipper **131** can be opened. The stops **132** are located where the portions B meet the portion A. Thus, the single zipper **131** has the same effect and functionality as the two separate zippers **111***a*, **11***b*. It is favourable in the production of the baby carrier **100** to use one single zipper **131** since it is easy to add.

[0047] In one embodiment, the height of the stomach portion **118** is approximately 20 cm. In other embodiments, it could instead be approximately 10 cm.

[0048] In an aspect, there is provided a baby carrier by which the baby can be carried in two main positions—the first position with the baby's chest towards the carrying person and a second position with the baby's back towards the carrying person. This switch between two main positions being accomplished by means of the carrier being provided with an at least partially detachable interface between the front portion, stomach portion and the waist strap.

[0049] It should be appreciated that the inventive concept is not limited to the embodiments here, and many modifications are feasible within the scope of the invention set forth in the appended claims.

1. A baby carrier comprising a front portion, a stomach portion, two shoulder straps, each comprising a first and a second end portion, and a waist strap, wherein the first end portion of each shoulder strap is fixedly attached to the stomach portion and the second end portion is attached to the front portion, and wherein the front portion and stomach portion are attached to the waist strap, and wherein the

stomach portion and front portion are at least partly detachably attached to the waist strap.

2. The baby carrier according to claim **1**, wherein a middle portion along both the front portion and stomach portion is fixedly attached to the waist strap, and wherein two side portions along both the front portion and stomach portion, one on each side of the middle portion, are detachably attached to the waist strap.

3. The baby carrier according to claim **2**, wherein the side portions are connected to the waist strap by one of the following fastening means: zippers, buttons, Velcro, press studs or hooks.

4. The baby carrier according to claim **1**, wherein the intersection in which the front portion and stomach portion are connected to the waist strap comprises a zipper which is openable from two directions.

5. The baby carrier according to claim **4**, wherein the zipper comprises two stops such that the opening extends along two side portions of both the front portion and stomach portion.

6. The baby carrier according to claim **2**, wherein the side portions are attached to the waist strap by zipper(s) which is/are openable by one of a one-step maneuver by means of a common drawstring or two separate zipper pullers.

7. The baby carrier according to claim **1**, further comprising a bottom portion fixedly attached to the front portion and detachably attached to the stomach portion, such that it is movable between at least two positions.

8. The baby carrier according to claim **7**, wherein a first position of the bottom portion is a low position in which said bottom portion follows the outline of a lower part of the front portion and a lower part of the stomach portion, and wherein a second position of the bottom portion is a high position in which a distance is provided between the bottom portion and said front portion and stomach portion.

9. The baby carrier according to claim **1**, further comprising two interstitial straps, each comprising a first end section and a second end section, wherein the first end sections are stitched to the front portion and the second end sections are detachably connected to the shoulder straps.

10. A method for adjusting a baby carrier according to claim **1** from a backward seating position into a forward seating position, in which method zipper(s) is/are opened such that two side portions of the front portion and stomach portion are disengaged from the waist strap, providing the baby carrier with support means for a child's legs when sitting in a forward position.

11. The method for adjusting a baby carrier according to claim **10**, wherein the zipper(s) is/are operated by means of a common drawstring.

12. The method for adjusting a baby carrier according to claim **10**, wherein the zipper(s) is/are operated by means of two separate zipper pullers.

* * * * *