US011786055B2

(12) **United States Patent**
Telford

(10) **Patent No.: US 11,786,055 B2**
(45) **Date of Patent: *Oct. 17, 2023**

(54) **ADJUSTABLE CHILD CARRIER**

(71) Applicant: **The ERGO Baby Carrier, Inc.**, Torrance (CA)

(72) Inventor: **Rodney V. Telford**, Torrance, CA (US)

(73) Assignee: **The ERGO Baby Carrier, Inc.**, Torrance, CA (US)

(*) Notice: Subject to any disclaimer, the term of this patent is extended or adjusted under 35 U.S.C. 154(b) by 0 days.

This patent is subject to a terminal disclaimer.

(21) Appl. No.: **18/136,979**

(22) Filed: **Apr. 20, 2023**

(65) **Prior Publication Data**

US 2023/0255363 A1 Aug. 17, 2023

Related U.S. Application Data

(63) Continuation of application No. 18/108,979, filed on Feb. 13, 2023, which is a continuation of application No. 17/349,821, filed on Jun. 16, 2021, now Pat. No. 11,583,104, which is a continuation of application No. 16/551,286, filed on Aug. 26, 2019, now Pat. No. 11,051,634, which is a continuation of application No. 15/337,813, filed on Oct. 28, 2016, now Pat. No. 10,426,275.

(60) Provisional application No. 62/248,745, filed on Oct. 30, 2015.

(51) **Int. Cl.**
A47D 13/02 (2006.01)

(52) **U.S. Cl.**
CPC ***A47D 13/025*** (2013.01)

(58) **Field of Classification Search**
CPC A47D 13/025; A47D 13/02
USPC 224/159
See application file for complete search history.

(56) **References Cited**

U.S. PATENT DOCUMENTS

268,932	A	12/1882	Poirier
569,258	A	10/1896	Walker
576,292	A	2/1897	Vanderburgh
982,376	A	1/1911	Macfarlane
2,212,746	A	8/1940	Nunn
2,599,474	A	6/1952	Mills
2,994,300	A	8/1961	Josephine

(Continued)

FOREIGN PATENT DOCUMENTS

AU	2012209531	A1	7/2013
AU	2013287314	A1	1/2015

(Continued)

OTHER PUBLICATIONS

Appendix BB: Consumer Reports Guide to Baby Products by Sandy Jones, published in 2001 ("Guide to Baby Products") Invalidity Chart, *The Ergo Baby Carrier, Inc.* v. *BOBA Inc.*, Case No. 2:15-cv-08946, In the United States District Court for the Central District of California, Jul. 15, 2016, 11 pgs.

(Continued)

Primary Examiner — Peter N Helvey
(74) *Attorney, Agent, or Firm* — ERISE IP, P.A.

(57) **ABSTRACT**

An adjustable child carrier includes an adjustable bucket seat that can be adjusted to accommodate children of a wide range of sizes. The child carrier includes one or more adjustments that work alone or in cooperation to adjust the depth and width of the bucket seat area provided by the child carrier. The carrier is capable of supporting children of various sizes in an ergonomic position appropriate for the child's size.

30 Claims, 9 Drawing Sheets

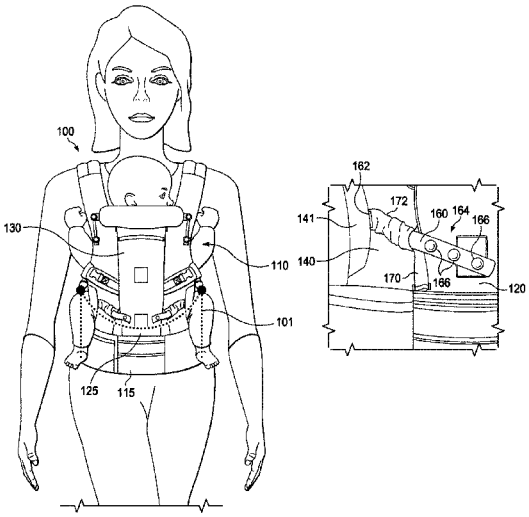

(56) **References Cited**

U.S. PATENT DOCUMENTS

3,097,773	A	7/1963	Arthur
3,229,873	A	1/1966	Hershman
3,275,373	A	9/1966	Card
3,327,914	A	6/1967	Abram
3,481,517	A	12/1969	Aukerman
3,780,919	A	12/1973	Hansson
3,840,162	A	10/1974	Horenstein et al.
3,871,562	A	3/1975	Grenier
3,964,654	A	6/1976	Wittenberger
4,009,808	A	3/1977	Sharp
D247,199	S	2/1978	Carter
4,139,131	A	2/1979	Hathaway
4,149,687	A	4/1979	Nunemacher
D253,558	S	12/1979	Carter
4,234,229	A	11/1980	Arnold
4,273,215	A	6/1981	Leggett
4,318,502	A	3/1982	Lowe et al.
4,324,430	A	4/1982	Dimas et al.
4,333,591	A	6/1982	Case
D266,800	S	11/1982	Kula et al.
4,361,259	A	11/1982	Chanter
4,402,440	A	9/1983	Purtzer et al.
4,434,920	A	3/1984	Moore
4,467,945	A	8/1984	Schaapveld
4,469,259	A	9/1984	Krich et al.
4,479,595	A	10/1984	Opsal
D276,478	S	11/1984	Fallon
4,480,775	A	11/1984	Stanford
4,492,326	A	1/1985	Storm
D277,811	S	3/1985	Moore
4,550,800	A	11/1985	Dietrich
4,579,264	A	4/1986	Napolitano
4,651,366	A	3/1987	Lande et al.
4,666,017	A	5/1987	Zimmerman
4,724,988	A	2/1988	Tucker
4,746,044	A	5/1988	Arvizu et al.
4,765,279	A	8/1988	Klickstein
4,800,629	A	1/1989	Ikeda
4,867,464	A	9/1989	Cook
4,946,119	A	8/1990	Hellhake
4,986,458	A	1/1991	Linday
5,071,047	A	12/1991	Cordisco
5,076,598	A	12/1991	Nauman
D324,607	S	3/1992	Nelson
5,114,059	A	5/1992	Thatcher
5,129,406	A	7/1992	Magnusen et al.
D334,253	S	3/1993	Balzarini
5,205,450	A	4/1993	Derosier
5,205,451	A	4/1993	Manzer
5,224,637	A	7/1993	Colombo
5,240,159	A	8/1993	Gregory
5,246,152	A	9/1993	Dotseth
5,284,279	A	2/1994	Sason et al.
5,325,818	A	7/1994	Leach
D357,800	S	5/1995	Roan et al.
5,490,620	A	2/1996	Bergqvist
D370,996	S	6/1996	Shimura et al.
5,522,528	A	6/1996	Petricola
5,564,612	A	10/1996	Gregory
5,570,823	A	11/1996	Lindy
D377,116	S	1/1997	Shimura et al.
D385,105	S	10/1997	Fair
5,673,828	A	10/1997	Raedel et al.
5,678,739	A	10/1997	Darling et al.
5,690,258	A	11/1997	Kataoka
5,692,655	A	12/1997	Fair et al.
5,699,555	A	12/1997	Schunter
5,725,139	A	3/1998	Smith
D395,161	S	6/1998	Fair et al.
5,772,088	A	6/1998	Nelson
5,791,535	A	8/1998	Roan et al.
D397,867	S	9/1998	Fair et al.
5,799,851	A	9/1998	Wulf et al.
5,813,580	A	9/1998	Fair
5,819,341	A	10/1998	Simantob et al.
5,848,576	A	12/1998	Colaianni
5,848,741	A	12/1998	Fair
5,927,235	A	7/1999	Olaiz
5,934,528	A	8/1999	Higuchi
D414,032	S	9/1999	Howell
5,988,742	A	11/1999	Stevens
6,055,686	A	5/2000	Knight
6,073,820	A	6/2000	Drobinski
6,125,792	A	10/2000	Gee
6,155,579	A	12/2000	Eyman et al.
6,164,509	A	12/2000	Gausling et al.
6,179,175	B1	1/2001	Painter
D437,996	S	2/2001	Fair et al.
6,182,873	B1	2/2001	Christopher et al.
6,257,468	B1	7/2001	Yamazoe et al.
D453,066	S	1/2002	Norman
D455,546	S	4/2002	Norman
6,364,186	B1	4/2002	Gilmour et al.
6,409,060	B2	6/2002	Donine
6,415,969	B1	7/2002	Higuchi
6,443,339	B1	9/2002	Higuchi
6,499,165	B1	12/2002	Morgillo
6,520,391	B2	2/2003	Yen
6,598,771	B2	7/2003	Norman
6,609,642	B2	8/2003	Heinz et al.
D484,685	S	1/2004	Kassai et al.
6,681,973	B2	1/2004	Crumrine
D486,635	S	2/2004	Yagisawa
6,715,651	B2	4/2004	Gal
6,722,543	B1	4/2004	Fitzgerald et al.
6,763,983	B2	7/2004	Norman
6,772,925	B2	8/2004	O'Hare
D507,869	S	8/2005	Liistro et al.
D509,056	S	9/2005	Shiraishi et al.
7,073,866	B1	7/2006	Berdahl
7,168,600	B2	1/2007	Hwang
7,204,462	B2	4/2007	Lembo
7,204,468	B2	4/2007	Kintzele et al.
7,255,620	B1	8/2007	Shepherd et al.
7,322,498	B2	1/2008	Frost
7,343,880	B2	3/2008	Bergkvist
7,494,031	B2	2/2009	Kassai et al.
D590,568	S	4/2009	Crutchfield
D597,788	S	8/2009	Ellis
D615,750	S	5/2010	Jones et al.
7,766,199	B1	8/2010	Caperon
D623,401	S	9/2010	Bergkvist et al.
D623,402	S	9/2010	Bergkvist et al.
D632,887	S	2/2011	Jones et al.
7,878,587	B1	2/2011	Leach
7,886,946	B2	2/2011	Gray
8,028,871	B2	10/2011	Gray
8,042,869	B2	10/2011	McClintock et al.
D647,693	S	11/2011	Olegård et al.
D649,345	S	11/2011	Bergkvist et al.
D655,495	S	3/2012	Sauer et al.
8,127,385	B1	3/2012	Goutevenier
8,172,116	B1	5/2012	Lehan et al.
D664,351	S	7/2012	Bergkvist et al.
8,272,546	B2	9/2012	Leistensnider
8,403,189	B2	3/2013	Nyberg et al.
8,408,435	B2	4/2013	Refsum
8,424,732	B1	4/2013	Lehan et al.
8,453,894	B2	6/2013	Jung et al.
D692,227	S	10/2013	Andren et al.
8,579,168	B2	11/2013	Zack et al.
8,590,757	B2	11/2013	Frost
8,627,988	B2	1/2014	Bergkvist
8,636,181	B2	1/2014	Gunter et al.
8,650,663	B2	2/2014	Fair et al.
8,701,949	B1	4/2014	Lehan et al.
8,726,437	B2	5/2014	Hardesty
8,745,794	B1	6/2014	McDermott
8,752,739	B2	6/2014	Bergkvist et al.
8,973,794	B2	3/2015	Bergkvist et al.
9,022,260	B2	5/2015	Frost
D733,419	S	7/2015	Wikner et al.
9,179,758	B2	11/2015	Calilung et al.
9,185,993	B2	11/2015	Telford et al.

(56) **References Cited**

U.S. PATENT DOCUMENTS

9,220,352	B2	12/2015	Frost
9,314,113	B1	4/2016	Lehan
9,357,852	B2	6/2016	Salazar et al.
9,357,854	B2	6/2016	Sundberg et al.
9,380,887	B2	7/2016	Frost
9,380,888	B2	7/2016	Telford et al.
9,439,515	B2	9/2016	Kim
9,713,391	B2	7/2017	Telford et al.
9,788,664	B2	10/2017	Andren et al.
D803,549	S	11/2017	Warfaa et al.
D807,025	S	1/2018	Elmberg et al.
9,877,595	B2	1/2018	Wang
9,877,596	B2	1/2018	Schaarschmidt
D811,082	S	2/2018	Lehan
9,955,797	B2	5/2018	Telford et al.
10,076,194	B2	9/2018	Wikner et al.
10,159,357	B2	12/2018	Frost
10,172,478	B2	1/2019	Telford et al.
10,264,895	B2	4/2019	Lindeman et al.
10,271,663	B2	4/2019	Salazar et al.
D851,916	S	6/2019	Björkenkvist et al.
10,426,275	B2	10/2019	Telford
10,433,656	B2	10/2019	Lundh
10,441,090	B2	10/2019	Lehan
10,506,885	B2	12/2019	Telford et al.
10,653,251	B1	5/2020	Young
10,702,074	B2	7/2020	Najafi et al.
10,736,436	B2	8/2020	Telford
10,743,678	B2	8/2020	Salazar et al.
10,905,252	B2	2/2021	Fan
D913,683	S	3/2021	Lehan
11,026,521	B2	6/2021	Telford et al.
11,051,634	B2	7/2021	Telford
11,191,368	B2	12/2021	Manouchehri et al.
11,219,317	B2	1/2022	Telford
11,272,791	B2	3/2022	Warner
11,297,957	B2	4/2022	Telford
D955,102	S	6/2022	Kleremo et al.
11,357,337	B2	6/2022	Dolk et al.
11,440,444	B2	9/2022	Shahbandar
11,684,175	B2	6/2023	Telford
2002/0011503	A1	1/2002	Hwang
2002/0175194	A1	11/2002	Norman
2003/0106916	A1	6/2003	Boone
2003/0178452	A1	9/2003	Norman
2004/0149790	A1	8/2004	Kassai et al.
2004/0155078	A1	8/2004	Hwang
2004/0238579	A1	12/2004	Krogh
2005/0045674	A1	3/2005	Rehbein
2005/0067549	A1	3/2005	Kintzele et al.
2005/0155995	A1	7/2005	Lee
2005/0184114	A1	8/2005	Hoff et al.
2005/0242136	A1	11/2005	Moriguchi et al.
2005/0279785	A1	12/2005	Liistro et al.
2006/0011678	A1	1/2006	Kassai et al.
2006/0076373	A1	4/2006	LaBelle et al.
2006/0130220	A1	6/2006	Morgan et al.
2006/0261104	A1	11/2006	Zambrzycki
2007/0029356	A1	2/2007	Moriguchi et al.
2007/0057003	A1	3/2007	Keyes
2007/0241146	A1	10/2007	Nyberg et al.
2007/0293656	A1	12/2007	Caravan et al.
2008/0047987	A1	2/2008	Price
2008/0283561	A1	11/2008	Parness et al.
2010/0025441	A1	2/2010	Blaney
2010/0072236	A1	3/2010	Parness et al.
2010/0147910	A1	6/2010	Schachtner
2010/0187269	A1	7/2010	Leistensnider
2010/0308087	A1	12/2010	Lindbloom
2010/0308088	A1	12/2010	Lindblom
2011/0062195	A1	3/2011	Jones et al.
2011/0101051	A1	5/2011	Parness et al.
2011/0163136	A1	7/2011	Billingham
2011/0290831	A1	12/2011	Wang
2012/0037284	A1	2/2012	Korbonski
2012/0043359	A1	2/2012	Bergkvist et al.
2012/0061429	A1	3/2012	Sauer
2012/0187161	A1	7/2012	Bergkvist
2012/0187162	A1	7/2012	Bergkvist et al.
2012/0205406	A1	8/2012	Schachtner
2012/0241487	A1	9/2012	Zack et al.
2012/0298702	A1	11/2012	Jung et al.
2014/0097215	A1	4/2014	Caperon
2014/0167462	A1	6/2014	Lai et al.
2014/0263491	A1	9/2014	Telford et al.
2014/0284361	A1	9/2014	Wang
2014/0319189	A1	10/2014	Toppener-Visser
2015/0069097	A1	3/2015	Lindblom
2015/0208821	A1	7/2015	Frost
2015/0223614	A1	8/2015	Pos
2015/0272342	A1	10/2015	Schaarschmidt
2015/0374139	A1	12/2015	Salazar et al.
2016/0015187	A1	1/2016	Telford et al.
2016/0150893	A1	6/2016	Salazar et al.
2016/0227940	A1	8/2016	Wikner et al.
2016/0270555	A1	9/2016	Telford et al.
2016/0278537	A1	9/2016	Frost
2016/0296034	A1	10/2016	Telford
2016/0316933	A1	11/2016	Antunovic
2017/0119173	A1	5/2017	Telford
2017/0150826	A1	6/2017	Salazar et al.
2017/0196374	A1	7/2017	Chen
2017/0251829	A1	9/2017	Telford et al.
2018/0000258	A1	1/2018	Lehan
2018/0116426	A1	5/2018	Telford
2018/0184813	A1	7/2018	Salazar et al.
2018/0192788	A1	7/2018	Telford et al.
2018/0199730	A1	7/2018	Lundh
2018/0235379	A1	8/2018	Lindeman et al.
2018/0296005	A1	10/2018	Tsai
2019/0014920	A1	1/2019	Matsuyama
2019/0075936	A1	3/2019	Salazar et al.
2019/0075937	A1	3/2019	Salazar et al.
2019/0090657	A1	3/2019	Telford et al.
2019/0150633	A1	5/2019	Flaunty et al.
2019/0223619	A1	7/2019	Lindeman et al.
2019/0350379	A1	11/2019	Antunovic
2019/0380508	A1	12/2019	Telford
2020/0077806	A1	3/2020	Telford et al.
2020/0146464	A1	5/2020	Manouchehri et al.
2020/0163466	A1	5/2020	Telford
2020/0253392	A1	8/2020	Sahadi et al.
2020/0268169	A1	8/2020	Telford
2021/0059431	A1	3/2021	Elmberg
2021/0186234	A1	6/2021	Dolk et al.
2021/0361079	A1	11/2021	Salazar et al.
2021/0393049	A1	12/2021	Telford
2022/0176853	A1	6/2022	Shahbandar

FOREIGN PATENT DOCUMENTS

AU	2015377212	A1	8/2017
CA	1332928	C	11/1994
CA	2159241	A1	3/1996
CA	2240015	A1	1/2000
CA	154976	A	9/2014
CA	2971848	A1	7/2016
CA	3160906	A1	11/2022
CN	203873395	U	10/2014
CN	104411213	A	3/2015
CN	204363531	U	6/2015
CN	105377085	A	3/2016
CN	106263837	A	1/2017
CN	104411213	A	1/2018
CN	108135370	A	6/2018
CN	108244885	A	7/2018
CN	109480542	A	3/2019
CN	109480543	A	3/2019
CN	110897429	A	3/2020
CN	115399601	A	11/2022
DE	29519530	U1	2/1996
DE	29519530		4/1996
DE	22912951	U1	1/2000
DE	20116046	U1	1/2002

(56) **References Cited**

FOREIGN PATENT DOCUMENTS

DE	202008014412	U1	3/2009
DE	202008014412		9/2009
DE	602008000939		5/2010
DE	202010011906	U1	11/2010
DE	202011103052	U1	8/2011
DE	202012104318	U1	11/2012
DE	202012104318		2/2013
DE	202014100616	U1	5/2014
EP	0046672	A1	3/1982
EP	0437365	A1	7/1991
EP	0662292	A1	7/1995
EP	0662292	B1	7/1998
EP	0995380	A1	4/2000
EP	995380	A1	4/2000
EP	1055382	A1	11/2000
EP	1591044	A1	11/2005
EP	1707082	A1	10/2006
EP	1765123	A2	3/2007
EP	1893058	A1	3/2008
EP	1992257	A1	11/2008
EP	1765123	B1	6/2011
EP	2421413	A1	2/2012
EP	2667747	A1	12/2013
EP	2667748	A1	12/2013
EP	2810587	A1	12/2014
EP	2872012	A1	5/2015
EP	3054813	A1	8/2016
EP	3244778	A1	11/2017
EP	3755183	A1	12/2020
EP	4094639	A1	11/2022
ES	251704	U	10/1980
ES	251704		3/1981
ES	2585565		10/2016
FR	1545820	A	11/1968
FR	2524288		10/1983
FR	2524288	A1	10/1983
FR	2794010	A1	12/2000
FR	2794010	B1	7/2001
FR	2806279	A3	9/2001
FR	2806279		2/2002
FR	2823655	A1	10/2002
FR	2851436	A1	8/2004
FR	2823655	B1	11/2004
GB	2026848	A	2/1980
GB	2028633	A	3/1980
GB	2026848	B	9/1982
GB	2260687	A	4/1993
GB	2314026	A	12/1997
GB	2314026	B	12/1999
GB	2346314	A	8/2000
ID	201800806		1/2018
JP	11978146441		4/1953
JP	53146441		12/1978
JP	53155443		12/1978
JP	54108131		8/1979
JP	63187956		12/1988
JP	172158		5/1990
JP	2124107		5/1990
JP	09099842		10/1995
JP	9121987		5/1997
JP	09173185		7/1997
JP	10313929		2/1998
JP	10108764		4/1998
JP	10201580	A	8/1998
JP	10313929		12/1998
JP	11046938		2/1999
JP	3073766	U	12/2000
JP	2001104115	A	4/2001
JP	2002186543	A	7/2002
JP	3403599		5/2003
JP	2003225119	A	8/2003
JP	2004000687	A	1/2004
JP	2004154468	A	6/2004
JP	2005052584	A	3/2005
JP	2005118472	A	5/2005
JP	2005131146	A	5/2005
JP	2005185426	A	7/2005
JP	2005288107	A	10/2005
JP	2005312823	A	11/2005
JP	2005312826	A	11/2005
JP	4170894	B2	10/2008
JP	2012187352	A	10/2012
JP	2012524603	A	10/2012
JP	2013118900	A	6/2013
JP	2014176494	A	9/2014
JP	5895766	B2	3/2016
JP	2016512124	A	4/2016
JP	5921273	B2	5/2016
JP	6130251	B2	5/2017
JP	6485931	B2	3/2019
JP	6530576	B1	6/2019
KR	2000508690000		10/2000
KR	1020020008534	A	1/2002
KR	2003126950000		4/2003
KR	2003158200000		6/2003
KR	2003182590000		6/2003
KR	2003201940000		7/2003
KR	200324019	Y1	8/2003
KR	2003337880000		11/2003
KR	1020040064749	A	7/2004
KR	20060047603		5/2006
KR	1020070039806	A	4/2007
KR	2020090008715	A	1/2009
KR	200447518	Y1	1/2010
KR	2020100010120	A	2/2010
KR	2020100010120	U	10/2010
KR	2020110005263	A	1/2011
KR	2020110005263	U	5/2011
KR	101134560	B1	4/2012
KR	200459659	Y1	4/2012
KR	1020120070544	A	6/2012
KR	200462354	Y1	9/2012
KR	101197918	B1	11/2012
KR	1020130107167	A	10/2013
KR	101426751	B1	8/2014
KR	200477837	Y1	7/2015
KR	1020160112243	A	9/2016
KR	20180031827	A	3/2018
KR	101929748	B1	12/2018
NZ	733728		7/2017
PH	12017501292	A1	2/2018
PH	12022050229	B	4/2023
SG	11201705794		1/2015
TW	201332466	A	8/2013
WO	9505952	A1	3/1995
WO	199505952		3/1995
WO	200189978		5/2001
WO	2001089978	A1	11/2001
WO	2009034233	A1	3/2009
WO	2010123447	A1	10/2010
WO	2011011158	A2	1/2011
WO	2011071441	A1	6/2011
WO	2012079787	A1	6/2012
WO	2012109467	A1	8/2012
WO	2013079296	A1	6/2013
WO	2014033134	A1	3/2014
WO	2014160355	A1	10/2014
WO	2015053696	A1	4/2015
WO	20150053696	A1	4/2015
WO	2016153411	A1	9/2016
WO	2017075500	A1	5/2017
WO	2017095752	A1	6/2017
WO	2018081603	A1	5/2018
WO	2020163585	A1	8/2020

OTHER PUBLICATIONS

Appendix BB: U.S. Pat. No. 3,780,919 ("Hansson") Invalidity Chart, *The Ergo Baby Carrier, Inc.* v. *BOBA Inc.*, Case No. 2:15-cv-08946, In the United States District Court for the Central District of California, Jul. 15, 2016, 4 pgs.

Appendix BB: U.S. Pat. No. 3,780,919 ("Hansson") Invalidity Chart, *The Ergo Baby Carrier, Inc.* v. *BOBA Inc.*, Case No.

(56) **References Cited**

OTHER PUBLICATIONS

2:15-ov-08946, In the United States District Court for the Central District of California, Jul. 15, 2016, 4 pgs.
Appendix BBB: UK Patent App. No. GB 2026848 ("David") Invalidity Chart, *The Ergo Baby Carrier, Inc.* v. *BOBA Inc.*, Case No. 2: 15-cv-08946, In the United States District Court for the Central District of California, Jul. 15, 2016, 5 pgs.
Appendix C: Canadian Patent No. 1332928 ("Pettersen") Invalidity Chart, *The Ergo Baby Carrier, Inc.* v. *BOBA Inc.*, Case No. 2:15-cv-08946, In the United States District Court for the Central District of California, Jul. 15, 2016, 18 pgs.
Appendix CC: "Physiological Strain Due to Load Carrying" by Michael Holewijn, published in European Journal of Applied Physiology and Occupational Physiology, Feb. 1990 ("Holewijn") Invalidity Chart, *The Ergo Baby Carrier, Inc.* v. *BOBA Inc.*, Case No. 2:15-cv-08946, In the United States District Court for the Central District of California, Jul. 15, 2016, 12 pgs.
Appendix CCC: DIY Baby Sling System Invalidity Chart, *The Ergo Baby Carrier, Inc.* v. *BOBA Inc.*, Case No. 2: 15-cv-08946, In the United States District Court for the Central District of California, Jul. 15, 2016, 11 pgs.
Appendix D: babyTrekker Instruction Manual copyright date stamped 1998 ("1998 babyTrekker Manual") Invalidity Chart, *The Ergo Baby Carrier, Inc.* v. *BOBA Inc.*, Case No. 2: 15-cv-08946, In the United States District Court for the Central District of California, Jul. 15, 2016, 19 pgs.
Appendix DD: Kelty Kangaroo Invalidity Chart, *The Ergo Baby Carrier, Inc.* v. *BOBA Inc.*, Case No. 2: 15-cv-08946, In the United States District Court for the Central District of California, Jul. 15, 2016, 7 pgs.
Appendix DDD: Kozy System Invalidity Chart, *The Ergo Baby Carrier, Inc.* v. *BOBA Inc.*, Case No. 2: 15-cv-08946, In the United States District Court for the Central District of California, Jul. 15, 2016, 16 pgs.
Appendix E: babyTrekker Instruction Manual ("babyTrekker Manual") Invalidity Chart, *The Ergo Baby Carrier, Inc.* v. *BOBA Inc.*, Case No. 2: 15-cv-08946, In the United States District Court for the Central District of California, Jul. 15, 2016, 21 pgs.
Appendix EE: Kirkiliones Invalidity Chart, *The Ergo Baby Carrier, Inc.* v. *BOBA Inc.*, Case No. 2: 15-cv-08946, In the United States District Court for the Central District of California, Jul. 15, 2016, 9 pgs.
Appendix EEE: Packababy System Invalidity Chart, *The Ergo Baby Carrier, Inc.* v. *BOBA Inc.*, Case No. 2: 15-cv-08946, In the United States District Court for the Central District of California, Jul. 15, 2016, 17 pgs.
Appendix F: babyTrekker System Invalidity Chart, *The Ergo Baby Carrier, Inc.* v. *BOBA Inc.*, Case No. 2: 15-cv-08946, In the United States District Court for the Central District of California, Jul. 15, 2016, 16 pgs.
Appendix FF: "Physicological, Biomechanical and Medical Aspects of Soldier Load Carriage" by Joseph Knapik, Presented in Jun. 2000 ("Knapik") Invalidity Chart, *The Ergo Baby Carrier, Inc.* v. *BOBA Inc.*, Case No. 2: 15-cv-08946, In the United States District Court for the Central District of California, Jul. 15, 2016, 11 pgs.
Appendix FFF: Sakara System Invalidity Chart, *The Ergo Baby Carrier, Inc.* v. *BOBA Inc.*, Case No. 2:15-cv-08946, In the United States District Court for the Central District of California, Jul. 15, 2016, 17 pgs.
Appendix G: First Journey System Invalidity Chart, *The Ergo Baby Carrier, Inc.* v. *BOBA Inc.*, Case No. 2:15-cv-08946, In the United States District Court for the Central District of California, Jul. 15, 2016, 21 pgs.
Appendix G: First Journey System Invalidity *The Ergo Baby Carrier, Inc.* v. *BOBA Inc.*, Case No. 2: 15-cv-08946, In the United States District Court for the Central District of California, Jul. 15, 2016, 21 pgs.
Appendix GG: U.S. Pat. No. 4,434,920 ("Moore") Invalidity Chart, *The Ergo Baby Carrier, Inc.* v. *BOBA Inc.*, Case No. 2: 15-cv-08946, In the United States District Court for the Central District of California, Jul. 15, 2016, 6 pgs.
Appendix GGG: Sutemi System Invalidity Chart, *The Ergo Baby Carrier, Inc.* v. *BOBA Inc.*, Case No. 2:15-cv-08946, In the United States District Court for the Central District of California, Jul. 15, 2016, 12 pgs.
Appendix H: French Patent Pub. No. 2795010 ("Ducruet") Invalidity Chart, *The Ergo Baby Carrier, Inc.* v. *BOBA Inc.*, Case No. 2: 15-cv-08946, In the United States District Court for the Central District of California, Jul. 15, 2016, 8 pgs.
Appendix HH: "A Static Biomechanical Load Carriage Model" by R.P. Pelot et al., Presented in Jun. 2000 ("Pelot") Invalidity Chart, *The Ergo Baby Carrier, Inc.* v. *BOBA Inc.*, Case No. 2: 15-cv-08946, In the United States District Court for the Central District of California, Jul. 15, 2016, 13 pgs.
Appendix HHH: Casses Invalidity Chart, *The Ergo Baby Carrier, Inc.* v. *BOBA Inc.*, Case No. 2:15-cv-08946, In the United States District Court for the Central District of California, Jul. 15, 2016, 5 pgs.
Appendix I: U.S. Pat. No. 4,986,458 ("Linday") Invalidity Chart, *The Ergo Baby Carrier, Inc.* v. *BOBA Inc.*, Case No. 2: 15-cv-08946, In the United States District Court for the Central District of California, Jul. 15, 2016, 16 pgs.
Appendix II: Pony Ride Invalidity Chart, *The Ergo Baby Carrier, Inc.* v. *BOBA Inc.*, Case No. 2:15-cv-08946, In the United States District Court for the Central District of California, Jul. 15, 2016, 7 pgs.
Appendix III: U.S. Pat. No. 6,182,873 ("Christopher") Invalidity Chart, *The Ergo Baby Carrier, Inc.* v. *BOBA Inc.*, Case No. 2: 15-cv-08946, In the United States District Court for the Central District of California, Jul. 15, 2016, 2 pgs.
Appendix J: U.S. Pat. No. 4,469,259 ("Krich") Invalidity Chart, *The Ergo Baby Carrier, Inc.* v. *BOBA Inc.*, Case No. 2: 15-cv-08946, In the United States District Court for the Central District of California, Jul. 15, 2016, 8 pgs.
Appendix JJ: U.S. Pat. No. 5,114,059 ("Thatcher") Invalidity Chart, *The Ergo Baby Carrier, Inc.* v. *BOBA Inc.*, Case No. 2: 15-cv-08946, In the United States District Court for the Central District of California, Jul. 15, 2016, 4 pgs.
Appendix JJJ: U.S. Pat. No. 6,155,579 ("Eyman") Invalidity Chart, *The Ergo Baby Carrier, Inc.* v. *BOBA Inc.*, Case No. 2: 15-cv-08946, In the United States District Court for the Central District of California, Jul. 15, 2016, 2 pgs.
Appendix JJJ: U.S. Pat. No. 6,155,579 ("Eyman") Invalidity Chart, *The Ergo Baby Carrier, Inc.* v. *BOBA Inc.*, Case No. 2: 15-cv-08946, In the United States District Court for he Central District of California, Jul. 15, 2016, 2 pgs.
Appendix K: "A Blue-Jean Person Pack," by E.A. Byrnes as published on p. 164 of the May/Jun. 1982 issue of the Mother Earth News ("Byrnes") Invalidity Chart, *The Ergo Baby Carrier, Inc.* v. *BOBA Inc.*, Case No. 2:15-cv-08946, In the United States District Court for the Central District of California, Jul. 15, 2016, 21 pgs.
Appendix KK: Weego System Invalidity Chart, *The Ergo Baby Carrier, Inc.* v. *BOBA Inc.*, Case No. 2:15-cv-08946, In the United States District Court for the Central District of California, Jul. 15, 2016, 20 pgs.
Appendix KKK: U.S. Pat. No. 5,848,741 ("Fair") Invalidity Chart, *The Ergo Baby Carrier, Inc.* v. *BOBA Inc.*, Case No. 2: 15-cv-08946, In the United States District Court for the Central District of California, Jul. 15, 2016, 2 pgs.
Appendix L: EP Patent No. 0437365 ("Gunderman") Invalidity Chart, *The Ergo Baby Carrier, Inc.* v. *BOBA Inc.*, Case No. 2: 15-cv-08946, In the United States District Court for the Central District of California, Jul. 15, 2016, 14 pgs.
Appendix LL: U.S. Pat. No. 6,257,468 ("Yamazoe") Invalidity Chart, *The Ergo Baby Carrier, Inc.* v. *BOBA Inc.*, Case No. 2:15-cv-08946, In the United States District Court for the Central District of California, Jul. 15, 2016, 4 pgs.
Appendix LLL: Consumer Reports Guide to Baby Products by Sandy Jones, published in 2001 ("Guide to Baby Products") Invalidity Chart, *The Ergo Baby Carrier, Inc.* v. *BOBA Inc.*, Case No.

(56) **References Cited**

OTHER PUBLICATIONS

2:15-cv-08946, In the United States District Court for the Central District of California, Jul. 15, 2016, 8 pgs.
Appendix M: Kwik Sew Pattern No. 1046 ("Kwik Sew") Invalidity Chart, *The Ergo Baby Carrier, Inc.* v. *BOBA Inc.*, Case No. 2:15-cv-08946, In the United States District Court for the Central District of California, Jul. 15, 2016, 18 pgs.
Appendix MM: Baby Matey Literature as Cited on the Face of U.S. Pat. No. 4,986,458 ("Baby Matey Literature") Invalidity Chart, *The Ergo Baby Carrier, Inc.* v. *BOBA Inc.*, Case No. 2: 15-cv-08946, In the United States District Court for the Central District of California, Jul. 15, 2016, 20 pgs.
Appendix MMM: U.S. Pat. No. 3,780,919 ("Hansson") Invalidity Chart, *The Ergo Baby Carrier, Inc.* v. *BOBA Inc.*, Case No. 2:15-cv-08946, In the United States District Court for the Central District of California, Jul. 15, 2016, 2 pgs.
Appendix N: Japanese Pub. No. S53-155443 ("The '443 Patent") Invalidity Chart, *The Ergo Baby Carrier, Inc.* v. *BOBA Inc.*, Case No. 2: 15-cv-08946, In the United States District Court for the Central District of California, Jul. 15, 2016, 12 pgs.
Appendix NN: Baby Matey System Invalidity Chart, *The Ergo Baby Carrier, Inc.* v. *BOBA Inc.*, Case No. 2: 15- cv-08946, In the United States District Court for the Central District of California, Jul. 15, 2016, 22 pgs.
Appendix NNN: "Physiological Strain Due to Load Carrying" by Michael Holewijn, published in European Journal of Applied Physiology and Occupational Physiology, Feb. 1990 ("Holewijn") Invalidity Chart, *The Ergo Baby Carrier, Inc.* v. *BOBA Inc.*, Case No. 2:15-cv-08946, In the United States District Court for the Central District of California, Jul. 15, 2016, 11 pgs.
Appendix O: Japanese Patent Pub. No. S54-108131 ("The '131 Patent") Invalidity Chart, *The Ergo Baby Carrier, Inc.* v. *BOBA Inc.*, Case No. 2:15-cv-08946, In the United States District Court for the Central District of California, Jul. 15, 2016, 13 pgs.
http://www.weego.de/english/024.htm, Apr. 23, 2004, 1 page.
http://www.weego.de/english/design.htm, Mar. 24, 2004, 1 page.
http://www.weego.de/english/interaktiv.htm, Jul. 3, 2004, 1 page.
http://www.weego.de/english/ortho.htm, Jun. 1, 2004, 1 page.
Initial Determination on Violation of Section 337 and Recommended Determination on Remedy and Bond, In re Matter of Certain Child Carriers, United States International Trade Commission, Inv. No. 337-TA-1154, Mar. 10, 2020, 210 pgs.
International Preliminary Report on Patentability (Ch. 1) for International Application No. PCT/US2019/063052, dated May 25, 2021, 4 pgs.
International Preliminary Report on Patentability (Ch. I) for International Patent Application No. PCT/US2014/026378, dated Sep. 15, 2015, 6 pgs.
International Preliminary Report on Patentability (IPRP) for International Application No. PCT/US2017/058820, dated May 9, 2019, 11 pgs.
International Preliminary Report on Patentability (IPRP) for International Patent Application No. PCT /US2017 /058820, dated May 9, 2019, 11 pgs.
International Preliminary Report on Patentability (IPRP) issued for International Application No. PCT/US2017/058820, dated May 9, 2019, 11 pages.
International Preliminary Report on Patentability and Written Opinion for PCT/US2016/59534, dated May 1, 2018, 6 pgs.
International Preliminary Report on Patentability for PCT /US2004/029614, dated Mar. 13, 2006, 7 pgs.
International Search Report and Written Opinion for International Application No. PCT/US2014/026378, dated Jul. 21, 2014, 10 pgs.
Office Action for U.S. Appl. No. 14/685,235, dated May 22, 2015, 8 pgs.
International Search Report and Written Opinion for International Patent Application No. PCT/US17/58820, dated Jan. 5, 2018, 12 pgs.
International Search Report and Written Opinion for International Patent Application No. PCT/US19/063052, 11 pgs.
International Search Report and Written Opinion for International Patent Application No. PCT/US2016/026626, dated Jun. 30, 2016, 7 pgs.
International Search Report and Written Opinion for International Patent Application No. PCT/US2016/059534, dated Jan. 3, 2017, 8 pgs.
International Search Report and Written Opinion for PCT Application No. PCT /US2004/029614, completed on Feb. 11, 2005, dated Mar. 3, 2005, 9 pgs.
Joint Motion to Terminate for Inter Partes Review of U.S. Pat. No. 9,022,260 (IPR2016-01870) and U.S. Pat. No. 8,590,757 (IPR2016-01866), 3 pgs.
Jones et al., "Guide to Baby Products," Consumer Reports Books, Fourth Edition, Dec. 1995, 10 pgs.
Jones, S., "Guide to Baby Products," Consumer Reports, Completely Revised Seventh Edition, 2001, 21 pgs.
Jones, Sandy, Back Packs and Soft Carriers, Guide to Baby Products, Consumers Digest, 1998, Ch. 4, pp. 33-40.
Jones, Sandy, Back Packs and Soft Carriers, Guide to Baby Products, Consumers Reports, 1991, pp. 9-15.
Jones, Sandy, Getting Around, Guide to Baby Products, Consumers Digest, 2001, pp. 41, 55-60, 157-160, 199-201.
King, F.H, "Farmers of forty Centuries," Copyright 2002 Blackmask Online, www.blackmask.com, 118 pgs.
Kirkilionis, E., Das Tragen des Siiuglings im Hiiftsitz—eine spezielle Anpassung des menschlichen Traglings. Zoologische Jahrbiicher, 1992, 96 (3), 395-415.
Kirkilionis, E., Die Grundbediirfnisse des Sauglings und deren medizinische Aspekte—<largestellt und charakterisiert am Jungentypus Tragling. notabene medici, 1997, 27 (2), 61-66, 27 (3), 117-121.
Kirkilionis, E., Ein Baby will gatragen sein, 1999, 171 pgs.
Kirkilionis, E., Worauf Eltern beim Kauf von Tragehilfen fiir Sauglinge achten sollten, 1994.
Knapik, J., "Physiological, Biomechanical and Medical Aspects of Soldier Load Carriage", RTO HFM Specialist Meeting on Soldier Mobility Innovation in Load Carriage System Design and Evaluation, Kingston, CA, Jun. 27-29, 2000, 20 pgs.
Korean Patent Application No. 10-2019-7015083, Notice of Allowance, dated Oct. 25, 2022.
KR Application No. 10-2019-7015083 Korean Office Action dated Apr. 28, 2022.
Krantz, L. and Ludman-Exley, S., "The Best of Everything for Your Baby," Copyright 2000 by Prentice Hall, Inc., 18 pages.
Laury, Jean Ray, Baby Carrier, A Treasury of Needlecraft Gifts for the New Baby, 1976, pp. 90-93.
Leveau, Barney F., et al., "Developmental biomechanics," Physical Therapy, 64.12, 1984:1878.
Longe, J., "How Products are Made: An Illustrated Guide to Product Manufacturing," 2001, vol. 6, 8 pgs.
Longe, Jaqueline L., Baby Carrier, How Products are Made: An Illustrated Guide to Product Manufacturing, 2001, vol. 6, pp. 22-26.
Mackie, H.W. et al, "The effect of simulated school load carriage configurations on shoulder strap tension forces and shoulder interface pressure", Applied Ergonomics, 36, 2005, pp. 199-206.
Martin, et al., "A Mathematical Model of the Inertial Properties of a Carrier-Backpack System vol. IV", United States Army Natick, Research and Development Laboratories, Natick, MA, May 1982, 89 pgs.
Martin, et al., "Effects of Gender, Load, and Backpack on the Temporal and Kinematic Characteristics of Walking Gait vol. III", United States Army Natick, Research and Development Laboratories, Natick, MA, Apr. 1982, 77 pgs.
Martin, J. and Hooper, R., "Military Load Carriage: A Novel Method of Interface Pressure Analysis," RTO HFM Specialists' Meeting on "Soldier Mobility: Innovations in Load Carriage System Design and Evaluation," Jun. 27-29, 2000, 9 pgs.
Moriguchi Yuko, JP-2014176494A, Google translation, dated Sep. 2014, 14 pgs.
Nelson, et al., "Effects of Gender, Load, and Backpack on Easy Standing and Vertical Jump Performance vol. II", United States Army Natick, Research and Development Laboratories, Natick, MA, Mar. 1982, 77 pgs.

(56) **References Cited**

OTHER PUBLICATIONS

Newspaper ad for Napsak Soft Baby Carrier by Evenflow, The Pittsburgh Press (Pittsburgh, Pennsylvania), Thursday, Dec. 12, 1991, p. 57.
Notice of Allowance (with English translation) for Korean Patent Application No. 10-2018-7015023, dated Jul. 9, 2020, 10 pgs.
Notice of Allowance for Chinese Patent Application No. CN-201480023993.2, dated Mar. 5, 2018, 4 pages.
Notice of Allowance for Korean Patent Application No. KR 10-2015-7028949, dated Dec. 13, 2017, 5 pages.
Notice of Allowance for U.S. Appl. No. 15/337,813, dated Feb. 14, 2019, 2 pgs.
Notice of Allowance for U.S. Appl. No. 15/337,813, dated Jul. 1, 2019, 2 pgs.
Wilkinet-History of the Wilkinet Baby Carrier, http://www.wilkinet.co.uk/History.asp, Feb. 17, 2003, 3 pages.
Wilkinet-Instructional Videos, http://www.wilkinet.co.uk/Videos.asp, Feb. 18, 2003, 2 pages.
Wilkinet-Reviews and Testimonials, http://www.wilkinet.co.uk/ReviewsParents.asp, Feb. 18, 2003, 2 pages.
Wilkinet-Reviews and Testimonials, http://www.wilkinet.co.uk/ReviewsPress.asp, Feb. 18, 2003, 2 pages.
Wormleighton, A., "Baby Gifts: To Sew, Applique, Crochet and Knit," Copyrioht Marshall Cavendish Limited, 1998, 13 pages.
Wrapping instructions Baby Carriers, http://www.kokadi.de/en/instruction:_: 162.html, Copyright 2016 IS ARA, 28 pages.
Exhibit RX-0343, In re Matter of Certain Child Carriers, United States International Trade Connnission, Inv. No. 337-TA-1154, Infantino Upscale Carrier Product Manual, 2016, 10 pgs.
Exhibit RX-0344, In re Matter of Certain Child Carriers, United States International Trade Commission, Inv. No. 337-TA-1154, Infantino Upscale Carrier Product Manual RX, 2016, 10 pgs.
Exhibit RX-0344, In re Matter of Certain Child Carriers, United States International Trade Connnission, Inv. No. 337-TA-1154, Infantino Upscale Carrier Product Manual RX, 2016, 10 pgs.
Exhibit RX-0347, In re Matter of Certain Child Carriers, United States International Trade Commission, Inv. No. 337-TA-1154, Infantino Go Forward Evolved Product Manual, 24 pgs.
Exhibit RX-0347, In re Matter of Certain Child Carriers, United States International Trade Connnission, Inv. No. 337-TA-1154, Infantino Go Forward Evolved Product Manual, 24 pgs.
Exhibit RX-0351, In re Matter of Certain Child Carriers, United States International Trade Commission, Inv. No. 337-TA-1154, Photograph of Michelle McEntire and Children, Feb. 17, 2008, 1 pg.
Exhibit RX-0351, In re Matter of Certain Child Carriers, United States International Trade Connnission, Inv. No. 337-TA-1154, Photograph of Michelle McEntire and Children, Feb. 17, 2008, 1 pg.
Exhibit RX-0402, In re Matter of Certain Child Carriers, United States International Trade Commission, Inv. No. 337-TA-1154, Web Archive Hibiscus Baby Wearing Instructions, 2007, 3 pgs.
Exhibit RX-0402, In re Matter of Certain Child Carriers, United States International Trade Connnission, Inv. No. 337-TA-1154, Web Archive Hibiscus Baby Wearing Instructions, 2007, 3 pgs.
Exhibit RX-0411, In re Matter of Certain Child Carriers, United States International Trade Commission, Inv. No. 337-TA-1154, The Cat Bird Baby Website Printout-Dur Booth at the ABC Kids Expo in Las Vegas, Sep. 13, 2007, 5 pgs.
Exhibit RX-0411, In re Matter of Certain Child Carriers, United States International Trade Connnission, Inv. No. 337-TA-1154, The Cat Bird Baby Website Printout-Dur Booth at the ABC Kids Expo in Las Vegas, Sep. 13, 2007, 5 pgs.
Exhibit RX-0413, In re Matter of Certain Child Carriers, United States International Trade Commission, Inv. No. 337-TA-1154, The Cat Bird Baby Website Printout-Pikkolo, a Mei Tai-Like Buckle Carrier, Aug. 2, 2007, 5 pgs.
Exhibit RX-0413, In re Matter of Certain Child Carriers, United States International Trade Connnission, Inv. No. 337-TA-1154, The Cat Bird Baby Website Printout-Pikkolo, a Mei Tai-Like Buckle Carrier, Aug. 2, 2007, 5 pgs.
Exhibit RX-0415, In re Matter of Certain Child Carriers, United States International Trade Commission, Inv. No. 337-TA-1154, Pikkolo Carrier Design Drawings, Jul. 2007, 1 pg.
Exhibit RX-0415, In re Matter of Certain Child Carriers, United States International Trade Connnission, Inv. No. 337-TA-1154, Pikkolo Carrier Design Drawings, Jul. 2007, 1 pg.
Exhibit RX-0417, In re Matter of Certain Child Carriers, United States International Trade Commission, Inv. No. 337-TA-1154, Cat Bird Baby Purchase Order, Sep. 25, 2007, 1 pg.
Exhibit RX-0417, In re Matter of Certain Child Carriers, United States International Trade Connnission, Inv. No. 337-TA-1154, Cat Bird Baby Purchase Order, Sep. 25, 2007, 1 pg.
Exhibit RX-0419, In re Matter of Certain Child Carriers, United States International Trade Connnission, Inv. No. 337-TA-1154, Sales Receipt for Pikkolo Carrier, Sep. 14, 2007, 4 pgs.
Exhibit RX-0419, In re Matter of Certain Child Carriers, UnitedStates International Trade Commission, Inv. No. 337-TA-1154, Sales Receipt for Pikkolo Carrier, Sep. 14, 2007, 4 pgs.
Exhibit RX-0437, In re Matter of Certain Child Carriers, United States International Trade Commission, Inv. No. 337-TA-1154, FlickR Page Printout, Sep. 19, 2008, 2 pgs.
Exhibit RX-0437, In re Matter of Certain Child Carriers, United States International Trade Connnission, Inv. No. 337-TA-1154, FlickR Page Printout, Sep. 19, 2008, 2 pgs.
Exhibit RX-0480, In re Matter of Certain Child Carriers, United States International Trade Commission, Inv. No. 337-TA-1154, FlickR Photograph of Closet with Different Types of Material, Apr. 30, 2008, 3 pgs.
Exhibit RX-0480, In re Matter of Certain Child Carriers, United States International Trade Connnission, Inv. No. 337-TA-1154, FlickR Photograph of Closet with Different Types of Material, Apr. 30, 2008, 3 pgs.
Exhibit RX-0482, In re Matter of Certain Child Carriers, United States International Trade Commission, Inv. No. 337-TA-1154, FlickR Photograph of Closet with Different Types of Material, Apr. 30, 2008, 2 pgs.
Exhibit RX-0482, In re Matter of Certain Child Carriers, United States International Trade Connnission, Inv. No. 337-TA-1154, FlickR Photograph of Closet with Different Types of Material, Apr. 30, 2008, 2 pgs.
Exhibit RX-0484, In re Matter of Certain Child Carriers, United States International Trade Commission, Inv. No. 337-TA-1154, FlickR Photograph of crafting supplies, Apr. 30, 2008, 2 pgs.
Exhibit RX-0504, In re Matter of Certain Child Carriers, United States International Trade Commission, Inv. No. 337-TA-1154, Exhibit A to Declaration of Joline Sikora, Jul. 10, 2007, 1 pg.
Exhibit RX-0505, In re Matter of Certain Child Carriers, United States International Trade Commission, Inv. No. 337-TA-1154, Exhibit B to Declaration of Joline Sikora, Jul. 11, 2007, 3 pgs.
Exhibit RX-0506, In re Matter of Certain Child Carriers, United States International Trade Commission, Inv. No. 337-TA-1154, Exhibit C to Declaration of Joline Sikora, Jul. 11, 2007, 3 pgs.
Exhibit RX-0507, In re Matter of Certain Child Carriers, United States International Trade Commission, Inv. No. 337-TA-1154, Exhibit D to Declaration of Joline Sikora, Sep. 18, 2007, 1 pg.
Exhibit RX-0508, In re Matter of Certain Child Carriers, United States International Trade Commission, Inv. No. 337-TA-1154, Exhibit E to Declaration of Joline Sikora, Sep. 18, 2007, 1 pg.
Exhibit RX-0509, In re Matter of Certain Child Carriers, United States International Trade Commission, Inv. No. 337-TA-1154, Exhibit F to Declaration of Joline Sikora, Sep. 18, 2007, 1 pg.
Exhibit RX-0510, In re Matter of Certain Child Carriers, United States International Trade Commission, Inv. No. 337-TA-1154, Exhibit G to Declaration of Joline Sikora, Sep. 18, 2007, 1 pg.
Exhibit RX-0512, In re Matter of Certain Child Carriers, United States International Trade Commission, Inv. No. 337-TA-1154, Exhibit I to Declaration of Joline Sikora, 2007), 3 pgs.
Exhibit RX-0513, In re Matter of Certain Child Carriers, United States International Trade Commission, Inv. No. 337-TA-1154.
Exhibit RX-0513, In re Matter of Certain Child Carriers, United States International Trade Commission, Inv. No. 337-TA-1154, Exhibit J to Declaration of Joline Sikora, 1 pg.

(56) **References Cited**

OTHER PUBLICATIONS

Exhibit RX-0514, In re Matter of Certain Child Carriers, United States International Trade Commission, Inv. No. 337-TA-1154.
Exhibit RX-0514, In re Matter of Certain Child Carriers, United States International Trade Commission, Inv. No. 337-TA-1154, Exhibit K to Declaration of Joline Sikora, 2007, 1 pg.
Exhibit RX-0515, In re Matter of Certain Child Carriers, United States International Trade Commission, Inv. No. 337-TA-1154.
Exhibit RX-0515, In re Matter of Certain Child Carriers, United States International Trade Commission, Inv. No. 337-TA-1154, Exhibit L to Declaration of Joline Sikora, Feb. 17, 2008, 4 pgs.
Exhibit RX-0520, In re Matter of Certain Child Carriers, United States International Trade Commission, Inv. No. 337-TA-1154.
Exhibit RX-0520, In re Matter of Certain Child Carriers, United States International Trade Commission, Inv. No. 337-TA-1154, Exhibit Q to Declaration of Joline Sikora, Aug. 23, 2007, 2 pgs.
Exhibit RX-0521, In re Matter of Certain Child Carriers, United States International Trade Commission, Inv. No. 337-TA-1154.
Exhibit RX-0521, In re Matter of Certain Child Carriers, United States International Trade Commission, Inv. No. 337-TA-1154, Exhibit R to Declaration of Joline Sikora, Aug. 23, 2007, 2 pgs.
Exhibit RX-0522, In re Matter of Certain Child Carriers, United States International Trade Commission, Inv. No. 337-TA-1154.
Exhibit RX-0522, In re Matter of Certain Child Carriers, United States International Trade Commission, Inv. No. 337-TA-1154, Exhibit S to Declaration of Joline Sikora, Feb. 17, 2008, 2 pgs.
Exhibit RX-0523, In re Matter of Certain Child Carriers, United States International Trade Commission, Inv. No. 337-TA-1154.
Exhibit RX-0523, In re Matter of Certain Child Carriers, United States International Trade Commission, Inv. No. 337-TA-1154, Exhibit T to Declaration of Joline Sikora, Feb. 17, 2008, 2 pgs.
Exhibit RX-0524, In re Matter of Certain Child Carriers, United States International Trade Commission, Inv. No. 337-TA-1154.
Exhibit RX-0524, In re Matter of Certain Child Carriers, United States International Trade Commission, Inv. No. 337-TA-1154, Exhibit U to Declaration of Joline Sikora, Feb. 17, 2008, 2 pgs.
Byrnes, E.A., "A Blue-Jean 'Person Pack': Toting the Tot on the Trail", The Mother Earth News, No. 75, May/Jun. 1982, p. 164.
Casses, R., "Infant Carriers and Spinal Stress," http://continuumconcept.org/reading/spinalstress.html, Jun. 16, 2002, 3 pages.
Certified Translation of "What parents should watch out for when buying babywearing carriers" by Kirkiliones, retrieved from http://web.archive.org/web/20010719033I 13/http://www.continuum-concept.de/liedkir.htm).
Cessnock Eagle and South Mattland Recorder, vol. 32, No. 4162,Jun. 22, 1944, National library of Australia—http://nla.gov.au/ nla-news-pageI0625124, 1 page.
Chancellor, N., "It's a Shoulder Style," The Sydney Morning Herald, https://www.newspapers.com/image/123869066, Jun. 24, 1947, 1 page.
Chinese Patent Application No. 201780075232.5, Office Action dated May 10, 2022.
Coff, H., "Cut Scheduling for Optimum Fabric Utilization in Apparel Production," Georgia Institute of Technology, Nov. 1976, 141 pages.
Commission Investigative Staff's Initial Post-Hearing Brief, In re Matter of Certain Child Carriers, United States International Trade Commission, Inv. No. 337-TA-1154, Jan. 13, 2020, 124 pgs.
Commission Investigative Staff's Pre-Hearing Brief, In re Matter of Certain Child Carriers, United States International Trade Commission, Inv. No. 337-TA-1154, Nov. 20, 2019, 195 pgs.
Commission Investigative Staff's Reply Post-Hearing Brief, In re Matter of Certain Child Carriers, United States International Trade Commission, Inv. No. 337-TA-1154, Jan. 22, 2020, 26 pgs.
Complainant's Post-Hearing Initial Brief, In re Matter of Certain Child Carriers, United States International Trade Commission, Inv. No. 337-TA-1154, Jan. 6, 2020, 147 pgs.
Complainant's Post-Hearing Responsive Brief, In re Matter of Certain Child Carriers, United States International Trade Commission, Inv. No. 337-TA-1154, Jan. 17, 2020, 85 pgs.
Complainant's Pre-Hearing Brief, In re Matter of Certain Child Carriers, United States International Trade Commission, Inv. No. 337-TA-1154, Nov. 21, 2019, 852 pgs.
Complaint, *The Ergo Baby Carrier, Inc.* v. *BOBA Inc.*, Case No. 2:15-cv-08946, In the United States District Court for the Central District of California, filed Nov. 17, 2015, 7 pgs.
Constance, M., "Backpacking the Baby," The Sydney Morning Herald, https://www.newspapers.com/image/120542968, Dec. 1, 1988, 1 page.
Constance, S., "Backpacking the Baby" Sydney Morning Herald, Dec. 1, 1998, 3 pages.
Corrected Notice of Allowability for U.S. Appl. No. 15/796,422, dated May 30, 2019, 6 pgs.
Declaration of Judy Pettersen and Exhibits thereto, Aug. 14, 2016, 50 pgs.
Declaration of Judy Pettersen regarding BabyTrekker, May 26, 2011, 18 pgs.
Declaration of Judy Petterson regarding BabyTrekker with enclosures 1 and 2, dated May 26, 2011, 18 pgs.
Declaration of Richard N. Hinrichs, Ph.D and Appendix A thereto for Petition for Inter Partes Review of U.S. Pat. No. 8,590,757, 155 pgs.
Declaration of Richard N. Hinrichs, Ph.D and Appendix A thereto for Petition for Inter Partes Review of U.S. Pat. No. 9,022,260, 158 pgs.
Declaration of Richcard N. Hinrichs, Ph.D and Appendix A thereto for Petition for Inter Partes Review of U.S. Pat. No. 8,590,757, 155 pgs.
Declaration of Shari Hall White and Appendix A thereto, Jun. 29, 2016, 12 pgs.
Definition of "flexed", Random House Webster's Unabridged Dictionary, Oct. 1999, Second Edition, p. 733.
Doan, Marlyn, Children's Gear, Staffing Small in the Wilderness, The Sierra Club Outdoors Guide for Families, 1979, at pp. 161-167.
European Search Report for European Application No. 14773586.4, dated Oct. 16, 2016, 9 pgs.
European Search Report for European Patent Application No. 16777348.0, dated Oct. 4, 2018, 10 pgs.
Evenflo Soft Carriers, 2 pgs., retrieved from https://web.archive.org/web/2001033108 II 13/http://www.evenflo .corn/ep/furniture/softcarrier.phtml.
Examination Report for European Application No. 04 783 725.7, dated Dec. 21, 2009, 5 pgs.
Examination Report for European Application No. 04 783 725.7, dated Jun. 1, 2010, 6 pgs.
Examination Report for European Application No. 04 783 725.7, dated Sep. 10, 2009, 3 pgs.
Examination Report for European Application No. 04 783 725.7, dated Sep. 21, 2007, 3 pgs.
Examination Report for European Application No. 04 783 725.7, dated Sep. 9, 2008, 4 pgs.
Examination Report issued for European Patent Application No. 17864576.8, dated Nov. 16, 2020, 5 pgs.
Examination Report issued for European Patent Application No. FR 2 524 288 Oct. 1983 17864576.8, dated Nov. 16, 2020, 5 pgs.
Exhibit A to Declaration of Joline Sikora, Jul. 10, 2007, 1 pg.
Exhibit J to Declaration of Joline Sikora, 1 pg.
Exhibit K to Declaration of Joline Sikora, 2007, 1 pg.
Exhibit L to Declaration of Joline Sikora, Feb. 17, 2008, 4 pgs.
Exhibit Q to Declaration of Joline Sikora, Aug. 23, 2007, 2 pgs.
Exhibit R to Declaration of Joline Sikora, Aug. 23, 2007, 2 pgs.
Exhibit RX-0116, In re Matter of Certain Child Carriers, United States International Trade Commission, Inv. No. 337-TA-1154, Photographs Embedded in McKibbon Declaration, Exhibit 3 to Depo of McKibbon, 2 pgs.
Exhibit RX-0118, In re Matter of Certain Child Carriers, United States International Trade Commission, Inv. No. 337-TA-1154, Photographs Embedded in McKibbon Declaration, Exhibit 4 to Depo of McKibbon, 1 pg.
Exhibit RX-0120, In re Matter of Certain Child Carriers, United States International Trade Commission, Inv. No. 337-TA-1154, Flickr Photos of Petals and Puddles, Exhibit 5 to Depo of McKibbon, 3 pgs.

(56) **References Cited**

OTHER PUBLICATIONS

Exhibit RX-0123, In re Matter of Certain Child Carriers, United States International Trade Commission, Inv. No. 337-TA-1154: Photo of carrier, Exhibit 7 to Depo of McKibbon, 1 pg.
Exhibit RX-0133, In re Matter of Certain Child Carriers, United States International Trade Commission, Inv. No. 337-TA-1154, Etsy Pages for petalsandpuddles, Exhibit 82 to Depo of Wick, 4 pgs.
Exhibit RX-0135, In re Matter of Certain Child Carriers, United States International Trade Commission, Inv. No. 337-TA-1154, Wayback Machine Page for Etsy search results baby sling, Exhibit 83 to Depo of Wick, Aug. 19, 2010, 4 pgs.
Exhibit RX-0135, In re Matter of Certain Child Carriers, United States International Trade Connnission, Inv. No. 337-TA-1154, Wayback Machine Page for Etsy search results baby sling, Exhibit 83 to Depo of Wick, Aug. 19, 2010, 4 pgs.
Exhibit RX-0159, In re Matter of Certain Child Carriers, United States International Trade Commission, Inv. No. 337-TA-1154, Ergobaby Omni 360 Cool Air Mesh Instruction Manual, 26 pgs.
Notice of Allowance for U.S. Appl. No. 15/337,813, dated Nov. 5, 2018, 2 pgs.
Notice of Allowance for U.S. Appl. No. 15/796,422, dated Apr. 20, 2020, 4 pgs.
Notice of Allowance for U.S. Appl. No. 15/796,422, dated Jul. 25, 2019, 5 pgs.
Notice of Allowance for U.S. Appl. No. 15/796,422, dated Mar. 27, 2019, 7 pgs.
Notice of Allowance for U.S. Appl. No. 15/916,990, dated Aug. 15, 2018, 5 pgs.
Notice of Allowance for U.S. Appl. No. 15/916,990, dated Nov. 9, 2018, 2 pgs.
Notice of Allowance for U.S. Appl. No. 16/204,581, dated Aug. 19, 2019, 5 pgs.
Notice of Allowance for U.S. Appl. No. 16/204,581, dated Oct. 9, 2019, 3 pgs.
Notice of Allowance for U.S. Appl. No. 16/551,286, dated Aug. 18, 2020, 2 pgs.
Notice of Allowance for U.S. Appl. No. 16/551,286, dated Jan. 19, 2021, 2 pgs.
Notice of Allowance for U.S. Appl. No. 16/682,288, dated Apr. 26, 2021, 3 pgs.
Notice of Allowance for U.S. Appl. No. 16/682,288, dated Mar. 2, 2021, 3 pgs.
Notice of Allowance for U.S. Appl. No. 16/694,641, dated Sep. 7, 2021, 2 pgs.
Notice of Allowance issued for U.S. Appl. No. 15/170,629, dated Feb. 1, 2017, 5 pages.
Notice of Allowance issued for U.S. Appl. No. 15/170,629, dated Oct. 28, 2016, 3 pages.
Notice of Allowance issued for U.S. Appl. No. 15/602,744, dated Dec. 8, 2017, 2 pages.
Notice of Allowance with English translation for Korean Patent Application No. 10-2020-7029046, dated Aug. 5, 2021, 8 pgs.
Notice of Commission Determination to Review in Part a Final Initial Determination Finding No Violation of Section 337; Termination of the Investigation, 85 Federal Register 95, at 29484-29485, May 15, 2020, 2 pgs.
Notice of Opposition filed on Mar. 13, 2012, against European Patent No. EPI 765123 BI, 213 pgs.
Nov. 24, 1998 Letter from U.S. ITC regarding U.S. tariff classification of babyTrekker, 2 pgs., retrieved from http://www.faqs.org.rulings/rulings1998NYD83381.htrnl.
O'Donohue, Rosaleen, Baby Rides the Asian Way, The Australian Women's Weekly, Jul. 23, 1969 at p. 9.
Office Action (with English translation) for Chinese Patent Appli—EP 1765123 Jun. 2011 cation No. 201680071536.X, dated Nov. 16, 2020, 16 pgs.
Office Action (with English translation) for Chinese Patent Application No. 201680071536.X, dated Nov. 16, 2020, 16 pgs.
Office Action (with English translation) for Korean Patent Application No. 10-2018-7015023, dated Dec. 17, 2019, 10 pgs.
Office Action (with English translation) for Korean Patent Application No. 10-2020-7029046, dated Oct. 22, 2020, 11 pgs.
Office Action for Chinese Patent Application No. 201480023993.2, dated Jan. 11, 2017, 20 pgs.
Office Action for Chinese Patent Application No. 201480023993.2, dated Sep. 26, 2017, 5 pages.
Office Action for European Patent Application No. 14773586.4, dated Oct. 12, 2017, 5 pages.
Office Action for Japanese Patent Application No. 2016-502118, dated Apr. 7, 2017, 9 pages.
Office Action for Japanese Patent Application No. 2017-552901 with English translation), dated Feb. 19, 2019, 9 pgs.
Office Action for Japanese Patent Application No. 2018-521974 dated Aug. 14, 2020, 2 pgs.
Office Action for Japanese Patent Application No. 2020-060090, dated Feb. 19, 2021, 1 pg.
Office Action for Korean Patent Application No. 10-2015-7028949, dated Jul. 20, 2017, 20 pages.
Office Action for Korean Patent Application No. 10-2018-7015023, dated Dec. 17, 2019, 5 pgs.
Office Action for U.S. Appl. No. 10/937,193, dated Aug. 14, 2007,9 pgs.
Office Action for U.S. Appl. No. 11/949,324, dated Apr. 28, 2010, 9 pgs.
Office Action for U.S. Appl. No. 11/949,324, dated Jul. 18, 2011, 14 pgs.
Office Action for U.S. Appl. No. 11/949,324, dated Oct. 4, 2010, 10 pgs.
Office Action for U.S. Appl. No. 11/949,324, dated Oct. 6, 2009, 9 pgs.
Office Action for U.S. Appl. No. 14/685,235, dated May 22, 2015, 8 pgs.
Office Action for U.S. Appl. No. 14/685,235, dated Nov. 27, 2015, 8 pgs.
Office Action for U.S. Appl. No. 14/862,933, dated Oct. 30, 2015, 5 pgs.
Office Action for U.S. Appl. No. 15/094,515, dated Feb. 19, 2019, 15 pgs.
Office Action for U.S. Appl. No. 15/094,515, dated Jun. 28, 2018, 15 pgs.
Office Action for U.S. Appl. No. 15/177,114, dated Aug. 24, 2016, 10 pgs.
Office Action for U.S. Appl. No. 15/177,114, dated Feb. 21, 2018, 13 pages.
Office Action for U.S. Appl. No. 15/177,114, dated May 30, 2018, 5 pgs.
Office Action for U.S. Appl. No. 15/177,114, dated May 31, 2017, 12 pages.
Office Action for U.S. Appl. No. 15/177,114, dated Nov. 3, 2017, 12 pages.
Office Action for U.S. Appl. No. 15/177,114, dated Oct. 3, 2017, 5 pages.
" Blowing Experience," The Australian Women's Weekly, National library of Australia http://nla.gov.au/nla-newspage5623014, Oct. 11, 1978, 1 page.
"6 in One Rider," Infantino, LLC, San Diego, California, 2002, 1 page.
"Baby Matey, Soft Baby Carriers," Copyright Kidpower Unlimited Inc., 4 pgs.
"Baby Pack Baby Carrier," http://www.beginnings.org/shop/buikrugdragers_babypack.htm, Feb. 4, 2002, 1 page.
"Baby Trekker instruction Sheet," 2 pages.
"Baby/Toddler Sling," http://www3.telus.net/public/a6a83106/Sling/sling.htmL, Nov. 19, 2003, 5 pages.
"Backpack Tips," http://backpacking.net/ gearpack-tips.html, Jun. 2, 2002, 6 pages.
"Chinese Baby Carrier," http://portebebe.free.fr, Jun. 2002, 7 pgs.
"Clinical Practice Guideline: Early Detection of Developmental Dysplasia of the Hip," American Academy of Pediatrics vol. 105, No. 4, Apr. 2000, 10 pgs.
"Device for Worn Baby," Patent Translate Description of Russian Application No. RU12646, 3 pgs.

(56) **References Cited**

OTHER PUBLICATIONS

"Eager Market for Baby Carrier" The Gazette, Montreal May 15, 1984: C-19 (accessed at https://news.google.com/newspapersid~zA0vAAAAIBAJ&sjid~mqUFAAAAIBAJ&pg~I454% 2C24685 I 0).
"First Journey Advantages," http://www.first-journey.com/advantagelpics/advantages1.html, Dec. 14, 2002, 1 page.
"First Journey Advantages," http://www.first-journey.com/advantagelpics/advantages2.html, Dec. 14, 2002, 1 page.
"First Journey Advantages," http://www.first-journey.com/advantagelpics/advantagesl.html, Dec. 14, 2002, 1 page.
"First Journey Instructions," http://www.first-journey.com/instructions/instructions, Dec. 14, 2002, 1 page.
"First Journey Photos & Quotes," http://www.first-journey.com/photosandquotes/photos, Dec. 14, 2002, 2 page.
"First Journey Tour Guide," Pettersen Infant Products, www.firstjourney.com, 2002, 2 pgs.
"First Journey Visite Guidee," Pettersen Infant Products, www.firstjourney.com, 2004, 2 pgs.
"For Shane Gould Innes-Motherhood is a Mind," The Australian Women's Weekly, National library of Australia—http://nla.gov.au/nla-news-page5623013, Oct. 11, 1978, 1 page.
"Graco Soft Carrier Owner's Manual, Model 5070 Series," Graco Children's Products, Inc., 1999, 7 pages.
"GYP Gear G4," http://www.gvogear.com/g4.asp, Jun. 2, 2002, 3 pages.
"Home Watch," The Sydney Morning Herald, https://www.newspapers.com/image/123957115, Jan. 10, 1993, 1 page.
"In & Out Carrier Instructions," Hauck Fun for Kids, Aug. 2003, 3 pages.
"Kinderpack Wearing Instructions for Infant Size," https://mykinderpack.com/pages/instructions, Copyright 2017 Kindercarry, 5 pgs.
"Kwik Sew," Pattern 1046, Kwik Sew Pattern Co., Inc., Minneapolis, MN, 8 pgs.
"Lifter Baby Carrier," http://www.beginnings.org/shop/buikheuprugdragers_lifter.htm, Jun. 19, 2002, 2 pgs.
"Make Your Own G4 Pack," http://www.gvpgear.com/make_your_own.asp, Jun. 2, 2002, 17 pgs.
"Miguel Inspired Originals," http://miguelinspired.com/ gpage2.html, Oct. 30, 2005, 5 pgs.
"Miguel Inspired Originals," http://miguelinspired.com/about.html, Oct. 30, 2005, 2 pages.
"Miguel Inspired Originals," http://miguelinspired.com/gpage.html, Oct. 30, 2005, 2 pgs.
"Miguel Inspired Originals," http://miguelinspired.com/gpage2.html, Oct. 30, 2005, 5 pages.
"Miguel Inspired Originals," http://miguelinspired.com/gpage3.html, Oct. 30, 2005, 1 page.
"Porte-hebe chinois," http://portebebe.free.fr/, Jun. 5, 2002, 6 pages.
"The Australian Women's Weekly," vol. 37, No. 8, Jul. 23, 1969, 80 pgs.
"The Baby Trekker Product Info," http://www.babytrekker.com/product.htm, Jun. 10, 2002, 1 page.
"The Baby Trekker Testimonials," http://www.babytrekker.com/testimonials.htm, Dec. 21, 2001, 4 pgs.
"The Baby Trekker Testimonials," http://www.babytrekker.com/testimonials.htm, Sep. 16, 2002, 4 pgs.
"The Five Hidden Features of the Yemaya Baby Carrier," <>, Oct. 13, 2016 ISARA, 7 pgs.
"The Five Hidden Features of the Yemaya Baby Carrier," http://http://blog.cybex-online.com/blog/safety/the-five-hidden-featuresof-the-yemaya-baby-carrier/, Oct. 13, 2016 ISARA, 7 pages.
"The Pick of the Extended Trek Packs" Backpacker, Oct. 1997, vol. 23, pp. 58-69.
"Theodore Bean Infants & Toddlers Carriers & Accessories," Theodore Bean Adventure Company Inc., 2000, 16 pages.
"Ultralight Pack,"http://www.backpacking.net/makegear/ gvppack/, Mar. 1, 2003, 29 pgs.
"Wearing Your Baby," http://wearingyourbaby.co.nz/history, 2014, 11 pages.
"Why Choose the Wilkin et?," http://www.wilkinet.co.uk/WhyChoose.asp, Apr. 17, 2003, 2 pages.
"Worauf Eitern beim Kauf von Tragehilfen fuer Sauglinge achten sollten"—Things parents shopping for infant carriers should look out for, http://www.continuum-concept.de/liedkir.htm, Jul. 19, 2001, 4 pages.
Appendix A: Baby Matey Non-Patent Literature as Cited on the Face of U.S. Pat. No. 4,986,458 ("Baby Matey Literature") Invalidity Chart, *The Ergo Baby Carrier, Inc.* v. *BOBA Inc.*, Case No. 2:15-cv-08946, In the United States District Court for the Central District of California, Jul. 15, 2016, 21 pgs.
Appendix AAA: Japanese Pub. No. S54-108131 ("The '131 Patent") Invalidity Chart, *The Ergo Baby Carrier, Inc.* v. *BOBA Inc.*, Case No. 2: 15-cv-08946, In the United States District Court for the Central District of California, Jul. 15, 2016, 11 pgs.
Appendix B: Baby Matey System Invalidity Chart, *The Ergo Baby Carrier, Inc.* v. *BOBA Inc.*, Case No. 2: 15-cv-08946, In the United States District Court for the Central District of California, Jul. 15, 2016, 22 pgs.
Appendix OO: Canadian Patent No. 1332928 ("Pettersen") Invalidity Chart, *The Ergo Baby Carrier, Inc.* v. *BOBA Inc.*, Case No. 2:15-cv-08946, In the United States District Court for the Central District of California, Jul. 15, 2016, 16 pgs.
Appendix OOO: Kelty Kangaroo Invalidity Chart, *The Ergo Baby Carrier, Inc.* v. *BOBA Inc.*, Case No. 2: 15-cv-08946, In the United States District Court for the Central District of California, Jul. 15, 2016, 4 pgs.
Appendix P: U.S. Pat. No. 4,009,808 ("Sharp") Invalidity Chart, *The Ergo Baby Carrier, Inc.* v. *BOBA Inc.*, Case No. 2:15-cv-08946, In the United States District Court for the Central District of California, Jul. 15, 2016, 5 pgs.
Appendix PP: babyTrekker Instruction Manual copyright date stamped 1998 ("1998 babyTrekker Manual") Invalidity Chart, *The Ergo Baby Carrier, Inc.* v. *BOBA Inc.*, Case No. 2: 15-cv-08946, In the United States District Court for the Central District of California, Jul. 15, 2016, 16 pgs.
Appendix PPP: Kirkiliones Invalidity Chart, *The Ergo Baby Carrier, Inc.* v. *BOBA Inc.*, Case No. 2:15-cv-08946, In the United States District Court for the Central District of California, Jul. 15, 2016, 9 pgs.
Appendix Q: UK Patent App. No. GB 2026848 ("David") Invalidity Chart, *The Ergo Baby Carrier, Inc.* v. *BOBA Inc.*, Case No. 2:15-cv-08946, In the United States District Court for the Central District of California, Jul. 15, 2016, 8 pgs.
Appendix QQ: babyTrekker Instruction Manual ("babyTrekker Manual") Invalidity Chart, *The Ergo Baby Carrier, Inc.* v. *BOBA Inc.*, Case No. 2: 15-cv-08946, In the United States District Court for the Central District of California, Jul. 15, 2016, 17 pgs.
Appendix QQQ: "Physiological, Biomechanical and Medical Aspects of Soldier Load Carriage" by Joseph Knapik, presented in Jun. 2000 ("Knapik") Invalidity Chart, *The Ergo Baby Carrier, Inc.* v. *BOBA Inc.*, Case No. 2: 15-cv-08946, In the United States District Court for the Central District of California, Jul. 15, 2016, 10 pgs.
Appendix R: DIY Baby Sling System Invalidity Chart, *The Ergo Baby Carrier, Inc.* v. *BOBA Inc.*, Case No. 2:15- cv-08946, In the United States District Court for the Central District of California, Jul. 15, 2016, 13 pgs.
Appendix RR: babyTrekker System Invalidity Chart, *The Ergo Baby Carrier, Inc.* v. *BOBA Inc.*, Case No. 2:15-cv-08946, In the United States District Court for the Central District of California, Jul. 15, 2016, 14 pgs.
Appendix RRR: U.S. Pat. No. 4,434,920 ("Moore") Invalidity Chart, *The Ergo Baby Carrier, Inc.* v. *BOBA Inc.*, Case No. 2: 15-cv-08946, In the United States District Court for the Central District of California, Jul. 15, 2016, 2 pgs.
Appendix S: Kozy System Invalidity Chart, *The Ergo Baby Carrier, Inc.* v. *BOBA Inc.*, Case No. 2:15-cv-08946, In the United States District Court for the Central District of California, Jul. 15, 2016, 18 pgs.
Appendix SS: First Journey System Invalidity Chart, *The Ergo Baby Carrier, Inc.* v. *BOBA Inc.*, Case No. 2:15-cv-08946, In the United States District Court for the Central District of California, Jul. 15, 2016, 18 pgs.

(56) **References Cited**

OTHER PUBLICATIONS

Appendix SSS: "A Static Biomechanical Load Carriage Model" by R.P. Pelot et al., Presented in Jun. 2000 ("Pelot") Invalidity Chart, *The Ergo Baby Carrier, Inc.* v. *BOBA Inc.*, Case No. 2: 15-cv-08946, In the United States District Court for the Central District of California, Jul. 15, 2016, 11 pgs.
Appendix T: Packababy System Invalidity Chart, *The Ergo Baby Carrier, Inc.* v. *BOBA Inc.*, Case No. 2:15-cv-08946, In the United States District Court for the Central District of California, Jul. 15, 2016, 19 pgs.
Appendix TT: French Patent Pub. No. 2794010 ("Ducruet") Invalidity Chart, *The Ergo Baby Carrier, Inc.* v. *BOBA Inc.*, Case No. 2: 15-cv-08946, In the United States District Court for the Central District of California, Jul. 15, 2016, 5 pgs.
Appendix TTT: Pony Ride Invalidity Chart, *The Ergo Baby Carrier, Inc.* v. *BOBA Inc.*, Case No. 2:15-cv-08946, In the United States District Court for the Central District of California, Jul. 15, 2016, 4 pgs.
Appendix TTT: Pony Ride Invalidity Chart, *The Ergo Baby Carrier, Inc.* v. *BOBA Inc.*, Case No. 2:15-cv-08946, In the United States District District of California, Jul. 15, 2016, 4 pgs.
Appendix U: Sakara System Invalidity Chart, *The Ergo Baby Carrier, Inc.* v. *BOBA Inc.*, Case No. 2:15-cv-08946, In the United States District Court for the Central District of California, Jul. 15, 2016, 18 pgs.
Appendix U: Sakara System Invalidity Chart, *The Ergo Baby Carrier, Inc.* v. *BOBA Inc.*, Case No. 2:15-cv-08946, In the UnitedStates District Court of the Central District of California, Jul. 15, 2016, 18 pgs.
Appendix UU: U.S. Pat. No. 4,986,458 ("Linday") Invalidity Chart, *The Ergo Baby Carrier, Inc.* v. *BOBA Inc.*, Case No. 2: 15-cv-08946 In the United States District Court for the Central District of California, Jul. 15, 2016, 15 pgs.
Appendix UUU: U.S. Pat. No. 5,114,059 ("Thatcher") Invalidity Chart, *The Ergo Baby Carrier, Inc.* v. *BOBA Inc.*, Case No. 2: 15-cv-08946, In the United States District Court for the Central District of California, Jul. 15, 2016, 3 pgs.
Appendix V: Sutemi System Invalidity Chart, *The Ergo Baby Carrier, Inc.* v. *BOBA Inc.*, Case No. 2:15-cv-08946, In the United States District Court for the Central District of California, Jul. 15, 2016, 14 pgs.
Appendix VV: U.S. Pat. No. 4,469,259 ("Krich") Invalidity Chart, *The Ergo Baby Carrier, Inc.* v. *BOBA Inc.*, Case No. 2: 15-cv-08946, In the United States District Court for the Central District of California, Jul. 15, 2016, 5 pgs.
Appendix VVV: Weego System Invalidity Chart, *The Ergo Baby Carrier, Inc.* v. *BOBA Inc.*, Case No. 2:15-cv-08946, In the United States District Court for the Central District of California, Jul. 15, 2016, 18 pgs.
Appendix W: Casses Invalidity Chart, *The Ergo Baby Carrier, Inc.* v. *BOBA Inc.*, Case No. 2: 15-cv-08946, In the United States District Court for the Central District of California, Jul. 15, 2016, 6 pgs.
Appendix WW: "A Blue-Jean Person Pack" by E.A. Byrnes as published on p. 164 of the May/Jun. 1982 issue of the Mother Earth News ("Byrnes") Invalidity Chart, *The Ergo Baby Carrier, Inc.* v. *BOBA Inc.*, Case No. 2:15-cv-08946, In the United States District Court for the Central District of California, Jul. 15, 2016, 17 pgs.
Appendix WWW: U.S. Pat. No. 6,257,468 ("Yamazoe") Invalidity Chart, *The Ergo Baby Carrier, Inc.* v. *BOBA Inc.*, Case No. 2: 15-cv-08946, In the United States District Court for the Central District of California, Jul. 15, 2016, 2 pgs.
Appendix X: U.S. Pat. No. 6,182,873 ("Christopher") Invalidity Chart, *The Ergo Baby Carrier, Inc.* v. *BOBA Inc.*, Case No. 2: 15-cv-08946, In the United States District Court for the Central District of California, Jul. 15, 2016, 4 pgs.
Appendix XX: EP Patent No. 0437365 ("Gunderman") Invalidity Chart, *The Ergo Baby Carrier, Inc.* v. *BOBA Inc.*, Case No. 2: 15-cv-08946, In the United States District Court for the Central District of California, Jul. 15, 2016, 14 pgs.
Appendix Y: U.S. Pat. No. 6,155,579 ("Eyman") Invalidity Chart, *The Ergo Baby Carrier, Inc.* v. *BOBA Inc.*, Case No. 2: 15-cv-08946, In the United States District Court for the Central District of California, Jul. 15, 2016, 4 pgs.
Appendix YY: K wik Sew Pattern No. 1046 ("K wik Sew") Invalidity Chart, *The Ergo Baby Carrier, Inc.* v. *BOBA Inc.*, Case No. 2:15-cv-08946, In the United States District Court for the Central District of California, Jul. 15, 2016, 16 pgs.
Appendix Z: U.S. Pat. No. 5,848,741 ("Fair") Invalidity Chart, *The Ergo Baby Carrier, Inc.* v. *BOBA Inc.*, Case No. 2: 15-cv-08946, In the United States District Court for the Central District of California, Jul. 15, 2016, 4 pgs.
Appendix ZZ: Japanese Patent Publication No. S53-155443 ("The '443 Patent") Invalidity Chart, *The Ergo Baby Carrier, Inc.* v. *BOBA Inc.*, Case No. 2: 15-cv-08946, in the United States District Court for the Central District of California, Jul. 15, 2016, 10 pgs.
Aronson, D.D et al., "Developmental dysplasia of the hip", Pediatrics, Aug. 1994, vol. 94(2), 202, 11 pgs.
Assorted Photos, U.S. Appl. No. 63/501,396, filed Sep. 10, 2003, 3 pages.
Baby Matey Soft Baby Carriers Literature, Kidpower Unlimited Inc., Toronto, ON, CA, 10 pgs.
Baby Trekker-Advantages, 2 pgs., retrieved from https://web.archive.org/web/20000708141511/http://www.babytrekker.com/ advantages.htrn.
BabyTrekker Instruction Manual, Pettersen Infant Products, Canada, 16 pages.
BabyTrekker Instruction Manual, Petterson Infant Products, Flin Flon, MB, CA, 1998, 16 pgs.
Bach, John, "Practical Inventor Influenced American Culture", University of Cincinnati UC Magazine, Aug. 2010, 6 pgs.
Blaffer Hardy, S., Family Planning Primate Style, Mother Nature—A History of Mothers, Infants and Natural Selection, 2000, pp. 197-204.
Blowing Experience, The Australian Women's Weekly, National library of Australia ~ http://nla.gov.au/nla-newspage56230I4, Oct. 11, 1978, 1 page.
BOBA, Inc.'s First Amended Counterclaims for Declaration of Unenforceability, Invalidity, and Monopolization, *The Ergo Baby Carrier, Inc.* v. *BOBA Inc.*, Case No. 2:15-cv-08946, in the United States District Court for the Central District of California, May 23, 2016, 73 pgs.
Brewer, Gail S., A Quick Guide for Starting Right, Baby Carriers, Right from the Start: Meeting the Challenges of Mothering Your Unborn and Newborn Baby, 1981, pp. 159-160.
Exhibit RX-0525, In re Matter of Certain Child Carriers, United States International Trade Commission, Inv. No. 337-TA-1154, Exhibit V to Declaration of Joline Sikora, Jul. 21, 2007-Sep. 19, 2008, 64 pgs.
Exhibit RX-0526, In re Matter of Certain Child Carriers, United States International Trade Commission, Inv. No. 337-TA-1154, Exhibit W to Declaration of Joline Sikora, Feb. 27, 2007-Apr. 5, 2009, 41 pgs.
Exhibit RX-0527, In re Matter of Certain Child Carriers, United States International Trade Commission, Inv. No. 337-TA-1154, Exhibit A to Declaration of Mischele McEntire, Feb. 17, 2007, 2 pgs.
Exhibit RX-0528, In re Matter of Certain Child Carriers, United States International Trade Commission, Inv. No. 337-TA-1154, Exhibit B to Declaration of Mischele McEntire, Feb. 17, 2008, 4 pgs.
Exhibit RX-0539, In re Matter of Certain Child Carriers, United States International Trade Commission, Inv. No. 337-TA-1154, LILLEbaby Complete 6 Position Baby Carrier User Manual, Exhibit 613 to Depo of L. Lehan, 16 pgs.
Exhibit RX-0551, In re Matter of Certain Child Carriers, United States International Trade Commission, Inv. No. 337-TA-1154, Silly Goose Photos and thread from babywearer.com, Sep. 14, 2007, 14 pgs.
Exhibit RX-0552, In re Matter of Certain Child Carriers, United States International Trade Commission, Inv. No. 337-TA-1154, Silly Goose Photos and thread from babywearer.com, Oct. 31, 2007, 15 pgs.

(56) **References Cited**

OTHER PUBLICATIONS

Exhibit S to Declaration of Joline Sikora, Feb. 17, 2008, 2 pgs.
Exhibit T to Declaration of Joline Sikora, Feb. 17, 2008, 2 pgs.
Exhibit U to Declaration of Joline Sikora, Feb. 17, 2008, 2 pgs.
Extended European Search Report for European Patent Application No. 16860977.4, dated Jun. 5, 2019, 7 pgs.
Extended European Search Report for European Patent Application No. 17864576.8, dated Feb. 14, 2020, 7 pgs.
Feb. 2002 forum post from "USA", 2 pgs., retrieved from http:// windsorpeak.corn/vbulletin/showthread.php?185 543-baby- bjorn-and- large-husband).
File History for European Patent Application No. 04783725.7, filed Sep. 10, 2004, 693 pages.
File History for U.S. Appl. No. 10/937,193, filed Sep. 9, 2004, 135 pages.
File History for U.S. Appl. No. 14/685,235, filed Apr. 13, 2015, 460 pages.
File History for U.S. Trademark U.S. Appl. No. 75/457,187, filed Mar. 25, 1998, 56 pages.
First Journey Brochure, www.first-journey.com, 2002, 2 pages.
Frame Carriers, 1 pg., retrieved from https://web.archive.org/web/ 200005 26184 53 5/http: /www.evenflo.corn/ep/furniture/framecarrier. phtrnl.
Gebrauchsanweisung (User's Manual), Weego Baby Carrier, 4 pages.
Gilligan, Shannon, Best for Baby: A Selective Consumer's Guide to Products and Services from Infancy to Preschool, 1988, pp. 41-46.
Guide to the Ann Moore Innovative Lives Presentation, 1999, Archives Center, National Museum of American History, Smithsonian Institute, Aug. 2010, 12 pgs., retrieved from http://amhistory.si.edu/ archives/ AC0706.pdf.
Harman et al., "The Effects of Backpack Weight on the Biomechanics of Load Carriage," Military Division, U.S. Army Research Institute of Environmental Medicine, May 3, 2000, 72 pages.
Hinrichs, et al., "An Investigation of the Inertial Properties of Backpacks Loaded in Various Configurations", United States Army Natick, Research and Development Laboratories, Natick, MA, 1982, 75 pgs.
Hodgson, A.R., "Congenital Dislocation of the Hip", British Medical Journal, Sep. 7, 1961, p. 647.
Holewijn, M., "Physiological Strain Due to Load Carrying", European Journal of Applied Physiology, 1990, 61:237-245.
Holewijn, Michael, "Physiological Strain Due to Load Carrying. "European Journal of Applied Physiology and Occupational Physiology, Feb. 1990, 10 pages.
http ://www.kelty.com/Kelty/index.cfm?fuseaction=Kids.ShowProduct &type=carrier&ID=I2, Aug. 5, 2002, 1 page.
http:/ /koti.welho.com/ skoivune/ sakara/ english/ about/ index. html, Apr. 30, 2003, 2 pages.
http:/ /koti.welho.com/skoivune/english/guide/ohje3.html, May 1, 2003, 1 page.
http:/ /koti.welho.com/skoivune/sakara/english/about/index.html, Apr. 30, 2003, 2 pgs.
http:/ /koti.welho.com/skoivune/sakara/english/guide/index.html, Jun. 28, 2003, 1 page.
http:/ /koti.welho.com/skoivune/sakara/english/guide/ohje2.html, May 1, 2003, 1 page.
http:/ /koti.welho.com/skoivune/sakara/english/guide/ohje3.html, May 1, 2003, 1 page.
http:/ /koti.welho.com/skoivune/sakara/english/order/index.html, Apr. 30, 2003, 1 page.
http:/ /koti.welho.corn/skoivune/sakara/english/index html, Jun. 24, 2003, 2 pages.
http://koti.welho.com/skoivune/sakara/index2.htrnl, Jun. 20, 2003, 2 pages.
http://koti.welho.com/skoivune/sakara/ohje/ohje4.htrnl, May 2, 2003, 1 page.
http://koti.welho.com/skoivune/sakara/ohje/ohje6.htrnl, May 29, 2003, 1 page.
http://koti.welho.com/skoivune/sakara/ohje/ohje7.html, May 9, 2003, 1 page.
http://koti.welho.com/skoivune/sakara/sakarat/index.html, Apr. 30, 2003, 2 pages.
http://koti.welho.corn/skoivune/sakara/ohje/ohje6.html, May 29, 2003, 1 page.
http://www.kelty.com/Kelty/index .cfm?fuseaction=Kids. ShowProduct &type=carrier&ID-12, Aug. 5, 2002, 1 page.
http://www.weego.com/acatalog/ool.html, Jun. 5, 2002, 3 pages.
http://www.weego.com/coinf.html, Aug. 6, 2002, 2 pages.
http://www.weego.com/fabric.html, Nov. 2, 2001, 2 pgs.
http://www.weego.com/preem.html, Aug. 6, 2002, 2 pages.
http://www.weego.com/product.html, Dec. 11, 2001, 1 page.
http://www.weego.de/ english/trageposition.htm, Apr. 23, 2004,1 page.
http://www.weego.de/024.htm, Aug. 12, 2003, 1 page.
Exhibit RX-0159, In re Matter of Certain Child Carriers, United States International Trade Connnission, Inv. No. 337-TA-1154, Ergobaby Omni 360 Cool Air Mesh Instruction Manual, 26 pgs.
Exhibit RX-0160, In re Matter of Certain Child Carriers, United States International Trade Commission, Inv. No. 337-TA-1154, Ergobaby Omni 360 Instruction Manual, 26 pgs.
Exhibit RX-0160, In re Matter of Certain Child Carriers, United States International Trade Connnission, Inv. No. 337-TA-1154, Ergobaby Omni 360 Instruction Manual, 26 pgs.
Exhibit RX-0161, In re Matter of Certain Child Carriers, United States International Trade Commission, Inv. No. 337-TA-1154, Ergobaby Adapt Instruction Manual, 23 pgs.
Exhibit RX-0161, In re Matter of Certain Child Carriers, United States International Trade Connnission, Inv. No. 337-TA-1154, Ergobaby Adapt Instruction Manual, 23 pgs.
Exhibit RX-0163, In re Matter of Certain Child Carriers, United States International Trade Commission, Inv. No. 337-TA-1154, Ergobaby 360 Bundle of Joy Instruction Manual, 26 pgs.
Exhibit RX-0163, In re Matter of Certain Child Carriers, United States International Trade Connnission, Inv. No. 337-TA-1154, Ergobaby 360 Bundle of Joy Instruction Manual, 26 pgs.
Exhibit RX-0200, In re Matter of Certain Child Carriers, United States International Trade Commission, Inv. No. 337-TA-1154, Declaration of Di Linh Reichman Regarding the Hibiscus Carrier, Sep. 2, 2019, 6 pgs.
Exhibit RX-0200, In re Matter of Certain Child Carriers, United States International Trade Connnission, Inv. No. 337-TA-1154, Declaration of Di Linh Reichman Regarding the Hibiscus Carrier, Sep. 2, 2019, 6 pgs.
Exhibit RX-0206, In re Matter of Certain Child Carriers, United States International Trade Commission, Inv. No. 337-TA-1154, Color Photograph (Respondent Exhibit), Exhibit 301 to Depo of Reichman, 1 pg.
Exhibit RX-0206, In re Matter of Certain Child Carriers, United States International Trade Connnission, Inv. No. 337-TA-1154, Color Photograph (Respondent Exhibit), Exhibit 301 to Depo of Reichman, 1 pg.
Exhibit RX-0208, In re Matter of Certain Child Carriers, United States International Trade Commission, Inv. No. 337-TA-1154, Color Photograph (Respondent Exhibit), Exhibit 302 to Depo of Reichman, 1 pg.
Exhibit RX-0208, In re Matter of Certain Child Carriers, United States International Trade Connnission, Inv. No. 337-TA-1154, Color Photograph (Respondent Exhibit), Exhibit 302 to Depo of Reichman, 1 pg.
Exhibit RX-0210, In re Matter of Certain Child Carriers, United States International Trade Commission, Inv. No. 337-TA-1154, Color Photograph (Respondent Exhibit), Exhibit 303 to Depo of Reichman, 1 pg.
Exhibit RX-0210, In re Matter of Certain Child Carriers, United States International Trade Connnission, Inv. No. 337-TA-1154, Color Photograph (Respondent Exhibit), Exhibit 303 to Depo of Reichman, 1 pg.
Exhibit RX-0212, In re Matter of Certain Child Carriers, United States International Trade Connnission, Inv. No. 337-TA-1154, Color Photograph (Respondent Exhibit), Exhibit 304 to Depo of Reichman, 1 pg.

(56) **References Cited**

OTHER PUBLICATIONS

Exhibit RX-0212, In re Matter of Certain Child Carriers, United States, International Trade Commission, Inv. No. 337-TA-1154, Color Photograph (Respondent Exhibit), Exhibit 304 to Depo of Reichman, 1 pg.
Exhibit RX-0214, In re Matter of Certain Child Carriers, United States International Trade Commission, Inv. No. 337-TA-1154, Color Photograph (Respondent Exhibit), Exhibit 305 to Depo of Reichman, 1 pg.
Exhibit RX-0214, In re Matter of Certain Child Carriers, United States International Trade Connnission, Inv. No. 337-TA-1154, Color Photograph (Respondent Exhibit), Exhibit 305 to Depo of Reichman, 1 pg.
Exhibit RX-0216, In re Matter of Certain Child Carriers, United States International Trade Commission, Inv. No. 337-TA-1154, Color Photograph (Respondent Exhibit), Exhibit 306 to Depo of Reichman, 1 pg.
Exhibit RX-0216, In re Matter of Certain Child Carriers, United States International Trade Connnission, Inv. No. 337-TA-1154, Color Photograph (Respondent Exhibit), Exhibit 306 to Depo of Reichman, 1 pg.
Exhibit RX-0218, In re Matter of Certain Child Carriers, United States International Trade Commission, Inv. No. 337-TA-1154, Color Photograph (Respondent Exhibit), Exhibit 307 to Depo of Reichman, 1 pg.
Exhibit RX-0218, In re Matter of Certain Child Carriers, United States International Trade Connnission, Inv. No. 337-TA-1154, Color Photograph (Respondent Exhibit), Exhibit 307 to Depo of Reichman, 1 pg.
Exhibit RX-0231, In re Matter of Certain Child Carriers, United States International Trade Commission, Inv. No. 337-TA-1154, Declaration of Kristin Dybvig-Pawelko regarding the No Tie Mei Tai Hibiscus Child Carrier Exhibit 7 to Depo of Dr. DybwigPawelko, Sep. 28, 2019, 9 pgs.
Exhibit RX-0231, In re Matter of Certain Child Carriers, United States International Trade Connnission, Inv. No. 337-TA-1154, Declaration of Kristin Dybvig-Pawelko regarding the No Tie Mei Tai Hibiscus Child Carrier Exhibit 7 to Pepo of Dr. DybwigPawelko, Sep. 28, 2019, 9 pgs.
Exhibit RX-0235, In re Matter of Certain Child Carriers, United States International Trade Commission, Inv. No. 337-TA-1154, Color Photograph labeled A (Respondent Exhibit), Exhibit 320 to Depo of Dr. Dybwig-Pawelko, 1 pg.
Exhibit RX-0235, In re Matter of Certain Child Carriers, United States International Trade Connnission, Inv. No. 337-TA-1154, Color Photograph labeled A (Respondent Exhibit), Exhibit 320 to Depo of Dr. Dybwig-Pawelko, 1 pg.
Exhibit RX-0237, In re Matter of Certain Child Carriers, United States International Trade Commission, Inv. No. 337-TA-1154, Color Photograph labeled B (Respondent Exhibit), Exhibit 320 to Depo of Dr. Dybwig-Pawelko, 1 pg.
Exhibit RX-0237, In re Matter of Certain Child Carriers, United States International Trade Connnission, Inv. No. 337-TA-1154, Color Photograph labeled B (Respondent Exhibit), Exhibit 320 to Depo of Dr. Dybwig-Pawelko, 1 pg.
Exhibit RX-0239, In re Matter of Certain Child Carriers, United States International Trade Commission, Inv. No. 337-TA-1154, Color Photograph labeled C (Respondent Exhibit), Exhibit 320 to Depo of Dr. Dybwig-Pawelko, 1 pg.
Exhibit RX-0239, In re Matter of Certain Child Carriers, United States International Trade Connnission, Inv. No. 337-TA-1154, Color Photograph labeled C (Respondent Exhibit), Exhibit 320 to Depo of Dr. Dybwig-Pawelko, 1 pg.
Exhibit RX-0240, In re Matter of Certain Child Carriers, United States International Trade Commission, Inv. No. 337-TA-1154, Color Photograph labeled D (Respondent Exhibit), Exhibit 320 to Depo of Dr. Dybwig-Pawelko, 1 pg.
Exhibit RX-0240, In re Matter of Certain Child Carriers, United States International Trade Connnission, Inv. No. 337-TA-1154, Color Photograph labeled D (Respondent Exhibit), Exhibit 320 to Depo of Dr. Dybwig-Pawelko, 1 pg.
Exhibit RX-0241, In re Matter of Certain Child Carriers, United States International Trade Commission, Inv. No. 337-TA-1154, Omni Alternate Preliminary—For Review Only (PowerPoint) 10 pgs.
Exhibit RX-0241, In re Matter of Certain Child Carriers, United States International Trade Connnission, Inv. No. 337-TA-1154, Omni Alternate Preliminary—For Review Only (PowerPoint) 10 pgs.
Exhibit RX-0242, In re Matter of Certain Child Carriers, United States International Trade Commission, Inv. No. 337-TA-1154, Color Photograph labeled E (Respondent Exhibit), Exhibit 320 to Depo of Dr. Dybwig-Pawelko, 1 pg.
Exhibit RX-0242, In re Matter of Certain Child Carriers, United States International Trade Connnission, Inv. No. 337-TA-1154, Color Photograph labeled E (Respondent Exhibit), Exhibit 320 to Depo of Dr. Dybwig-Pawelko, 1 pg.
Exhibit RX-0280, In re Matter of Certain Child Carriers, United States International Trade Commission, Inv. No. 337-TA-1154, TheBabyWearer post about carriers for facing out and referencing both Silly Goose and Pikkolo, Oct. 22, 2007, 9 pgs.
Exhibit RX-0280, In re Matter of Certain Child Carriers, United States International Trade Connnission, Inv. No. 337-TA-1154, TheBabyWearer post about carriers for facing out and referencing both Silly Goose and Pikkolo, Oct. 22, 2007, 9 pgs.
Exhibit RX-0289, In re Matter of Certain Child Carriers, United States International Trade Commission, Inv. No. 337-TA-1154, Pikkolo physical carrier and packaging, 12 pgs.
Exhibit RX-0289, In re Matter of Certain Child Carriers, United States International Trade Connnission, Inv. No. 337-TA-1154, Pikkolo physical carrier and packaging, 12 pgs.
Exhibit RX-0296, In re Matter of Certain Child Carriers, United States International Trade Commission, Inv. No. 337-TA-1154, Tula Free-to-Grow Carrier Instruction Manual, 25 pgs.
Exhibit RX-0296, In re Matter of Certain Child Carriers, United States International Trade Connnission, Inv. No. 337-TA-1154, Tula Free-to-Grow Carrier Instruction Manual, 25 pgs.
Exhibit RX-0297, In re Matter of Certain Child Carriers, United States International Trade Commission, Inv. No. 337-TA-1154, Tula Explore Carrier Instruction Manual, 8 pgs.
Exhibit RX-0297, In re Matter of Certain Child Carriers, United States International Trade Connnission, Inv. No. 337-TA-1154, Tula Explore Carrier Instruction Manual, 8 pgs.
Exhibit RX-0341, In re Matter of Certain Child Carriers, United States International Trade Commission, Inv. No. 337-TA-1154, Infantino Flip 4-in-I Carrier Design Drawings, Sep. 21, 2017, 12 pgs.
Exhibit RX-0341, In re Matter of Certain Child Carriers, United States International Trade Connnission, Inv. No. 337-TA-1154, Infantino Flip 4-in-I Carrier Design Drawings, Sep. 21, 2017, 12 pgs.
Exhibit RX-0342, In re Matter of Certain Child Carriers, United States International Trade Commission, Inv. No. 337-TA-1154, Infantino Flip 4-in-I Carrier Product Manual, 2 pgs.
Exhibit RX-0342, In re Matter of Certain Child Carriers, United States International Trade Connnission, Inv. No. 337-TA-1154, Infantino Flip 4-in-I Carrier Product Manual, 2 pgs.
Exhibit RX-0343, In re Matter of Certain Child Carriers, United States International Trade Commission, Inv. No. 337-TA-1154, Infantino Upscale Carrier Product Manual, 2016, 10 pgs.
Office Action for U.S. Appl. No. 15/337,813, dated May 22, 2018, 6 pgs.
Office Action for U.S. Appl. No. 15/602,744, dated Aug. 8, 2017, 42 pages.
Office Action for U.S. Appl. No. 15/796,422, dated Nov. 21, 2019, 20 pgs.
Office Action for U.S. Appl. No. 15/796,422, dated Nov. 26, 2018, 18 pgs.
Office Action for U.S. Appl. No. 15/916,990, dated May 15, 2018, 5 pgs.
Office Action for U.S. Appl. No. 16/204,581, dated Jan. 25, 2019, 5 pgs.

(56) **References Cited**

OTHER PUBLICATIONS

Office Action for U.S. Appl. No. 16/551,286, dated Apr. 23, 2020, 6 pgs.
Office Action for U.S. Appl. No. 16/694,641, dated Mar. 17, 2021, 17 pgs.
Office Action for U.S. Appl. No. DE 202010011906 dated Nov. 2010 U.S. Appl. No. 11/949,324, dated Oct. 6, 2009, 9 pgs.
Office Action Issued for Chinese Patent Application No. 201480023993. 2, dated Jan. 11, 2017, 20 pages.
Office Action issued for Chinese Patent Application No. 201480023993. 2, dated Sep. 26, 2017, 5 pages.
Office Action issued for European Patent Application No. 14773586. 4, dated Oct. 12, 2017, 5 pages.
Office Action Issued for Japanese Patent Application No. 2016-502118, dated Apr. 7, 2017, 9 pages.
Office Action Issued for U.S. Appl. No. 15/177,114, dated Oct. 3, 2017, 5 pages.
Office Action with English translation for Chinese Patent Application No. 201680071536.X, dated Apr. 7, 2021, 18 pgs.
Office Action with English translation for Japanese Patent Application No. 2018-521974, dated Oct. 24, 2019, 7 pgs.
Office Action with English translation for Japanese Patent Application No. 2019-523098, dated May 31, 2021, 13 pgs.
Office Action with English translation for Korean Patent Application No. 10-2020-7029046, dated Jun. 2, 2021, 8 pgs.
Packababy, 17 pgs., retrieved from Web Archives of http://www.packababy.corn/.
Peekara Story, https://blog.naver.com/becocarrier/140212053895 >, 2022.
Pelot, R.P. et al., "A Static Biomechanical Load Carriage Model", RTO HFM Specialist Meeting on Soldier Mobility Innovation in Load Carriage System Design and Evaluation, Kingston, CA, Jun. 27-29, 2000, 13 pgs.
Pelot, Ron P., et al., "Background Document for an Advanced Personal Load Carriage System for the Canadian Forces", Ergonomics Research Group, Queen's University, Kingston, ON, CA, Mar. 29, 1995, 148 pgs.
Petition for Inter Partes Review of U.S. Pat. No. 8,590,757, 100 pgs.
Petition for Inter Partes Review of U.S. Pat. No. 9,022,260, 94 pgs.
Preliminary Invalidity Contentions, *The Ergo Baby Carrier, Inc*. v. *BOBA Inc.*, Case No. 2:15-cv-08946, in the United States District Court for the Central District of California, Jul. 15, 2016, 18 pgs.
Rafelman, Rachel, The Portable Baby, Baby Gear for the First Year, 1997, pp. 40-41.
REI-Kelty Kangaroo Child Carrier, 2 pgs., retrieved from https://web.archive.org/web/19970222133805/http://rei.com/shopping/store3/ CAMPING/BABY_CARRIERS/BABY_CARRIERS/bud/617589. html.
Respondent's Post-Hearing Initial Brief, In re Matter of Certain Child Carriers, United States International Trade Commission, Inv. No. 337-TA-1154, Jan. 6, 2020, 102 pgs.
Respondent's Post-Hearing Responsive Brief, In re Matter of Certain Child Carriers, United States International Trade Commission, Inv. No. 337-TA-1154, Jan. 28, 2020, 127 pgs.
Respondent's Pre-Hearing Brief, In re Matter of Certain Child Carriers, United States International Trade Commission, Inv. No. 337-TA-1154, Nov. 8, 2019, 405 pgs.
Rose, Marion, Baby Carriers-Cultural History, Aware Parenting, Dec. 8, 2006, 11 pgs., retrievedfromhttp://awareparenting.blogspot.com/2006/12/baby-carriers-cultural-history.html.
Roseman, E., et al., Baby Carriers, The Canadian Parents' Sourcebook, 1986, at pp. 149-153.
Salter, R.B., "Etiology, Pathogenesis and Possible Prevention of Congenital Dislocation of the Hip", The Canadian Medical Association Journal, vol. 98, No. 20, May 18, 1968.
Santa Cruz Sentinel, https://www.newspapers.com/image/71319712, Jul. 26, 1987, 1 page.
SSC Instructions, http://www.isara.ro/en/content/7-instructiunissc,Copyright 2016 ISARA, 12 pages.
Tentative Ruling on Claim Construction, U.S. Pat. Nos. 8,590,757 and 9,022,260, *The Ergo Baby Carrier, Inc*. v. *BOBA Inc.*, Case No. 2: 15-cv-08946, in the United States District Court for the Central District of California, Dec. 1, 2016, 11 pgs.
The Age, Mar. 5, 1970 at p. 14. Certified Translation of "What parents should watch out for when buying babywearing carriers" by Kirkiliones, retrieved from http://web.archive.org/web/20010719033I 13/http://www.continuum -concept.de/liedkir.htm).
The Beginning Ergo Baby Blog, 13 pgs., retrieved from https://blog.ergobaby.com/2011/02/the-beginning/).
The Kozy Family, 16 pgs., retrieved from Web Archives of http://www.kozycarrier.homestead.com/.
Tough Traveler, Kidsystems, 3 pgs., retrieved from http://web.archive.org/web/20011106132550/http://www.toughtraveler.com/ cat7.html.
U.S. Appl. No. 60/501,396, filed Sep. 10, 2003, 9 pgs.
U.S. Trademark U.S. Appl. No. 75/057,147 Documents, U.S. Patent and Trademark Office, 44 pgs.
Warren, A.J., "The Mom Who Invented the Snugli", CBS News, Mar. 6, 2001, 4 pgs., retrieved from http://www.cbsnews.com/news/the-mom-whoinvented-the- snugli/.
Wee go Soft Baby Carrier, Instructions for Use, Wee go Babytragesacke, Berlin, DE, 4 pgs.
Weego Soft Baby Carrier, Instructions for Use, Weego Babytragesiicke, Berlin, DE, 4 pgs.
Welcome to Sutemigear, 10 pgs., retrieved from Web Archives of http://sutemigear.com/.
Wilkin et—Product Views, http://www.wilkinet.co.uk/BabyCarriers.asp, Feb. 17, 2003, 2 pages.
Wilkin et—Product Views, http://www.wilkinet.co.uk/BabyCarriers.asp, Feb. 17, 2003, 2 pgs.
Wilkinet—FAQ, http://www.wilkinet.co.uk/FAQs.asp, Feb. 17, 2003, 3 pgs.
U.S. Appl. No. 18/196,539, filed May 12, 2023, Rodney V. Telford.
U.S. Appl. No. 18/202,058, filed May 25, 2023, Rodney V. Telford.
NUNA International B.V., Cudl Clik Instructions User Manual, www.nunababy.com.
Najell Rise, Baby Carrier I 0-3 years I 3 Carrying Position, https://najell.com/p/najell-rise-jet-black.
Infantino, Flip 4-in-1 Convertible Carrier Instruction Manual, 2018, www.info@Blue-box.com.
Infantino, Flip 4-in-1 Convertible Carrier Instruction Manual, 2022, www.infantino.com.
Lascal M1 Carrier User Manual, ASTM F2236-16a, EN13209-2:2015, US-80006 Ver13, www.lascal.net.
Meet ISARA Quick Half Buckle Carrier, https:// www.yumpu.com/en/document/read/63362302/isara-quick-half-buckle-carrier.
Apprica, Baby strap "Laclis Laclis", Baby Products Apprica Official Website Sep. 2023, https:// www.aprica.jp/products/sling/detail/sling/laclis/, Japan.
LUCKY Industries Co., Ltd., LUCKY 1934 LUCKY Fuwa Hug, Waist Belt Type, https://lucky-industries.jp/products/lucky1934-fuwa-hug/, Japan.
LUCKY Industries Co., Ltd., LUCKY1934 (Lucky 1934) fuwahug Fuwahug Baby Carrier Baby Strap L4620 (from 14 days old), https:// luckybabystore.jp/products/fuwahug 2023, Japan.
U.S. Appl. No. 17/572,084, Final Office Action dated Jul. 10, 2023.
U.S. Appl. No. 18/202,058, Non-Final Office Action dated Aug. 14, 2023.
European Patent Application 16860977.4 Office Action dated Mar. 22, 2023.
European Patent Application 21180405.9 Decision to Grant dated May 11, 2023.

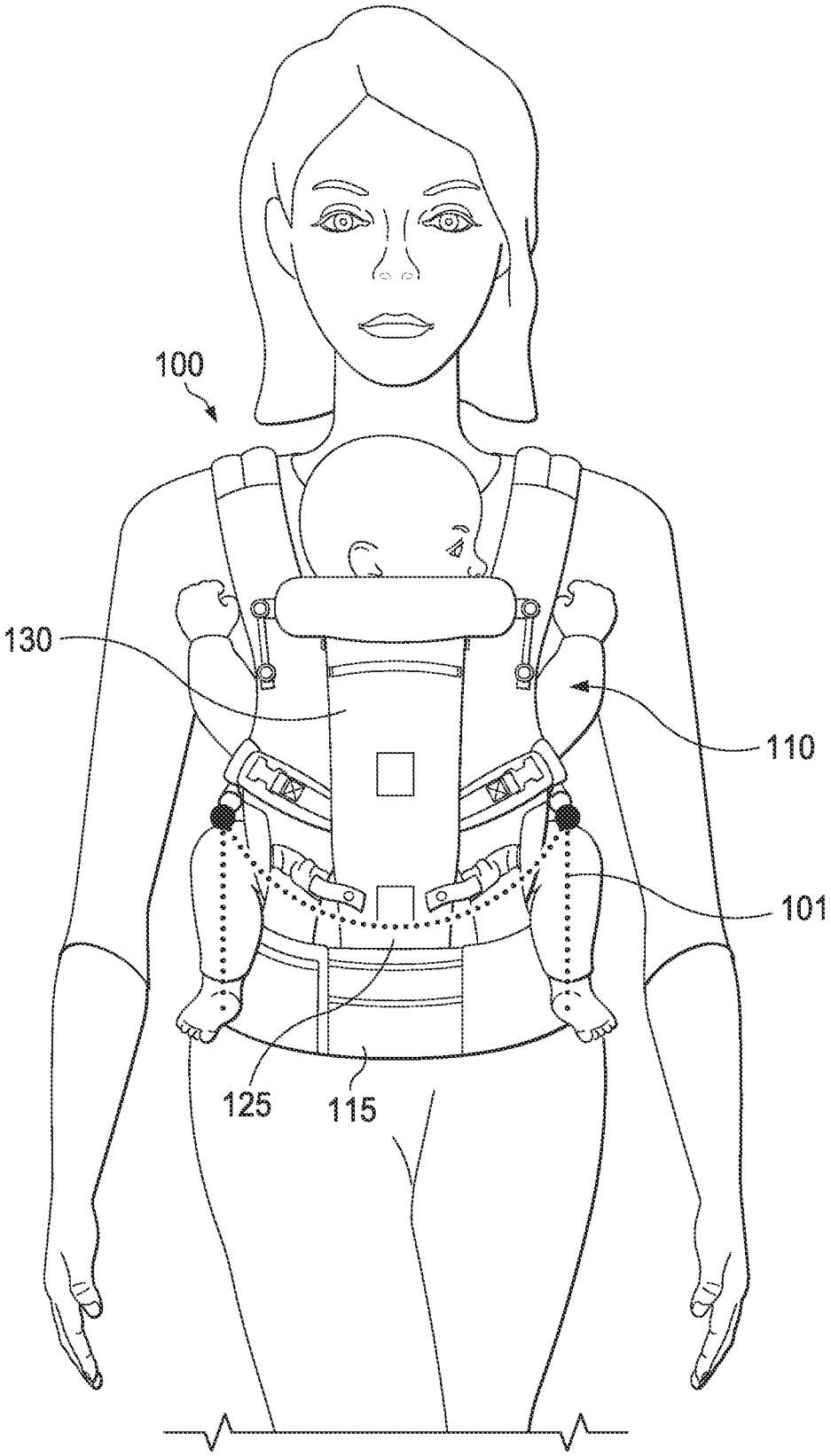

FIG. 1

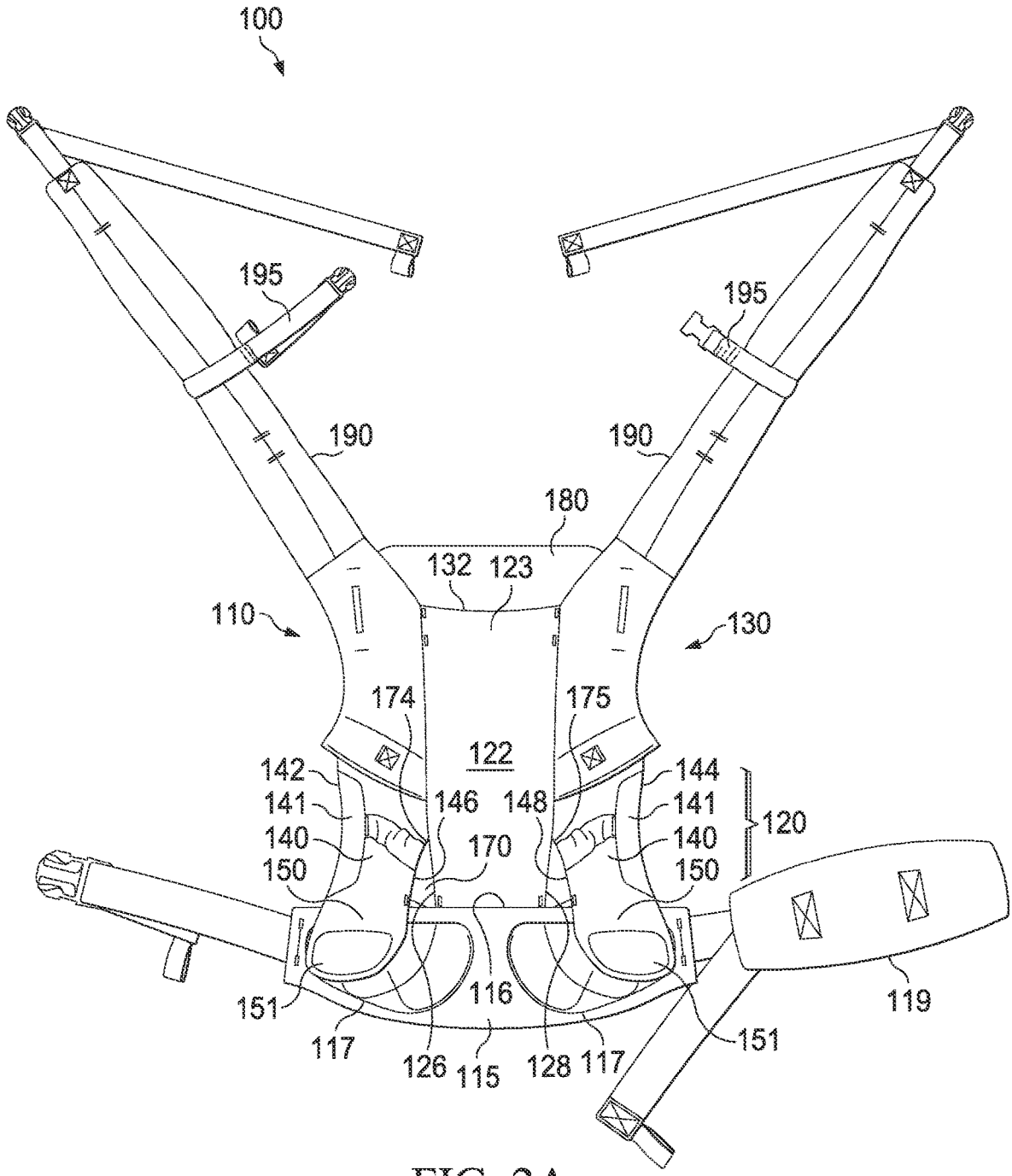
100
195
195
190
190
180
132
123
110
130
174
175
122
142
144
141
146
148
141
120
140
170
140
150
150
151
116
119
117
126
115
128
117
151

FIG. 2A

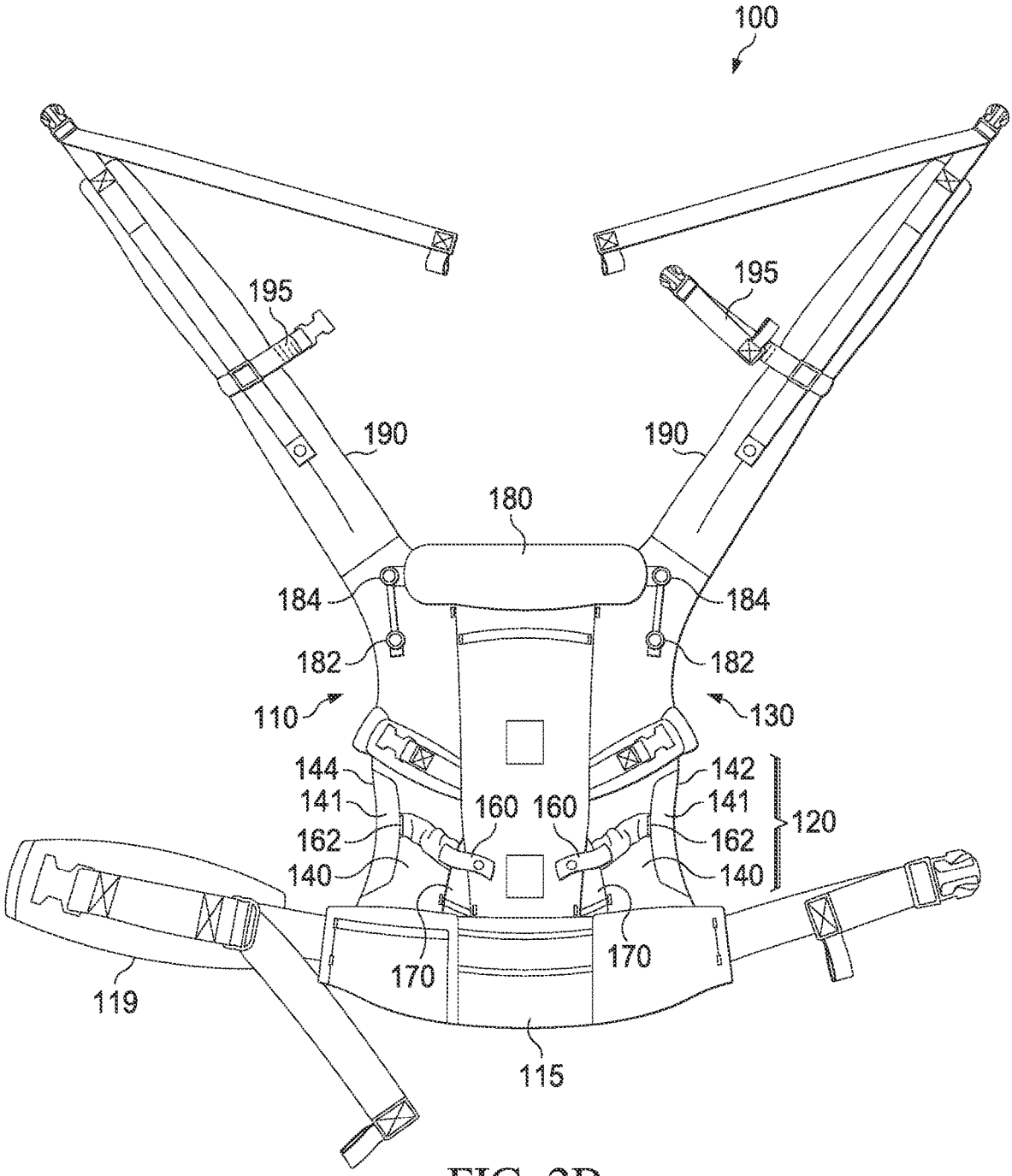
100
195
195
190
190
180
184
184
182
182
110
130
144
142
141
141
160
160
120
162
162
140
140
170
170
119
115

FIG. 2B

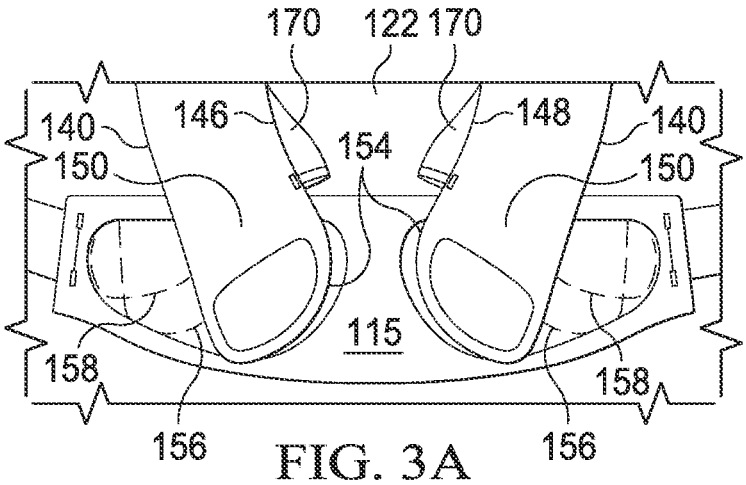

FIG. 3A

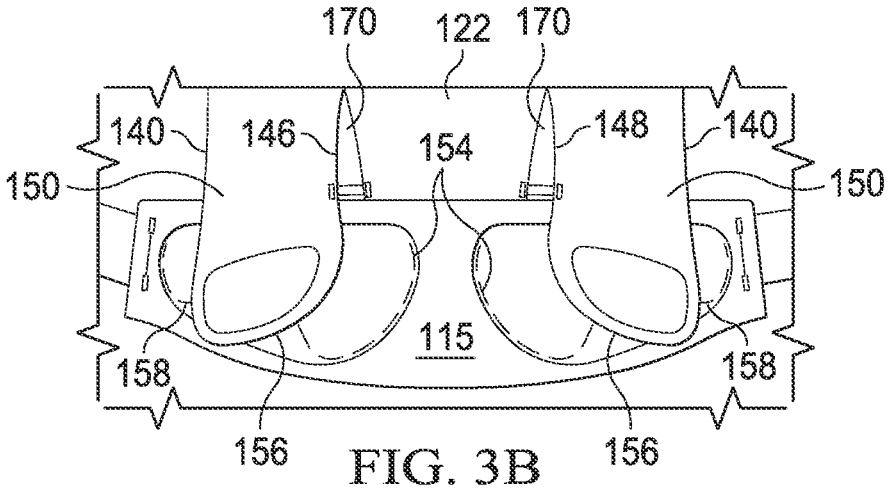

FIG. 3B

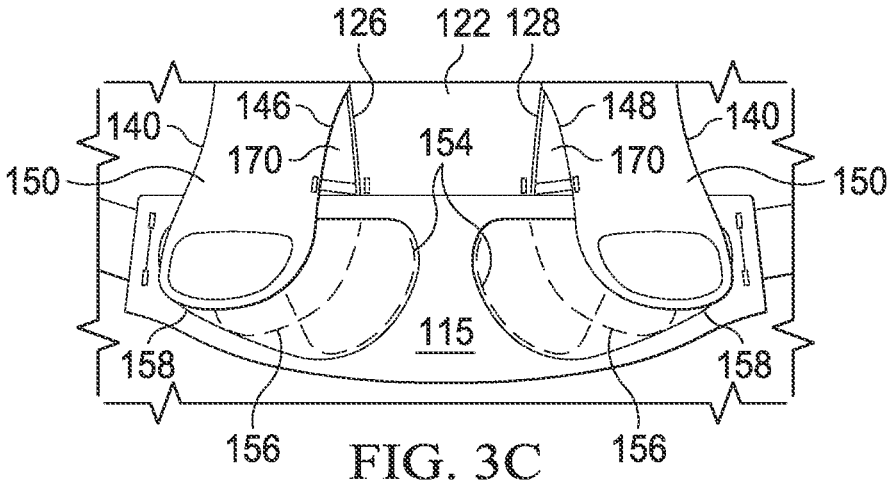

FIG. 3C

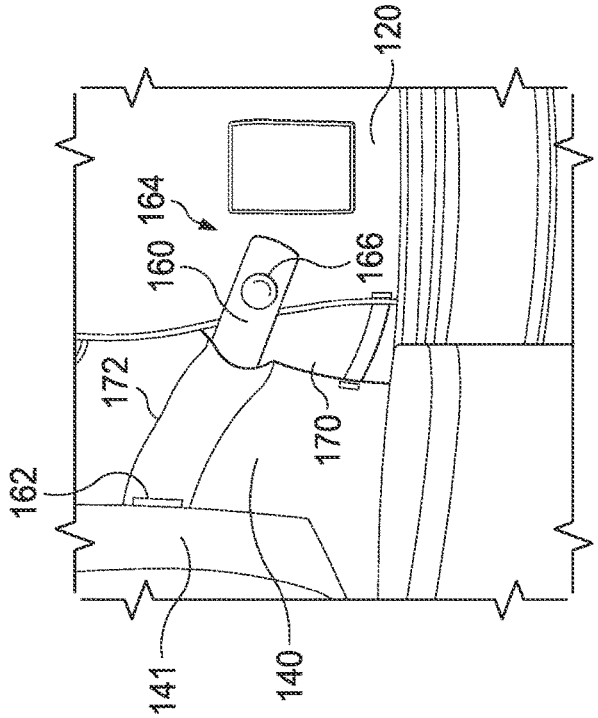

FIG. 4C

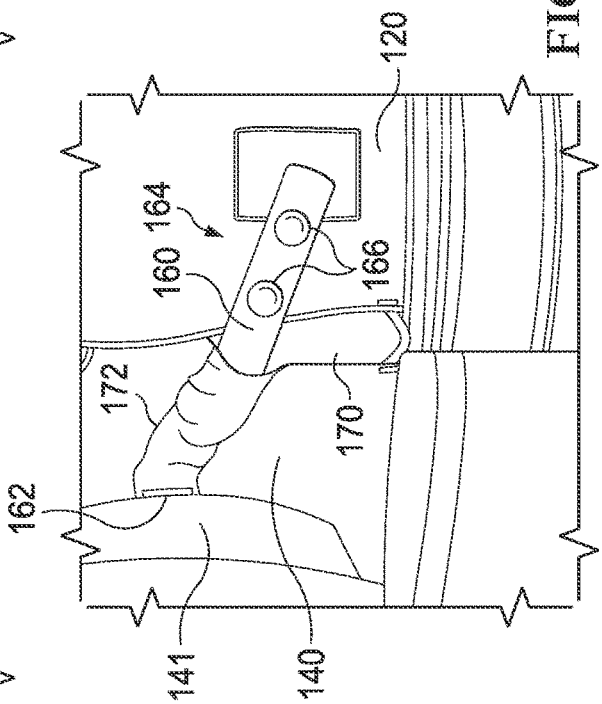

FIG. 4B

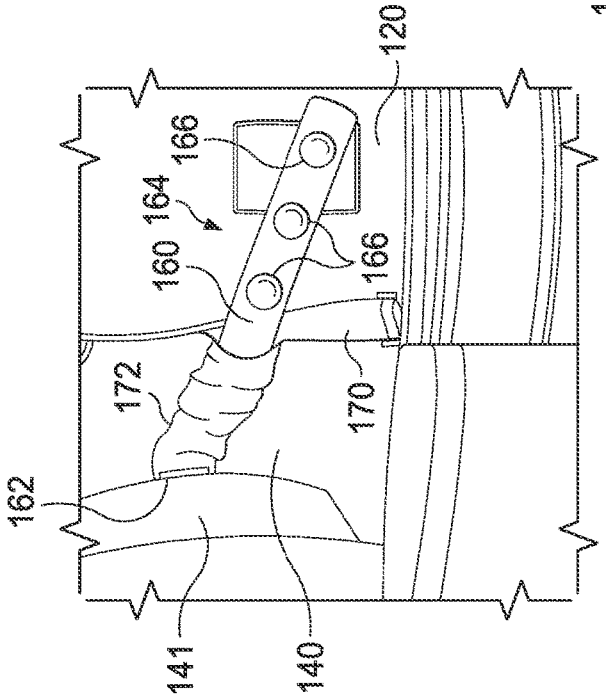

FIG. 4A

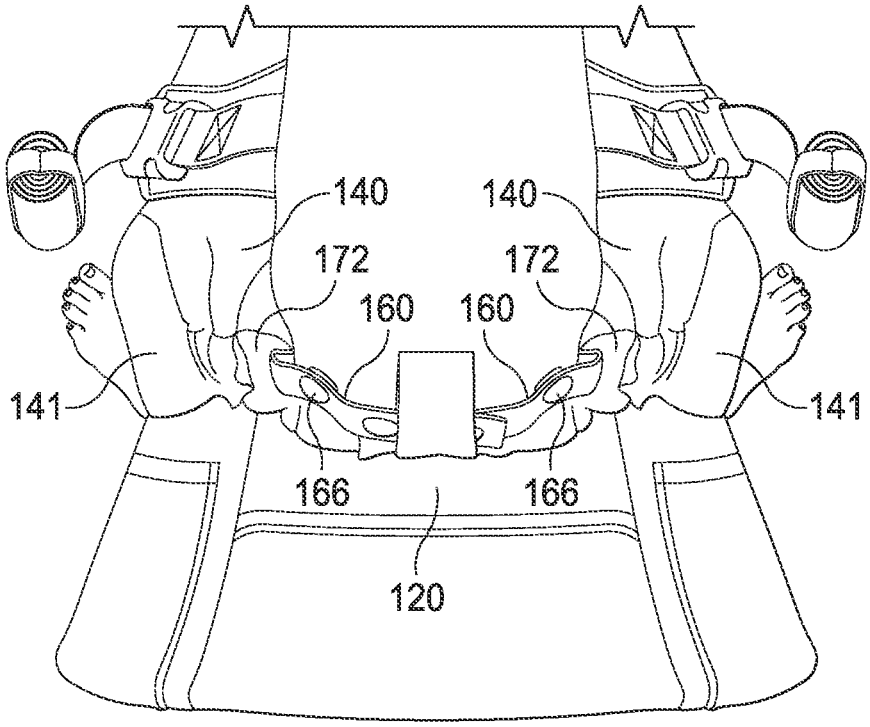
140
140
172
172
160
160
141
141
166
166
120

FIG. 5A

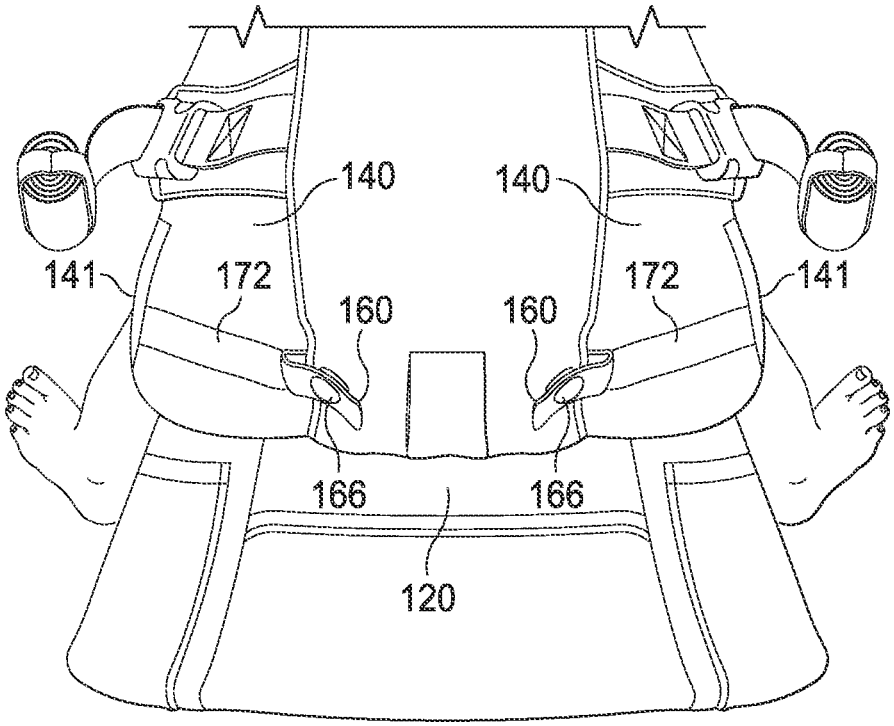
140
140
141
172
172
141
160
160
166
166
120

FIG. 5B

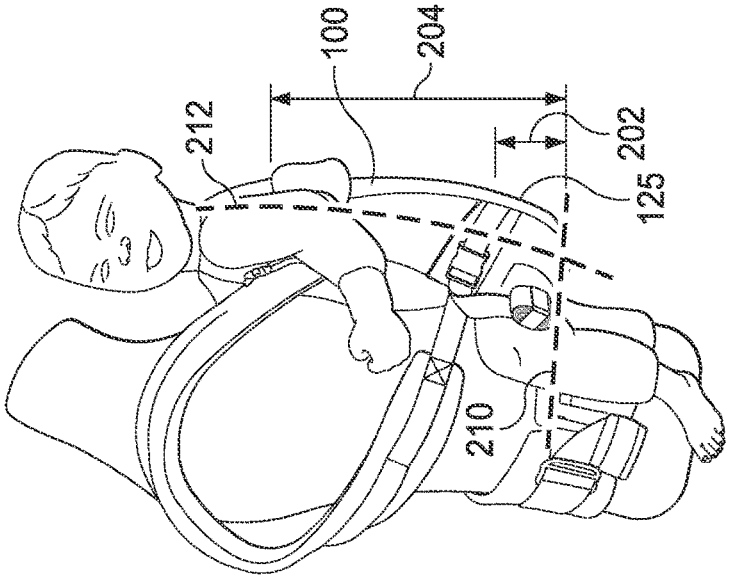

FIG. 6C

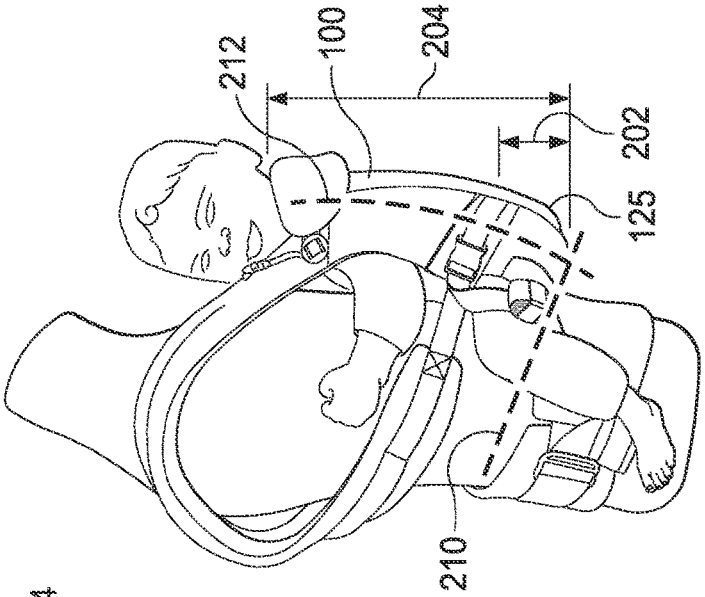

FIG. 6B

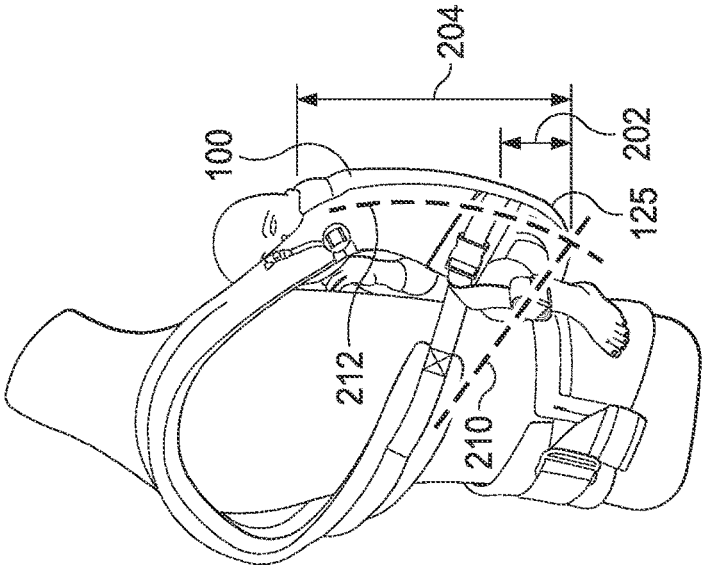

FIG. 6A

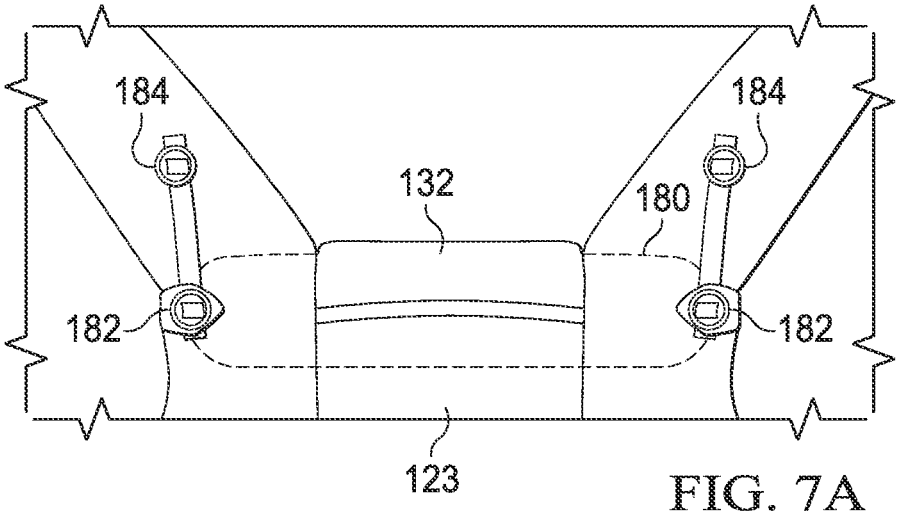

FIG. 7A

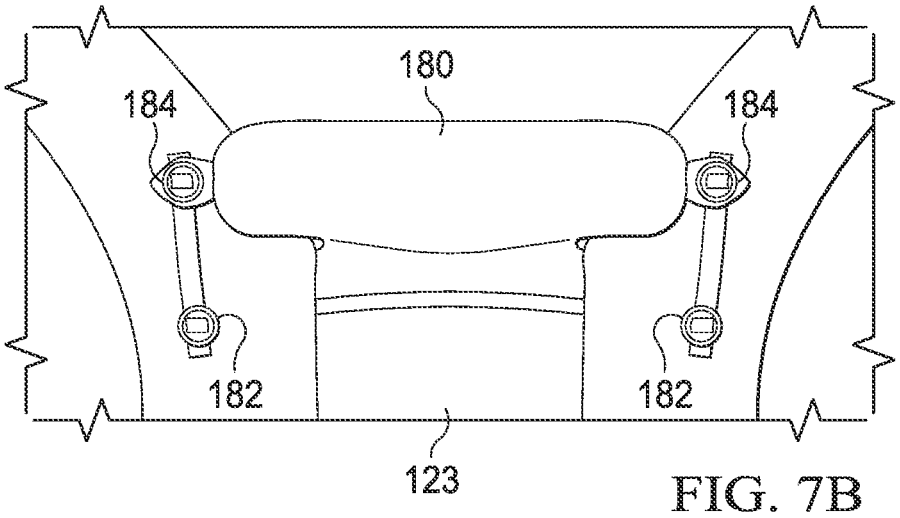

FIG. 7B

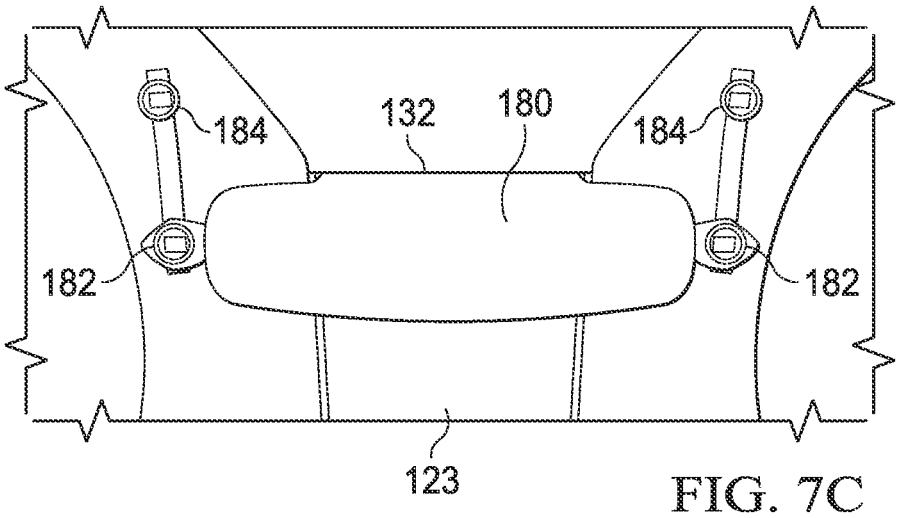

FIG. 7C

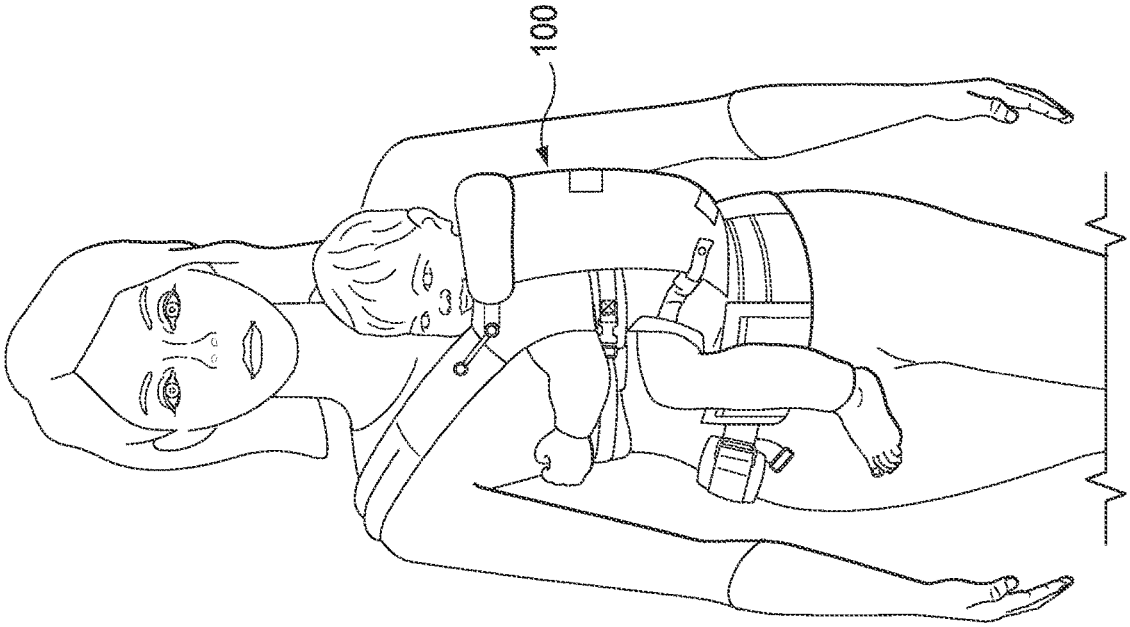

FIG. 9

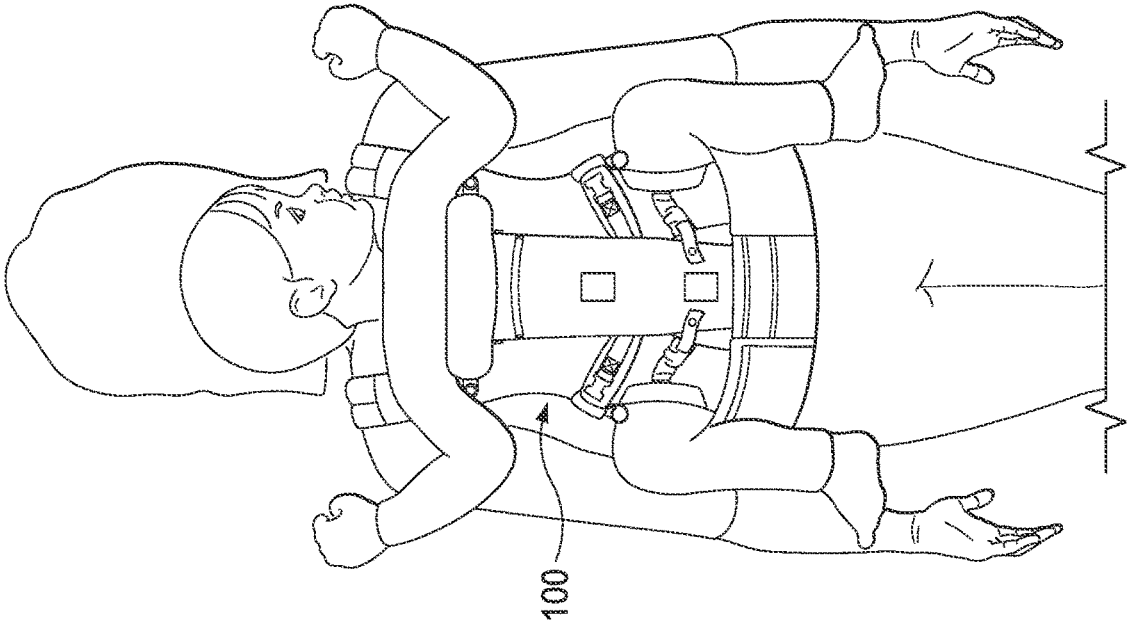

FIG. 8

ADJUSTABLE CHILD CARRIER

RELATED APPLICATION

This application is a continuation of U.S. patent application Ser. No. 18/108,979, filed Feb. 13, 2023; which is a continuation of U.S. patent application Ser. No. 17/349,821 filed Jun. 16, 2021, now U.S. Pat. No. 11,583,104 issued Feb. 21, 2023; which is a continuation of U.S. patent application Ser. No. 16/551,286 filed Aug. 26, 2019, now U.S. Pat. No. 11,051,634 issued Jul. 6, 2021; which is a continuation of U.S. patent application Ser. No. 15/337,813 filed Oct. 28, 2016, now U.S. Pat. No. 10,426,275 issued Oct. 9, 2019; which claims the benefit of priority to U.S. Provisional Patent Application No. 62/248,745 filed Oct. 30, 2015. The disclosures of which are incorporated herein by reference in their entirety.

TECHNICAL FIELD

The present disclosure relates to child carriers. Even more particularly, the present disclosure relates to a child carrier that is adaptable to ergonomically carry a child as the child grows.

BACKGROUND

Various child carriers are currently available for transporting a child by a parent or other individual. Child carriers have become popular for carrying infants and toddlers because they afford the wearer freedom of hand and arm movement while carrying a child. In pursuit of child safety, some of these devices have become overly complex involving, among other things, rigid seats and frames which considerably increase the weight of the carrier and cannot accommodate for the growth of the child. These complex carriers are relatively heavy and place an undue strain upon the wearer, particularly in the lumbar region. In addition, because of the size of many of the present day carriers, they can only be worn on the back thus denying the child the comfort and security of a position where a child and its mother may be in a face-to-face relationship.

Soft structured carriers have become increasingly popular because they are lighter, less cumbersome and more comfortable to wear. These carriers incorporate padding, stitching and fabrics, rather than a rigid frame, to provide the structure. However, some soft-structured carriers hold a child in an upright position with the child's legs hanging down and the base of the child's spine supporting the child's bodyweight. This position may not be optimal for infant and other young children. While an adult spine has four curves, a young child's spine only has two curves. A majority of a young child's spine will form a C-shape (so-called total kyphosis). Positioning a young child, particularly an infant, in an upright position may unduly limit curvature of the spine and puts stress on the infant's sacrum. This can cause the infant's pelvis to tilt backward limiting leg and hip movement, which may impede healthy development of the infant's pelvis.

Moreover, conventional soft structured carriers are usually designed for a very limited age, weight and size of child and make compromises regarding the shape of the carrier to accommodate a range of ages. Even if a carrier supports ergonomic positioning of the child at one age/weight/size, positioning a child in an ergonomic position through the range of ages while utilizing the same carrier poses a problem as different children develop at different rates and

the anatomy and physiology of children changes dramatically between infancy and toddlerhood.

A carrier designed for infants or younger babies may not accommodate a child as the child grows into toddlerhood because the seat and back support portions of the carrier will become too small. In an attempt to make carriers more adaptable, some carriers provide additional panels that can be unfolded and added to the seat to widen the seat and/or back panels that can expand (e.g., by unfolding additional back panel material or attaching new panels) to accommodate the child's growth. However, simply widening the seat or lengthening the carrier does not adequately address proper ergonomics.

On the other hand, a carrier designed for older children may not properly support an infant. One solution to this problem is the use of a specially designed "infant insert." In general, an infant insert is an accessory that incorporates additional padding and structure and makes it possible to carry a small infant in a carrier that would not otherwise properly support the infant. However, not all carriers support the use of infant inserts. Moreover, depending on design, infant inserts may be cumbersome, non-intuitive, and easily lost. In particular, the use of a separate infant insert may require that parents keep track of two separate devices and may significantly increase the difficulty of configuring the carrier for a wearer, the wearing of the carrier, or the ingress and egress of a child to the carrier.

Due to the foregoing issues, parents often opt for changing carriers as the child ages.

SUMMARY

Embodiments described herein provide a wearable child carrier that can be adapted to a baby's size and provide ergonomic positioning of the child throughout the range of the carrier adjustability.

According to one embodiment, a child carrier includes a waist belt adapted for securing about a wearer's hips and a main body coupled to the waist belt, where the main body is adapted to form a child carrying area in cooperation with a wearer's torso. The main body can include a torso support portion configured for supporting at least the torso of a child; and an adjustable bucket seat configurable in a plurality of bucket seat configurations, each of the plurality of bucket seat configurations having a different bucket seat depth and bucket seat width and adapted to support a child in a corresponding size range in a spread squat position. In one embodiment, the plurality of bucket seat configurations comprises a configuration adapted to support an infant in a spread squat position without an infant insert. The plurality of bucket seat configurations may include a configuration adapted to support a toddler in a spread squat position.

The child carrier can include one or more adjustment areas adapted to adjust the bucket seat depth and the bucket seat width. In one embodiment, the child carrier has a minimum wearable height that is dependent on the bucket seat depth.

In accordance with one aspect, the plurality of bucket seat configurations comprises a first configuration adapted to support a child in a first size range in a first spread squat position; and a second configuration adapted to support a child in a second size range in a second spread squat position. The first configuration may have a first bucket seat width and first bucket seat depth and the second configuration may have a second bucket seat width and a second bucket seat depth, wherein the first bucket seat width is less

than the second bucket seat width and the first bucket seat depth is greater than the second seat bucket depth.

In one embodiment, the main body further comprises a seat center portion coupled to the waist belt and torso support portion and thigh supports disposed on either side of the seat center portion. The thigh supports can be adapted to pass under and support a child's thighs and cooperate with the seat center portion to form the bucket seat. The carrier can further include a base width adjuster coupled to each thigh support. The base width adjusters can be configured for selective coupling to the waist belt in multiple locations to adjust a width of the main body at the waist belt. The base width adjusters can also be configured for selective coupling to the waist belt in multiple locations to adjust the bucket seat depth.

The child carrier may include one or more fabric shaping members adapted to control a bulge of the bucket seat. As one example, the fabric shaping members may comprise darts disposed between the thigh supports and the seat center portion, where the darts are adapted to open or close responsive to adjustment of the base width adjusters. The base width adjusters may be configurable in a first setting corresponding to a maximum bucket seat depth and a second setting corresponding to a minimum bucket seat depth, wherein the darts or other fabric shaping members have a first shape corresponding to the first setting and a second shape corresponding to the second setting.

In accordance with one embodiment, the seat center portion comprises laterally outer edges and the thigh supports comprise laterally inner edges. The fabric shaping members may be disposed between the laterally outer edges and the laterally inner edges. The base width adjusters can be adjustable through rotation to rotate the laterally inner edges relative to the laterally outer edges to open or close the fabric shaping members. Furthermore, adjusting the base width adjusters can increase or decrease the bucket depth/shape.

The carrier may further include thigh width adjusters comprising thigh width adapters coupled to the thigh supports where the thigh width adapters can adjust the width of the bucket seat.

The carrier may also include a neck support configurable in an inside folded down position in which the neck support is positioned in the child carrying area to support a child's neck. The neck support may also be configured in an extended position to provide additional carrier length and support for a larger child, or additional neck support and coverage for a sleeping baby. The neck support may also be configurable in an outside folded down position.

According to one embodiment, a method of configuring a child carrier can comprise: for a child to be carried, adjusting a bucket seat of the child carrier to a child's size and positioning the child in a child carrying area of the child carrier such that the child is supported in an ergonomic spread squat position. Adjusting the bucket seat to the child's size can include configuring a depth of the bucket seat by coupling base width adjusters of the child carrier to a waist belt of the child carrier at positions for a base width setting corresponding to the child's size and adjusting thigh width adapters to adjust a width of the bucket seat. Configuring the depth of the bucket seat may further comprise rotating the base width adjusters to open or close darts. The method may further include configuring an adjustable neck support to fill a portion of the child carrying area and support a child's neck.

Embodiments described herein provide an advantage over prior carriers because the ergonomic bucket seat gradually adjusts to a growing baby from newborn to toddler, to ensure baby is seated in an ergonomic spread-squat, natural "M shape" position at multiple stages.

As an additional advantage, embodiments described herein can provide an adjustable seat shape that does not require adding to or removing structure from the carrier to change the seat shape. For example, some embodiments can accommodate infants and larger children without requiring an infant insert for an infant.

Embodiments described herein can provide another advantage by allowing for easy adjustment of the carrier seat shape without adding or removing panels from the seat.

Embodiments described herein can provide another advantage by providing a carrier with a wearable length that can be adjusted without requiring complicated mechanisms to extend the overall length of the carrier.

BRIEF DESCRIPTION OF THE DRAWINGS

For a better understanding of these and other objects of the invention, reference will be made to the following detailed description of the invention which is to be read in association with the accompanying drawings, wherein:

FIG. **1** is a diagrammatic representation of an adult wearer carrying a child in an adjustable carrier;

FIG. **2**A is a diagrammatic representation of an inside view of one embodiment of an adjustable baby carrier;

FIG. **2**B is a diagrammatic representation of an outside view of one embodiment of adjustable carrier;

FIG. **3**A is a diagrammatic representation of one embodiment of a base width adjuster in a first base width adjuster configuration;

FIG. **3**B is a diagrammatic representation of one embodiment of a base width adjuster in a second base width adjuster configuration;

FIG. **3**C is a diagrammatic representation of one embodiment of a base width adjuster in a third base width adjuster configuration;

FIG. **4**A is a diagrammatic representation of one embodiment of a carrier with thigh width adjusters in a first thigh width adjuster configuration;

FIG. **4**B is a diagrammatic representation of one embodiment of a carrier with thigh width adjusters in a second thigh width adjuster configuration;

FIG. **4**C is a diagrammatic representation of one embodiment of a carrier with thigh width adjusters in a third thigh width adjuster configuration;

FIG. **5**A is a diagrammatic representation of another view one embodiment of a carrier with thigh width adjusters in the first thigh width adjuster configuration;

FIG. **5**B is a diagrammatic representation of another view of one embodiment of a carrier with thigh width adjusters in the third thigh width adjuster configuration;

FIG. **6**A is a diagrammatic representation of one embodiment of a carrier with bucket seat in a first seat configuration;

FIG. **6**B is a diagrammatic representation of one embodiment of a carrier with bucket seat in a second seat configuration;

FIG. **6**C is a diagrammatic representation of one embodiment of a carrier with bucket seat in a third seat configuration;

FIG. **7**A is a diagrammatic representation of one embodiment of a carrier with a neck support in a first neck support configuration;

FIG. 7B is a diagrammatic representation of one embodiment of a carrier with a neck support in a second neck support configuration;

FIG. 7C is a diagrammatic representation of one embodiment of a carrier with a neck support in a third neck support configuration;

FIG. 8 is a diagrammatic representation of one embodiment of a wearer wearing a carrier in a back carry position;

FIG. 9 is a diagrammatic representation of one embodiment of a wearer wearing a carrier in a side carry configuration.

DETAILED DESCRIPTION

Child carriers and related methods and the various features and advantageous details thereof are explained more fully with reference to the nonlimiting embodiments that are illustrated in the accompanying drawings and detailed in the following description. Descriptions of well-known starting materials, processing techniques, components and equipment are omitted so as not to unnecessarily obscure the invention in detail. It should be understood, however, that the detailed description and the specific examples, while indicating preferred embodiments of the invention, are given by way of illustration only and not by way of limitation. Various substitutions, modifications, additions and/or rearrangements within the spirit and/or scope of the underlying inventive concept will become apparent to those skilled in the art from this disclosure.

The present disclosure relates to child carriers that allow a child, including an infant, to be carried in a manner that supports the child and maintains the child's pelvis and thighs in a preferred ergonomic position through a range of ages. In particular, embodiments described herein provide carriers that support the child's bottom, pelvis and thighs in a desired position. Embodiments described herein also allow a child to be carried on the front or back or to the side of the person carrying the child. The carrier can be worn by a user in front of, in back of or to the side of the wearer with the child's weight carried near the wearer's center of gravity and close to the wearer's front, back or side in a front, back or side position, respectively.

The adjustable child carrier can be configured to accommodate children of a wide range of sizes in a front, rear or side carrying position while supporting the child's hips, pelvis, bottom and both upper thighs when the child is being carried in various orientations. For example, embodiments of a child carrier as disclosed herein may provide an adjustable child carrier usable with a newborn children (infant) (e.g., around 7 pounds) and additionally with children all the way to up to around 45 pounds or more.

In accordance with one aspect of the present disclosure, a carrier includes a bucket seat for a child and one or more adjustment areas that when adjusted serve to adjust a depth of the seat bucket and a height of the child carrier. When adjusted to a newborn setting, the carrier is configured such that the depth of the seat bucket may be at a maximum. Conversely, when adjusted to its maximum, or largest size, setting (e.g., a setting for the largest child the carrier is designed to accommodate) the depth of the seat bucket may be at a minimum. When the depth of the bucket seat is at a maximum the thighs may be supported such that the angle of the thighs of the child relative to the coronal plane may be greatest and when the depth of the bucket seat is at a minimum the thighs may be supported such that the angle of the thighs of the child relative to the coronal plane may be the smallest. Similarly, then, the bucket seat is at a maximum, the carrier may be configured such that the carrier maintains a child carried therein with relatively more curve in their spine than when the bucket seat is at a minimum depth.

A child carrier may include one or more adjustment points that work alone or in cooperation to adjust the shape of the bucket seat area provided by the child carrier. These adjustment points may include base width adjusters adapted to adjust the width of the main panel of the baby carrier at a point where the main panel is coupled to the waistband of the carrier. The adjustment of the width of the base of the main panel may serve to provide maximum shape for the bucket area and thus maximum depth of the bucket seat area when adjusted to the narrowest setting for newborn babies and the minimal depth of the bucket seat area for the largest children when adjusted to the widest setting.

Another adjustment point provided by embodiments may be thigh width adjusters. These thigh width adjusters are configured to adjust the width of the main panel of the baby carrier at a point in the main panel configured to accommodate the thighs of a child. The thigh width of the main panel may be smallest at the tightest or smallest setting of the thigh width adjusters for newborn babies and widest at its largest or loosest setting (which may be fully released or not engaged) for the largest children (e.g., that the carrier is designed to accommodate).

These adjustment points may also work in cooperation to adjust the baby carrier. For example, the thigh width adjusters may also serve as more granular adjustment for the bucket area within the range of gross adjustment provided by the base width adjuster.

The carrier of certain embodiments may also be configured to adjust in height. In certain embodiments, the length of the physical carrier from the top edge of the waist belt at the center to the top edge of carrier at the center remains consistent, however, the wearable height changes depending on the setting of the bucket seat size. With the base width at its smallest/narrowest setting the bucket seat is deeper consuming more of the carrier length measurement, thus leaving less measurement for the wearable height while with the base width at its largest/widest setting the bucket seat is shallow consuming less of the carrier length measurement, thus leaving more measurement for the wearable height.

Embodiments of such carriers may also include an adjustable neck support. Such a neck support or collar that may be positioned according to the direction the child is facing, the size of the child, or other criteria. The adjustable neck support may be rotatable relative to the main panel such that the neck support may be extended increasing the center height of the carrier giving additional back or neck support for a child (depending on the size of the child). The neck support may also be folded back away from the wearer to reduce the height of the carrier (e.g., for non-infant children). The neck support may also be folded down into the carrier toward the wearer such that it may reside inside the child carrying area to give an infant or other child additional head or neck support.

Embodiments as disclosed herein may therefore provide an adjustable child carrier configured to accommodate children of a wide range of sizes in a front, rear or side carrying position. Embodiments may thus be sized appropriately to carry an infant without the use of an additional infant insert. Configured according to such a setting, the carrier may be adapted for placement of a child in a child carrying area of the child carrier with the infant's knees raised. In one embodiment, when adjusted to accommodate an infant the carrier is adapted to support the infant in a position with the

infant's femur at an angle of 90-120 degrees from the coronal plane. Additionally, the carrier can be adapted to support the infant in a position with the infant's knees at 45-60 degrees from the median plane. In particular embodiments, the carrier can be adapted to promote a spread-squat-position.

The carrier can be ergonomic for the wearer as well. A padded waist belt may provide lumbar support and may cooperate with shoulder straps (that may attach to the same or opposite sides of the carrier) that can form a configurable harness that can position the carrier in a front, side or back carry position while distributing the weight evenly to the wearer. The carrier may be adjusted such that the child is positioned close to the wearer's center of gravity which distributes the child's weight evenly. In some embodiments, the harness may be adjusted so that a majority of the child's weight is transferred to the wearer's hips.

FIG. **1** is a diagrammatic representation of an adult wearer carrying a child in an adjustable carrier **100**. Adjustable carrier comprises a main body **110** coupled to a waist belt **115**. Main body **110** includes a torso support portion **130** and a bucket seat **125**. The torso support portion **130** is configured for supporting the upper body of the child while in the carrier **100**. The seat **125** is configured for supporting the legs, hips and posterior of the child in an ergonomic position. As discussed in more detail below, embodiments of adjustable carrier **100** can include various adjustments such that carrier **100** can be adjusted as the child grows to support the child in an ergonomic spread squat position appropriate for the weight or size of the child with the child's pelvis, bottom and thighs all being supported. In an ergonomic spread squat position (also known as the "frog leg", "frog", "squat spread" or "M" position) (indicated by line **101**) the flexion at the hip joint is at least 90° and in some cases is 110° to 120° from the coronal plane, and the spreading angle can average at approximately 45-55° from the median plane. As carrier **100** is adjustable, the angle of the hips and spread can depend on the settings of the carrier **100** and developmental stage of the child.

In one embodiment, the carrier can be adapted to support the child in a position with the child's femur approximately 90° to 120° (or other elevated position) from the coronal plane and to position the child's knees with an amount of spreading. The amount of spreading may depend on the developmental stage of the child and orientation with a newborn having less than 30°, then approximately 30°, then approximately 35°-40° and so on, such that the final spread is approximately 40°-45°, though other amounts of spreading may be achieved including (e.g., for example approximately 55°). In one embodiment, the spreading may be at least 20° degrees from the median plane. The child's weight can be distributed across the child's bottom, thighs and back so that the sacrum does not bear too much weight and the child can rest with a more naturally curved "C" spine in a spread squat position that is believed to be better for pelvic development. It can be noted, however, that the child can be positioned in any comfortable position, preferably emphasizing a supportive posture rather than a posture where the child is primarily sitting on his or her sacrum.

FIG. **2**A is a diagrammatic representation of an inside view of one embodiment of an adjustable baby carrier **100** and FIG. **2**B is a diagrammatic representation of an outside view of one embodiment of adjustable carrier **100** (FIGS. **2**A and **2**B are referred to collectively herein as FIG. **2**). Carrier **100** comprises a main body **110** coupled to a waist belt **115**. Main body **110** includes an upper torso support portion **130**, a seat portion **120** and thigh support areas **140**. Carrier **100** may also include shoulder straps **190** and a chest strap **195**. A child can be supported in a child carrying area created by the main body **110** in cooperation with the wearer's torso. Torso support portion **130** is configured to support upper body of the child while in the carrier while seat portion **120** cooperates with adjustable thigh support areas **140** to form an adjustable bucket seat **125** (FIG. **1**) adapted to ergonomically position the child's legs and hips. Waist belt **115** and shoulder straps **190** provide a harness that distributes the child's weight to the wearer. Chest strap **195** can be used to secure left and right shoulder straps together.

Bucket seat portion **120** and thigh support areas **140** are adapted to pass from the outer side of the child carrying area (the side away from the wearer's torso) to inner side to form supportive and adjustable bucket seat **125**. Inner end portions of thigh support areas **140** can be selectively coupled to waist belt **115** by base width adjusters **150** that are configurable for adjusting the width and depth of the bucket seat **125**. Thigh width adjusters **160** can also be provided to provide additional width adjustment. Thus, the bucket seat **120** can be adjusted to accommodate a range of ages/sizes/weights.

The supportive and adjustable bucket seat **125** can have a generally concave (e.g., "C" shape) inner profile from the inward side to the outward side and from right to left. Seat side edges **142**, **144** (formed by the edges of thigh support areas **140**) can be higher than the center of the seat and can be spaced such that the side edges pass under and around the child's thighs at a distance from the child's hips such that the child's legs (e.g., above the knee) do not dangle down. In some embodiments, thigh support areas **140** may provide additional support. In particular, in certain embodiments the thigh support areas **140** may include gathers, elastic material or another type of biasing material.

Bucket seat portion **120** comprises a seat center portion **122** that is coupled to waist belt **115** or other portion of carrier **100** at one end and to upper torso support portion **130** at the other end. Seat center portion **122** may be formed from a single piece of material, or may be formed from multiple pieces of material, multiple layers of materials, or multiple materials. The junction between upper torso support portion **130** and seat center portion **122** may be a substantially seamless transition. For example, in one embodiment, a center panel **123** may form seat center portion **122** and an upper torso center panel such that seat center portion **122** and the upper torso center panel comprise a unitary construction of one or more layers of material. In other embodiments, the junction may include seams, edges or other features delineating between upper torso support portion **130** and seat center portion **122**.

Thigh support areas **140** are disposed to the left and right of seat center portion **122**. Thigh support areas **140** may be selectively coupled to waist belt **115** by base width adjusters **150** such that thigh support areas **140** pass under and around the child's thighs at a distance from the child's hips where the portion of the thigh support areas **140** that pass under and around the child's thighs is higher than the child's bottom so that the child's knees are lifted. The thigh support areas **140** can have sufficient stiffness such that the child's thighs may be encouraged to spread by the thigh support areas **140** or wearer's torso. In one embodiment, thigh support areas **140** provide areas of thigh padding **141** to support the child's thighs.

Base width adjusters **150** may be coupled to respective thigh support areas **140**. In one embodiment, base width adjusters **150** may comprise flaps or tabs coupled to thigh support areas **140**. In the illustrated embodiment, base width

adjusters **150** are coupled to a respective thigh support areas **140** by virtue of being part of the same thigh support straps. However, other configurations may also be used. In any event, base width adjusters **150** can be selectively coupled to waist belt **115** to couple thigh support areas **140** of main body **110** to waist belt **115**.

Base width adjusters **150** can be used to adjust the width of the base of main body **110** where it connects to waist belt **115**. A fastening mechanism **151** of base width adjusters **150**, such as a hook and loop material, buttons, snaps, zipper, etc., can cooperate with a corresponding fastening mechanism **117** on waist belt **115** to couple thigh support areas **140** to waist belt **115**. The fastening mechanisms **117**, **151** are configured such that the base width adjusters **150** may be coupled to the waist belt **115** in multiple positions or throughout a range of positions.

The width of bucket seat **125** proximate to waist belt **115** can be adjusted by changing the position at which base width adjusters **150** are secured to waist belt **115**. For example, moving the bottom ends of base width adjusters **150** laterally inboard (rotating base width adjusters **150** inward) decreases the width of main body **110** at the point main body **110** meets waist band **115** and may serve to decrease the width of the bucket seat where thigh support areas **140** pass under the child's thighs. Moving the ends of base width adjusters **150** more laterally outboard (rotating base width adjusters **150** laterally outward) increases the width of the main body **110** where it is coupled to the waist belt **115** and may increase the bucket seat width where the thigh support areas **140** pass under the child's thighs.

Base width adjusters **150** can be used to control the depth of the bucket seat **125**. In a minimum (or narrowest) base width setting the base width adjusters **150** may be fastened to the waist belt **115** such that they are maximally proximate one another toward the center axis of the waist belt **115** (given the range or number of positions possible). In this minimum base width setting carrier **100** is configured such that the depth of the seat bucket **125** may be at a maximum. In a maximum (or widest) base width setting, the base width adjusters **150** may be fastened to the waist belt **115** such that they are maximally distal one another away from the center axis of the waist belt **115** (given the range or number of positions possible). In this maximum (or widest) base width setting, carrier **100** is configured such that the depth of the bucket seat **125** may be at a minimum.

Bucket seat portion **120** may include one or more shaping members to facilitate shaping the bucket seat. In one embodiment, bucket seat portion **120** includes gusset portions **170** that span the gap between the respective inner edges **146**, **148** of thigh support areas **140** and the laterally outer edges **126**, **128** of seat center portion **122**. Gusset portions **170** may be fastened to seat center portion **122** at or proximate to laterally outer edges **126**, **128** and to thigh support areas at or proximate to laterally inner edges **146**, **148** to form a first dart having a dart apex **174** generally pointing toward the bottom of the bucket seat **125** and dart legs defined by the connections at or proximate to edges **126**, **146** and a second dart having a dart apex **175** and dart legs defined by the connections at or proximate to edges **128**, **148**. The dart legs can be closed or opened to gather or release the darts. In particular, by adjusting base width adjusters **150** to decrease the angle between seat center portion **122** and thigh support areas **140**, the dart legs can be closed and darts deepened. Consequently, bucket seat **125** can bulge further and take on a deeper curve. Conversely, adjusting base width adjusters **150** to increase the angle between seat center portion **122** and thigh support areas **140** opens the dart legs and makes the darts formed by gusset portions **170** shallower. Consequently, the bucket seat **125** formed by carrier **100** will be shallower. While, in the above embodiment, the shaping members are darts, other shaping mechanisms can be used to control the fullness of bucket seat **125** including, but not limited to pleats, gathers or tucks.

Referring briefly to FIGS. **3**A, **3**B and **3**C (collectively FIG. **3**), FIG. **3** illustrates the operation of one embodiment of base width adjusters **150**. In FIG. **3**, the base width adjusters **150** can be secured to waist belt **115** to either side of the lateral centerline of main body **110** to adjust the width of carrier **100** at thigh support areas **140**. In the embodiment illustrated, hook and loop material is used to secure the base width adjusters **150** to waist belt **115** on the side of waist belt **115** sandwiched between waist belt **115** and the wearer. This can increase the hold of the hook and loop material when in use because of the pressure against the base width adjusters **150**.

In the embodiment of FIG. **3**, each base width adjuster **150** is secured to waist belt **115** in one of three positions **154**, **156**, **158**. These positions may correspond to particular size ranges of children. In FIG. **3**A, base width adjusters **150** are secured at positions **154** corresponding to a minimum (or narrowest) base width setting. In FIG. **3**B, base width adjusters **150** are secured at positions **156** corresponding to a moderate base width setting. In FIG. **3**C, base width adjusters **150** are secured at positions **158** corresponding to a maximum (or widest) base width setting.

It can be noted that base width adjusters **150** as illustrated essentially rotate from a pivot point as they are adjusted. Thus, not only does the lateral position of the attachment position change, the vertical position does as well (e.g., positions **154**, **156** and **158** for a base width adjuster **150** are both laterally and vertically displaced from each other). The use of a rotational motion like this provides a greater change in bucket depth for a given lateral change. Other embodiments, however, could use a more linear motion (e.g., in which the attachment positions are horizontally aligned). Furthermore, positions **154**, **156** and **158** are provided by way of example. In the embodiment illustrated, base width adjusters **150** can be coupled to fastening mechanism **117** in a continuous range of positions. Other embodiments may provide discrete attachment points.

Referring to FIG. **3**A, base width adjusters **150** are fastened to the waist belt **115** such that they are maximally proximate one another toward the center axis of the waist belt **115** (given the range or number of positions possible). However, because laterally inner edges **146**, **148** of thigh support areas **140** are drawn close to laterally outer edges **126**, **128** (hidden by gusset portion **170**) of seat center support part **122**, gusset portions **170** form deeply curved darts. Put another way, by fastening base width adjusters **150** to waist belt **115** such that they are maximally proximate one another, the laterally outer edges of gusset portions **170** may be drawn toward the laterally inner edges of gusset portions **170**, creating a corresponding greater curve or dart shapes in gusset portions **170**. This serves to shape bucket seat portion **120** to increase the depth of the bucket seat portion.

Referring to FIG. **3**C, the base width adjusters **150** are secured at positions **158** corresponding to a maximum (or widest) base width setting. In this configuration, the laterally inner edges **146**, **148** are rotated away from the respective laterally outer edges **126**, **128** of FIG. **3**C. In other words, the dart legs are opened to release the darts and create less shape (curve) at the end of the gusset portions **170**. By fastening base width adjusters **150** to waist belt **115** such that they are maximally distal one another (again, given the range of

possible setting for coupling base width adjusters **150** to waist belt **115**), tension may be maintained on outer edges of gusset portions **170** such that gusset portions **170** remain relatively flat. As such, bucket seat portion **120** may be maintained in a relatively flat or less shaped configuration, serving to minimize the depth of the bucket seat **125**.

Base width adjusters **150** primarily adjust the width of the seat proximate to waist belt **115**. However, moving away from waist belt **115**, the seat (edges **142**, **144**) may flare out. With reference to FIG. **2**, thigh width adjusters **160** may be provided to adjust the width of the seat away from waist belt **115**. In particular, thigh width adjusters **160** may be adapted to adjust the width of the bucket seat where edges **142**, **144** of thigh supports **140** pass under the child's thighs. Thigh width adjusters **160** can be used to pull in thigh support areas **140** so that thigh support areas **140** do not extend past the child's knee and thus prevent thigh support areas **140** from straightening the child's legs or overspreading the child's legs.

In certain embodiments, thigh width adjusters **160** may be coupled to respective thigh support areas **140** and are configured to adjust the width of the carrier at the level of thigh support areas **140**. In accordance with one embodiment, each thigh width adjuster **160** may be a piece of material(s) (webbing or other material) that is coupled at a first end **162** to the respective thigh support area **140** proximate to support portions **141** and includes a second end that can be selectively coupled to main body **110** (e.g., to seat center portion **122** or elsewhere). The thigh width adjusters **160** can act as a drawstring system, one on each side, to adjust the width of carrier **100** at thigh level by pulling the thigh support areas **140** laterally inward and thereby further adjusting the width of carrier **100** at the child's thighs.

Referring briefly to FIGS. **4**A, **4**B and **4**C (collectively FIG. **4**) and FIGS. **5**A and **5**B (collectively FIG. **5**), the operation of one embodiment of thigh width adjusters **160** is illustrated. Thigh width adjusters **160** can be selectively coupled to bucket seat portion **120** to pull thigh support areas **140** laterally inward a desired amount. FIG. **4**, for example, illustrates the thigh width adjuster **160** secured in three positions corresponding to a narrowest (tightest) setting (FIG. **4**A, FIG. **5**A), a moderate setting (FIG. **4**B) and a widest (loosest) setting (FIG. **4**C, FIG. **5**B).

In the embodiment illustrated, each thigh width adjuster **160** includes a strip of material that is fastened at first end **162** to the outside of a respective thigh support area **140** proximate to the thigh padding **141** (e.g., near the respective outer edge **142**, **144**). The thigh width adjuster **160** runs laterally inboard through a fabric tunnel **172** to a distal portion **164** that includes a plurality of spaced thigh width adjuster fasteners **166** (e.g., snaps, buttons, hook and loop, etc.) that can be selectively fastened to a corresponding fastener on bucket seat portion **120** of main body **110**.

In FIG. **4**A, the thigh width adjuster fastener **166** that is closest to the respective thigh support area **140** is fastened to the corresponding fastener on the bucket seat portion **120**. This position corresponds to a narrowest thigh width adjuster setting and, as illustrated in FIG. **5**A, thigh support area **140** is gathered inward to decrease the width of carrier **100** at the child's thighs. Conversely, fastening the fastener **166** that is farthest from the respective thigh support area **140** to bucket seat portion **120**, as shown in FIG. **4**C, may achieve the widest setting of the thigh width adjusters **160**. When the thigh width adjusters **160** are in the widest setting position of FIG. **4**C, the outer edges of the thigh support areas **140** can spread out as illustrated in FIG. **5**B, thus widening carrier **100** at the child's thighs.

As can be understood from the foregoing, the base width adjusters **150** and the thigh width adjusters **160** may work in cooperation to adjust the carrier **100**. In accordance with one embodiment, base width adjusters **150** can be used for adjustment of seat depth and provide a gross adjustment of seat width, while thigh width adjusters **160** may serve as granular adjustments for width within the range of gross adjustment provided by the base width adjusters **150**. For example, at a particular setting of the base width adjusters **150** of the carrier **100**, the width of the carrier **100** at thigh support areas **140** may be narrowest with the thigh width adjusters **160** at their smallest or narrowest (tightest) setting and largest with the thigh width adjusters **160** at their widest (loosest) setting.

Carrier **100** may also adjust in height based on other settings of carrier **100**. In particular, adjusting base width adjusters **150** adjusts the wearable back height (length from bottom of bucket seat **125** to top edge **132**). This occurs because the length of the physical carrier material from the top edge **116** of the waist belt **115** at center to the top edge **132** of main body **110** at center remains consistent such that the wearable back height changes depending on the setting of the bucket seat size. A deeper bucket consumes more length of material between edges **116** and **132**, thus leaving less measurement for the wearable height On the other hand, a shallower bucket consumes less length of material between edges **116** and **132**, thus leaving more measurement for the wearable height.

Thus, adjusted to a smallest child mode (e.g., an infant mode) (base width at its smallest/narrowest setting) the bucket seat **125** may be deeper consuming more of the carrier length measurement, thus leaving less measurement for the wearable height (length from bottom of bucket seat **125** to top edge of carrier center panel **123** at center is at its shortest height). Adjusted to a largest child mode (e.g., a toddler mode) (base width at its largest/widest setting) the bucket seat **125** is shallow consuming less of the carrier length measurement, thus leaving more measurement for the wearable height (length from bottom of bucket seat **125** to top edge of carrier center panel **123** at center at its longest height). The carrier thus adjusts to the height of the child based on adjustment to the bucket seat.

Carrier **100** may be adjusted to provide ergonomic support for the child regardless of the size of the child through a supported range. In accordance with one embodiment, carrier **100** can be set for an infant with base width adjusters **150** and thigh width adjusters **160** set at their narrowest settings. In this configuration, the bucket seat will be at its deepest with higher walls at the thigh support areas **140** lifting the child's thighs and knees to a greater angle and into a spread squat position appropriate for that size child. Similarly, carrier **100** can be set for the largest child with the base width adjusters **150** and the thigh width adjusters **160** at their widest settings. In this configuration, the bucket seat may be at its shallowest depth with lower walls at the thigh support areas **140** lifting the child's thighs and knees to a lesser angle and into a spread squat position appropriate for a larger sized child.

Thus, the adjustable bucket seat is configurable in a plurality of configurations having different seat bucket depths and seat bucket widths. The different configurations can be adapted to support a child in a corresponding size range in a spread squat position. For example, in one embodiment, bucket seat can have a first configuration adapted to ergonomically carry a child of 20-24 inches

(generally corresponding to an infant of 0-3 months and over 7 pounds) in a spread squat position appropriate for the infant without requiring an infant insert. Furthermore, the carrier can have a second configuration adapted to ergonomically carry a child of 24-28 inches (generally corresponding to an older baby of 3-9 months) in a spread squat position appropriate for that child's size. In addition, the carrier, in this example, can have a third configuration adapted to ergonomically carry a child of 28 inches or greater (generally corresponding to an older baby or toddler of 9-48 months (up to the carrying capacity of the carrier or the wearer)). The first configuration can correspond to the base width being at the narrowest setting (deepest bucket seat) (an infant mode), the second configuration can correspond to the base width being at a moderate setting and the third configuration can correspond to the base width being at a widest setting (shallowest bucket seat) (a toddler mode). It can be noted that the ranges provided above are provided by way of example and not limitation. Furthermore, the seat may have other configurations.

The user can thus adjust the bucket seat **125** to support the child in an ergonomic spread squat position appropriate for the weight or size of the child with the child's pelvis, bottom and thighs all being supported. The child's weight can be supported so that the child is squatting in the seat rather than sitting with the child's weight primarily on the sacrum. The child can be supported with the knees higher than the bottom, in some cases higher than 90 degrees. The bucket seat **125** can be adjusted to form a sling or pouch that is wider than the child's hips in which the child's bottom is supported. The thigh support areas **140** can be adjusted pass under and around the child's thighs at a distance from the child's hips such that the portions of thigh support areas **140** that pass under and around the child's thighs are higher than the child's bottom to lift the child's knees. The thigh support areas **140** can have sufficient stiffness to encourage the child's thighs to spread by the thigh support straps or wearer's torso.

FIGS. **6**A, **6**B and **6**C (collectively FIG. **6**) are diagrammatic representations of one embodiment of carrier **100** adjusted to accommodate various sized children. FIG. **6**A corresponds to the minimum base width setting of FIG. **3**A, FIG. **6**B corresponds to a moderate base width setting of FIG. **3**B and FIG. **6**C corresponds to the maximum base width setting of FIG. **3**C. Through adjustment of base width adjusters **150** and thigh width adjusters **160**, the width of bucket seat **125** and the depth of bucket seat **125** (indicated by depth **202**) can be configured. Furthermore, because the length of material of carrier **100** available to support the back depends on the depth of bucket seat **125**, adjusting base width adjusters **150** also adjusts the minimum wearable height **204** of carrier **100**. As illustrated in FIG. **6**, the wearable height **204** of carrier **100** increases with decreasing bucket depth.

With all settings set for a small baby, the seat center portion **122**, gusset portions **170** and thigh support areas **140** cooperate to form a deep bucket seat **125** as illustrated in FIG. **6**A. The deep bucket seat **125** with higher walls at the thigh (under the knee) tends to lift the child's knees (indicated by line **210**) to the appropriate spread squat position and promotes rounding of the back into a c-shape (indicated by line **212**). Moreover, a deeper bucket seat **125** shortens the wearable height **204**. Thus, the configuration of FIG. **6**A may be suitable for infants. As the child grows, the child's spine should naturally straighten and the child will require less knee support. Base width adjusters **150** and thigh width adjusters can be adjusted to widen bucket seat **125** and provide additional back support length to support the child's lengthening spine. As shown in FIG. **6**B and FIG. **6**C, for example, carrier **100** the bucket seat **125** may be adjusted to provide less knee lift, but enough to maintain an appropriate spread squat position (e.g., for an older baby in FIG. **6**B and for a toddler in FIG. **6**C) and allow the child to rest with a straighter back.

Returning to FIG. **2**, carrier **100** may also include an adjustable neck support **180**. Adjustable neck support **180** may be extended to increase the center height of carrier **100**, giving additional back or neck support for a child (depending on the size of the child). The neck support **180** may also be folded back away from the wearer to reduce the height of the carrier (e.g., for non-infant children). The neck support **180** may also be folded down toward the wearer such that it may reside inside the child carrying area to give an infant or other child additional head or neck support. The size, shape and position of neck support **180** can be selected so that neck support **180** will fit behind and support the average infant's neck when neck support **180** is folded into the carrier.

Complementary extended position securing mechanisms and complementary non-extended position securing mechanisms such as, but not limited to, buttons, snaps, d-rings and clips or hooks, patches of hook and loop material or other securing mechanism, can be provided so that adjustable neck support **180** can be secured in an extended position or folded back and secured in a non-extended position.

FIGS. **7**A, **7**B and **7**C illustrate one embodiment of adjustable neck support **180** in an inside folded down configuration, an extended configuration and an outside folded down configuration respectively. In the inside folded down position of FIG. **7**A, adjustable neck support **180** can be adapted to partially fill the inside of the carrying area of carrier **100** to give infants with insufficient head control more head and neck support (see also FIG. **6**A). Adjustable neck support **180** can also be configured in the outside folded down configuration of FIG. **7**C to provide additional volume in the carrier as the child grows (see also FIGS. **6**B and **6**C). Neck support **180** can be configured in the extended mode (flipped up) as illustrated in FIG. **7**B to increase the center back length, giving additional back support for toddlers or head and neck support for non-infant babies. Neck support **180** may be positioned according to the size of the child, or other criteria.

According to one embodiment, adjustable neck support **180** may be joined to main body **110** proximate to top edge **132**. The coupling may form a generally horizontal hinge that allows adjustable neck support **180** to flip over edge **132** from the inside folded down configuration to the outside folded down configuration. In the embodiment illustrated, adjustable neck support **180** may be secured in the inside folded down configuration and outside folded down configuration using first set of neck support fasteners **182** and may be secured in the extended configuration using a second set of neck support fasteners **184** located above the first set of neck support fasteners **182**. Preferably, but not necessarily, the neck support fasteners are located on the outside of main body **110**.

With reference again to FIG. **2**, shoulder straps **190** can be configured to form a loop and attach on either side of the lateral centerline of carrier **100**. In other embodiments, shoulder straps may be worn in an "x" configuration. Each shoulder strap **190** may connect to upper torso support portion **130** at one or more locations to pull upper torso support portion **130** toward the wearer. A shoulder strap may also couple to main body **110** of carrier **100** above thigh support areas **140** or other portion of carrier **100** on the same

side, or an opposite side, of the centerline where the shoulder strap **190** is coupled to the upper torso support portion **130**. Shoulder straps **190** may be adjustable and, in some cases, can be re-configured to support multiple carrier positions, such as a front carry, side carry position (hip carry) or back carry position.

Waist belt **115** may have a lumbar support portion **119** and be configured to rest on the wearer's hips. Preferably, the harness is configured so that the child's weight is evenly distributed to the wearer's hips and shoulders and even more preferably such that the child's weight is distributed evenly to the wearer's hips and shoulders and in some cases primarily to the wearer's hips rather than shoulders. In some cases, 70 percent or more of the child's weight can be distributed to the wearer's hips through waist belt **115**, thereby promoting wearer comfort and diminishing wearer fatigue.

In accordance with one aspect of the present disclosure, carrier **100** can be a soft structured carrier that incorporates padding, stitching and fabrics to provide structure. Main body **110**, including upper torso support portion **130**, bucket seat portion **120**, thigh supports **140** and thigh width adjusters **150** can be flexible and can be formed primarily of natural or synthetic fibers without a rigid frame. As would be understood by a person of ordinary skill in the art, however, some components, such as buckles, fasteners, etc. of a soft structured carrier may be formed of hard plastics, metals and the like.

Carrier **100** may include one or more panels formed from a single piece of material or multiple pieces of material, multiple layers of materials, or multiple materials. For example, in some embodiments, upper torso support portion **130** may be formed with an inner layer selected for comfort against a child's skin and an outer layer selected for breathability, fashion, stain resistance, etc. Upper torso support portion **130** may have straight edges, tapered edges for an area of increased width or decreased width, or otherwise configured for comfort or security of a child or a user. Similarly, bucket seat portion **120** may include one or more panels formed from a single piece of material, or may be formed from multiple pieces of material, multiple layers of materials, or multiple materials. The junction between upper torso support portion **130** and bucket seat portion **120** may be a substantially seamless transition. In one embodiment, the center of upper torso support portion **130** and center of bucket seat portion **120** may be formed from a unitary center panel **123** (of one or more layers) attached to side panels that form the laterally outer portions of upper torso support portion **130** and thigh support areas **140**. Inner layers may be selected for comfort against a child's skin and outer layers selected for breathability, fashion, stain resistance, etc. In some embodiments, the center portion may be selected for comfort and lateral portions selected for breathability, security, etc.

It can be noted that carrier **100** may support a number of carrying positions. FIG. **1**, for example, is a diagrammatic representation of one embodiment of an adult wearer carrying a child in an inward facing front carry position. FIG. **8** is a diagrammatic representation of one embodiment of an adult wearer carrying a child in carrier **100** in an inward facing back wearing configuration. FIG. **9** is a diagrammatic representation of one embodiment of an adult wearer carrying a child in carrier **100** in a side (hip) wearing configuration.

As used herein, the terms "comprises," "comprising," "includes," "including," "has," "having" or any other variation thereof, are intended to cover a non-exclusive inclusion. For example, a process, article, or apparatus that comprises a list of elements is not necessarily limited to only those elements but may include other elements not expressly listed or inherent to such process, article, or apparatus. Further, unless expressly stated to the contrary, "or" refers to an inclusive or and not to an exclusive or. For example, a condition A or B is satisfied by any one of the following: A is true (or present) and B is false (or not present), A is false (or not present) and B is true (or present), and both A and B are true (or present). As used herein, a term preceded by "a" or "an" (and "the" when antecedent basis is "a" or "an") includes both singular and plural of such term, unless clearly indicated otherwise (i.e., that the reference "a" or "an" clearly indicates only the singular or only the plural). Also, as used in the description herein and throughout the meaning of "in" includes "in" and "on" unless the context clearly dictates otherwise.

Additionally, any examples or illustrations given herein are not to be regarded in any way as restrictions on, limits to, or express definitions of, any term or terms with which they are utilized. Instead, these examples or illustrations are to be regarded as being described with respect to one particular embodiment and as illustrative only. Those of ordinary skill in the art will appreciate that any term or terms with which these examples or illustrations are utilized will encompass other embodiments which may or may not be given therewith or elsewhere in the specification and all such embodiments are intended to be included within the scope of that term or terms. Language designating such nonlimiting examples and illustrations include, but is not limited to: "for example," "for instance," "e.g.," "in one embodiment."

Reference throughout this specification to "one embodiment", "an embodiment", or "a specific embodiment" or similar terminology means that a particular feature, structure, or characteristic described in connection with the embodiment is included in at least one embodiment and may not necessarily be present in all embodiments. Thus, respective appearances of the phrases "in one embodiment", "in an embodiment", or "in a specific embodiment" or similar terminology in various places throughout this specification are not necessarily referring to the same embodiment. Furthermore, the particular features, structures, or characteristics of any particular embodiment may be combined in any suitable manner with one or more other embodiments. It is to be understood that other variations and modifications of the embodiments described and illustrated herein are possible in light of the teachings herein and are to be considered as part of the spirit and scope of the invention.

In the description herein, numerous specific details are provided, such as examples of components and/or methods, to provide a thorough understanding of embodiments of the invention. One skilled in the relevant art will recognize, however, that an embodiment may be able to be practiced without one or more of the specific details, or with other apparatus, systems, assemblies, methods, components, materials, parts, and/or the like. In other instances, well-known structures, components, systems, materials, or operations are not specifically shown or described in detail to avoid obscuring aspects of embodiments of the invention. While the invention may be illustrated by using a particular embodiment, this is not and does not limit the invention to any particular embodiment and a person of ordinary skill in the art will recognize that additional embodiments are readily understandable and are a part of this invention.

It will also be appreciated that one or more of the elements depicted in the drawings/figures can also be implemented in a more separated or integrated manner, or even removed or

rendered as inoperable in certain cases, as is useful in accordance with a particular application. Additionally, any signal arrows in the drawings/Figures should be considered only as exemplary, and not limiting, unless otherwise specifically noted.

The representative embodiments, which have been described in detail herein, have been presented by way of example and not by way of limitation. It will be understood by those skilled in the art that various changes may be made in the form and details of the described embodiments resulting in equivalent embodiments that remain within the scope of the appended claims.

The invention claiemd is:

1. An adjustable child carrier for supporting a child by a user, the adjustable child carrier comprising:

a body configured to support the child,

wherein the body forms a bucket seat configured to support legs of the child;

a neck support comprising a first neck support attachment and a second neck support attachment;

a first shoulder strap coupled to the body and configured to extend over a first shoulder of the user;

a second shoulder strap coupled to the body and configured to extend over a second shoulder of the user;

a first attachment disposed on the first shoulder strap and configured to receive the first neck support attachment;

a second attachment disposed on the second shoulder strap and configured to receive the second neck support attachment,

wherein the neck support is configured in an upward neck supporting position when the first neck support attachment is coupled to the first attachment and the second neck support attachment is coupled to the second attachment;

the body forming a first thigh support and a second thigh support;

a first setting, a second setting, and a third setting defined by the adjustable child carrier; and

at least one thigh support adjuster coupled to the first thigh support and the second thigh support,

wherein the at least one thigh support adjuster is configured to be selectively positioned to one of the first setting, the second setting, or the third setting to thereby adjust a length of the body to accommodate various sizes of the child as the child ages,

wherein the length is defined from a bottom of the bucket seat to a top of the body.

2. The adjustable child carrier of claim **1**,

wherein selectively positioning the at least one thigh support adjuster at the first setting adjusts the length of the body to a first length,

wherein selectively positioning the at least one thigh support adjuster at the second setting adjusts the length of the body to a second length greater than the first length,

wherein selectively positioning the at least one thigh support adjuster at the third setting adjusts the length of the body to a third length greater than the second length.

3. The adjustable child carrier of claim **1**, wherein adjustment of the at least one thigh support adjuster adjusts a depth of the bucket seat for the child.

4. The adjustable child carrier of claim **1**,

wherein the first setting is at least partially vertically displaced from the second setting, the second setting is at least partially vertically displaced from the third setting, and the first setting is at least partially vertically displaced from the first setting,

wherein the adjustable child carrier defines the second setting between the first setting and the third setting.

5. The adjustable child carrier of claim **2**,

wherein adjusting the length of the body to the first length configures the adjustable child carrier in an infant mode,

wherein, in the infant mode, the adjustable child carrier is configured to carry the child when the child has a height within a range of 20-24 inches.

6. An adjustable child carrier for supporting a child by a user, the adjustable child carrier comprising:

a body configured to support the child between the body and a torso of the user, wherein the body forms a bucket seat configured to support legs of the child;

a neck support comprising a first neck support attachment and a second neck support attachment;

a first shoulder strap coupled to the body and configured to extend over a first shoulder of the user;

a second shoulder strap coupled to the body and configured to extend over a second shoulder of the user;

a first attachment disposed on the first shoulder strap and configured to receive the first neck support attachment;

a second attachment disposed on the second shoulder strap and configured to receive the second neck support attachment,

wherein the neck support is configured in an upward neck supporting position when the first neck support attachment is coupled to the first attachment and the second neck support attachment is coupled to the second attachment;

the body forming a first thigh support and a second thigh support; at least one thigh support adjuster coupled to the first thigh support and the second thigh support; and

a first position, a second position, and a third position defined by the adjustable child carrier,

wherein the first position corresponds to a first setting, the second position corresponds to a second setting, and the third position corresponds to a third setting,

wherein adjustment of the at least one thigh support adjuster among the first position, the second position, and the third position adjusts a length of the body to configure the adjustable child carrier to one of the first setting, the second setting, or the third setting, the length defined from a bottom of the bucket seat to a top of the body.

7. The adjustable child carrier of claim **6**,

wherein adjustment of the at least one thigh support adjuster from the first position to the second position adjusts the length of the body from a first length to a second length, the second length being greater than the first length,

wherein adjustment of the at least one thigh support adjuster from the second position to the third position adjusts the length of the body from the second length to a third length, the third length being greater than the first length and the second length.

8. The adjustable child carrier of claim **6**, wherein adjustment of the at least one thigh support adjuster adjusts a depth of the bucket seat for the child.

9. The adjustable child carrier of claim **6**,

wherein the first position is at least partially vertically displaced from the second position, the second position is at least partially vertically displaced from the third position, and the first position is at least partially vertically displaced from the first position,

wherein the adjustable child carrier defines the second position between the first position and the third position.

10. The adjustable child carrier of claim **7**,

wherein adjusting the length of the body to the first length configures the adjustable child carrier in an infant mode,

wherein, in the infant mode, the adjustable child carrier is configured to carry the child when the child has a height within a range of 20-24 inches.

11. An adjustable child carrier for supporting a child by a user, the adjustable child carrier comprising:

a body configured to support the

wherein the body forms a bucket seat configured to support legs of the child;

a neck support comprising a first neck support attachment and a second neck support attachment;

a first shoulder strap coupled to the body and configured to extend over a first shoulder of the user;

a second shoulder strap coupled to the body and configured to extend over a second shoulder of the user;

a first attachment disposed on the first shoulder strap and configured to receive the first neck support attachment;

a second attachment disposed on the second shoulder strap and configured to receive the second neck support attachment,

wherein the neck support is configured in an upward neck supporting position when the first neck support attachment is coupled to the first attachment and the second neck support attachment is coupled to the second attachment;

wherein folding the neck support down and away from the user configures the neck support in an outside folded down position, the outside folded down position reducing a length of the body in relation to the upward neck supporting position;

the body forming a first thigh support and a second thigh support;

wherein the body, the first thigh support, and the second thigh support in combination form a seat for the child;

a first setting, a second setting, and a third setting defined by the adjustable child carrier; and

at least one thigh support adjuster coupled to the first thigh support and the second thigh support,

wherein selective positioning of the at least one thigh support adjuster at the first setting, the second setting, or the third setting adjusts the length of the body to accommodate various sizes of the child as the child ages, the length defined from a bottom of the bucket seat to a top of the body.

12. The adjustable child carrier of claim **11**, wherein adjustment of the at least one thigh support adjuster adjusts a depth of the bucket seat for the child.

13. The adjustable child carrier of claim **11**,

wherein the first setting is at least partially vertically displaced from the second setting, the second setting is at least partially vertically displaced from the third setting, and the first setting is at least partially vertically displaced from the first setting,

wherein the adjustable child carrier defines the second setting between the first setting and the third setting.

14. The adjustable child carrier of claim **11**,

wherein selectively positioning the at least one thigh support adjuster at the first setting adjusts the length of the body to a first length,

wherein selectively positioning the at least one thigh support adjuster at the second setting adjusts the length of the body to a second length greater than the first length,

wherein selectively positioning the at least one thigh support adjuster at the third setting adjusts the length of the body to a third length greater than the second length.

15. The adjustable child carrier of claim **11**, wherein the seat is configured to support the child in a spread squat position.

16. The adjustable child carrier of claim **1**,

wherein positioning the at least one thigh support adjuster at the second setting at least partially obscures the first setting,

wherein positioning the at least one thigh support adjuster at the third setting at least partially obscures the second setting.

17. The adjustable child carrier of claim **6**,

wherein adjustment of the at least one thigh support adjuster to the second position at least partially obscures the first position and adjustment of the at least one thigh support adjuster to the third position at least partially obscures the second position.

18. The adjustable child carrier of claim **11**,

wherein positioning the at least one thigh support adjuster at the second setting at least partially obscures the first setting and positioning the at least one thigh support adjuster at the third setting at least partially obscures the second setting.

19. The adjustable child carrier of claim **1**, wherein the bucket seat is configured to support the child in a spread squat position.

20. The adjustable child carrier of claim **6**, wherein the bucket seat is configured to support the child in a spread squat position.

21. The adjustable child carrier of claim **5**,

wherein adjusting the length of the body to the third length configures the adjustable child carrier in a toddler mode,

wherein, in the toddler mode, the adjustable child carrier is configured to carry the child when the child has a height of at least 28 inches.

22. The adjustable child carrier of claim **10**,

wherein adjusting the length of the body to the third length configures the adjustable child carrier in a toddler mode,

wherein, in the toddler mode, the adjustable child carrier is configured to carry the child when the child has a height of at least 28 inches.

23. The adjustable child carrier of claim **14**,

wherein adjusting the length of the body to the first length configures the adjustable child carrier in an infant mode,

wherein, in the infant mode, the adjustable child carrier is configured to carry the child when the child has a height within a range of 20-24 inches.

24. The adjustable child carrier of claim **23**,

wherein adjusting the length of the body to the third length configures the adjustable child carrier in a toddler mode,

wherein, in the toddler mode, the adjustable child carrier is configured to carry the child when the child has a height of at least 28 inches.

25. The adjustable child carrier of claim **1**,

wherein each of the first setting, the second setting, and the third setting is a discrete location on the child

carrier at which the user selectively positions the at least one thigh support adjuster.

26. The adjustable child carrier of claim **6**,

wherein each of the first position, second position, and third position is a discrete location on the child carrier at which the user adjusts the at least one thigh support adjuster to the first setting, the second setting, and the third setting.

27. The adjustable child carrier of claim **11**,

wherein each of the first setting, the second setting, and the third setting is a discrete location on the child carrier at which the user selectively positions the at least one thigh support adjuster.

28. The adjustable child carrier of claim **1**,

wherein each of the first setting, the second setting, and the third setting is visible to the user for the selective positioning of the at least one thigh support adjuster.

29. The adjustable child carrier of claim **6**,

wherein each of the first position, the second position, and the third position is visible to the user for the adjustment of the at least one thigh support adjuster.

30. The adjustable child carrier of claim **11**,

wherein each of the first setting, the second setting, and the third setting is visible to the user for the selective positioning of the at least one thigh support adjuster.

* * * * *