NOTIFICATION OF INVENTION

published pursuant to Section 31 of Act 527 of the Collected Statutes for the year 1990

(19)

Czech Republic

[emblem]

Industrial Property Office

(22) **Notified July 2, 2010**

(40) Date of intervention publication: **January 11, 2012**

(Bulletin no. 2/2012)

(21) Document number:

2010-531

(13) Type of document: A3

(51) [Int. Cl.]:

A47D 13/02 (2006.01)

A45F 3/14 (2006.01)

(71) Notifier:

Kalouskova Vera Mgr., Smirice, Czech Republic

(72) Originator:

Kalouskova Vera Mgr., Smirice, Czech Republic

(74) Representative:

Jan Brykner, Resslova 741, Hradec Kralove 50002

(54) Intervention notification title

Child carrier

(57) Annotation:

The child carrier is made up of a fixing and carrying element. The carrying element is made up of a back support (5) and head rest (3). The fixing element is made up of a hip belt (8) and shoulder straps (1), and the fixing element is adjustable at least at one end. The fixing as well as the carrying elements are fitted with safety components (10) to fix the set position of the carrying element on the fixing element. These safety components (10) can be press buttons, buttons, clips, etc.

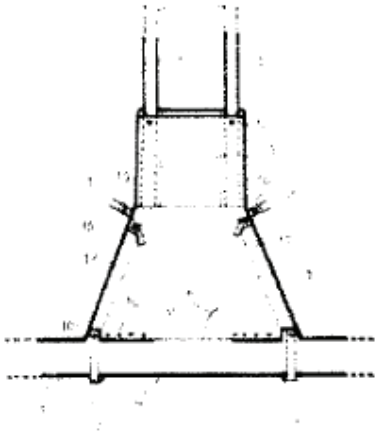

CZ 2010 - 531 A3

07.02.10

PV2010-531

Child carrier

Area of technology

This invention relates to a child carrier for carrying babies and children on the body of the carrying person, whereby the carrier is made up of a fixing element and a weight-bearing element.

The current state of technology

Child care specialists emphasize correct positioning of small children when carried in carriers. They emphasize the need to support the entire length of the back and head and sufficient support of the legs, which should be bent and the fabric should reach from one knee to the other. At present, a range of fabric child carriers is available from birth to approximately three years of age. However, these carriers do not take into account the child's growth or consider it only in a limited manner. The back support has a fixed height and width, and as a consequence, it is often too big for little children and no longer provides sufficient support to big children. Some manufacturers resolve this issue by offering carriers in two size categories, smaller ones for small children and larger ones for toddlers; however, this still results in some difficulties determining the correct size, and the carrier has to be changed as the child grows. To enable the carrying of the smallest babies up to three months, inserts to decrease the size are inserted into these carriers, which are either stitched to it or supplied separately, whereby the size of these inserts is fixed and manipulating these is more challenging for the users. The setting of the seat width in the carrier is resolved with fabric triangles, additionally attached to the sides of the carrier. Thus, the width of the carrier can be set to two predetermined sizes and further extension is not possible. In case of carriers without a brace and a soft hip belt, the height of the back support is regulated by rolling the fabric under in the area of the seat. However, this solution excludes the possibility of the concurrent adjustment of the width of the back support. In case of carriers with a hip belt with a brace, this solution is not possible at all. There as also carriers that allow for extension of the back support using a horizontal zip across the entire width of the back support, which conceals additional fabric. The back support is extended by opening the zip. However, this solution allows setting the height of the back support only to two predetermined sizes; further extension is not possible.

Therefore, the aim of the invention is to execute a child carrier that would allow problem-free regulation of the carrier size, thus developing a carrier that can be regulated based on the child's growth.

The essence of the invention

The aim has been achieved with the child carrier based on the invention, the essence of which lies in the fact that the carrying element, made up of the back support with a head rest that is on a fixing element, made up of the hip belt and shoulder straps, can be adjusted at least on one end, and the fixing

as well as the carrying elements are fitted with safety components to fix the set position of the carrying element on the fixing element.

Due to its advantageous design, the shoulder straps are freely placed in the pocket created on the sides of the head rest, which is part of the back support, whereby the bottom ends of the shoulder straps are stitched to the back support. Thus the head rest can be moved along the shoulder straps and be fixed in the required position with the safety components. The lower part of the head rest is compressed, and this compression ensures the relevant height of the back support with the head rest.

Due to another feature of the advantageous design, the hip belt passes through the eyelets connected to the back support. This way, it is possible make the end of the back support wider or narrower and fix it in position with the safety components. The width of the back support can be continuously adjusted according to the growth and needs of the child.

The eyelets connected to the back support can also be connected with fastening straps that pass through the loops at the sides of the back support and at the ends of the fastening clip. By fastening the fastening straps in the fastening clips, the sides of the back support are compressed and thereby the height of this back support is also lowered. The fastening clip can be used to adjust the compression of the sides of the back support to allow the fabric to provide an optimal support for the child's legs in all positions of the back support width.

The safety components can be made up of press buttons, buttons, clips, etc.

The bottom end of the back support can be fitted with a fastening lace. This enables pulling the excess free fabric together.

Overview of the figures in the sketches

The child carrier based on the intervention is illustrated in the sketches attached. Fig. 1 provides a schematic overview of the open child carrier. Fig. 2 provides a schematic view of the back support with the eyelets and its attachments through these to the hip belt. Fig. 3 shows the attachment of the shoulder straps to the back support and the passing of these shoulder straps through the pockets created on the sides of the head rest.

Example of the execution of the intervention

The child carrier is made up of the fixing element, which includes the hip belt 8, fitted with a cover and cushioned inside, whereby this cushioning is interrupted in the center to allow the compression of the hip belt 8. The attachment of the hip belt 8 itself is then made up of a belt from plastic fibers, fitted with an adjustable buckle. The shoulder straps 1 make up another part of the fixing element; their one end 11 is stitched to the back support 5 and the other end is attached to this back support 5 from the side. Where the shoulder straps 1 pass through the pockets 2, they are fitted with the bottom part of the press button and the top parts of these press buttons are attached to the pockets 2,

whereby these press buttons make up a safety component 10 of the position of the head rest 3 on the shoulder straps 1. The bottom parts of the press buttons 10 are also placed on the hip belt 8 and the top parts of these press buttons are placed on the eyelets 7, through which this hip belt 8 passes. The eyelets 7 are attached to the sides of the back support 5 and loops 17 through which the fastening laces 4 pass are placed along the length of this back support 5; the fastening laces are at one end also connected with the eyelets 7 and their other end is placed in the fastening clips 15.

Adjustment of the required width of the bottom end of the back support 5 is performed by moving the eyelets 7 along the hip belt 8 and they are secured using safety components 10, in this case press buttons. Instead of press buttons, other means, for example buttons, clips, etc., can be used. The bottom parts of these press buttons are placed in a row next to each other on the hip belt 8, and one top part of the press buttons is placed each eyelet 7. During the adjustment of the width of the bottom part of the back support 5 by moving the eyelets 7 along the hip belt, compression 9 of the cover of the hip belt 8 occurs at the location of the seams 6, where there is no cushioning. In the narrowest position, the extra free fabric on the bottom parts of the seat section of the back support 5 is pulled together with a lace 13 and attachment 14. The eyelets 7 are connected with a fastening lace 4, which is fastened in the fastening clip 15, sewn to the bottom part of the head rest 3. By pulling the fastening lace 4, clip 15 pulls the back rest 5 at the loop 17; thus, the height of the back rest is decreased by compression 9. The lowering of the height of the back support 5 can also be performed in the part of the head rest 3, where compression 9 also occurs. The set height of the back rest 5 at the part of the head rest 3 is secured using safety components 10, also made up of press buttons, whereby their lower parts are located in a row on the shoulder straps 1 and one upper part of the press button on the head rest 3, on the side where the pockets 2 are located, through which the shoulder straps 1 pass freely. The shoulder straps 1 as well as the hip belt 8 are fitted with a cover, which contains cushioning on the inside. The back support 5 including the head rest 3 is made up of two layers of fabric. For increased safety and durability, the shoulder straps 1 are inserted between at least two layers of the seat part of the back support 5 and they are fixed there by multiple layers of stitching 11. The upper part of the back support 5 forming the head rest 3 is stitched to the lower seat part of the back support 5.

PATENT REQUIREMENTS

1. A child carrier comprised of a fixing and carrying element is characterized by the carrying element, comprising a back support (5) with a head rest (3), being located on the fixing element, which comprises a hip belt (8) and shoulder straps (1) and is adjustable at least at one end, and the fixing as well as the carrying elements are fitted with safety components (10) to fix the position of the carrying element on the fixing element.

2. The child carrier described in point 1, characterized in that the shoulder straps (1) are freely placed in pockets (2) created on the sides of the head rest (3).

3. The child carrier as described in points 1 or 2, characterized in that the hip belt (8) passing through eyelets (7) is connected to the back support (5).

4. The child carrier in point 3, characterized in that the eyelets (7) connected to the back support (5) are connected through fastening laces (4) passing through loops (17) created on the sides of the back support (5), whereby the ends of these laces (4) are inserted into a fastening clip (15).

5. The child carrier in points 1 to 4, characterized in that the safety components (10) which secure the set position are comprised of press buttons or buttons or clips.

6. The child carrier in points 1 to 5, characterized in that the lower end of the back support (5) is fitted with a fastening lace (13).

PV2010-531

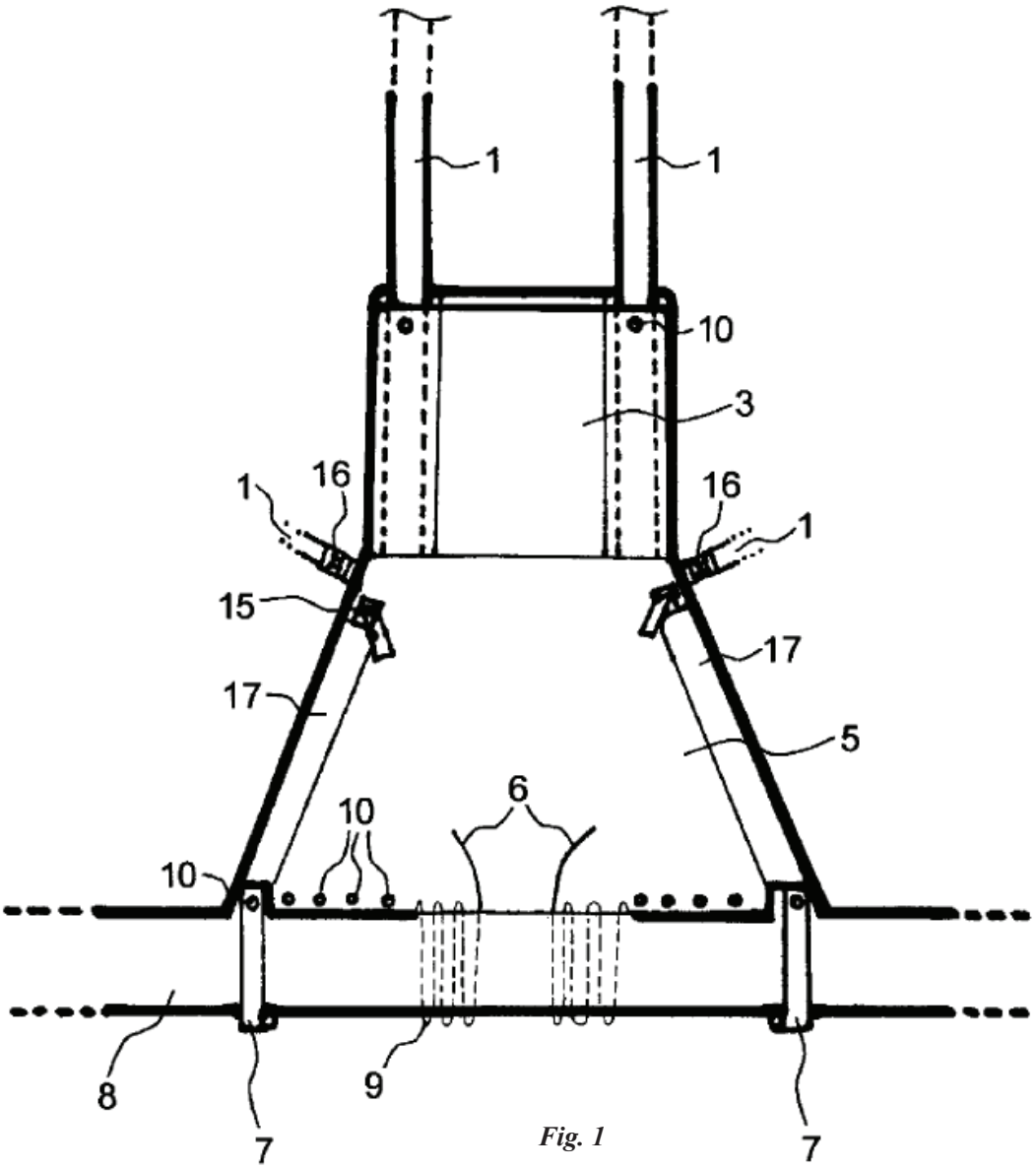

Fig. 1

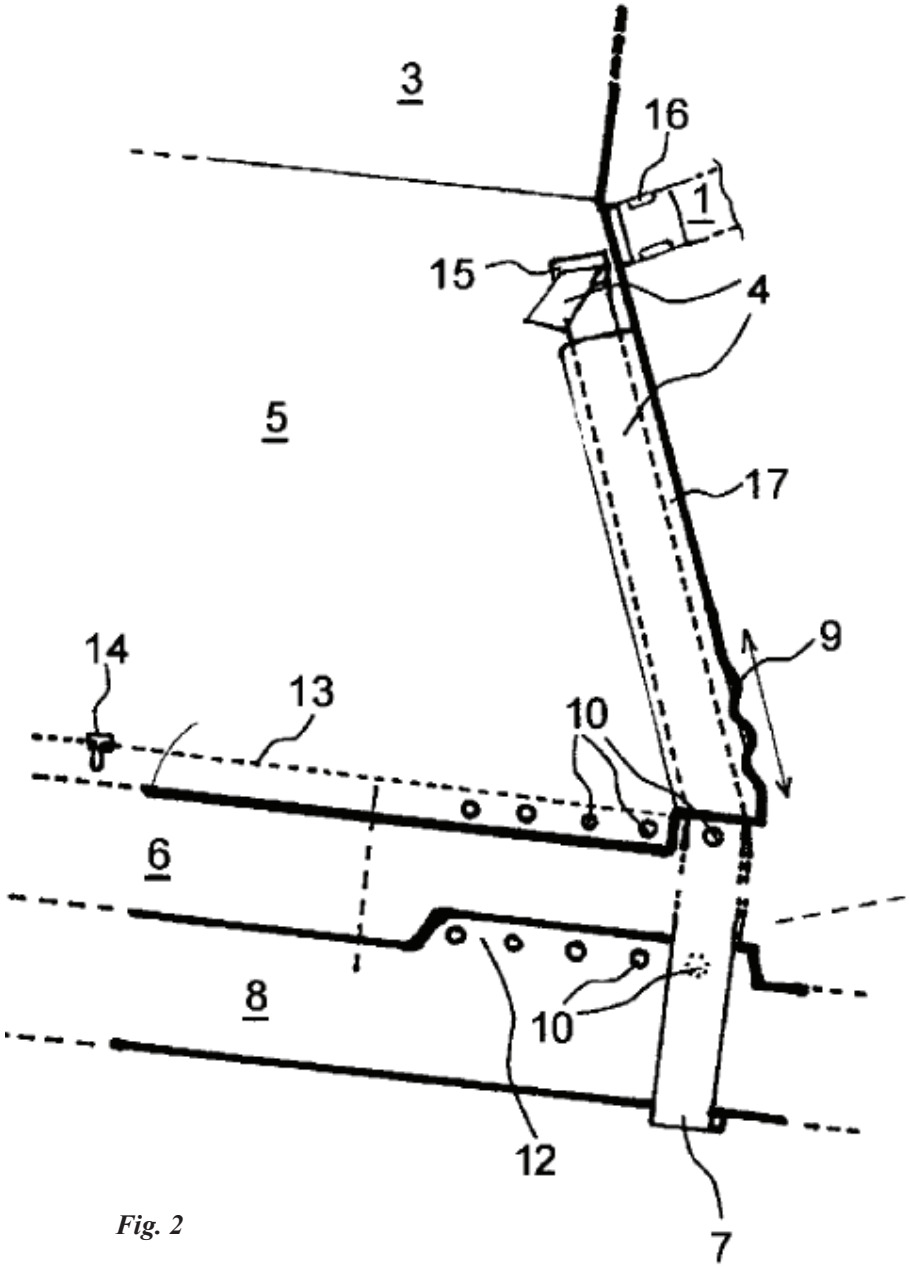

Fig. 2

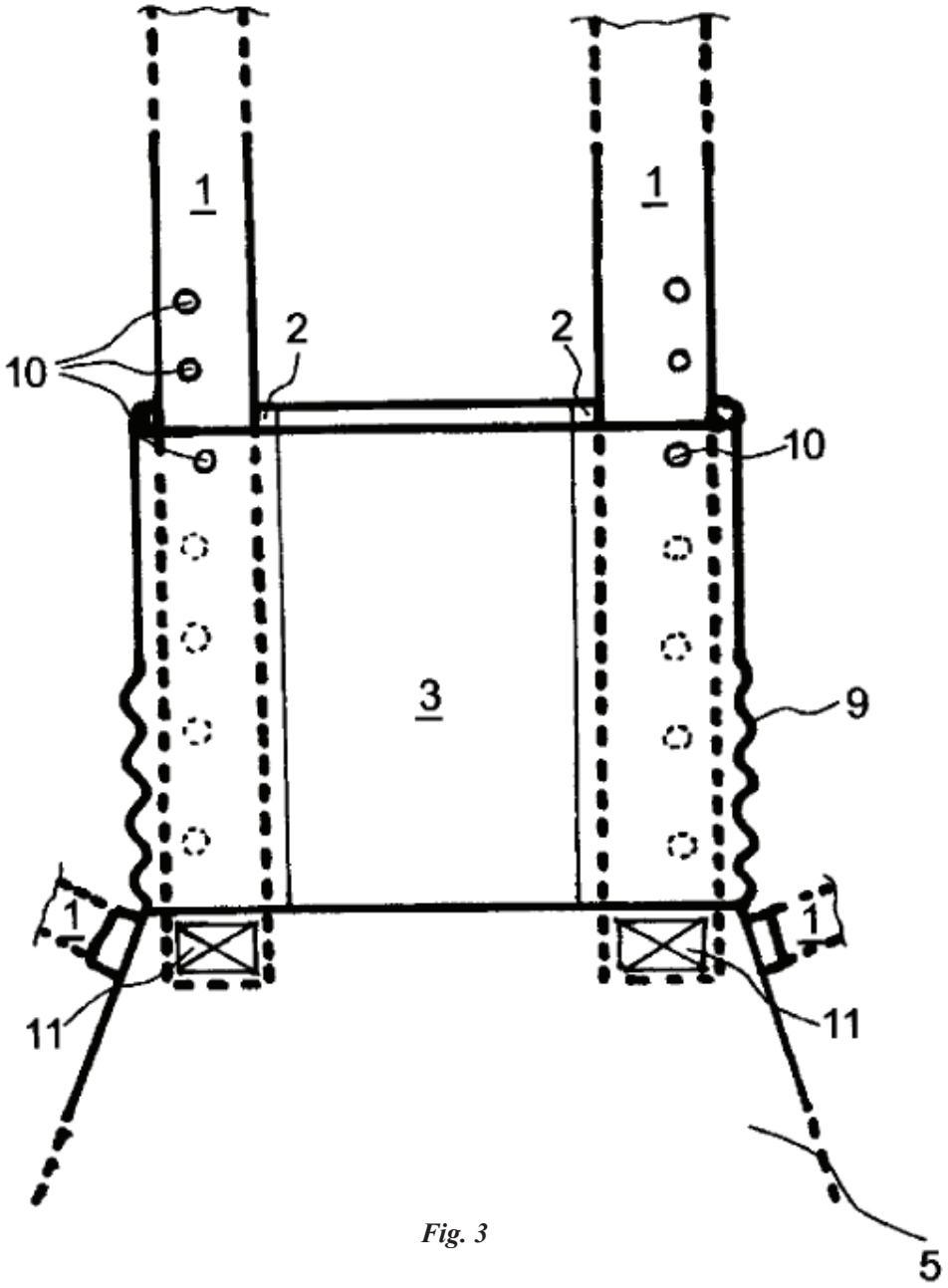

Fig. 3

MORNINGSIDE
A Questel Company

TRANSLATION CERTIFICATION

Date: September 5, 2024

To whom it may concern:

This is to certify that the attached translation is an accurate representation of the documents received by this office. The translation was completed from:

- Czeck

To:

- English

The documents are designated as:

- CZ2010531A3_en-US.docx

Renzo Nunez, Project Manager in this company, attests to the following:

"To the best of my knowledge, the aforementioned documents are a true, full and accurate translation of the specified documents."

Signature of Renzo Nunez