US009185993B2

(12) **United States Patent**
Telford et al.

(10) **Patent No.: US 9,185,993 B2**
(45) **Date of Patent: Nov. 17, 2015**

(54) **CHILD CARRIER**

(71) Applicant: **The ERGO Baby Carrier, Inc.**, Los Angeles, CA (US)

(72) Inventors: **Rodney V. Telford**, Kula, HI (US); **Daruni M. Gotel**, Makawao, HI (US); **Carol J. Lubick**, Kula, HI (US)

(73) Assignee: **The Ergo Baby Carrier, Inc.**, Los Angeles, CA (US)

(*) Notice: Subject to any disclaimer, the term of this patent is extended or adjusted under 35 U.S.C. 154(b) by 28 days.

(21) Appl. No.: **14/209,580**

(22) Filed: **Mar. 13, 2014**

(65) **Prior Publication Data**

US 2014/0263491 A1 Sep. 18, 2014

Related U.S. Application Data

(60) Provisional application No. 61/780,161, filed on Mar. 13, 2013.

(51) **Int. Cl.**
A47D 13/02 (2006.01)

(52) **U.S. Cl.**
CPC ***A47D 13/025*** (2013.01)

(58) **Field of Classification Search**
CPC A47D 13/02; A47D 13/025
USPC 224/158, 159, 160
See application file for complete search history.

(56) **References Cited**

U.S. PATENT DOCUMENTS

3,229,873 A 1/1966 Hershman
3,327,914 A 6/1967 Abram
3,481,517 A 12/1969 Aukerman
4,009,808 A 3/1977 Sharp
4,149,687 A 4/1979 Nunemacher
4,234,229 A 11/1980 Arnold
4,333,591 A 6/1982 Case
D266,800 S 11/1982 Kula et al.
4,402,440 A 9/1983 Purtzer et al.
4,434,920 A 3/1984 Moore

(Continued)

FOREIGN PATENT DOCUMENTS

CA 1332928 11/1994
DE 29519530 U1 4/1996

(Continued)

OTHER PUBLICATIONS

Office Action issued for U.S. Appl. No. 10/937,193, mailed Aug. 14, 2007, 9 pgs.

(Continued)

Primary Examiner — Justin Larson
(74) *Attorney, Agent, or Firm* — Sprinkle IP Law Group

(57) **ABSTRACT**

A child carrier having a waist belt, an upper torso support, a hammock coupled to the waist belt and to the upper torso support, and a thigh support strap extending to each side of the hammock. Each thigh support strap has an inward end portion proximate to the hammock and an outward end portion configured for selective coupling to the upper torso support in multiple positions. When the thigh support straps are coupled to the upper torso support, the hammock and the thigh support straps form a seat to support a child in an ergonomic spread-squat position in inward and outward facing orientations. The shape of the seat adjusts depending on the positions in which the outward end portions of the thigh support straps are coupled to the upper torso support.

19 Claims, 10 Drawing Sheets

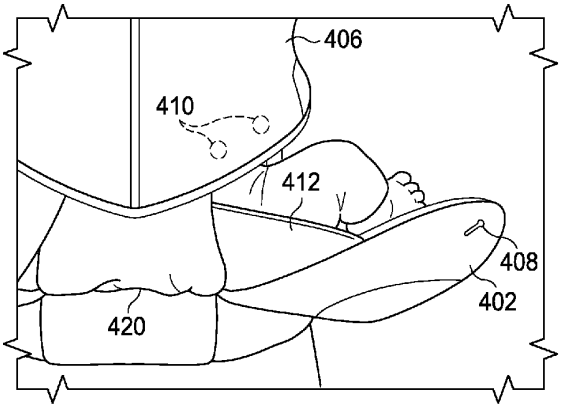

(56) **References Cited**

U.S. PATENT DOCUMENTS

4,467,945	A	8/1984	Schaapveld
4,469,259	A	9/1984	Krich et al.
4,492,326	A	1/1985	Storm
D277,811	S	3/1985	Moore
4,579,264	A	4/1986	Napolitano
4,651,366	A	3/1987	Lande et al.
4,986,458	A	1/1991	Linday
D324,607	S	3/1992	Nelson
D334,253	S	3/1993	Balzarini
5,224,637	A	7/1993	Colombo
5,246,152	A	9/1993	Dotseth
D357,800	S	5/1995	Roan et al.
D370,996	S	6/1996	Shimura et al.
5,570,823	A	11/1996	Lindy
D377,116	S	1/1997	Shimura et al.
D385,105	S	10/1997	Fair
5,673,828	A	10/1997	Raedel et al.
5,678,739	A	10/1997	Darling et al.
5,690,258	A	11/1997	Kataoka et al.
5,692,655	A	12/1997	Fair et al.
D395,161	S	6/1998	Fair et al.
5,791,535	A	8/1998	Roan et al.
D397,867	S	9/1998	Fair et al.
5,813,580	A	9/1998	Fair
5,848,741	A	12/1998	Fair
5,934,528	A	8/1999	Higuchi
D414,032	S	9/1999	Howell
5,988,742	A	11/1999	Stevens
6,055,686	A	5/2000	Knight
6,182,873	B1	2/2001	Christopher et al.
D453,066	S	1/2002	Norman
D455,546	S	4/2002	Norman
6,409,060	B2	6/2002	Donine
6,415,969	B1	7/2002	Higuchi
6,443,339	B1	9/2002	Higuchi
6,499,165	B1	12/2002	Morgillo
6,520,391	B2	2/2003	Yen
D484,685	S	1/2004	Kassai et al.
D486,635	S	2/2004	Yagisawa et al.
6,715,651	B2	4/2004	Le Gal
6,763,983	B2	7/2004	Norman
6,772,925	B2	8/2004	O'Hare
D507,869	S	8/2005	Liistro et al.
D509,056	S	9/2005	Shiraishi et al.
7,168,600	B2	1/2007	Hwang
7,322,498	B2	1/2008	Frost
7,494,031	B2	2/2009	Kassai et al.
7,886,946	B2	2/2011	Gray
8,028,871	B2	10/2011	Gray
8,042,869	B2	10/2011	McClintock et al.
8,127,385	B1	3/2012	Goutevenier
8,272,546	B2	9/2012	Leistensnider
8,453,894	B2	6/2013	Jung et al.
8,579,168	B2	11/2013	Zack et al.
8,590,757	B2	11/2013	Frost
8,636,181	B2	1/2014	Gunter et al.
8,701,949	B1	4/2014	Lehan et al.
9,022,260	B2	5/2015	Frost
2002/0011503	A1	1/2002	Hwang
2002/0175194	A1	11/2002	Norman
2003/0106916	A1	6/2003	Boone
2004/0149790	A1	8/2004	Kassai et al.
2004/0155078	A1	8/2004	Hwang
2004/0238579	A1*	12/2004	Krogh 224/160
2005/0045674	A1	3/2005	Rehbein
2005/0155995	A1	7/2005	Lee
2005/0184114	A1	8/2005	Hoff et al.
2005/0242136	A1	11/2005	Moriguchi et al.
2005/0279785	A1	12/2005	Liistro et al.
2006/0011678	A1	1/2006	Kassai et al.
2006/0076373	A1	4/2006	LaBelle et al.
2006/0130220	A1	6/2006	Morgan et al.
2006/0261104	A1	11/2006	Zambrzycki
2007/0029356	A1	2/2007	Moriguchi et al.
2010/0072236	A1	3/2010	Parness et al.
2010/0147910	A1	6/2010	Schachtner
2011/0062195	A1	3/2011	Jones et al.
2011/0163136	A1	7/2011	Billingham
2011/0290831	A1	12/2011	Wang
2012/0037284	A1	2/2012	Korbonski
2012/0043359	A1	2/2012	Bergkvist et al.
2012/0205406	A1	8/2012	Schachtner
2012/0241487	A1	9/2012	Zack et al.
2014/0097215	A1	4/2014	Caperon
2014/0167462	A1	6/2014	Lai et al.
2015/0208821	A1	7/2015	Frost

FOREIGN PATENT DOCUMENTS

DE	22912951	U1	1/2000
DE	20116046		1/2002
DE	202012104318		11/2012
EP	0046672		3/1982
EP	0662292		7/1995
EP	1055382		11/2000
EP	1707082		10/2006
EP	1765123		6/2011
FR	2806279		9/2001
GB	2028633		3/1980
GB	2314026		12/1987
GB	2260687		4/1993
JP	09099842		10/1995
JP	11046938		2/1999
JP	2003225119		8/2003
JP	2005131146		10/2003
JP	2005185426		12/2003
JP	2004000687		1/2004
JP	2004154468		6/2004
JP	2013118900		6/2011
WO	WO9505952	A1	3/1995
WO	WO0189978	A1	11/2001

OTHER PUBLICATIONS

Office Action issued for U.S. Appl. No. 11/949,324, mailed Oct. 6, 2009, 9 pgs.

Office Action issued for U.S. Appl. No. 11/949,324, mailed Apr. 28, 2010, 9 pgs.

International Search Report and Written Opinion for PCT Application No. PCT/US2004/029614, completed on Feb. 11, 2005, mailed on Mar. 3, 2005, 9 pgs.

International Preliminary Report on Patentability for PCT/US2004/029614, issued on Mar. 13, 2006, 7 pgs.

Examination Report issued in European Application No. 04 783 725.7, mailed Sep. 21, 2007, 3 pgs.

Examination Report issued in European Application No. 04 783 725.7, mailed Sep. 9, 2008, 4 pgs.

Examination Report issued in European Application No. 04 783 725.7, mailed Sep. 10, 2009, 3 pgs.

Examination Report issued in European Application No. 04 783 725.7, mailed Dec. 21, 2009, 5 pgs.

Examination Report issued in European Application No. 04 783 725.7, mailed Jun. 1, 2010, 6 pgs.

Office Action issued in U.S. Appl. No. 11/949,324, mailed Oct. 4, 2010, 10 pgs.

Office Action for U.S. Appl. No. 11/949,324, mailed Jul. 18, 2011, 14 pgs.

Notice of Opposition filed on Mar. 13, 2012, against European Patent No. EP1765123 B1, 213 pages.

Declaration of Judy Petterson regarding BabyTrekker with enclosures 1 and 2, dated May 26, 2011, 18 pages.

Office Action issued for U.S. Appl. No. 14/685,235, mailed May 22, 2015, 8 pgs.

International Search Report and Written Opinion for International Application No. PCT/US2014/026378, mailed Jul. 21, 2014, 9 pgs.

* cited by examiner

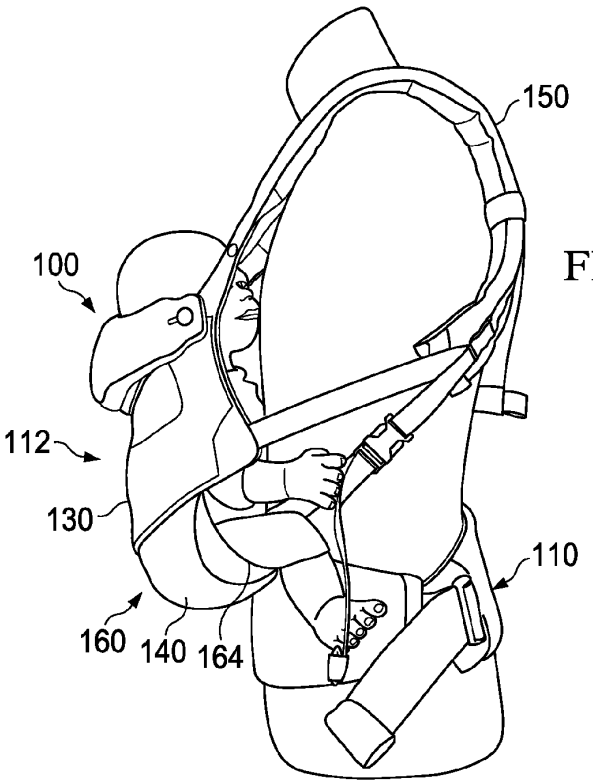
150
100
112
130
110
160
140
164

FIG. 1A

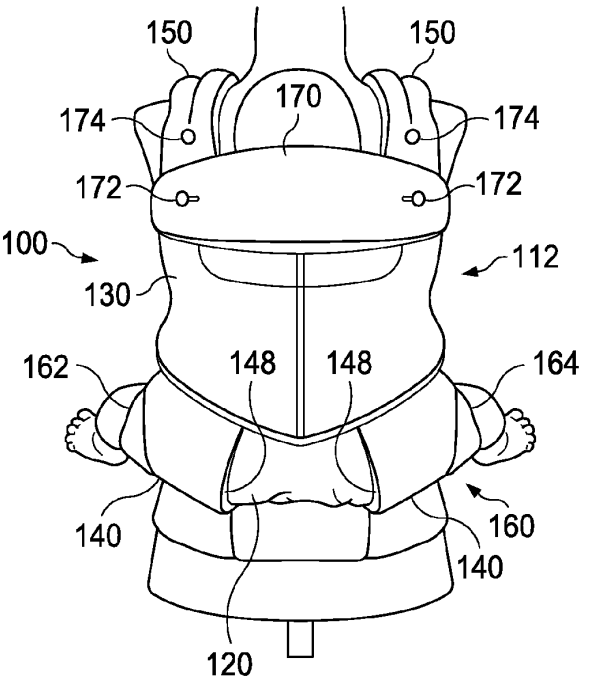
150
150
170
174
174
172
172
100
112
130
162
148
148
164
140
160
140
120

FIG. 1B

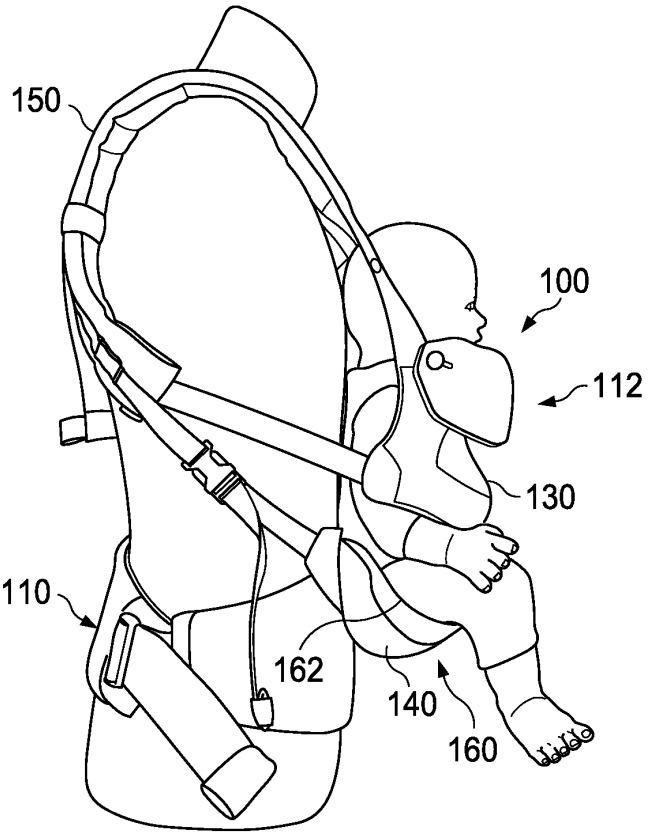

FIG. 1C

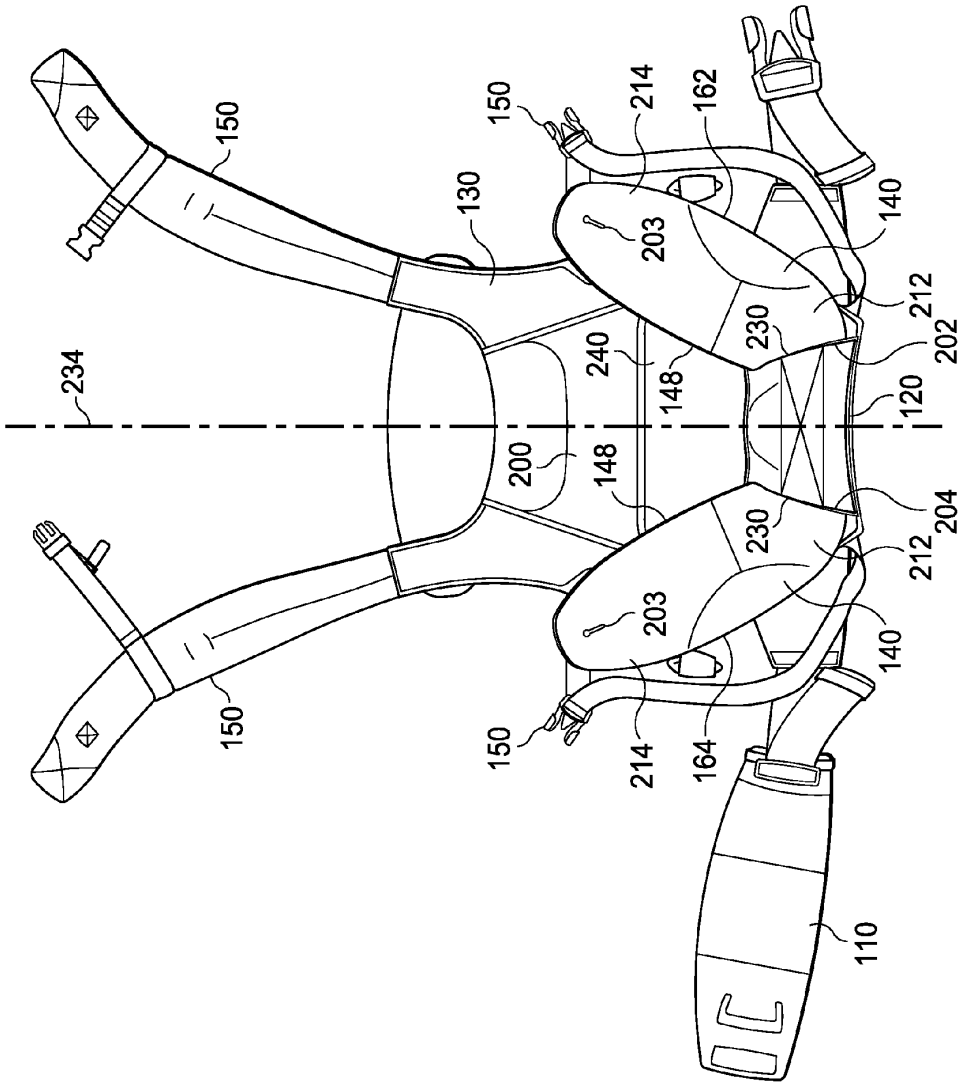
150
130
150
214
162
203
140
212
202
230
240
148
234
120
200
148
204
230
212
203
140
150
150
214
164
110

FIG. 2A

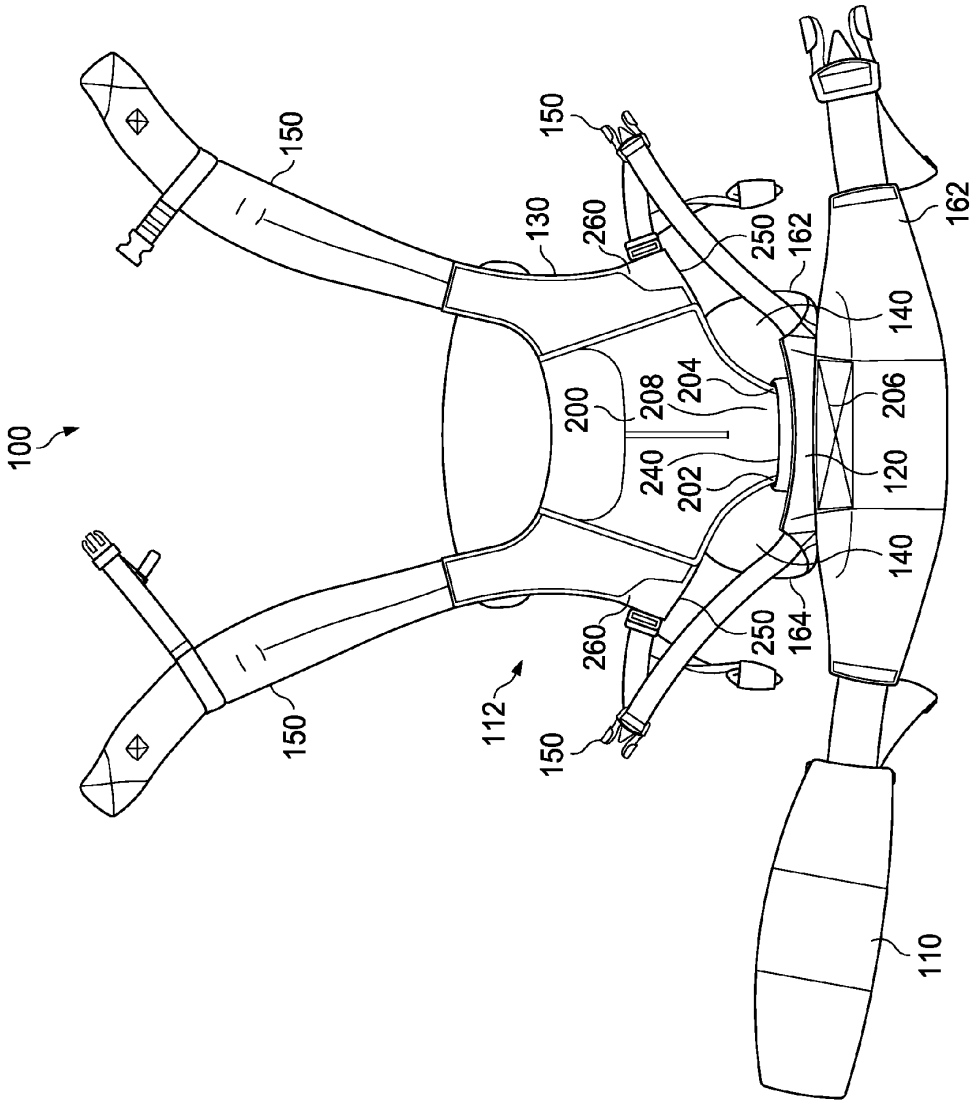
100
150
150
150
150
130
260
260
250
250
162
162
140
140
200
208
204
206
240
202
120
164
112
110

FIG. 2B

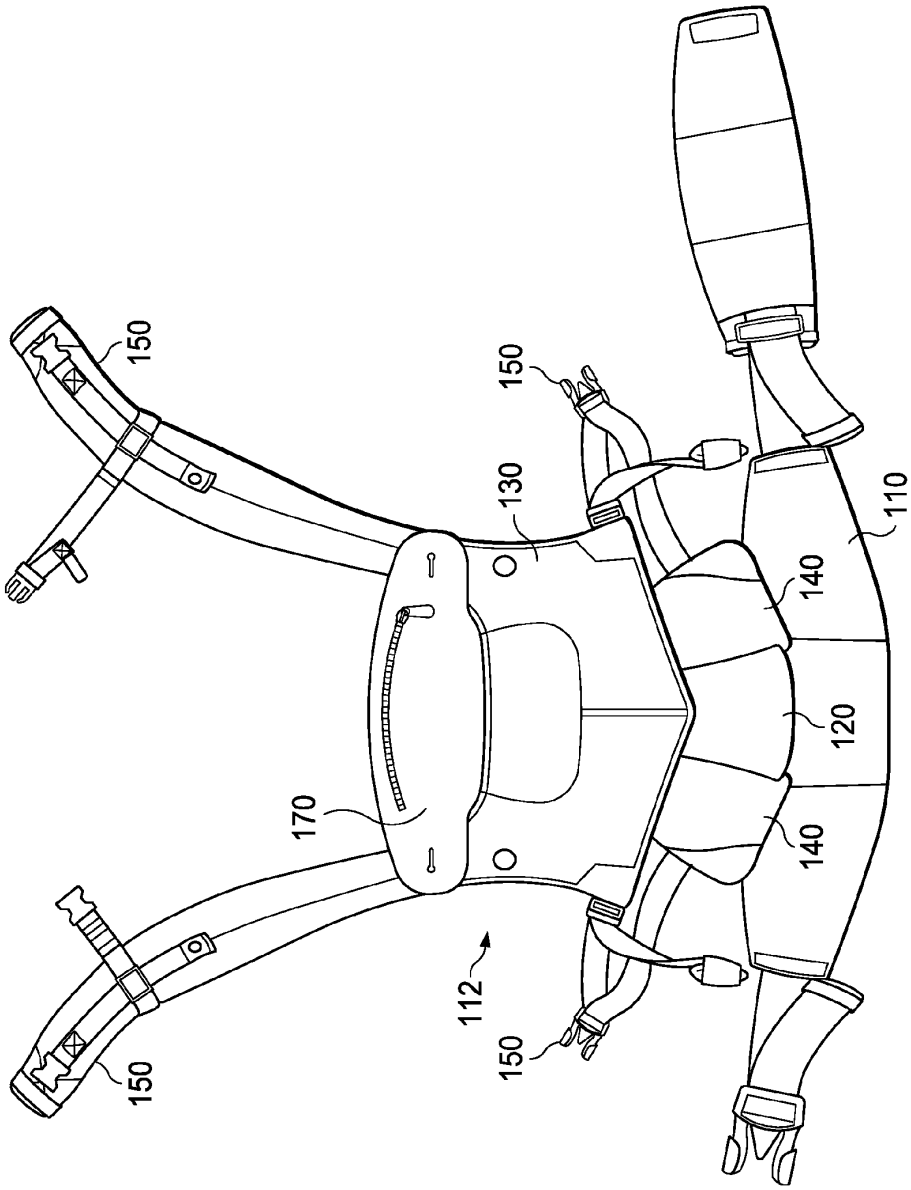

FIG. 2C

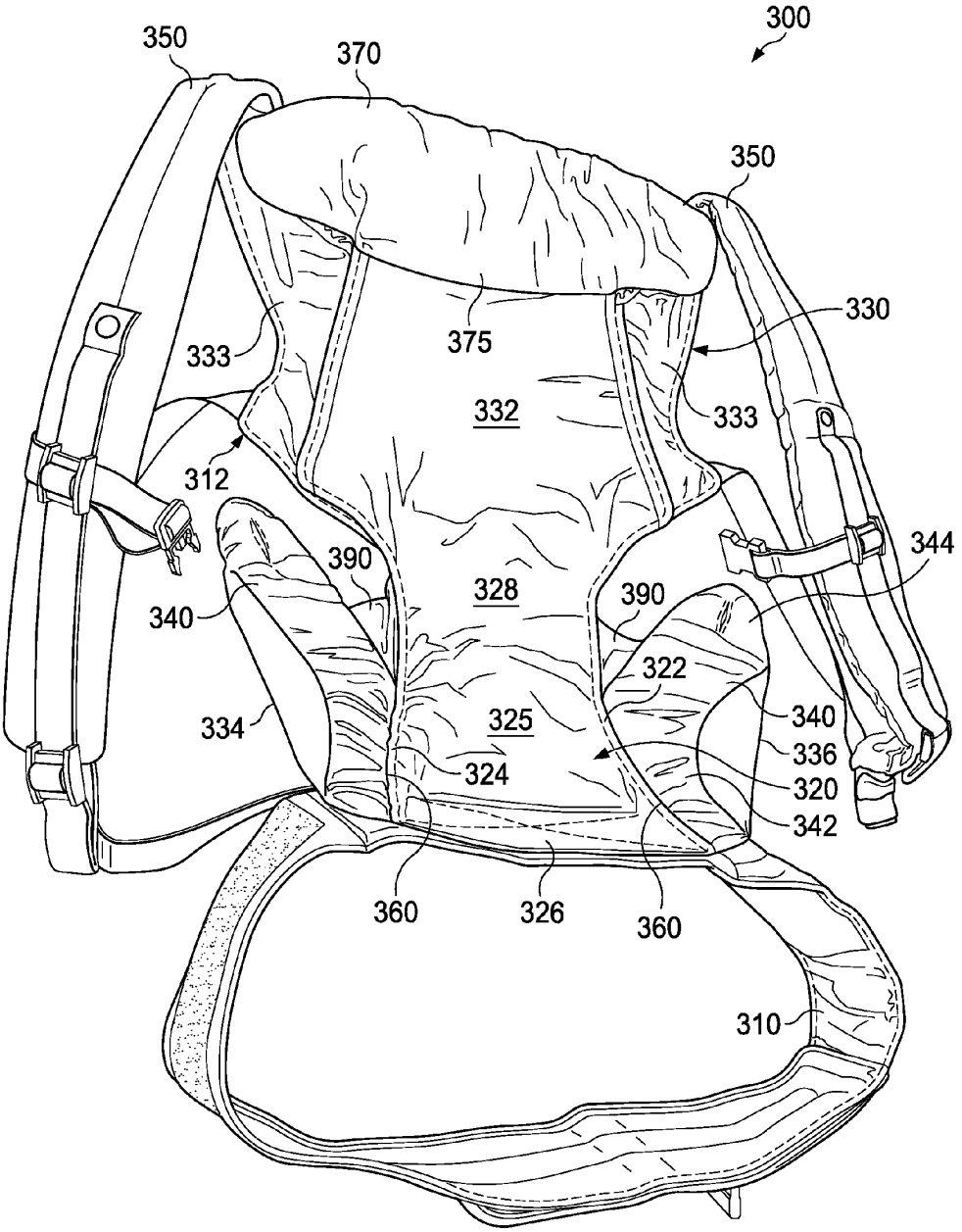
300
350
370
350
330
375
333
332
333
312
344
390
328
390
340
322
334
325
340
336
324
320
342
360
326
360
310

FIG. 3

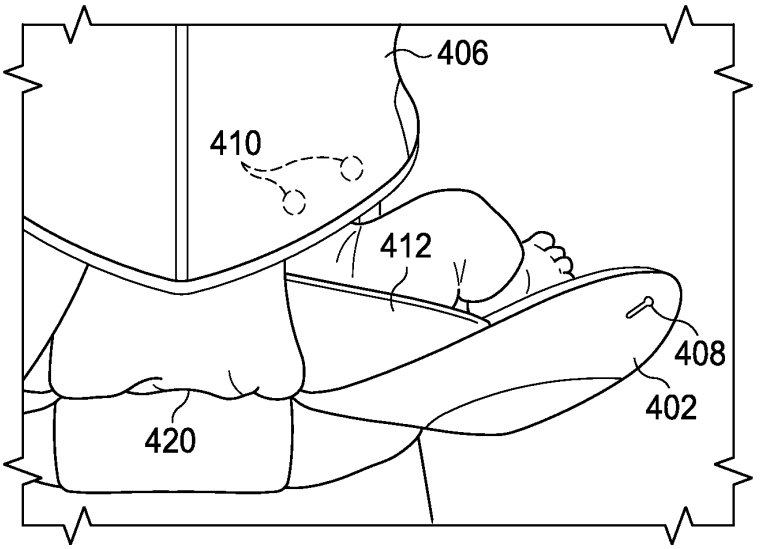

FIG. 4A

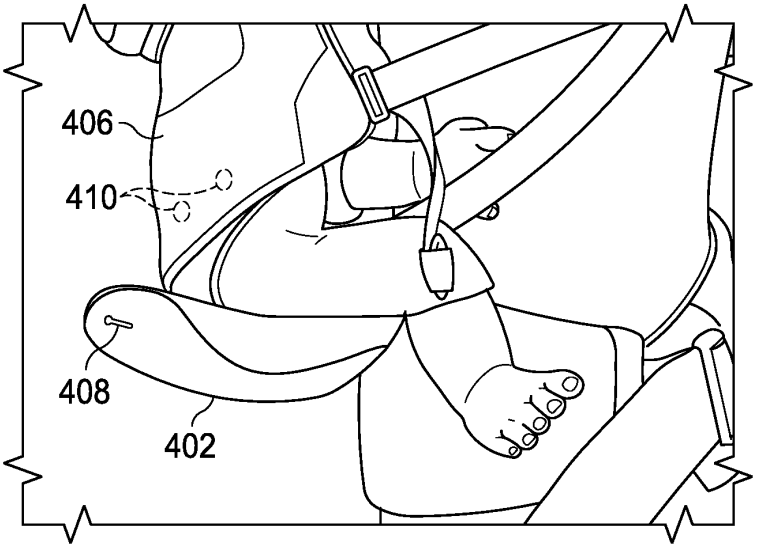

FIG. 4B

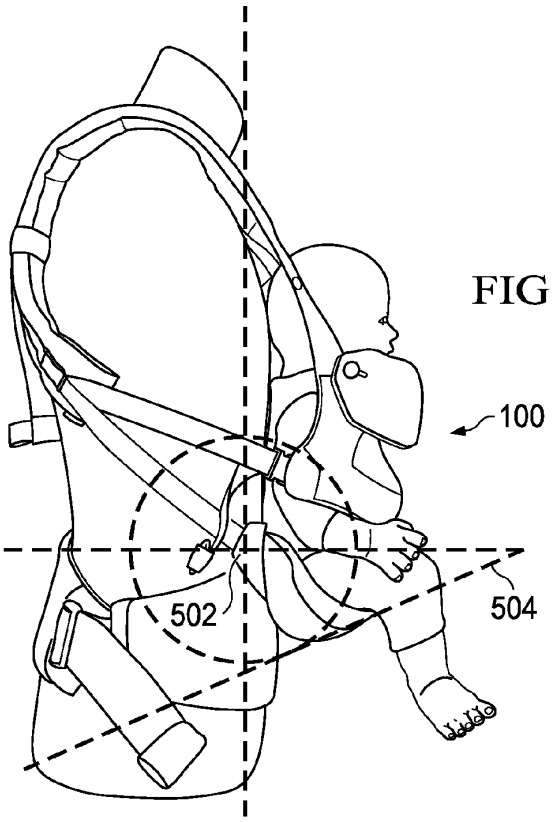

FIG. 5A

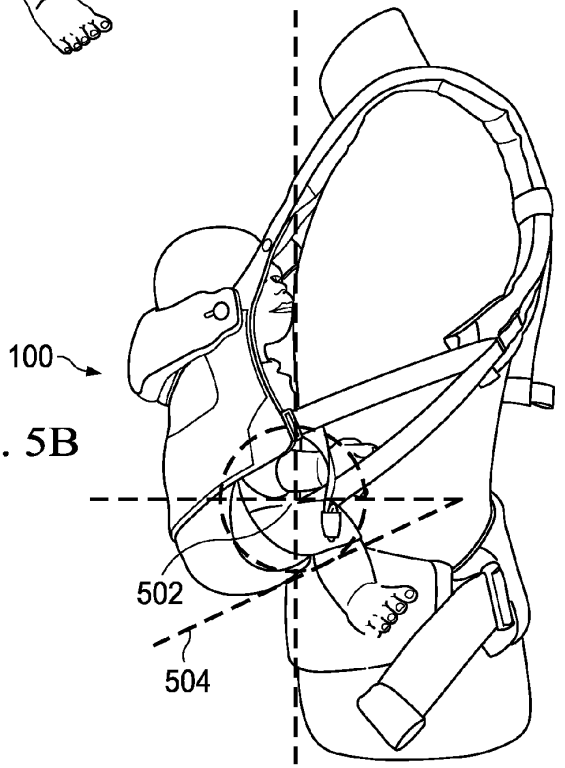

FIG. 5B

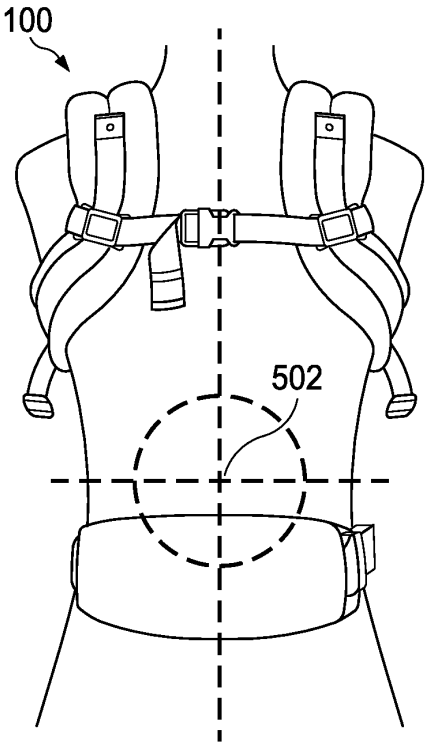

FIG. 5C

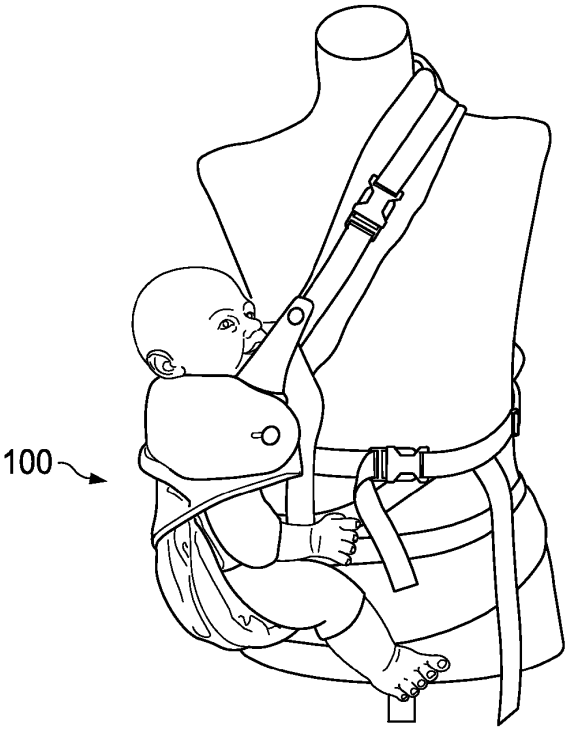

FIG. 6

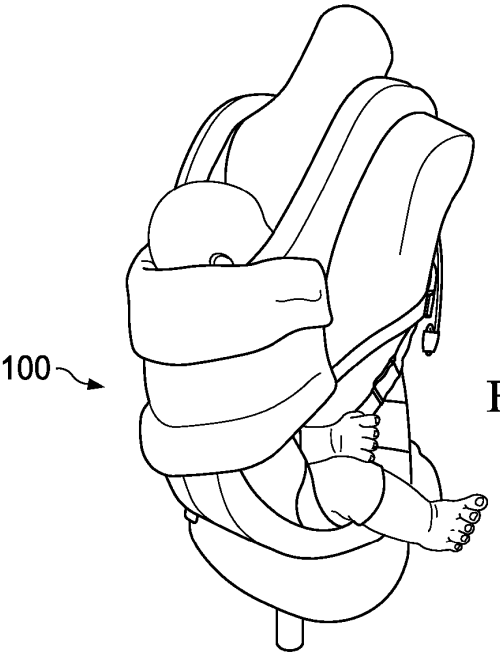

FIG. 7

CHILD CARRIER

RELATED APPLICATIONS

This application claims the benefit of priority under 35 USC §119(e) of U.S. Provisional Patent Application No. 61/780,161, entitled "Infant Carrier," by Gotel et al., filed Mar. 13, 201, which is hereby fully incorporated by reference herein.

TECHNICAL FIELD

The present disclosure relates to child carriers. Even more particularly, the present disclosure relates to systems for ergonomically carrying a child in multiple orientations.

BACKGROUND

Wearable child carriers afford the wearer freedom of hand and arm movement while transporting a child secured in the carrier. Many carriers do not ergonomically support the child, allowing the child's legs to dangle. Furthermore, many carriers provide limited flexibility, only allowing the child to be properly oriented in a single orientation either facing the wearer or looking away from the wearer.

SUMMARY OF THE DISCLOSURE

Embodiments disclosed herein may be directed to a child carrier having a waist belt configured for circumventing the waist of a user, one or more panels forming an upper torso support and a hammock, and a thigh support strap extending to each side of the hammock. Each thigh support strap may have an inward end portion proximate to the hammock and an outward end portion configured for selective coupling to the upper torso support in multiple positions. When the thigh support straps are coupled to the upper torso support, the hammock and the thigh support straps form an adjustable bucket seat to support a child in an ergonomic spread-squat position. The shape of the seat adjusts and depends on the positions in which the outward end portions of the thigh support straps are coupled to the upper torso support. The carrier can be configurable to support the child in an ergonomic spread-squat position in multiple positions, including a back carry position, front carry position and side carry position and multiple orientations including inward facing and outward facing.

In some embodiments, each thigh support strap is sized to wrap around a portion of a child's pelvis, bottom and thigh when the outward end is coupled to the upper torso support. Each thigh support strap can angle laterally outward from the inward end portion to an outward end portion when the outward end portion is not coupled to the upper torso support.

The upper torso support can comprise a plurality of attachment points for each of the thigh support straps. By way of example, but not limitation, the child carrier may include a first plurality of buttons to a first side of a lateral centerline of the upper torso support to which a first of the thigh support straps can selectively couple, and a second plurality of buttons to a second side of the lateral centerline of the upper torso support to which a second of the thigh support straps can selectively couple. The outward end of each thigh support strap can include an opening for receiving a mechanical fastener, such as button, or other fastener on the upper torso support.

In some embodiments, the child carrier may further include a set of shoulder straps, each shoulder strap having a first end coupled to the upper torso support and a second end coupled to the upper torso support. The shoulder straps and waist belt can form a harness that distributes the child's weight evenly to the wearer. In some cases, weight can be distributed so a majority of the child's weight is distributed to the wearer's hips through the waist belt. The carrier can be configurable to be worn by a user in front of, in back of or to the side of the wearer with the child's weight carried near the wearer's center of gravity and close to the wearer's front, back or side in a front, back or side position, respectively.

In another broad aspect, embodiments may be directed to a method of positioning a child in a child carrier. The method may include fastening a waist belt around a waist of a user, positioning a child in a hammock having an inward end portion coupled to the belt and an outward end portion coupled to an upper torso support, wrapping a first thigh support strap under a first thigh of the child and a second thigh support strap under a second thigh of the child, fastening an outward end of the first thigh strap to the upper torso support and an outward end of the second thigh support strap to the upper torso support at selected attachment points from a plurality of attachment points to adjust the shape of the seat formed by the hammock. The first thigh support strap, the second thigh support strap and hammock may form an adjustable bucket seat that supports the child in an ergonomic spread-squat position. In some embodiments, each thigh support strap has a first end coupled to a side of the hammock.

In some embodiments, the method may further include inserting at least one arm into a set of shoulder straps, each shoulder strap having a first end coupled to the upper torso support and a second end coupled to the waist belt the upper torso support. In some embodiments, the child carrier is positioned on a front of the user. In some embodiments, the child is positioned outward facing or inward facing. The carrier seat can be adapted to position the child in an ergonomic "spread-squat-position" that correctly positions the femur in the hip joint, or acetabulum, so that all areas of the acetabulum are strained equally.

The disclosure and various features and advantageous details thereof are explained more fully with reference to the exemplary, and therefore non-limiting, embodiments illustrated in the accompanying drawings and detailed in the following description. Descriptions of known starting materials and processes may be omitted so as not to unnecessarily obscure the disclosure in detail. It should be understood, however, that the detailed description and the specific examples, while indicating the preferred embodiments, are given by way of illustration only and not by way of limitation. Various substitutions, modifications, additions and/or rearrangements within the spirit and/or scope of the underlying inventive concept will become apparent to those skilled in the art from this disclosure.

BRIEF DESCRIPTION OF THE DRAWINGS

The drawings accompanying and forming part of this specification are included to depict certain aspects of the invention. A clearer impression of the invention will become more readily apparent by referring to the exemplary, and therefore nonlimiting, embodiments illustrated in the drawings, wherein identical reference numerals designate the same components. Note that the features illustrated in the drawings are not necessarily drawn to scale.

FIGS. **1**A, **1**B and **1**C are diagrammatic representations illustrating one embodiment of a child carried in a child carrier;

FIGS. **2**A, **2**B and **2**C are diagrammatic representations of one embodiment of a child carrier;

FIG. **3** is a diagrammatic representation of another embodiment of a child carrier;

FIGS. **4**A and **4**B are diagrammatic representations of one embodiment of a portion of a child carrier;

FIGS. **5**A, **5**B and **5**C are diagrammatic representations illustrating an embodiment of wearing a child carrier;

FIG. **6** is a diagrammatic representation of one embodiment of a child carrier in a side carry position; and

FIG. **7** is a diagrammatic representation of one embodiment of a child carrier in a back carry position.

DETAILED DESCRIPTION

Child carriers and related methods and the various features and advantageous details thereof are explained more fully with reference to the nonlimiting embodiments that are illustrated in the accompanying drawings and detailed in the following description. Descriptions of well-known starting materials, processing techniques, components and equipment are omitted so as not to unnecessarily obscure the invention in detail. It should be understood, however, that the detailed description and the specific examples, while indicating preferred embodiments of the invention, are given by way of illustration only and not by way of limitation. Various substitutions, modifications, additions and/or rearrangements within the spirit and/or scope of the underlying inventive concept will become apparent to those skilled in the art from this disclosure.

The present disclosure relates to child carriers that allow a child, including an infant, to be carried in a manner that supports the child and maintains the child's pelvis and thighs in a preferred ergonomic position. Embodiments described herein also allow an child to be carried in an outward facing orientation (i.e., facing away from the person carrying the child) or an inward facing orientation (i.e., facing toward the person carrying the child), and further allow the child to be carried on the front or back or to the side of the person carrying the child. In particular, embodiments described herein provide carriers that support the child's bottom, pelvis and thighs in a desired position in both an outward facing orientation and an inward facing orientation. The carrier can be worn by a user in front of, in back of or to the side the wearer with the child's weight carried near the wearer's center of gravity and close to the wearer's front, back or side in a front, back or side position, respectively.

According to one embodiment, an upper torso support ergonomically supports a child's back or front torso when being carried. In addition, the hammock center and supportive thigh straps can cooperate to create an adjustable thigh support bucket seat. Multiple position attachments located on the upper torso support, allow for the supportive thigh straps to move and mold to the child's thighs when carried in the ergonomic spread-squat position. The thigh straps can attach via buttons or other attachment mechanism to the upper torso panel. The adjustable bucket seat can support the child's hips, pelvis, bottom and both upper thighs when the child is being carried in various orientations. This can allow for a wider range of movement for the child in the inward, forward facing and hip position. The adjustable bucket seat can be attached to the waist band and, in some embodiments, the shoulder straps.

The carrier can be ergonomic for the wearer as well. A padded waist belt and shoulder straps can form a configurable harness that can position the carrier in a front, side or back carry position while distributing the weight evenly to the wearer. The harness may be adjusted such that the upper torso panel and supportive and adjustable bucket seat position the child close to the wearer's center of gravity which distributes the child's weight evenly.

FIG. **1**A is a diagrammatic representation of one embodiment of a child carried in an inward facing orientation in a child carrier **100** worn by an adult wearer. FIG. **1**B is a diagrammatic representation of another view of one embodiment of the child carried in child carrier **100** in the inward facing orientation. FIG. **1**C is a diagrammatic representation of one embodiment of a child carried in an outward facing orientation in child carrier **100**.

Carrier **100** comprises a waist belt **110**, a main body **112** having an upper torso support portion **130** and a hammock portion **120**, thigh support straps **140** and shoulder straps **150**. A child can be supported in a child carrying area created by the main body **112** in cooperation with the wearer's torso. Upper torso support portion **130** ergonomically supports the child's back or front torso while hammock portion **120** cooperates with thigh support straps **140** to form a supportive and adjustable bucket seat **160**. Waist belt **110** and shoulder straps **150** provide a harness that distributes the child's weight to the wearer.

Hammock portion **120** and thigh support straps **140** can pass from the inward side of the child carrying area (the side closer to the wearer's torso) to an outward side to form the seat **160**. The supportive and adjustable seat **160** can be a bucket seat with a generally concave inner profile from the inward side to the outward side and from left to right. Seat side edges **162**, **164** can be higher than the center of the seat and can be spaced such that the side edges pass under and around the child's thighs at a distance from the child's hips such that the child's legs do not dangle down. In some embodiments, padding on thigh support straps **140** may provide additional support.

The adjustable bucket seat **160** can be continuous from the seat first side edge **162** to the seat second side edge **164**. To this end, the inner side edges **148** of the thigh support straps **140** may overlap hammock portion **120** along all or a substantial portion of lengths of straps **140**. However, in some cases, the weight of a child may cause some spread between the thigh support straps **140** and hammock portion **120**. To minimize gaps, elastic material or other biasing mechanism may be provided to draw thigh support straps **140** together or to cover gaps.

The seat side edges **162**, **164** may be formed by the outer edges of the thigh support straps **140** (e.g., such that the leftmost edge of the seat is formed by an edge of a thigh support strap **140** and the rightmost edge of the seat is formed by an edge of another thigh support strap **140**). The angle or separation of side edges **162** and **164** may be adjusted to adjust the shape of seat **160**. The outward end portions of each thigh support strap **140** may couple to upper torso support portion **130** at multiple locations, allowing the shape of seat **160** to be adjusted. For example, a first seat shape may be more comfortable for a child in an inward facing position while a second seat shape may be more comfortable for the child in an outward facing position.

The adjustable bucket seat is constructed to support the child in an ergonomic spread squat position with the child's pelvis, bottom and thighs all being supported. The child's weight can be supported so that the child is squatting in the seat rather than sitting rather than sitting with the child's weight primarily on the sacrum. The child can be supported with the knees higher than the bottom, in some cases higher than 90 degrees. The bucket seat can form a sling or pouch that is wider than the child's hips in which the child's bottom

is supported. The side edges pass under and around the child's thighs at a distance from the child's hips where the portion of the side edges that pass under and around the child's thighs is higher than the child's bottom to lift the child's knees. The thigh support straps **140** can have sufficient stiffness such that in an outward facing orientation (see e.g., FIG. **1**C), a portion of the side edges that wraps to the inside of the child's thighs can encourage the child's legs to spread. In an inward facing orientation (see e.g., FIG. **1**B, the child's thighs may be encouraged to spread by the thigh support straps or wearer's torso).

In the ergonomic spread squat position (also known as the "frog leg", "frog" or "squat spread" position) the flexion at the hip joint is at least 90° and in some cases is 110° to 120° from the coronal plane, and the spreading angle can average at approximately 45-55° from the median plane. The angle of the hips and spread can depend on the form factor of the carrier and developmental stage of the child. In one embodiment, the carrier can be adapted to support the child in a position with the child's femur approximately 90° to 110° (or other elevated position) from the coronal plane and to position with the child's knees with an amount of spreading. The amount of spreading may depend on the developmental stage of the child and orientation with a newborn having less than 30°, then approximately 30°, then approximately 35°-40° and so on so, such that the final spread is approximately 40°-45°, though other amounts of spreading may be achieved including (e.g., for example approximately 55°). In one embodiment, the spreading may be at least 20° degrees from the median plane. The child's weight can be distributed across the child's bottom, thighs and back so that the sacrum does not bear too much weight and the child can rest with a more naturally curved "C" spine in a spread squat position that is believed to be better for pelvic development. In some cases, the knees are not spread. It can be noted, however, that the child can be positioned in any comfortable position, preferably emphasizing a supportive posture rather than a posture where the child is primarily sitting on his or her sacrum.

Carrier **100** may be shaped to provide side leg openings for seat **160** between carrier **100** and the wearer's torso. For example, if upper torso portion **130** is sufficiently wide to wrap around the sides of the child, carrier **100** may be shaped so that seat **160** is narrower than upper torso support portion **130** to provide side openings for the child's legs to pass out of the child carrying area.

Shoulder straps **150** can be configured to form a loop on either side of the lateral centerline of carrier **100**. Each shoulder strap **150** may connect to upper torso support portion **130** at multiple locations to pull upper torso support portion **130** toward the wearer. A shoulder strap may also couple to a thigh support strap or other portion of carrier **100**. Shoulder straps **150** may be adjustable and, in some cases, can be re-configured to support multiple carrier positions, such as a side carry position or back carry position.

Waist belt **110** may be padded and configured to rest on the wearer's hips. Preferably, the harness is configured so that the child's weight is evenly distributed to the wearer's hips and shoulders and even more preferably such that the child's weight is distributed evenly to the wearer's hips and shoulders and in some cases primarily to the wearer's hips rather than shoulders. In some cases, 70 percent or more of the child's weight can be distributed to the wearer's hips through waist belt **110**, thereby promoting wearer comfort and diminishing wearer fatigue.

A child may be positioned in carrier **100** by positioning the child's bottom in hammock portion **120** and wrapping thigh support straps **140** under and around the child's legs, and coupling thigh support straps **140** upper torso support portion **130**. Positioning a child in carrier **100** may include securing the child in carrier **100**, for example coupling upper torso support portion **130** to shoulder straps **150**.

Carrier **100** can include an adjustable collar **170** that can extend upper torso support portion **130**. When extended, adjustable collar **170** can provide additional support for taller children seated in an inward facing orientation, but can fold back so that a child's face is not obstructed when the child is seated in the outward facing orientation. In the non-extended position, adjustable collar **170** can provide additional neck support for smaller children.

Complementary extended position securing mechanisms and complementary non-extended position securing mechanisms such as, but not limited to, but not limited to, buttons, snaps, d-rings and clips or hooks, patches of hook and loop material or other securing mechanism, can be provided so that adjustable collar **170** can be secured in an extended position or folded back and secured in a non-extended position. In the embodiment illustrated, for example, adjustable collar **170** can include button holes to receive buttons **174** of shoulder straps **150** to secure in an extended position and receive buttons **172** on the outer side of upper torso support portion **130** to secure in a folded back position.

FIG. **2**A is a diagrammatic representation of the inner side of one embodiment of carrier **100** with thigh support straps uncoupled from upper torso support portion **130**. In FIG. **2**A, waist band **110** folded back to show additional features of one embodiment of carrier **100**. FIG. **2**B is a diagrammatic representation of an outer side one embodiment of carrier **100** with waist belt **110** in its down (ready to wear) position and with thigh support straps **140** coupled to the upper torso support portion **130**.

Upper torso support portion **130** may include one or more panels formed from a single piece of material or multiple pieces of material, multiple layers of materials, or multiple materials. For example, in some embodiments, upper torso support may be formed with an inner layer selected for comfort against a child's skin and an outer layer selected for breathability, fashion, stain resistance, etc. Upper torso support may have straight edges, tapered edges for an area of increased width or decreased width, or otherwise configured for comfort or security of a child or a user.

Hammock portion **120** may be formed between waist belt **110** or other structure and upper torso support portion **130**. Hammock portion **120** may comprise lateral edges **202**, **204**, a first end portion **206** coupled to waist belt **110** or other portion of carrier **100**, a second end portion **208** coupled to upper torso support portion **130** and a center hammock portion that extends between the lateral edges **202**, **204**, first end portion **206** and second end portion **208**. Lateral edges **202** and **204** of hammock portion **120** may be straight, curved or laterally tapered.

Hammock portion **120** may be formed from a single piece of material, or may be formed from multiple pieces of material, multiple layers of materials, or multiple materials. The junction between upper torso support portion **130** and hammock portion **120** may be a substantially seamless transition. For example, in one embodiment, hammock portion **120** and an upper torso support panel **200** may comprise a unitary construction of one or more layers of material. In other embodiments, the junction may include seams, edges or other features delineating between upper torso support portion **130** and hammock portion **120**.

Thigh support straps **140** can be provided that extend to either side of the hammock center portion. Each thigh support strap can include a first end portion **212** and a second end

portion **214**. Each thigh support strap can include a seat outer edge **162**, **164** and a second thigh support strap inner edge **148** that can extend from the first end portion **212** to the second end **214**. A first end portion **212** of each thigh support strap **140** can be coupled to waist belt **110** or other structure and a second end portion **214** can be coupled to the upper torso support portion **130** or other structure such that the first end portion **212** is more inward (closer to the wearer) than the second end portion **214** when the carrier is worn. Thigh support straps **140** may be configured to pass under and around thighs of a child when in use.

At least one of the end portions of each thigh support strap **140** may be selectively coupled. Accordingly, carrier **100** can include a securing mechanism to secure first end portions **212** or second end portions **214**. The securing mechanism can include any suitable mechanism such as, but not limited to, buttons, snaps, d-rings and clips or hooks, patches of hook and loop material or other securing mechanism. In some cases, an end portion can be secured in multiple locations.

In the embodiment of FIG. **2**A, the first end portions **212** of thigh support straps **140** are stitched, glued, formed as a unitary piece with or otherwise fixedly joined to hammock portion **120**, waist belt **110** or other portion of carrier **100** that is to the inward side of the child carrying area when carrier **100** is worn. The first end portion **212** may be coupled in a manner that forms a flexible hinge **230** that allows thigh support strap **140**, to swing outward (away from the wearer).

Hinge **230** may be formed by any suitable mechanism including, but not limited to, stitching or otherwise joining a first end edge of a thigh support strap **140** to a lateral edge **202** or **204** of hammock portion **120** or other structure. The axis of rotation of each hinge **230** can be selected to be parallel to the lateral centerline (indicated at **234**) of carrier **100** or at another angle when carrier **100** is in a flat configuration. According to one embodiment, hinge **230** is oriented so that the axis of rotation slopes out laterally from a first end of the hinge **230** to a second end of the hinge **230** where the first end is an end more proximate to upper torso support portion **130**. The hinge axis may slope out at a desired angle relative to the lateral centerline, but preferably slopes outward less than 45 degrees and even more preferably less than 25 degrees. In some embodiments, the hinge axis slopes outward relative to the lateral centerline at an angle from 10 degrees to 25 degrees when the carrier is in a flat configuration.

Second end portions **214** can be selectively coupled to carrier **100**. For example, upper torso portion **130** may include multiple buttons or other securing mechanisms on each side of the lateral centerline **234** so that each thigh support strap **140** can be selectively secured at multiple locations (e.g., using button holes **203** or other securing mechanism). The second end portions **144** may couple to upper torso portion **130** such that the portions edges **162** and **164** that pass under the child's thighs is higher than the child's bottom and pelvis to lift the child's knees. In some embodiments, the second end **144** (the end further from the wearer) of each thigh support strap **140** is higher than the first end when carrier **100** is worn. Second end portions **214** may also secure to carrier **100** at other locations.

Thigh support straps **140** may be configured to pass under and around thighs of a child when in use. When second ends **214** of thigh support straps **140** are coupled to upper torso support portion **130**, thigh support straps **140** and hammock portion **120** form a supportive bucket seat extending from a set first side edge **162** to a seat second side edge **164**. The seat first side edge **162** is formed by a laterally outer side edge of a first thigh support strap **140** and the seat second side edge **164** is formed by the laterally outer side edge of a second thigh support strap **140**. In some embodiments, padding on thigh support straps **140** may provide additional support to lift a child's thighs.

A fabric bridge **240** can provide a biasing mechanism to help pull inner edges **148** of thigh support straps **140** toward each other to prevent gaps. Fabric bridge **240** may also help cover gaps between hammock portion **120** and thigh support straps **140**. In one embodiment, fabric bridge **240** may be coupled to hammock portion **120**.

In some cases, the width of the seat may be less than the width of upper torso support portion **130**. In one embodiment, the width of the seat may be narrower than the width of upper torso support portion **130** where the bottom ends of shoulder straps **150** couple to upper torso support portion **130** (e.g., indicated at area **260** of FIG. **2**B for one embodiment). To this end, the lateral edges of upper torso support portion **130** may taper inward to transition to lateral edges **202** and **204** of hammock portion **120** (FIG. **2**A) forming a horizontal, sloped or curved transition edge portion **250** that can act as the top edge of a side leg opening. When carrier **100** is worn, upper torso support portion **130** may wrap around to the sides of the child (e.g., as Illustrated in FIG. **1**A and **1**C), while leaving an opening formed by transition edges **250** and seat edges **162** and **164**. The child's legs and arms may pass out of the child carrying area under the transition edge **250**.

With reference to FIG. **2**C, in some embodiments, adjustable collar **170** may support a child's head and/or neck. Adjustable collar **170** may be positioned according to the direction the child is facing (i.e., inward or outward), the size of the child, or other criteria. Adjustable collar **170** may be formed from a separate piece of material or a separate material and joined to upper torso support portion **130**, or adjustable collar **170** and upper torso support portion **130** may be formed from the same material or piece of material such adjustable collar **170** is rotatable relative to upper torso support portion **130** such that adjustable collar **170** may be extended or folded back.

FIG. **3** is a diagrammatic representation of another embodiment of a child carrier **300**, similar to child carrier **100**, comprising a waist belt **310**, a main body **312** having a hammock portion **320** and an upper torso support portion **330**, thigh support straps **340** and shoulder straps **350**. A child can be supported in a child carrying area created by the main body **312** in cooperation with the wearer's torso. Upper torso support portion **330** ergonomically supports the child's back or front torso when being carried while hammock portion **320** cooperates with thigh support straps **340** to form a supportive bucket seat.

Waist belt **310** and shoulder straps **350** provide a harness that distributes the child's weight to the wearer. Shoulder straps **350** and waist belt **310** can be adjustable so that the harness evenly distributes the child's weight to the wearer. In some cases, the harness can be adjustable to distribute a majority of the child's weight to the wearer through waist belt **310** as discussed above.

A first end of a shoulder strap **350** and a second end of a shoulder strap **350** may couple to upper torso support portion **330** to form a loop that pulls the upper torso support portion **330** toward the wearer thereby supporting the child's torso. Shoulder straps **350** may be reconfigurable so that the carrier can be worn in a front carry position, back carry position or side carry position.

According to one embodiment, waist belt **310** comprises an adjustable waistband. A first end portion **314** of the waist belt may be sufficiently long to wrap substantially around the wearer and may include areas of hook and loop material on an outer side. In some cases, the areas of hook and loop material

may be sufficiently long to substantially wrap around the wearer. A second end portion **316** may include areas of hook and loop material on an inner side. The hook and loop material on first portion **314** and second portion **316** can be used adjust waist belt **310** to a broad range of sizes, (e.g., 26-55 in/66-140 cm or other range of sizes) and be worn high or low to maximize comfort, especially in the event of a C-section, and provide low back support. Other securing mechanisms may also be used. Furthermore, any suitable waist belt may be used.

Upper torso support portion **330** may include a main upper torso support panel **332**. Upper torso support panel **332** may be formed from a single piece of material, or may be formed from multiple pieces of material, multiple layers of materials, or multiple materials. For example, in some embodiments, upper torso support panel **332** may be formed with an inner layer selected for comfort against a child's skin and an outer layer selected for breathability, fashion, stain resistance, etc. In some embodiments, upper torso support panel **332** may be formed with a central portion selected for comfort and lateral portions selected for breathability, security, etc. Upper torso support panel **332** may have straight edges, tapered edges for an area of increased width or decreased width, or otherwise be configured for comfort or security of a child or a user. Upper torso support portion **330** may also include harness panels **333**. A first end of a shoulder strap **350** may join to a top portion of a harness panel and a second end of a shoulder strap may join to a lower portion of a harness panel **333**.

Hammock portion **320** may be formed between waist belt **310** or other structure and upper torso support portion **330**. Hammock portion **320** may comprise lateral edges **322**, **324**, a first end portion **326** coupled to waist belt **310** or other portion of carrier **300**, a second end portion **328** coupled to upper torso support portion **330** and a center hammock portion **325** that extends between the lateral edges **322**, **324**, first end portion **326** and second end portion **328**. Lateral edges **322** and **324** of hammock portion **320** may be straight, curved or laterally tapered.

Hammock portion **320** may be formed from a single piece of material, or may be formed from multiple pieces of material, multiple layers of materials, or multiple materials. The junction between upper torso support portion **330** and hammock portion **320** may be a substantially seamless transition. For example, in one embodiment, hammock portion **320** and an upper support panel **332** may comprise a unitary construction of one or more layers of material. In other embodiments, the junction may include seams, edges or other features delineating between upper torso support portion **330** and hammock portion **320**.

The lateral edges of upper torso support portion **330** may taper inward to transition to lateral edges **322** and **324** of hammock portion **120** (FIG. **2**A) forming a horizontal, sloped or curved transition edge portion that can act as the top edge of a side leg opening. When carrier **300** is worn, upper torso support portion **330** may wrap around to the sides of the child (e.g., as Illustrated in FIG. **1**A and **1**C), while leaving an opening formed by the transition edges and seat edges. The child's legs and arms may pass out of the child carrying area under the transition edges.

Thigh support straps **340** can be provided that extend to either side of hammock center portion **325**. Each thigh support strap can include a first end portion **342** and a second end portion **344**. A first thigh strap side edge and a second thigh strap side edge can extend from the first end portion to the second end. A first end portion **342** of each thigh support strap **340** can be coupled to waist belt **310**, hammock portion **320** or other structure and a second end portion **344** can be coupled to the upper torso support portion **330** or other structure such that the first end portion is more inward (closer to the wearer) than the second end portion when the carrier is worn. Thigh support straps **340** may be configured to pass under and around thighs of a child when in use.

At least one of the end portions of each thigh support strap **340** may be selectively coupled. Accordingly, carrier **300** can include a securing mechanism to secure first end portions **342** or second end portions **344**. The securing mechanism can include any suitable mechanism such as, but not limited to, buttons, snaps, d-rings and clips or hooks, patches of hook and loop material or other securing mechanism. In some cases, an end portion can be secured in multiple locations.

In the embodiment of FIG. **3**, the first end portions **342** of thigh support straps **340** are stitched, glued, formed as a unitary piece with or otherwise fixedly joined to hammock portion **320**, waist belt **310** or other portion of carrier **300** that is to the outward side of the child carrying area when carrier **300** is worn. The first end portion **342** may be coupled to another portion of carrier **300** in a manner that forms a flexible hinge that allows thigh support strap **340**, to swing outward (away from the wearer). The hinge **360** may be formed by any suitable mechanism including, but not limited to, stitching or otherwise joining the first end edge of a thigh support strap **340** to a lateral edge **322** or **324** of hammock portion **320** or other structure. The axis of rotation of each hinge can be selected to be parallel to the lateral centerline of carrier **300** or at another angle when carrier **300** is in a flat configuration. According to one embodiment, each hinge is oriented so that the axis of rotation slopes out laterally from a first end of the hinge to a second end of the hinge, where the first end is an end more proximate to upper torso support portion **330**. The hinge axis may slope out at a desired angle relative to the lateral centerline, but preferably slopes outward less than 45 degrees and even more preferably less than 25 degrees. In some embodiments, the hinge axis slopes outward relative to the lateral centerline at an angle from 10 degrees to 25 degrees when the carrier is in a flat configuration.

Second end portions **344** can be selectively coupled to carrier **300**. Upper torso portion **330** may include multiple buttons or other securing mechanisms on each side of the lateral centerline so that each thigh support strap **340** can be selectively secured at multiple locations. The second end portions **344** may couple to upper torso portion **330** such that the portions of edges **334** and **336** that pass under the child's thighs is higher than the child's bottom and pelvis to lift the child's knees. Additionally, the construction of thigh support straps **340** can be selected so that the portion of the side edges **334** and **336** that wraps to the inside of the child's thighs can encourage the child's legs to spread. The second end portions **344** may couple to upper torso portion **330** such that the second end (the end further from the wearer) of each thigh support strap **340** is higher than the first end when carrier **300** is worn. Second end portions **344** may also secure to carrier **300** at other locations.

Thigh support straps **340** may be configured to pass under and around thighs of a child when in use. When second ends **344** of thigh support straps **340** are coupled to upper torso support portion **330**, thigh support straps **340** and hammock center portion **325** and upper torso support portion **330** form a supportive bucket seat extending from a first side edge to a seat second side edge. The seat first side edge is formed by a laterally outer side edge of a first thigh support strap **340** (e.g., side edge **334** of a first thigh support strap **340**) and the seat second side edge is formed by the laterally outer side edge of a second thigh support strap **340** (e.g., side edge **336** of a second thigh support strap **340**).

The embodiment of FIG. **3** can support a child in a similar manner as discussed above. In the embodiment of FIG. **3**, however, the biasing mechanism can comprise gussets **390** that extend between the edges of thigh support straps **340** and edges of hammock portion **320**.

Carrier **300** can include an adjustable collar **370** to support a child's head and/or neck. Adjustable collar **370** may be positioned according to the direction the child is facing (i.e., inward or outward), the size of the child, or other criteria. Adjustable collar **370** may be formed from a separate piece of material or a separate material and joined to upper torso support portion **330**, or adjustable collar **370** and upper torso support portion **330** may be formed from the same material or piece of material such adjustable collar **370** is foldable (e.g., rotated about flexible hinge **375**) to upper torso support portion **330** such that adjustable collar **370** may be extended. As discussed above, the adjustable collar **370** may secure in multiple positions using securing mechanism.

Child carrier **300** can carry a child in an inward facing orientation or an outward facing orientation and in front carry, back carry, side carry positions. The child may be seated in an inward facing orientation or an outward facing orientation. The child may be carried with the child's weight near the wearer's center of gravity with the child's thighs and knees ergonomically angled such that the child is supported in a spread squat position.

FIG. **4**A and FIG. **4**B are diagrammatic representations of one embodiment of securing a thigh support strap **402** (e.g., such as a thigh support strap **140** of FIGS. **2**A-**2**C, or a thigh support strap **340** of FIG. **3**). According to one embodiment, thigh support strap **402** and an upper torso support portion **406** (e.g., such as an upper torso support portion **130** of FIGS. **2**A-**2**C, or upper torso support portion **330** of FIG. **3**) can include corresponding securing mechanisms. The securing mechanisms can include any suitable mechanism such as, but not limited to, buttons, snaps, d-rings and clips or hooks, patches of hook and loop material or other securing mechanism. Upper torso support portion **406** may include multiple attachment points. By way of example, but not limitation, the outward end portion of each thigh support strap **402** can include a button hole **408** and upper torso support portion **406** can include multiple buttons **410** so that each thigh support strap **402** can be secured in multiple locations, allowing the shape of a seat to be adjusted. Buttons **410** (or other securing mechanism) may be concealed under a panel or exposed. Thigh support straps **402** may be secured and unsecured as needed when the carrier is worn.

A carrier can also include a biasing mechanism **412** coupled to each thigh support strap **402**. The biasing mechanism(s) can be formed of an elastic material or other material and can act to pull thigh support straps **402** laterally toward the lateral centerline of carrier **100** to prevent gaps in the seat as needed. Additionally, biasing mechanism **412** can act to cover gaps between hammock portion **420** and thigh support straps **402**. According to some embodiments, fabric bridge **240** (FIGS. **2**A, **2**B) or gussets **390** (FIG. **3**) can act as biasing mechanism **412**.

FIG. **5**A and FIG. **5**B are diagrammatic representations of one embodiment of a child carrier **100** carrying a child. FIG. **5**A and FIG. **5**B illustrate that the shoulder straps and waist belt can form a harness to evenly distribute weight evenly to the wearer. The child can be carried proximate to the wearer's center of gravity **502**. Furthermore, in both the outward facing position (FIG. **5**A) and inward facing position (FIG. **5**B), the child's lower torso, pelvis and bottom area are ergonomically supported by the hammock and thigh support straps so that the child's thighs and knees are ergonomically angled higher than the child's hips (as indicated by line **504**) to support the child in an ergonomic spread-squat position. FIG. **5**C is a diagrammatic representation of one embodiment of child carrier **100** worn by a wearer showing an example position of a center of gravity **502**.

FIG. **6** is a diagrammatic representation illustrating that a child may be carried in carrier, such as carrier **100**, in a side carry position. In some cases, a child in the side carry position may be supported by the wearer's hip. The shoulder straps can be reconfigured to accommodate a side carry position by connecting each upper shoulder strap portion to the lower shoulder strap portion on the other side of the lateral centerline of the carrier with one strap forming a generally horizontal loop around the wearer's torso and the other strap looping over the wearers shoulder opposite the carrier. FIG. **7** is a diagrammatic representation illustrating that a child may be carried in a child carrier, such as carrier **100**, in a back carry position. Thus, embodiments of child carriers described herein can be positioned in front, back and side positions while supporting the child in an ergonomic spread squat position. In addition, a child can be oriented in an inward facing orientation or an outward facing orientation while supported in an ergonomic spread squat position.

According to some embodiments a carrier can be a soft carrier having a main body, thigh support wraps and waist belt primarily formed of one or more pieces of natural or synthetic fiber without a rigid frame. In other embodiments, a carrier can incorporate frame elements. For example, a supportive carrier seat as discussed above can be utilized with an upper torso support that incorporates a frame.

As used herein, the terms "comprises," "comprising," "includes," "including," "has," "having" or any other variation thereof, are intended to cover a non-exclusive inclusion. For example, a process, article, or apparatus that comprises a list of elements is not necessarily limited to only those elements but may include other elements not expressly listed or inherent to such process, article, or apparatus. Further, unless expressly stated to the contrary, "or" refers to an inclusive or and not to an exclusive or. For example, a condition A or B is satisfied by any one of the following: A is true (or present) and B is false (or not present), A is false (or not present) and B is true (or present), and both A and B are true (or present). As used herein, including the claims that follow, a term preceded by "a" or "an" (and "the" when antecedent basis is "a" or "an") includes both singular and plural of such term, unless clearly indicated within the claim otherwise (i.e., that the reference "a" or "an" clearly indicates only the singular or only the plural). Also, as used in the description herein and throughout the claims that follow, the meaning of "in" includes "in" and "on" unless the context clearly dictates otherwise.

Additionally, any examples or illustrations given herein are not to be regarded in any way as restrictions on, limits to, or express definitions of, any term or terms with which they are utilized. Instead, these examples or illustrations are to be regarded as being described with respect to one particular embodiment and as illustrative only. Those of ordinary skill in the art will appreciate that any term or terms with which these examples or illustrations are utilized will encompass other embodiments which may or may not be given therewith or elsewhere in the specification and all such embodiments are intended to be included within the scope of that term or terms. Language designating such nonlimiting examples and illustrations include, but is not limited to: "for example," "for instance," "e.g.," "in one embodiment."

Reference throughout this specification to "one embodiment", "an embodiment", or "a specific embodiment" or

similar terminology means that a particular feature, structure, or characteristic described in connection with the embodiment is included in at least one embodiment and may not necessarily be present in all embodiments. Thus, respective appearances of the phrases "in one embodiment", "in an embodiment", or "in a specific embodiment" or similar terminology in various places throughout this specification are not necessarily referring to the same embodiment. Furthermore, the particular features, structures, or characteristics of any particular embodiment may be combined in any suitable manner with one or more other embodiments. It is to be understood that other variations and modifications of the embodiments described and illustrated herein are possible in light of the teachings herein and are to be considered as part of the spirit and scope of the invention.

In the description herein, numerous specific details are provided, such as examples of components and/or methods, to provide a thorough understanding of embodiments of the invention. One skilled in the relevant art will recognize, however, that an embodiment may be able to be practiced without one or more of the specific details, or with other apparatus, systems, assemblies, methods, components, materials, parts, and/or the like. In other instances, well-known structures, components, systems, materials, or operations are not specifically shown or described in detail to avoid obscuring aspects of embodiments of the invention. While the invention may be illustrated by using a particular embodiment, this is not and does not limit the invention to any particular embodiment and a person of ordinary skill in the art will recognize that additional embodiments are readily understandable and are a part of this invention.

It will also be appreciated that one or more of the elements depicted in the drawings/figures can also be implemented in a more separated or integrated manner, or even removed or rendered as inoperable in certain cases, as is useful in accordance with a particular application. Additionally, any signal arrows in the drawings/Figures should be considered only as exemplary, and not limiting, unless otherwise specifically noted.

Although the invention has been described with respect to specific embodiments thereof, these embodiments are merely illustrative, and not restrictive of the invention. The description herein of illustrated embodiments of the invention, including the description in the Abstract and Summary, is not intended to be exhaustive or to limit the invention to the precise forms disclosed herein (and in particular, the inclusion of any particular embodiment, feature or function within the Abstract or Summary is not intended to limit the scope of the invention to such embodiment, feature or function). Rather, the description is intended to describe illustrative embodiments, features and functions in order to provide a person of ordinary skill in the art context to understand the invention without limiting the invention to any particularly described embodiment, feature or function, including any such embodiment feature or function described in the Abstract or Summary. While specific embodiments of, and examples for, the invention are described herein for illustrative purposes only, various equivalent modifications are possible within the spirit and scope of the invention, as those skilled in the relevant art will recognize and appreciate. As indicated, these modifications may be made to the invention in light of the foregoing description of illustrated embodiments of the invention and are to be included within the spirit and scope of the invention. Thus, while the invention has been described herein with reference to particular embodiments thereof, a latitude of modification, various changes and substitutions are intended in the foregoing disclosures, and it will be appreciated that in some instances some features of embodiments of the invention will be employed without a corresponding use of other features without departing from the scope and spirit of the invention as set forth. Therefore, many modifications may be made to adapt a particular situation or material to the essential scope and spirit of the invention.

The invention claimed is:

1. A child carrier comprising:

a waist belt configured for circumventing the waist of a user;

one or more panels forming an upper torso support and a hammock, the hammock having a first end portion coupled to the waist belt and a second end portion coupled to the upper torso support;

a thigh support strap extending to each side of the hammock, each thigh support strap having an inward end portion proximate to the hammock and an outward end portion, the outward end portion configured for selective coupling to the upper torso support in multiple positions, the hammock and the thigh support straps adapted to form an adjustable seat to support a child in an ergonomic spread-squat position in an inward facing orientation and an outward facing orientation, wherein the shape of the seat adjusts depending on the positions in which the outward end portions of the thigh support straps are coupled to the upper torso support; and

a set of shoulder straps, each shoulder strap having a first end coupled to the upper torso support and a second end coupled to the upper torso support.

2. The child carrier of claim **1**, wherein the upper torso support comprises a plurality of attachment points for each of the thigh support straps.

3. The child carrier of claim **1**, wherein the outward end of each thigh support strap comprises an opening for receiving a mechanical fastener on the upper torso support.

4. The child carrier of claim **1**, wherein each thigh support strap is padded.

5. The child carrier of claim **4**, wherein each thigh support strap is sized to wrap around a portion of a child's pelvis, bottom and thigh when the outward end is coupled to the upper torso support.

6. The child carrier of claim **1**, wherein the carrier is adapted to be alternatively worn by a wearer in a front carry, back carry and side carry position.

7. The child carrier of claim **1**, wherein the carrier is adapted to support the child in the ergonomic spread-squat position in each of a front outward facing and front inward facing orientations.

8. The child carrier of claim **1**, wherein the child carrier is adapted to distribute the child's weight evenly to the wearer.

9. The child carrier of claim **1**, further comprising:

a first plurality of buttons to a first side of a lateral centerline of the upper torso support to which a first of the thigh support straps can selectively couple; and

a second plurality of buttons to a second side of the lateral centerline of the upper torso support to which a second of the thigh support straps can selectively couple.

10. The child carrier of claim **1**, wherein each thigh support strap angles laterally outward from the inward end portion to the outward end portion when the outward end portion is not coupled to the upper torso support.

11. The child carrier of claim **1**, further comprising an adjustable collar coupled to the upper torso portion, the adjustable collar securable in an extended position and a non-extended position.

12. The child carrier of claim **1**, wherein the waist belt comprises an adjustable waist belt.

13. A method of positioning a child in a child carrier, comprising:

fastening a waist belt around a waist of a user;

positioning a child in a hammock having an inward end portion coupled to the belt and an outward end portion coupled to an upper torso support;

wrapping a first thigh support strap under a first thigh of the child and a second thigh support strap under a second thigh of the child, each thigh support strap having a first end coupled to a side of the hammock;

fastening an outward end of the first thigh strap to the upper torso support and an outward end of the second thigh support strap to the upper torso support at selected attachment points from a plurality of attachment points to adjust the shape of a seat formed by the hammock, the first thigh support strap and the second thigh support strap, the seat adapted to support the child in an ergonomic spread-squat position in an inward facing orientation and an outward facing orientation; and

inserting at least one arm into a set of shoulder straps, each shoulder strap having a first end coupled to the upper torso support and a second end coupled to the upper torso support.

14. The method of claim **13**, further comprising orienting the child in an inward facing orientation, wherein the seat supports the child in the ergonomic spread squat position in the inward facing orientation.

15. The method of claim **14**, further comprising:

readjusting the shape of the seat using the first thigh support strap and second thigh support; and

reorienting the child in an outward facing orientation, wherein the seat supports the child in the ergonomic spread squat position in the outward facing orientation.

16. The method of claim **13**, wherein the child carrier is adapted to be worn in a front carry position, a side carry position and a back carry position.

17. The method of claim **13**, further comprising securing an adjustable collar in an extended or non-extended position.

18. The method of claim **13**, wherein fastening the waist belt further comprises securing the waist belt.

19. The method of claim **11**, further comprising securing the set of shoulder straps whereby a center of gravity of the child's weight is supported nearer to the user.

* * * * *