US009295341B2

(12) **United States Patent**
Sonnenberg

(10) **Patent No.: US 9,295,341 B2**
(45) **Date of Patent: Mar. 29, 2016**

(54) **CONVERTIBLE BAG AND CHILD CARRIER**

(76) Inventor: **Heather Sonnenberg**, Redondo Beach, CA (US)

(*) Notice: Subject to any disclaimer, the term of this patent is extended or adjusted under 35 U.S.C. 154(b) by 111 days.

(21) Appl. No.: **13/355,409**

(22) Filed: **Jan. 20, 2012**

(65) **Prior Publication Data**

US 2012/0187173 A1 Jul. 26, 2012

Related U.S. Application Data

(60) Provisional application No. 61/434,756, filed on Jan. 20, 2011.

(51) **Int. Cl.**
A45C 9/00 (2006.01)
A47D 13/02 (2006.01)

(52) **U.S. Cl.**
CPC .. ***A47D 13/02*** (2013.01); ***A45C 9/00*** (2013.01)

(58) **Field of Classification Search**
CPC A47D 13/02; A47D 13/025
USPC 224/158–160, 575–577, 581
See application file for complete search history.

(56) **References Cited**

U.S. PATENT DOCUMENTS

3,841,543	A *	10/1974	Bolton	224/158
4,483,469	A *	11/1984	Arisland	224/582
4,757,925	A *	7/1988	Knittel	224/158
7,389,897	B2 *	6/2008	Pistiolis et al.	224/158
2003/0024960	A1 *	2/2003	Greenstein et al.	224/153
2008/0134408	A1 *	6/2008	Kantor	2/102
2008/0149674	A1 *	6/2008	Hiniduma-Lokuge	224/159

* cited by examiner

Primary Examiner — Adam Waggenspack
(74) *Attorney, Agent, or Firm* — West & Associates, A PC; Stuart J. West; Shaun N. Sluman

(57) **ABSTRACT**

A convertible bag with storage compartments, pockets, and bottle compartments for carrying diapers, bottles, childcare supplies, or other general items. The bag can convert into a sling for carrying a child. The storage compartments, pockets, and bottle compartments of the convertible bag can still be accessed by a user even when a child is being carried in the converted sling configuration.

18 Claims, 9 Drawing Sheets

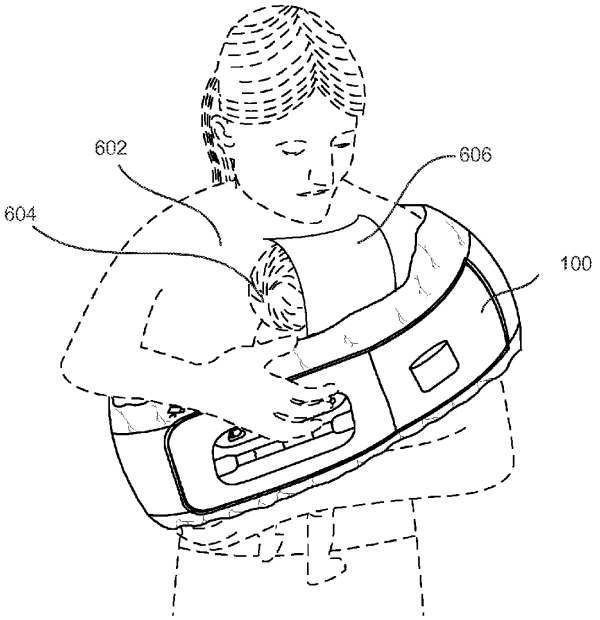

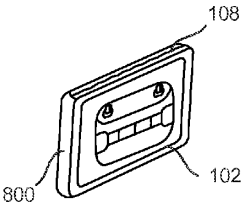

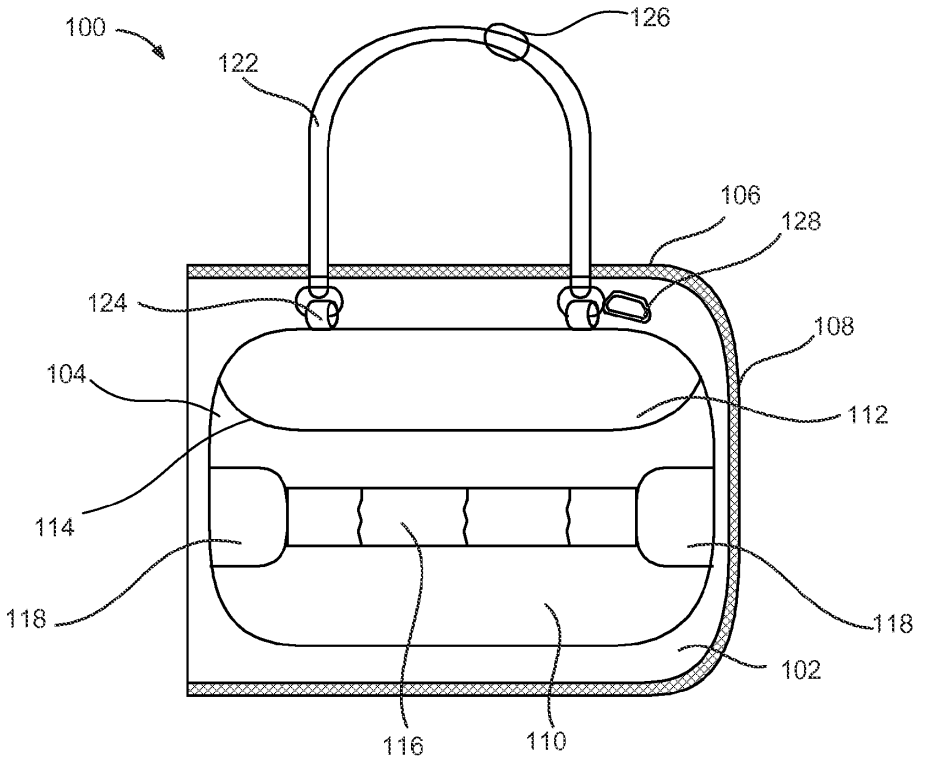
100
122
126
106
128
124
108
104
112
114
118
118
102
116
110

FIG. 1

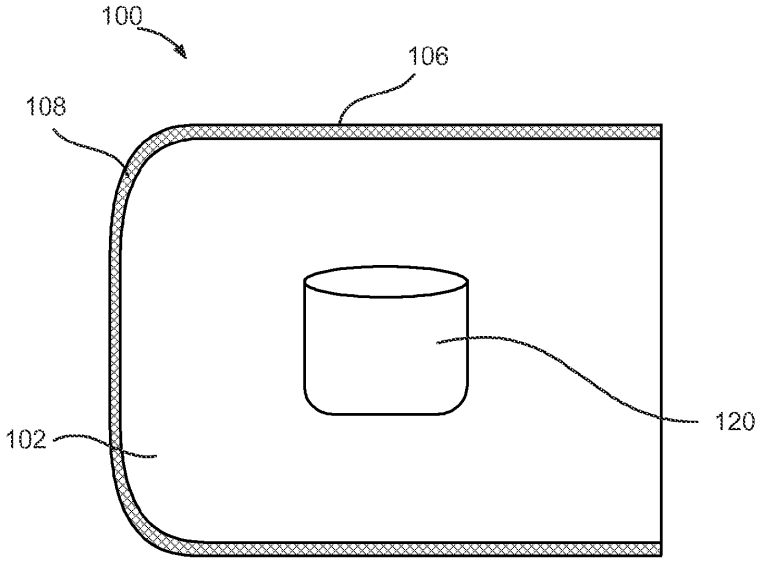
100
106
108
120
102

FIG. 2

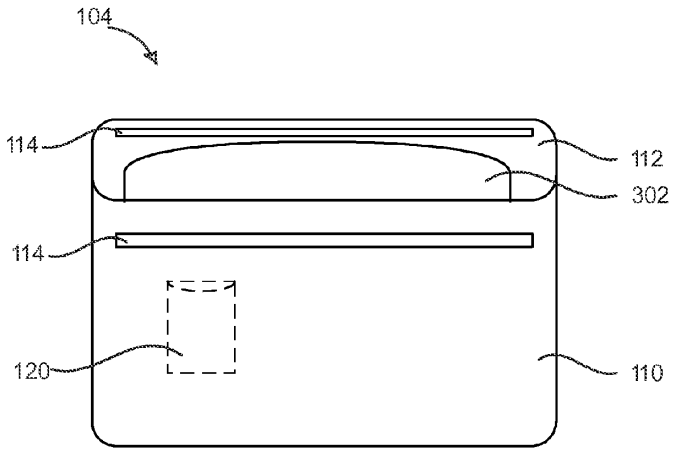
104
114
112
302
114
120
110

FIG. 3

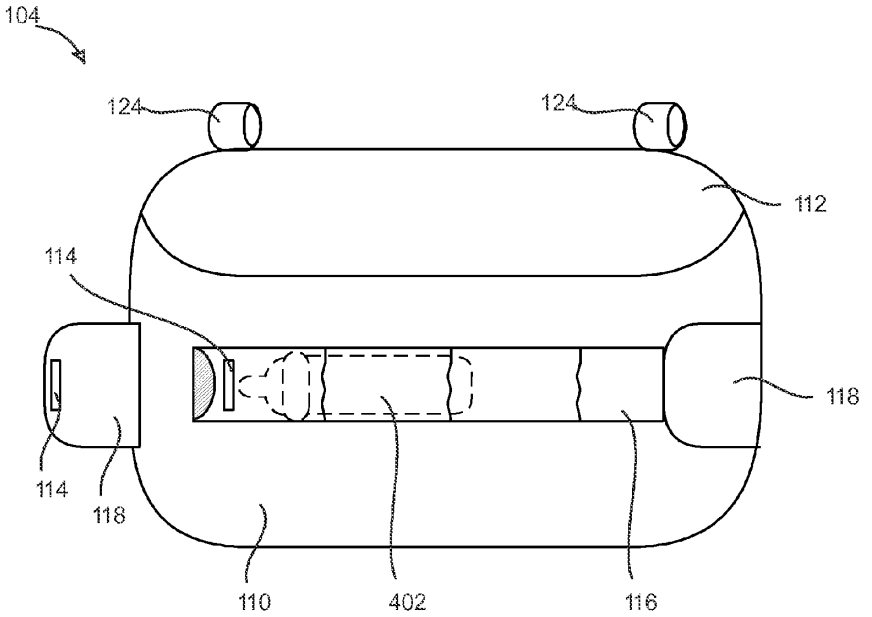
104
124
124
112
114
118
114
118
110
402
116

FIG. 4

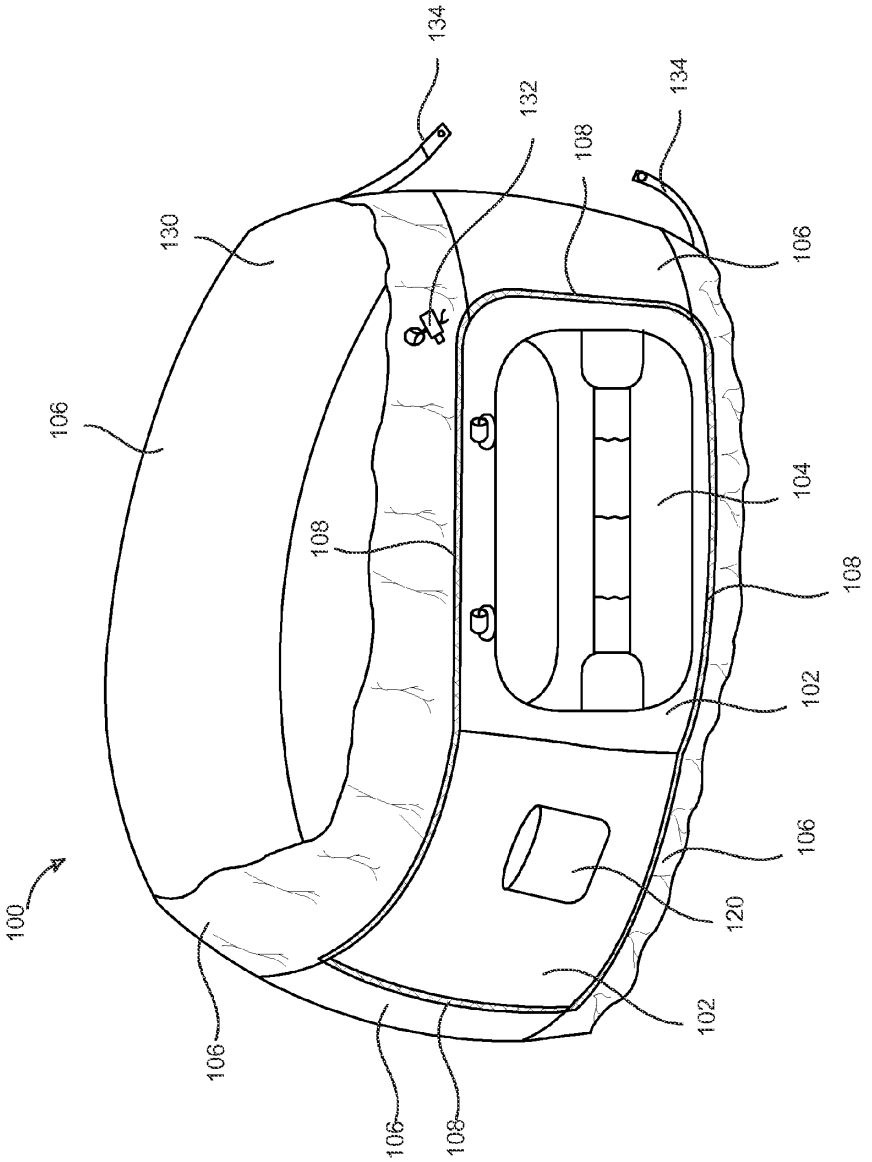
134
132
108
134
130
106
106
104
108
108
102
106
120
100
102
106
106
108

FIG. 5

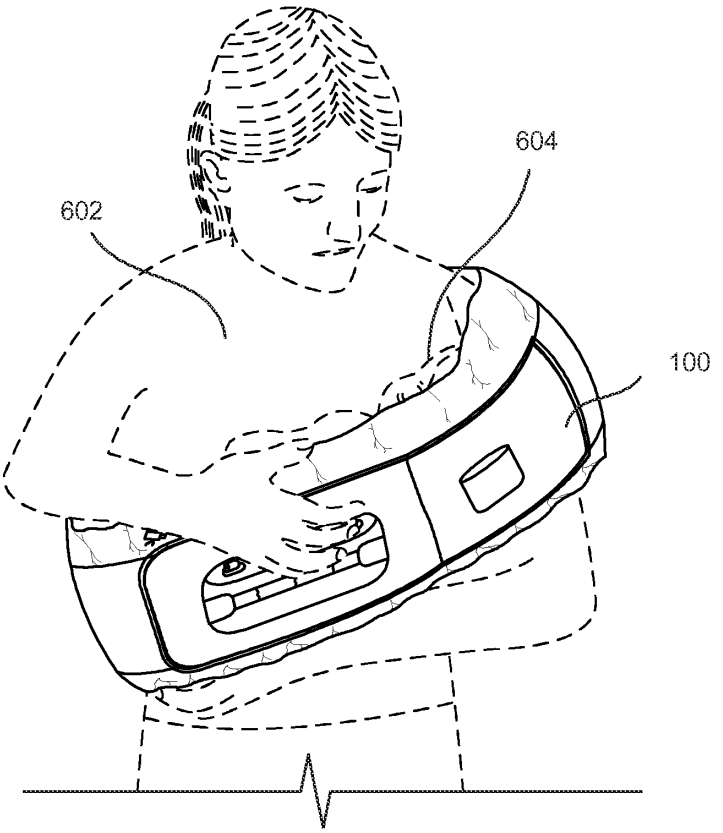

FIG. 6

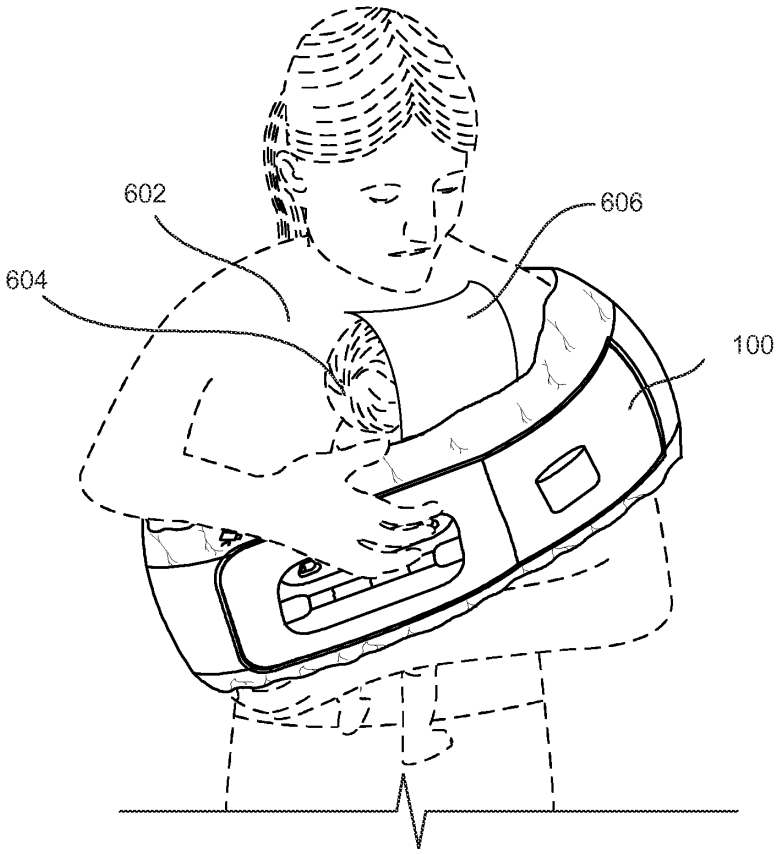

FIG. 7

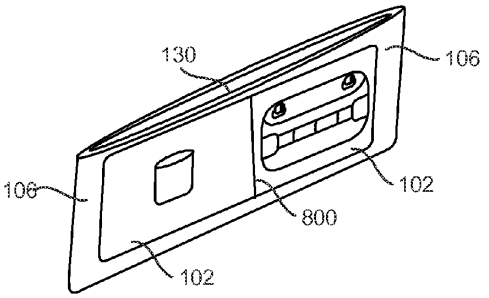

FIG. 8A

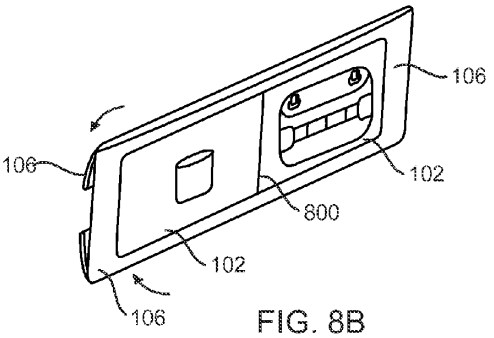

FIG. 8B

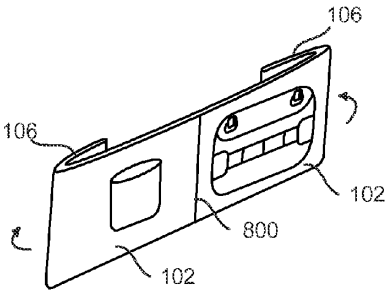

FIG. 8C

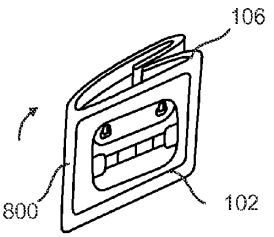

FIG. 8D

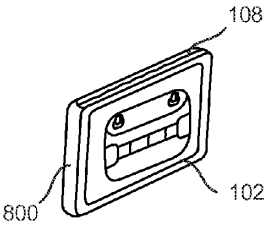

FIG. 8E

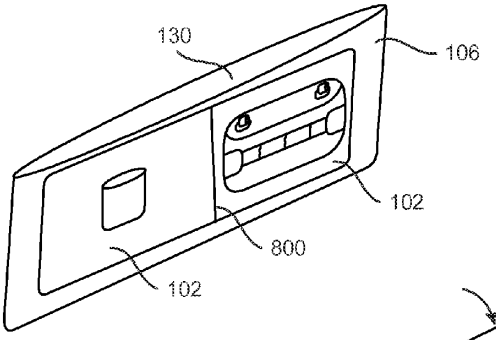

FIG. 9A

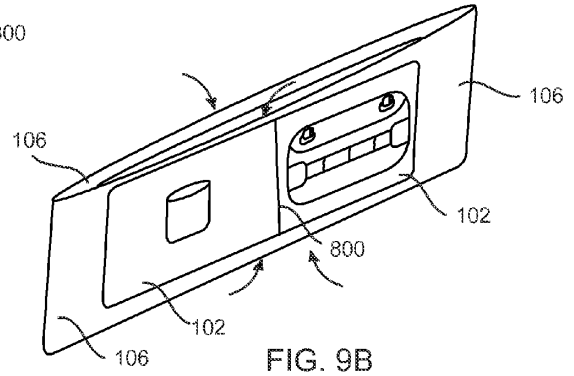

FIG. 9B

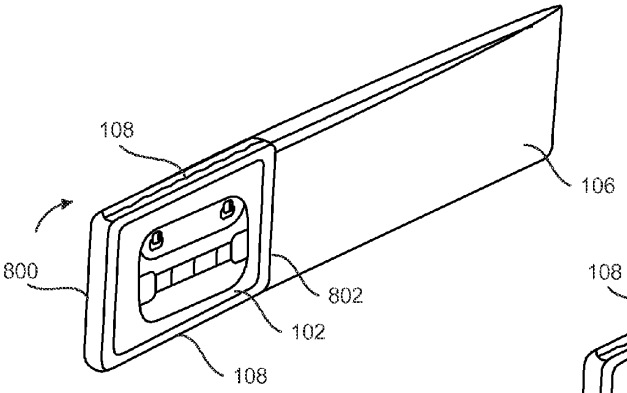

FIG. 9C

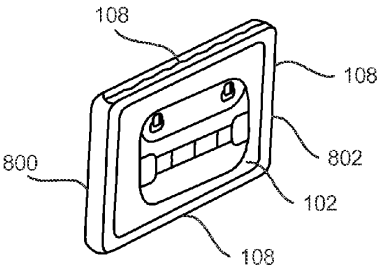

FIG. 9D

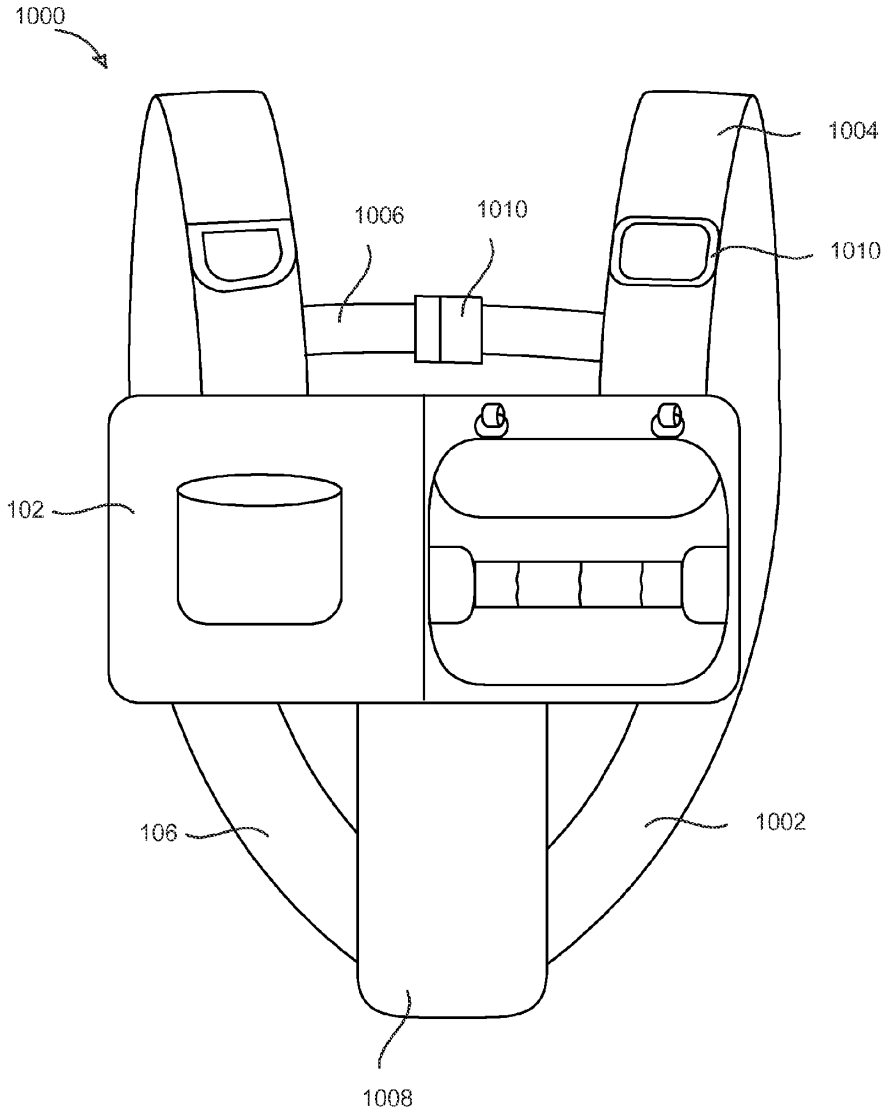

FIG. 10

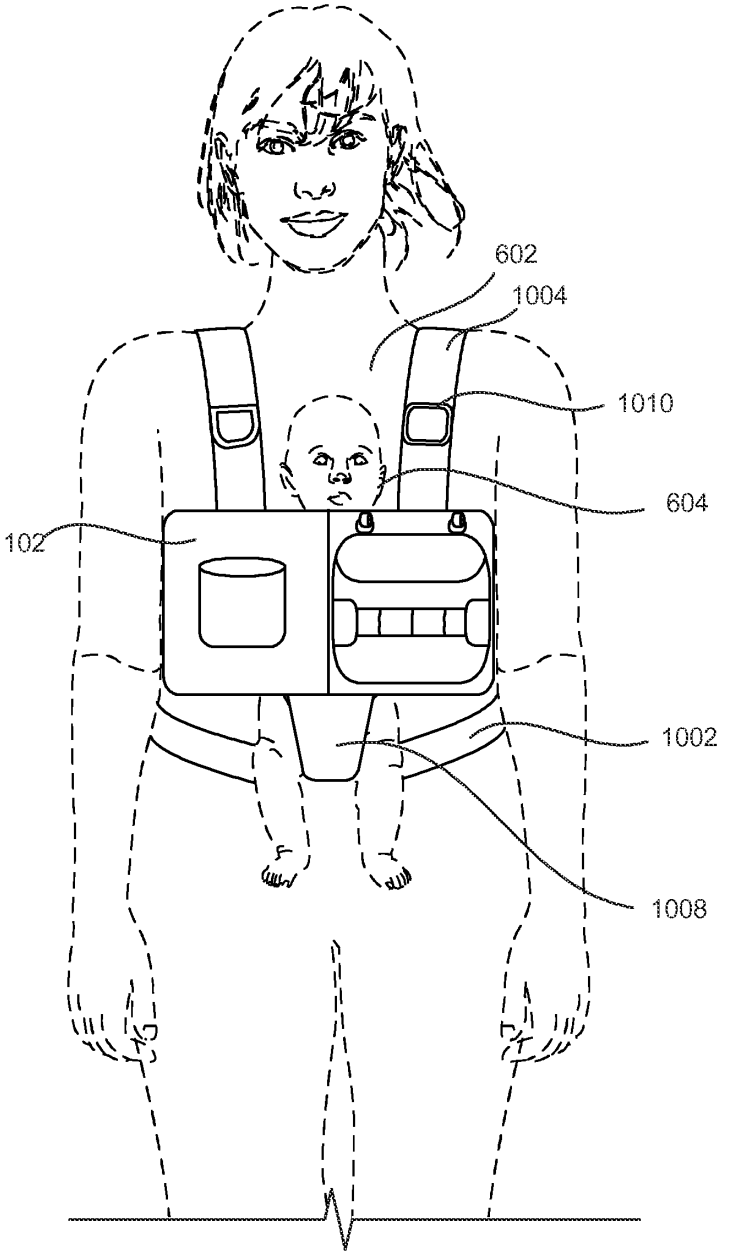

FIG. 11

CONVERTIBLE BAG AND CHILD CARRIER

CROSS-REFERENCE TO RELATED APPLICATIONS

This application claims the benefit of priority to prior filed U.S. Provisional Patent Application No. 61/434,756, filed Jan. 20, 2011, the complete contents of which are hereby incorporated by reference.

BACKGROUND

1. Field of the Invention

The present disclosure relates to the field of childcare accessories, specifically a bag that can be converted to a child carrier.

2. Background

Caring for children, including infants, toddlers, and other young children can be challenging whether a parent or guardian is at home or in a public place. However, being away from home while travelling, shopping, eating in restaurants, or being in other public venues can present a parent or guardian with the problem of having too many things to carry around in addition to needing to carry a child. Carrying around diapers, bottles, changing pads, wipes, toys, keys, wallets, cash, identification, credit cards, mobile phones, and/or other items while also holding a child can be difficult, especially when disorganization arises and it is difficult to reach needed items while caring for the child. Currently, there are both baby carriers and diaper bags on the market. However, there has not been a product that can serve both functions at a user's whim.

What is needed is a diaper bag that can hold all of one's essentials, but can also convert to a child carrier when needed. The device should allow all storage compartments and accessories of the diaper bag to remain readily accessible when the device is converted and is being used to carry a child. The device should also be able to be used as a stand-alone bag when not caring for a child or not using the bag as a diaper bag. The device should have a removable handle or strap that can be detached and stored when the device is being used to carry a child, such that there is no extra material that might get in the way between the device and the child.

BRIEF DESCRIPTION OF THE DRAWINGS

FIG. **1** depicts a front view of one embodiment of a convertible bag.

FIG. **2** depicts a back view of same embodiment of the convertible bag.

FIG. **3** depicts a front view of a storage portion without a bottle compartment in an open position.

FIG. **4** depicts a front view of a storage portion with a bottle compartment.

FIG. **5** depicts a convertible bag in an open, extended, child carrier configuration.

FIG. **6** depicts one embodiment of a convertible bag and child carrier in use with a child in a cradle position.

FIG. **7** depicts another embodiment of a convertible bag and child carrier in use with a child in a sitting position.

FIGS. **8**A-**8**E depict the steps of a method for converting the convertible bag from an open position to a closed position.

FIGS. **9**A-**9**D depict the steps of another method for converting the convertible bag from an open position to a closed position.

FIG. **10** depicts an embodiment of a convertible bag that forms a front style child carrier in an open position.

FIG. **11** depicts an embodiment of a convertible bag that forms a front style child carrier in use.

DETAILED DESCRIPTION

FIG. **1** depicts a convertible bag **100**. The convertible bag **100** can comprise one or more body portions **102**, one or more storage portions **104**, and one or more child carrier portions **106**. The convertible bag **100** can have a closed position in which the body portions **102** enclose the child carrier portions **106**, as shown in FIGS. **1** and **2**. The convertible bag **100** can also have an open position in which the child carrier portions **106** are not enclosed by the body portions **102** and the convertible bag **100** can be used as a child sling and/or carrier, as shown in FIGS. **5**-**7**.

In the closed position, the convertible bag **100** can have a front, as shown in FIG. **1**, and a back, as shown in FIG. **2**. In some embodiments, the convertible bag **100** can also have one or more sides, a top, and/or a bottom that can extend between the front and the back of the convertible bag **100**. The front, back, sides, top, and/or bottom of the convertible bag **100** can comprise one or more body portions **102**. In some embodiments, the convertible bag **100** can comprise a single body portion **102** that is large enough to extend from the front of the convertible bag **100** to the back of the convertible bag **100**. By way of a non-limiting example, a single body portion **102** can be folded, tucked, segmented, or bent into at least two sections such that one section of the body portion **102** is the front of the convertible bag and the other section of the bottom portion is the back of the convertible bag, as shown in FIGS. **1** and **2**. In alternate embodiments, the front of the convertible bag **100** can comprise one body portion **102** and the back of the convertible bag **100** can comprise a separate body portion **102**. In still other embodiments, the front, back, top, bottom and/or sides of the convertible bag **100** can each comprise any number of body portions **102** coupled with one another in any configuration. In some embodiments of the convertible bag **100** that comprise a plurality of body portions, the body portions can be coupled with one another directly through stitching, adhesives, fusing, or any other connection method. In other embodiments of the convertible bag **100** that comprise a plurality of body portions **102**, the body portions **102** can be coupled with one another via intermediate portions comprised of fabric, plastic, polymer, nylon, elastomeric material, metallic thread, or any other known and/or convenient material or combination of materials.

In some embodiments, the body portions **102** can be substantially rectangular. In alternate embodiments, the body portions **102** can be circular, square, ovoid, irregular in shape, and/or can have any other known and/or convenient geometry. In some embodiments, the body portions **102** can be at least partially comprised of fabric. In other embodiments the body portions **102** can be at least partially comprised of plastic, polymer, nylon, elastomeric material, metallic thread, and/or any other known and/or convenient material or combination of materials. In some embodiments, the body portions **102** can be comprised of hypo-allergenic, anti-bacterial, anti-fungal, waterproof, breathable, sun resistant, and/or water resistant material. In some embodiments, the body portions **102** can be at least partially comprised of impermeable material, such that liquid cannot pass through the body portions **102**. The body portions **102** can be machine washable and/or insulated. The body portions **102** can comprise one or more colors, prints, designs, and/or embellishments.

The front and back of the convertible bag **100** can be permanently coupled with one another along one side, and selectively coupled with one another on the remaining sides

via closure mechanisms **108** to form the convertible bag **100** into the closed position. In some embodiments, the closure mechanisms **108** can be one or more zippers. By way of a non-limiting example, in the embodiment shown in FIGS. **1** and **2**, the front and back of the convertible bag **100** are permanently coupled with one another along one side (the left side as seen in FIG. **1** and the right side as seen in FIG. **2**), and are selectively coupled with one another along the top, opposing side, and bottom via a zipper. In alternate embodiments, the closure mechanisms **108** can be hook and loop fasteners, snaps, buttons, magnets, and/or any other convenient and/or desired closure mechanism.

In some embodiments, one or more storage portions **104** can be coupled with the convertible bag **100**. A storage portion **104** can comprise one or more storage compartments **110** and one or more access sections **112**. A storage compartment **110** can be a pouch, box, pocket, case, or any other type of compartment. An access section **112** can be a flap, slit, or any other mode of accessing a storage compartment **110**. In some embodiments, the storage compartment **110** and/or the access section **112** can comprise one or more fastening components **114** that can be selectively engaged to close the storage portion **104**. In some embodiments, the fastening components **114** can be complementary hook and loop fasteners. In other embodiments, the fastening components **114** can be snaps, hook and eye fasteners, buttons, magnets, zippers, or any other known and/or convenient fastening mechanism. The storage portion **104** can be coupled with the convertible bag **100** at any location on the convertible bag **100**. By way of a non-limiting example, the storage portion **104** can be coupled with front of the convertible bag **100**, as shown in FIG. **1**. In some embodiments, the storage portion **104** can be coupled with the convertible bag **100** permanently via stitching, adhesives, or any other desired mechanism. In alternate embodiments, the storage portion **104** can be removable and can be selectively coupled with the convertible bag **100** temporarily via snaps, buttons, hook and loop fasteners, or any other desired selective coupling mechanism.

FIG. **3** depicts an embodiment of a storage portion **104** in a configuration with an access section **112** open such that the interior of the storage compartment **110** can be accessed. In some embodiments, a storage compartment **110** can be sized such that it can store a diaper changing pad **302**, as shown in FIG. **3**. In other embodiments, the storage compartment **110** can be sized such that it can store baby wipes, diapers, toys, clothing, medications, books, and/or any other item or group of items. The access section **112** can be secured to the storage compartment **110** with the fastening components **114**. By way of a non-limiting example, the fastening components **114** shown in FIG. **3** are corresponding strips of hook and loop fasteners coupled with the access section **112** and the storage compartment **110**.

FIG. **4** depicts an embodiment of the storage portion **104** comprising a bottle compartment **116**. In some embodiments one or more bottle compartments **116** can be coupled with the convertible bag **100**. In some embodiments, one or more bottle compartments **116** can be coupled with the storage portion **104**, as shown in FIGS. **1** and **4**. In other embodiments, one or more bottle compartments **116** can be coupled with one or more body portions **102** at any location on the convertible bag **102**. In some embodiments, a bottle compartment **116** can be a substantially horizontal tubular pathway configured to accommodate one or more baby bottles **402** and/or other desired objects, as shown in FIG. **4**. In alternate embodiments, the bottle compartment **116** can be vertical or can be oriented in any other direction. In some embodiments, a bottle compartment **116** can comprise flaps **118** at one or both ends of the tubular pathway to enclose the bottle compartment **112**. In some embodiments, the flaps **118** can be selectively coupled with the bottle compartment **116** via fastening components **114** to enclose the bottle compartment **116**. In some embodiments, the bottle compartment **116** can be coupled with the convertible bag **100** permanently via stitching, adhesives, or any other desired mechanism. In alternate embodiments, the bottle compartment **116** can be removable and can be selectively coupled with the convertible bag **100** temporarily via snaps, buttons, hook and loop fasteners, or any other desired selective coupling mechanism.

The bottle compartments **116** and the flaps **118** can be comprised of the same material as the body portions **102** and/or storage portions **104**, or can be comprised of a different material. In some embodiments, the bottle compartments **116** can be insulated via insulating layers or inherently insulating material such as foam, rubber, polystyrene, neoprene, or other insulating material to assist in keeping baby formula, breast milk, food, or other items at proper temperatures.

In some embodiments, the convertible bag **100** can comprise one or more pockets **120**. The pockets **120** can have any desired dimensions. Pockets **120** can be configured to hold a mobile phone, personal computing device, keys, wallet, credit cards, cash, toys, pacifiers, jewelry and/or any other desired items. A pocket **120** can be located at any position on the convertible bag **100**, such as on a body portion **102** or on the exterior or interior of a storage portion **104**. By way of a non-limiting example, FIG. **2** depicts a pocket **120** coupled with the body portion **102** on the back of the convertible bag **100**. By way of another non-limiting example, FIG. **3** depicts a pocket **120** coupled with the interior of the storage compartment **110** such that the pocket **120** and the contents of the pocket **120** cannot be seen from outside the convertible bag **100**. In some embodiments, the pockets **120** can be closed and/or fastened with fastening components **114** such that the contents of the pocket **120** can be secured inside the pocket **120** until the pocket **120** is opened or unfastened. In some embodiments, one or more pockets **120** can be selectively removable from the convertible bag **100**. The pockets **120** can be removably coupled with the body portions **102** via hook and loop fasteners, snaps, buttons, zippers, clips, magnets and/or any other convenient mechanism. In alternate embodiments, the pockets **120** can be permanently coupled with the body portions **102** via stitching, adhesives, or any other attachment mechanism.

One or more handles **122** can be coupled with the convertible bag **100**. In some embodiments, the convertible bag **100** can comprise rings **124** and the handles **122** can be removably coupled with the rings **124**, such that the handles **122** can be detached from the convertible bag **100** and optionally stored in a storage compartment **110**. The rings **124** can be fabric loops, metal rings, plastic rings, or any other type of ring or loop. In alternate embodiments, the handles **122** can be permanently coupled with the convertible bag **100** and/or the loops **124** via stitching, adhesives, fusing, or any other attachment mechanism. In some embodiments, the handles **122** can be coupled with a storage portion **104**. In alternate embodiments, the handles **122** can be coupled with one or more of the front, back, sides, and/or top of the convertible bag **100**. By way of a non-limiting example, the handle **122** depicted in FIG. **1** can be coupled with the storage portion **104**. In some embodiments, the handles **122** can have an adjustable length via one or more rings **126**. In some embodiments, the handles **122** can have a fixed length suitable for wearing the handles **122** over a user's shoulder. In other embodiments, the handles **122** can have a fixed length suitable for carrying the handles **122** by hand. The handles **106** can be comprised of fabric,

nylon, polymer, elastomeric material, non-slip material, breathable material, mesh material, and/or any other desired material or combination of materials.

In some embodiments, one or more carabiners **128** can be selectively coupled with the handles **122** and/or the rings **124**. In other embodiments, the carabiners **128** can be selectively coupled with any other desired portion of the convertible bag **100**. In operation, the carabiners **128** can be used to attach keys, accessories, toys, pacifiers, rattles or other items to the convertible bag **100**.

FIG. **5** depicts the convertible bag **100** in one embodiment of an open position such that the one or more child carrier portions **106** are not enclosed by the body portions **102**. In some embodiments, in the open position the body portions **102** and/or the child carrier portions **106** can form a sling type child carrier, as shown in FIGS. **5-9**. In other embodiments, in the open position the body portions and/or the child carrier portions **106** can form a front style child carrier, as shown in FIGS. **10** and **11**. In still other embodiments, in the open position the body portions **102** and/or the child carrier portions **106** can form any other style, form, or type of child carrier, such as a wrap, sling, backpack, harness, papoose, or other child carrier.

Referring back to FIG. **5**, the body portions **102** and/or the child carrier portions **106** can form a loop **130** that can be worn by a user as a sling type child carrier, as shown in FIGS. **6** and **7**. In some embodiments, some segments of the loop **130** can be wider than other segments of the loop **130**. In other embodiments, the loop **130** can have a uniform width at each segment around the circumference of the loop **130**. The loop **130** can have a circumference such that a user can surround his or her upper torso with the loop **130** so that the loop **130** is positioned diagonally across the user's chest from a shoulder to the waist. In some embodiments, the loop **130** can have a fixed circumference. In other embodiments, the loop **130** can comprise one or more adjustment mechanisms **132** that a user can operate to change the circumference of the loop **130** to fit the user's body size. In some embodiments, the adjustment mechanisms **132** can be one or more elastic cords with toggles. In alternate embodiments, the adjustment mechanisms **132** can be adjustable straps. In still other embodiments, the adjustment mechanisms **132** can be hook and loop fasteners, snaps, buttons, or any other device for changing the circumference of the loop **130**. In some embodiments the body portions **102** and/or the child carrier portions **106** can be permanently formed into the loop **130**. In other embodiments, the body portions **102** and/or the child carrier portions **106** can be selectively coupled with one another to form the loop **130**, and in some embodiments can be selectively coupled at different locations to change the circumference of the loop **130**.

In some embodiments, a child carrier portion **106** can be integral with and made from the same piece of material as a body portion **102**. In alternate embodiments, the child carrier portions **106** can be coupled with the body portions **102** via stitching, adhesives, fusing, or any other coupling mechanism. In some embodiments, the child carrier portions **106** can be comprised of elastomeric material, such that the child carrier portions **106** can conform to a child's body when the child rests on the child carrier portion **106**. In other embodiments, the child carrier portions **106** can be comprised of fabric, nylon, fleece, mesh, polymer, plastic, and/or any other desired material or combination of materials. In some embodiments, the child carrier portions **106** can be comprised of hypo-allergenic, anti-bacterial, anti-fungal, waterproof, breathable, sun resistant, and/or water resistant material. The child carrier portions **106** can be machine washable and/or insulated. In some embodiments, the edges of the loop **130** formed by the child carrier portions **106** can be elastomeric. In some embodiments, the child carrier portions **106** can comprise cushions. In some embodiments, the child carrier portions **106** can have holes for a child's legs.

In some embodiments, one or more portions of the loop **130** that can be worn at a user's shoulder can comprise one or more shoulder adjustment mechanisms **134** to change the width of the loop **130** at the user's shoulder. The shoulder adjustment mechanisms **134** can be one or more straps, hook and loop fasteners, buttons, snaps, clasps, elastic cording, or any other device that can change the width of the shoulder portion of the loop **130**. In some embodiments, a plurality of shoulder adjustment mechanisms **134** can be selectively mated with one another to decrease the width of the loop **130**. In alternate embodiments, one or more shoulder adjustment mechanisms **134** can be operated in isolation to adjust the width of the loop **130**. In some embodiments, a plurality of shoulder adjustment mechanisms **134** can be located in different positions around the loop **130**, such that the user can choose to wear the loop **130** in different configurations, for example around the user's left shoulder, right shoulder, or both shoulders, and have shoulder adjustment mechanisms **134** near the chosen shoulders regardless of the orientation of the loop **130** around the user's body.

In operation, the convertible bag **100** can be in a closed position such that the child carrier portions **106** are enclosed by the body portions **102** secured together by the closure mechanisms **108**, as shown in FIGS. **1** and **2**. In the closed position, the user can be able to reach and access items stored in the storage compartments **110**, the bottle compartments **116**, and/or the pockets **120**.

When the user wishes to carry a child, the user can convert the convertible bag **100** to a child carrier by unsecuring the closure mechanisms **108** so that the front and the back of the collapsible bag **100** can be unfolded and arranged substantially side by side such that the child carrier portions **106** are no longer enclosed by the body portions **102**. The user can then arrange the child carrier portions **106** into the loop **130** as shown in FIG. **5**, and wear the opened convertible bag **100** around the user's torso **602** as shown in FIGS. **6** and **7**. In some embodiments, the opened convertible bag **100** can be worn over a user's shoulder in a substantially diagonal fashion, as shown in FIG. **6**. In alternate embodiments, the opened convertible bag **100** can be worn on both shoulders, over a user's back, or in any other desired configuration. The user can also choose to remove the handles **122** from the convertible bag **100** and store the handles **122** in a storage compartment **110**.

After the convertible bag **100** has been opened and worn on the user's body, the user can place a child **604** on the inside of the loop **130** of the opened convertible bag **100**, such that the child's weight rests on the body portions **102** and/or the child carrier portions **106**. A user can hold the child **604** in the opened convertible bag **100** in a cradle position, as shown in FIG. **6**. In other embodiments, a child **604** may be placed upright against the user's chest, such that the child's buttocks can be supported by the child carrier portions **106** and/or the body portions **102**, with the child's feet dangling below the child carrier portions **106**, as shown in FIG. **7**. In still other embodiments, the child **604** can be placed such that the child's legs are tucked into the loop **130**, the child **604** is placed against the user's hips, the child **604** is placed facing forward, the child **604** is placed facing backward, the child **604** is placed sideways, and/or the child **604** is placed in any other configuration. After the child **604** has been placed into the opened convertible bag **100**, the user can still be able to

reach and access items stored in the storage compartments **110**, the bottle compartments **116**, and/or the pockets **120**.

In some embodiments, one or more breastfeeding covers **606** can be coupled with the loop **130** such that the breastfeeding covers **606** can be placed over the child **604** and/or the user's torso **602** during breastfeeding for the user's privacy, as shown in FIG. **7**. In some embodiments, the breastfeeding covers **606** can be integral with the loop **130**. In alternate embodiments, the breastfeeding covers **606** can be separate components that can be selectively coupled to the child carrier portions **106** and/or the body portions **102** via fastening components **114**.

FIGS. **8**A-**8**E depict one embodiment of steps a user can take to return the convertible bag **100** to the closed position. When a user no longer desires to use the convertible bag **100** as a child carrier, the user can remove the child **604** from the opened convertible bag **100**. The user can then flatten the loop **130** as shown in FIG. **8**A. The user can fold the sections of the child carrier portions **106** that extend above and below the body portions **102** into the loop **130** or behind the loop **130**, as shown in FIG. **8**B. The user can fold the sections of the child carrier portions **106** that extend to the left and right of the body portions **102**, as shown in FIG. **8**C. In some embodiments, the child carrier portions **106** and/or the body portions **102** can have corresponding fastening components **114** to secure the folded sections in place after the user folds them into position. The user can fold the body portions **102** and the child carrier portions **106** along the line **800** at which the front and the back of the convertible bag **100** are permanently coupled with one another, as shown in FIG. **8**D. The user can then engage the closure mechanisms **108** to secure the remaining sides of the front and the back of the convertible bag with one another such that the child carrier portions **106** are enclosed by the body portions **102**, as shown in FIG. **8**E. The steps can be reversed to convert the convertible bag **100** from the closed position back to the open position.

FIGS. **9**A-**9**D depict another embodiment of steps a user can take to return the convertible bag **100** to the closed position. When a user no longer desires to use the convertible bag **100** as a child carrier, the user can remove the child **604** from the opened convertible bag **100**. The user can then flatten the loop **130** as shown in FIG. **9**A. The user can fold the sections of the child carrier portions **106** that extend above and below the body portions **102** into the loop **130**, as shown in FIG. **9**B. In some embodiments, the child carrier portions **106** and/or the body portions **102** can have corresponding fastening components **114** to secure the folded sections in place after the user folds them into position. The user can fold the body portions **102** and the child carrier portions **106** along the line **800** at which the front and the back of the convertible bag **100** are permanently coupled with one another, such that the child carrier portions **106** extend outward from the end **802** opposite the line **800**, as shown in FIG. **9**C. The user can then engage the closure mechanisms **108** to secure the tops and the bottoms of the front and the back of the convertible bag with one another while leaving the side **802** of the convertible bag **100** opposite the line **800** open, as shown in FIG. **9**C. The user can then push the child carrier portions **106** through the open side **802** to a position between the body sections **102** and engage the closure mechanisms **108** along the side **802** to enclose the child carrier portions **106** inside the body portions **102**, as shown in FIG. **9**D. The steps can be reversed to convert the convertible bag **100** from the closed position back to the open position.

In other embodiments, when a user no longer desires to use the convertible bag **100** as a child carrier, the user can remove the child **604** from the opened convertible bag **100** and use any other sequence of steps including tucking, folding, rolling, bending, stuffing, or otherwise manipulating the child carrier portions **106**, the body portions **102**, and the closure mechanisms **108** to enclose the child carrier portions **106** within the body portions **102** and return the convertible bag **100** to the closed position.

FIG. **10** depicts another embodiment of the convertible bag **100** in which the body portions **102** and/or the child carrier portions **106** can form a front style baby carrier **1000** when the convertible bag **100** is in the open position. The child carrier portions **106** can be one or more support sections **1002**. Support sections **1002** can be shoulder straps **1004**, back straps **1006**, child support sections **1008**, and/or any other sections of a front style baby carrier **1000**. In some embodiments, the support sections **1002** can comprise additional hardware **1010** that can adjust and/or connect the support sections **1002** together, such as buckles, adjustment rings, clasps, straps, snaps, buttons, or any other desired hardware.

In some embodiments, a child carrier portion **106** can be integral with and made from the same piece of material as a body portion **102**. In alternate embodiments, the child carrier portions **106** can be coupled with the body portions **102** via stitching, adhesives, fusing, or any other coupling mechanism. In some embodiments, the child carrier portions **106** can be comprised of elastomeric material, such that the child carrier portions **106** can conform to a child's body when the child rests on the child carrier portion **106**. In other embodiments, the child carrier portions **106** can be comprised of fabric, nylon, fleece, mesh, polymer, plastic, and/or any other desired material or combination of materials. In some embodiments, the child carrier portions **106** can be comprised of hypo-allergenic, anti-bacterial, anti-fungal, waterproof, breathable, sun resistant, and/or water resistant material. The child carrier portions **106** can be machine washable and/or insulated. In some embodiments, the child carrier portions **106** can comprise cushions. In some embodiments, the child carrier portions **106** can have holes for a child's legs and/or arms.

FIG. **11** depicts the embodiment of the convertible bag **100** of FIG. **10** in use. When the user wishes to carry a child **604**, the user can convert the convertible bag **100** to the front style child carrier **1000** by unsecuring the closure mechanisms **108** so that the front and the back of the collapsible bag **100** can be unfolded and arranged substantially side by side such that the child carrier portions **106** are no longer enclosed by the body portions **102**. The user can then arrange the child carrier portions **106** into the support sections **1002** as shown in FIG. **10** and wear the front style child carrier **1000** around the user's torso **602** as shown in FIG. **11**. The user can also choose to remove the handles **122** from the convertible bag **100** and store the handles **122** in a storage compartment **110**.

After the convertible bag **100** has been opened and worn on the user's body, the user can place a child **604** between the user's torso **602** and the convertible bag **100**, such that the child's weight is supported by the body portions **102**, the child support section **1008**, and or any other support section **1000**. In some embodiments, the child's feet can dangle below the front style child carrier **1000**, as shown in FIG. **11**. The user can place the child **604** into the front style child carrier **1000** such that the child **604** is facing toward the user's torso **602** or facing away from the user's torso **602**. After the child **604** has been placed into the front style child carrier **1000**, the user can still be able to reach and access items stored in the storage compartments **110**, the bottle compartments **116**, and/or the pockets **120**.

Although the invention has been described in conjunction with specific embodiments thereof, it is evident that many

alternatives, modifications and variations will be apparent to those skilled in the art. Accordingly, the invention as described and hereinafter claimed is intended to embrace all such alternatives, modifications and variations that fall within the spirit and broad scope of the appended claims.

What is claimed is:

1. A convertible bag, comprising:

a body portion having a first half and a second half, said body portion being foldable such that said first half and said second half are configured to be folded together to form a pouch bounded by said first half and said second half, said body portion lacking a removable stiffening member that precludes folding said body portion to form said pouch when said removable stiffening member is coupled with said body portion;

one or more storage portions coupled with said body portion; and

a child carrier portion extending from all perimeter edges of said body portion beyond the unfolded height and width of said body portion, such that said body portion and said child carrier portion together permanently form a closed loop, said child carrier portion being collapsible such that said child carrier portion is configured to be collapsed and stored within said pouch; and

a closure mechanism coupled with said perimeter edges of said body portion, said closure mechanism being configured to seal said pouch around said child carrier portion when said child carrier portion is collapsed,

wherein said closed loop forms a child carrier when said child carrier portion is not held within said pouch and is expanded out of its collapsed position, and said first half and said second half of said body portion are not folded together.

2. The convertible bag of claim **1**, wherein said child carrier is a sling style child carrier configured to be worn by a user by wrapping said closed loop at least partially around said user's body.

3. The convertible bag of claim **1**, further comprising a handle coupled with said pouch such that said closed loop forms a diaper bag with storage inside said one or more storage portions when said child carrier portion is collapsed inside said pouch and said closure mechanism seals said pouch.

4. The convertible bag of claim **1**, wherein said one or more storage portions are accessible to a user both when said first half and said second half of said body portion are folded together to form said pouch, and when said closed loop forms said child carrier.

5. The convertible bag of claim **3**, wherein said handle is selectively removable and said body portion comprises rings for selectively attaching said handle.

6. The convertible bag of claim **3**, wherein said handle is selectively removable and said one or more storage portions comprise rings for selectively attaching said handle.

7. The convertible bag of claim **1**, wherein said closure mechanism is a zipper.

8. The convertible bag of claim **1**, further comprising one or more bottle compartments coupled with said body portion.

9. The convertible bag of claim **1**, further comprising one or more bottle compartments coupled with at least one of said one or more storage portions.

10. The convertible bag of claim **9**, wherein said one or more bottle compartments are insulated.

11. The convertible bag of claim **1**, further comprising one or more pockets coupled with said body portion.

12. The convertible bag of claim **1**, further comprising one or more pockets coupled with the exterior of at least one of said one or more storage portions.

13. The convertible bag of claim **1**, further comprising one or more pockets coupled with the interior of at least one of said one or more storage portions.

14. A child carrier, comprising:

a loop having one or more body portions and one or more child carrier portions coupled with all perimeter edges of said one or more body portions and extending beyond the height and width of said one or more body portions, said loop being permanently closed; and

a closure mechanism coupled with said perimeter edges of said one or more body portions,

wherein said one or more body portions are configured to fold together to form a pouch and said closure mechanism is configured to selectively seal said pouch,

wherein said one or more body portions lack a removable stiffening member that precludes folding said one or more body portions to form said pouch when said removable stiffening member is coupled with said one or more body portions,

wherein said one or more child carrier portions are collapsible such that they fit within said pouch when said pouch is folded and sealed by said closure mechanism, and

wherein said loop is convertible between a first configuration in which said one or more child carrier portions are collapsed and held within said pouch and said pouch is sealed by said closure mechanism, and a second configuration in which said one or more child carrier portions are expanded out of said pouch, said one or more body portions are unfolded, and said loop forms a sling-style child carrier.

15. The child carrier of claim **14**, further comprising one or more storage portions coupled with said one or more body portions, such that said loop forms a diaper bag in said first configuration.

16. The child carrier of claim **15**, further comprising a bottle compartment coupled with one of said one or more storage portions.

17. The child carrier of claim **16**, wherein said bottle compartment is insulated.

18. The child carrier of claim **14**, further comprising a removable handle configured to be selectively coupled with said loop when said loop is in said first configuration.

* * * * *