(19) Austrian Patent Office

(10) **AT 11 620 U2 2011-02-15**

(12) # Utility Model Specification

(21) Application Number: GM 466/2010
(22) Filing Date: 07/21/2010
(24) Commencement of Protection Period: 12/15/2010
(45) Publication Date: 02/15/2011

(51) Int. Cl. : ***A47D 13/02*** (2006.01)

(73) Utility Model Holder:
STOMPER-ROSAM BETTINA DR.
A-1120 VIENNA (AT)

(72) Inventor:
STOMPER-ROSAM BETTINA DR.
VIENNA (AT)

(54) **ERGONOMICALLY ADJUSTABLE BABY AND TODDLER CARRIER**

(57) The carrying device according to the invention is adjustable to the respective developmental stage and size of a baby or toddler being carried by means of a continuously adjustable bridge and back reduction (1) as well as a back extension (2, 3). The lateral support of smaller children is facilitated by a drawstring system (9) in the upper area of the curved back panel (7). The shoulder straps (12) of the carrying device can be variably fastened with screw carabiners (19) to a strap connection device (4) on the padded hip belt (6) or to a strap connection device (5) on the back panel (7), whereby connection to the hip belt (4, 6) ensures the healthy curved back posture of small babies; connection to the back panel (5, 7) leads to better weight distribution of the child on the wearer's hips. The shoulder straps (12) can be routed either parallel or crossed over the back of the wearer through the variable connection system. The carrying device also features a trapezoidal headrest (11) that is continuously adjustable via fastening straps (13) and loops (10), which can be used without third-party assistance.

FIG. 1

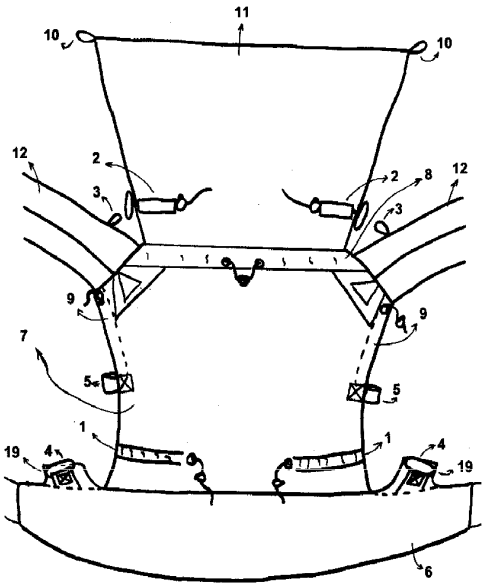

AT 11 620 U2 2011-02-15

DVR 0078018

Description

ERGONOMICALLY ADJUSTABLE BABY AND TODDLER CARRIER

1. TECHNICAL FIELD TO WHICH THE INVENTION RELATES

[0001] This invention concerns an ergonomically adjustable baby and toddler carrier designed to transport babies and toddlers up to approximately 15 kg in both front and back carrying positions.

2. STATE OF THE ART

[0002] Currently, there are a variety of baby and toddler carrying systems:

[0003] There are backpack carriers with metal and plastic structures for the child's seat, which are bulky and heavy, barely adaptable to the child's developmental stage, and suitable only for back carrying.

[0004] Furthermore, there are many front and back carriers with strap systems comparable to traditional backpacks, featuring straps with ladder locks, snap buckles, and padded hip belts. These carriers (hereafter referred to as "backpack carriers") are only somewhat adjustable to the child's developmental stage and do not fully provide the squat-spread posture essential for healthy hip development. For particularly small infants up to 7 months, this often results in overextension of the hip joints because the bridge, which should extend only between the knees, is still too wide. Additionally, these backpack carriers do not offer sufficient support for the infant's head or adequate lateral support. In all known backpack carriers, the shoulder straps terminate at the back part of the carrier, pressing the child's back straight and failing to ensure the ergonomic rounded back posture critical for healthy back development during carrying.

[0005] In addition to these backpack carriers, there are also padded comfort carriers, primarily in the back panel, that usually feature a very narrow bridge, which does not support the squat-spread posture and is therefore detrimental to healthy hip development. In these carriers, the child's legs dangle without support, and the child sits on the pubic bone, with boys sitting on the scrotum.

[0006] There are also fabric-based front and back carriers with strap systems that need to be tied, but these require significantly more expertise from the wearer compared to backpack carriers, and must be retied and adjusted with each use, making quick on and off transitions, such as for breastfeeding while on the go, impractical.

3. TECHNICAL PROBLEM OF THE INVENTION

[0007] The present invention aims to develop a front and back carrier for babies and toddlers that

[0008] - can be quickly put on and taken off using a backpack strap system and offers a high level of carrying comfort for the wearer (backpack carrier);

[0009] - simultaneously ensures the ergonomic curved back posture for the child;

[0010] - provides correct posture for the child while maintaining high carrying comfort for the wearer, both when carrying the child on the front and on the back, through variable strap routing;

[0011] - can be adjusted to the size of the child, particularly providing an ergonomic squat-spread posture, by means of a bridge and back reduction;

[0012] - offers sufficient lateral support for smaller babies;

[0013] - ensures good support for the child's head and neck area (especially when the child is sleeping) through a back extension and additional devices such as a drawstring in the neck area and an individually adjustable headrest, while also allowing the awake child to look out of the carrier;

[0014] - includes a device that allows the headrest to be easily raised and secured without third-party assistance to support the head of a sleeping child, even when the child is being carried on the back.

4. INVENTION AS CHARACTERIZED IN THE CLAIMS

4.1 Claim 1

[0015] The carrying device according to the invention includes a strap system modeled after a backpack strap system, characterized by the fact that the shoulder straps 12 can be routed variably either parallel (shown in FIG. 4) with an additional safety strap 16 or crossed (shown in FIG. 5) over the wearer's back, and can be variably attached either to a looped strap connection 4 on the hip belt 6 or a similarly looped strap connection 5 on the back panel 7 of the carrier. In the preferred embodiment, oval screw carabiners 19, such as those used in climbing, are employed (other strong connecting elements like twist-lock carabiners or similar could also be used to safely support the child's weight).

[0016] When attached to the hip belt 4, 6, the ergonomic rounded back posture, essential for healthy back development during the first months of life, is maintained; attachment to the back panel 5, 7 increases comfort when carrying heavier children.

4.2 Claim 2

[0017] The backpack carrier according to claim 1 is characterized by a bridge reduction that, in the preferred embodiment, is achieved by two drawstrings 1, which are positioned left and right in the lower area of the back panel 7, just above the padded hip belt 6. These drawstrings run toward the center of the back panel, and when tightened, reduce the bridge width (shown in FIG. 7). To prevent pressure points on the child, the fastening elements (cord stoppers in the preferred embodiment) are positioned toward the center of the back panel. The bridge reduction is implemented using a drawstring system with cords or straps sewn into the edges of the back panel 7, which are pulled outward in the direction of the center of the back panel 7 through eyelets and secured with cord stoppers. However, other fastening systems, such as straps with ladder locks, hook-and-loop fasteners, or snaps, could also be used.

4.3 Claim 3

[0018] The carrying device is further characterized by the simultaneous shortening of the back panel 7 when the bridge is reduced, making the carrier adjustable to the size of the child. This back shortening ensures adequate neck support for the child while also allowing them to look out of the carrier when awake.

4.4 Claim 4

[0019] The carrying device is further characterized by drawstrings 9 positioned on the left and right sides in the upper area of the back panel 7 (above the strap connection point on the back panel, 5. Tightening these drawstrings, due to the curved design of the back panel 7, ensures lateral support for the child in the carrier. Instead of the preferred drawstring design, a strap with a ladder lock or a system with hook-and-loop fasteners, buttons, hooks, or snaps could also be used.

4.5 Claim 5

[0020] The carrying device is further characterized by a back extension 2, 3 that can be adjusted to the individual size of the child and provides additional support for the head in younger children or for the back in older children. The back extension is characterized by two drawstrings 2 positioned left and right horizontally on the headrest, which are adjustable in length using cord stoppers and can be attached to loops 3 on the shoulder straps with buttons. In addition to the preferred fastening system with drawstrings and toggle buttons, other fastening systems, such as straps with ladder locks, hooks, or hook-and-loop fasteners, could be used.

4.6 Claim 6

[0021] The carrying device according to the previous claims features a trapezoidal headrest 11 for supporting the head of a sleeping child, characterized by the ability to easily raise it using straps 13 attached to the shoulder straps 12, even when the child is being carried on the back. These straps 13, attached to the shoulder straps, are equipped with hook-and-loop fasteners 17, 18 and are secured to loops 10 on the lower corners of the headrest 11 before placing the child in the carrier. When the child falls asleep while being carried on the back, the headrest can be easily raised and secured with the hook-and-loop fasteners 17, 18.

5. DRAWINGS

The following drawings are part of the utility model application:

FIG. 1	Overall view of the carrier with the headrest raised
FIG. 2	Overall view of the carrier with the headrest hanging down
FIG. 3	Front view of the carrier
FIG. 4	Rear view of the carrier with parallel strap routing
FIG. 5	Rear view of the carrier with crossed strap routing
FIG. 6	Side view of the carrier
FIG. 7	Bridge reduction and back shortening
FIG. 8	Back extension and additional neck support
FIG. 9	View of the carrier with back extension in use
FIG. 10	Headrest straps
FIG. 11	Fastening of the headrest and back extension

REFERENCE LIST

1	Bridge reduction and back shortening
2	Drawstring system for back extension and additional neck support
3	Loop on shoulder strap for back extension
4	Strap connection on hip belt
5	Strap connection on back panel
6	Hip belt
7	Back panel
8	Drawstring in the neck area

9	Drawstring in the upper area of the back panel
10	Loops on the headrest
11	Headrest
12	Shoulder strap
13	Strap for headrest attachment
14	Ladder lock on shoulder strap
15	Snap buckle on hip belt
16	Shoulder safety strap with snap buckle
17	Hook-and-loop fastener (rough) on headrest attachment strap
18	Hook-and-loop fastener (soft) on headrest attachment strap
19	Oval screw carabiner

6. DESCRIPTION OF THE INVENTION IN DETAIL

[0022] 6.1 The invention relates to a carrying aid, which consists of a fabric back panel 7, a trapezoidal fabric headrest 11 attached to the upper edge of the back panel 7, a hip belt 6 padded with thick foam, and two shoulder straps 12 also padded with foam. The hip belt is fastened with a snap buckle 15 at the hip area, and the shoulder straps are secured with ladder buckles 14. The use of the hip belt 6 distributes the weight of the child between the wearer's shoulders and hips.

[0023] 6.2 The back panel 7 has a curved design (as shown particularly in FIG. 1). The back panel is approximately 42 cm high and between 40 and 46 cm wide. The headrest 11 is trapezoidal, approximately 29 cm long, and 44 cm wide at its widest point.

[0024] 6.3 The carrying device can be used, depending on the size and weight of the child and the wearer's individual preference, either with the shoulder straps 12 attached to the hip belt 4, 6 or with the shoulder straps 12 attached to the back panel 5, 7. The strap connections 4, 5 are designed as loops, preferably made of webbing at least 3 cm wide.

[0025] 6.4 The two shoulder straps 12 of the carrier are length-adjustable using webbing and clamp ladder buckles 14. Each strap is designed to form a loop that can be attached to the strap connections on the hip belt 4 or back panel 5 as follows: The strap connections themselves are loops made of webbing material 4, 5. In the preferred embodiment, the shoulder straps are connected using oval screw carabiners 19, like those used in climbing. These screw carabiners 19 are threaded into the strap connection 4 or 5 on one side and into the loop of the shoulder strap 12 on the other side, then screwed closed to securely establish the connection. The length of the shoulder straps can be adjusted using the clamp ladder buckle 14.

[0026] 6.5 A strap connection 4 on the hip belt 6 is especially recommended for smaller children, particularly babies in the first months of life, as it ensures a healthy rounded back posture during the carrying process. For older children, whose back development is sufficiently advanced, a strap connection 5 on the back panel 7 is advantageous, as it better shifts the weight of the child to the wearer's hips, reducing the strain on the wearer's shoulders.

[0027] 6.6 Depending on the wearer's preference, the shoulder straps 12 can be routed parallel over the wearer's back (FIG. 4), where they can be secured with an additional safety strap with a snap buckle 16, or the shoulder straps 12 can be crossed over the wearer's back (FIG. 5). The carrying device can be used for carrying children on the front or back. In front-carry mode, the shoulder straps 12 run over the back; in back-carry mode, they run across the chest.

[0028] 6.7 To allow for size and developmental adjustments, a bridge reduction and back shortening feature 1 is included. In the preferred embodiment, this bridge reduction and back shortening (1) is achieved through two drawstrings located on the left and right in the lower part of the back panel, approximately 6 cm above the hip belt, and each about 13 cm long. Two cords or

straps are attached to the left and right of the back panel and are guided through the approximately 13 cm long drawstring channels toward the center, where they exit through eyelets to the outer side of the back panel. When using the bridge reduction and back shortening, these cords or straps are gathered and secured with cord stoppers (see FIG. 7).

[0029] 6.8 This bridge reduction 1 allows for stepless adjustment of the seat bridge, which can be set between approximately 42 cm and 22 cm in length. This ensures that the seat bridge lies exactly between the knees of smaller children. The correct width of the seat bridge is essential for achieving the healthy squat-spread posture, which contributes to good hip development. The seat bridge should extend from knee pit to knee pit. If the seat bridge is too narrow (as in most comfort carriers on the market), the child's legs dangle unsupported, and the hips, pubic bone, and – in boys – the scrotum are stressed. A bridge that is too wide, as seen in many backpack carriers, leads to overextension, which is harmful to the development of the hips and back.

[0030] 6.9 When the bridge reduction 1 is used, the described design simultaneously shortens the back panel vertically, further adjusting the size for smaller children. Additionally, the back panel forms a more pronounced pouch when the bridge reduction is used, further supporting the squat-spread posture.

[0031] 6.10 In the upper area of the back panel 7, drawstrings 9 are attached on the left and right sides. Due to the curved shape of the back panel, these drawstrings do not run completely vertically at a 90-degree angle but at approximately 105 degrees (left) and 75 degrees (right). This angle allows for lateral support of smaller babies when the drawstrings are used. Instead of the preferred drawstring design, a strap could be sewn in above the strap connection 5 that could be adjusted using a clamp ladder buckle at the top outer corner of the back panel 7. Alternatively, a fastening system using snap buckles, hooks, buttons, or hook-and-loop fasteners could be used.

[0032] 6.11 The carrying device also includes a back extension attached to the headrest 11 and connectable to loops 3 on the shoulder straps 12. This back extension works via two drawstrings 2 attached horizontally to the left and right of the headrest 11, approximately 5 cm above the connection between the headrest 11 and the back panel 7. These drawstrings 2 guide cords or straps that are secured in the middle with cord stoppers and fastened to buttons, preferably toggle buttons, at the outer ends. These toggle buttons are attached to loops 3 on the shoulder straps, extending the back part of the carrier. By designing it as a drawstring system 2, a size adjustment can also be made, meaning that the back extension can be tightened for smaller children, which provides additional neck support; for larger children, the necessary width can be achieved through the cord/strap and drawstring system. This back extension provides better upper back support for larger children. FIGS. 9 and 11 show how the back extension works in practice. FIG. 9 illustrates how the back extension naturally shortens the hanging headrest 11 while extending the back part vertically. FIG. 11 shows how the additional support for the head is achieved when the back extension is used.

[0033] 6.12 Another size adjustment feature is a drawstring 8 in the neck area. A cord or strap is sewn into the left and right sides of the back panel, exits through two eyelets in the center of the back panel, and can be tightened and secured with a double cord stopper as needed.

[0034] 6.13 Sleeping children can be secured in the carrier with a trapezoidal headrest 11. This headrest 11 is raised and secured using two loops 10 attached to the left and right outermost ends of the headrest 11, with approximately 40 cm long straps 13 attached to the shoulder straps 12. The straps 13 are threaded through loops 10 and secured with hook-and-loop fasteners 17, 18. The straps 13 each have a rough hook-and-loop section 17 near the shoulder strap 12 and three soft hook-and-loop sections 18, one located a short distance from the rough section, one in the middle, and one at the end of the strap. An additional soft hook-and-loop section can be attached to the middle of the strap 13.

[0035] 6.14 If the securing strap 13 is not needed or the headrest 11 is fully raised, the rough hook-and-loop section 17 can be attached to the nearest soft hook-and-loop section 18.

[0036] 6.15 Especially in back-carry mode, it is necessary for the wearer to be able to pull the headrest over the head of the sleeping child without third-party assistance. This is made possible by the last soft hook-and-loop section at the end of the securing straps 13. The securing straps 13 can be threaded through the loops 10 at the end of the headrest 11 before the carrying process and attached with the soft hook-and-loop sections 18 at the ends of the securing straps 13 to the rough hook-and-loop sections 17, which are directly attached to the shoulder straps 12. In this position, the headrest 11 hangs over the back panel 7 of the carrier. If the child falls asleep, the wearer can detach the soft hook-and-loop sections 18 at the outermost corners of the securing straps 13 from the rough hook-and-loop parts 17 on the shoulder straps 12 and raise the headrest 11 using the straps 13. Depending on the size of the child, the headrest is then attached to the shoulder straps 12 using either the centrally positioned soft hook-and-loop sections 18 or the soft hook-and-loop sections 18 located closer to the rough part 17. The headrest 11 can also be further adjusted by rolling it, as shown in FIG. 11, to fit the child's size.

Claims

1. Carrying device for babies or toddlers, with a back panel and, if necessary, a headrest for the baby or toddler, and with a strap system that includes shoulder straps and a hip belt, modeled after a backpack strap system, **characterized** in that the shoulder straps (12) are either routed parallel to each other (as shown in FIG. 4), with an additional safety strap (16) between the shoulder straps (12), or crossed over the wearer's back (as shown in FIG. 5). The straps can be variably attached either to a loop-shaped strap connection (4) on the hip belt (6), or to a loop-shaped strap connection (5) on the back panel (7) of the carrying device, particularly by means of oval screw carabiners (19) such as those used in climbing, or by twist-lock carabiners, or backpack buckles.

2. Carrying device according to claim 1, **characterized by** a bridge reduction and back panel shortening, preferably by means of two drawstrings (1) or straps, which are positioned on the left and right in the lower area of the back panel (7), above the hip belt (6), which is padded with firm foam, and run toward the center of the back panel (7). When tightened, these reduce the width of the bridge and shorten the back panel (7) (as shown in FIG. 7), where the drawstrings (1) are sewn into the edges of the back panel (7) and guided through eyelets toward the center of the back panel (7) to the outside, where they are secured with cord stoppers. Alternatively, the straps are equipped with ladder buckles, hook-and-loop fasteners, or snaps for securing.

3. Carrying device according to claim 1 or 2, **characterized by** adjustable drawstrings (9) or straps with ladder buckles, hook-and-loop fasteners, buttons, hooks, or snaps, positioned along the left and right, each curving outward, in the upper part of the back panel (7), above the strap connection (5) on the back panel (7). These are tightened with cord stoppers or ladder buckles, hook-and-loop fasteners, buttons, hooks, or snaps to provide lateral support for the child in the carrying device.

4. Carrying device according to any of claims 1 to 3, **characterized by** a back extension (2, 3) attached to the headrest (11), which can be adjusted to the individual size of the child. This adjustment is achieved through two adjustable drawstrings (2) or straps with ladder buckles, hooks, or snaps, positioned horizontally on the left and right sides of the headrest (11) and fastened to buttons on loops (3) on the shoulder straps (12) (as shown in FIG. 8).

5. Carrying device according to any of claims 1 to 4, **characterized** by a trapezoidal headrest (11) that can be raised and secured to the shoulder straps (12) using straps (13) with hook-and-loop fasteners (17, 18), which are threaded through loops (10) on the free corners of the headrest (11) and secured to the shoulder straps (12) (as shown in FIG. 11).

Including 7 sheets of drawings

FIG.
1

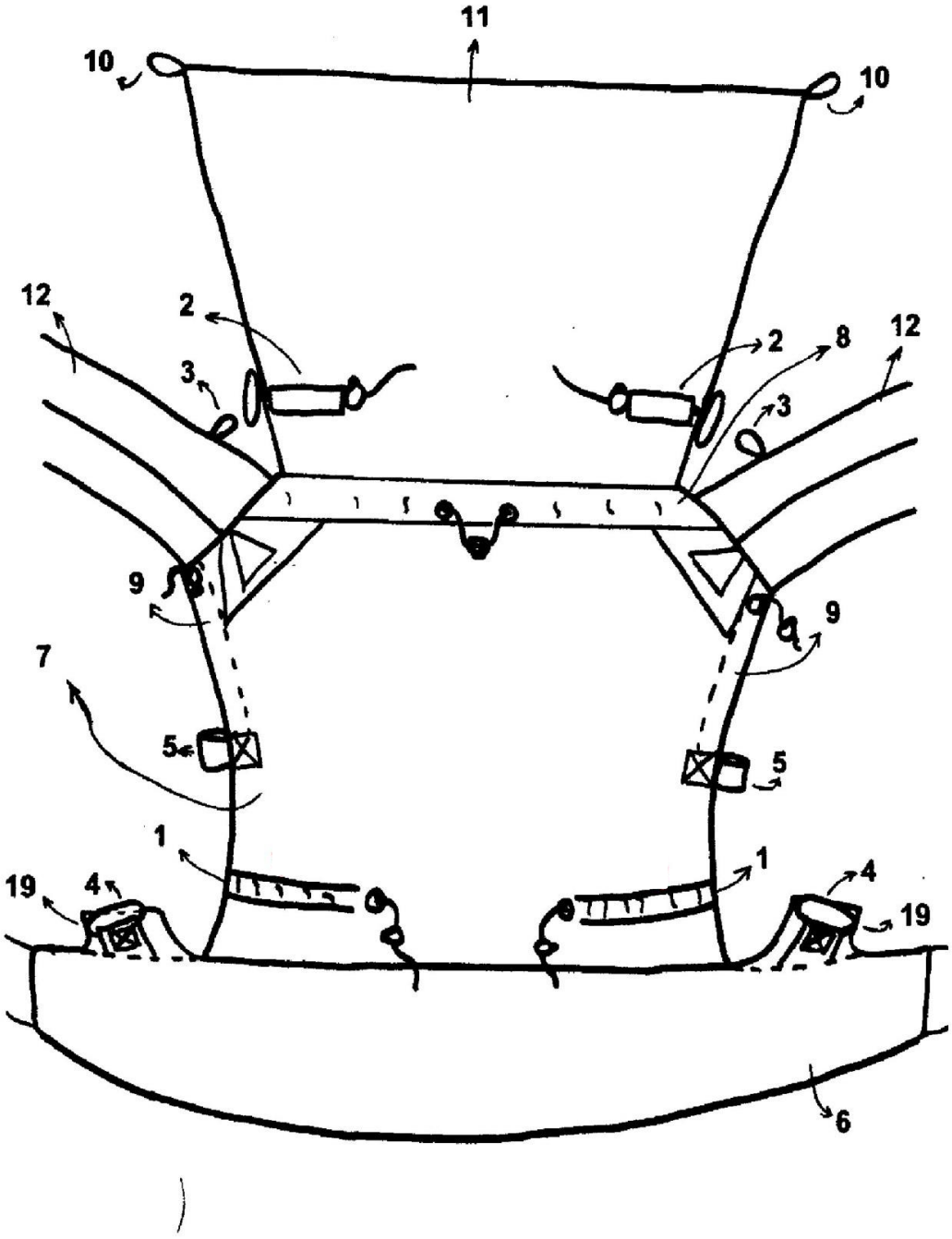

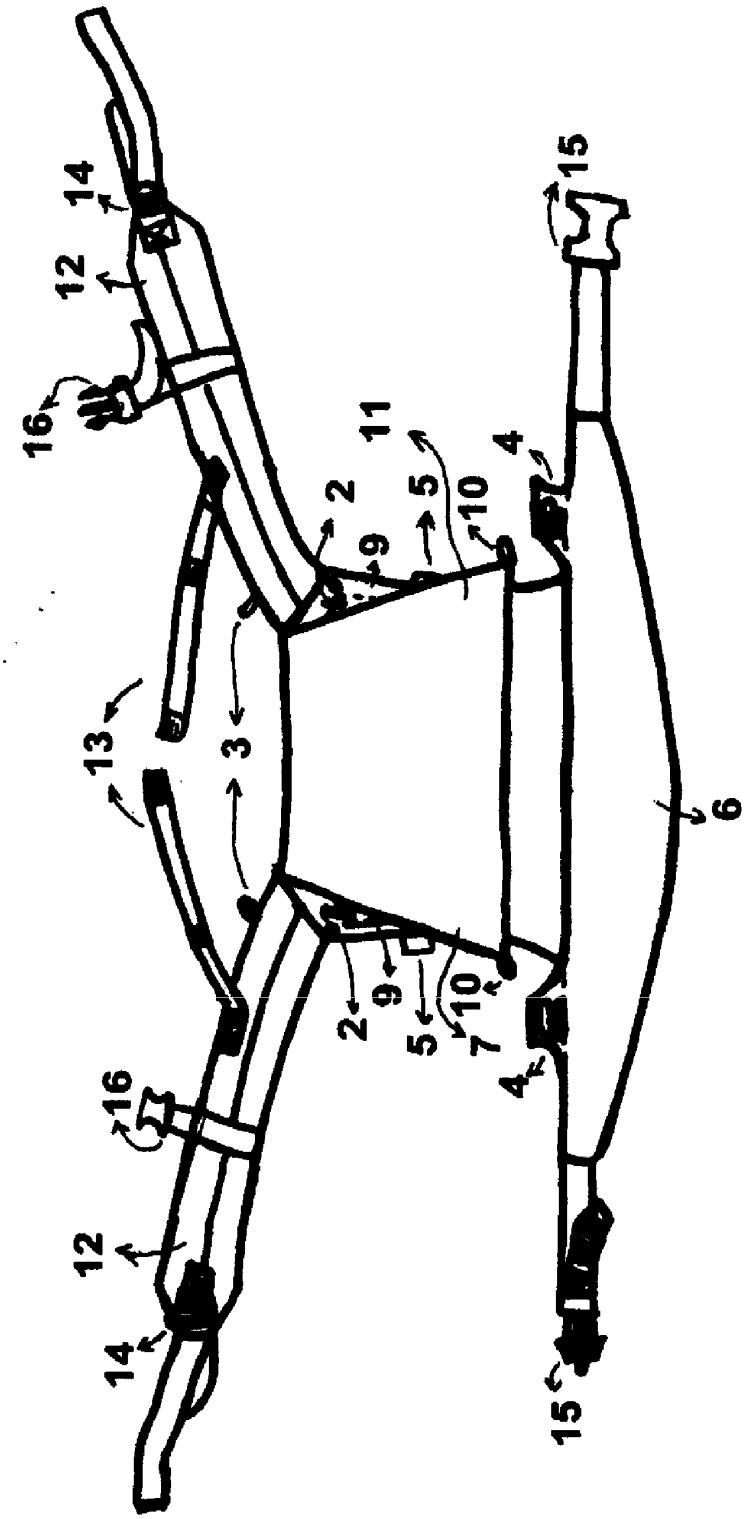

FIG. 2

FIG. 3

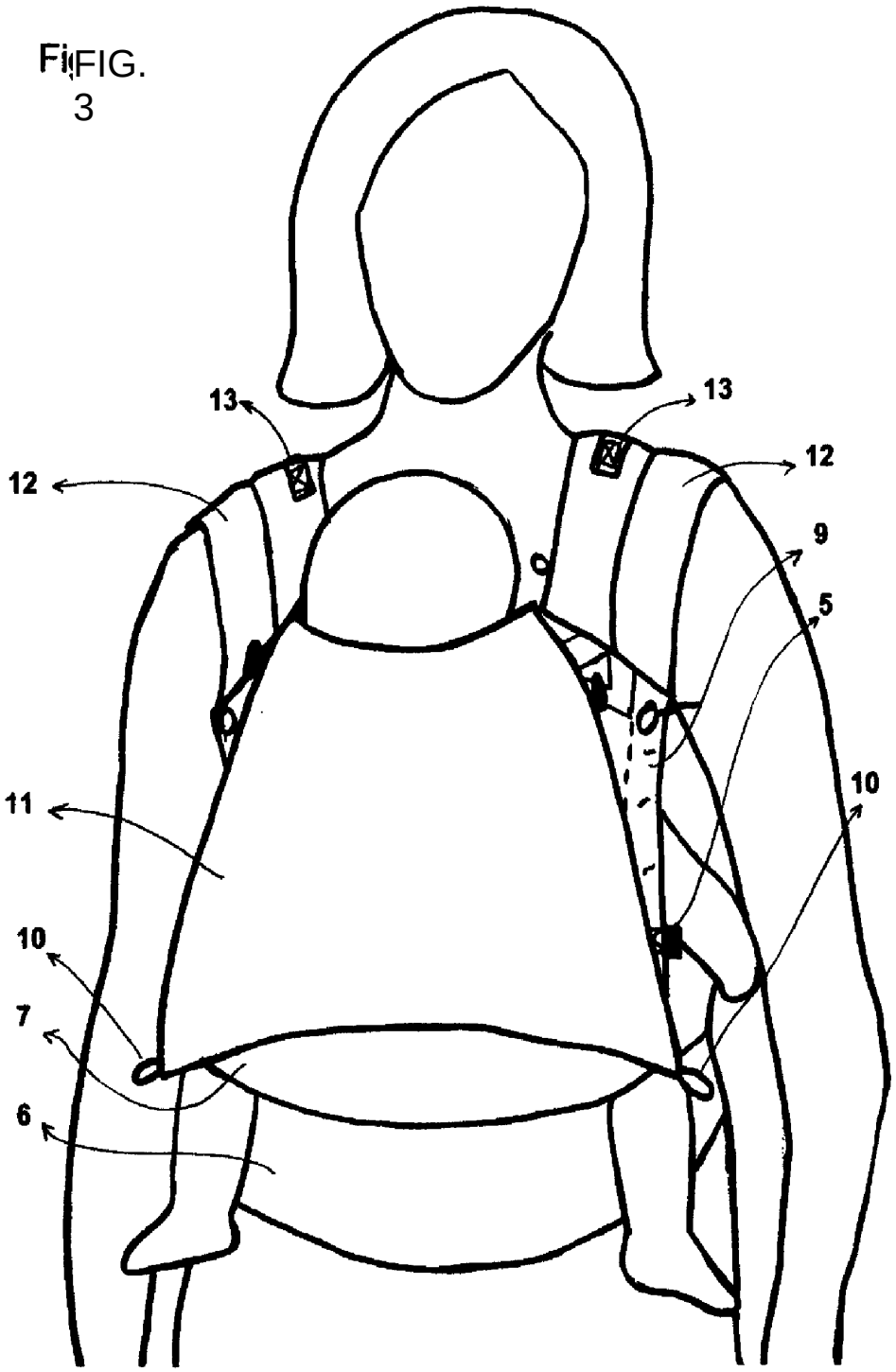

FIG. 5

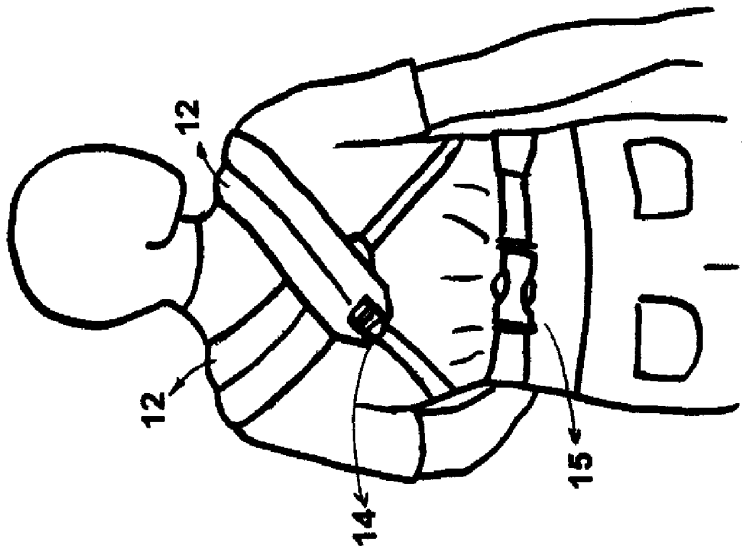

FIG. 4

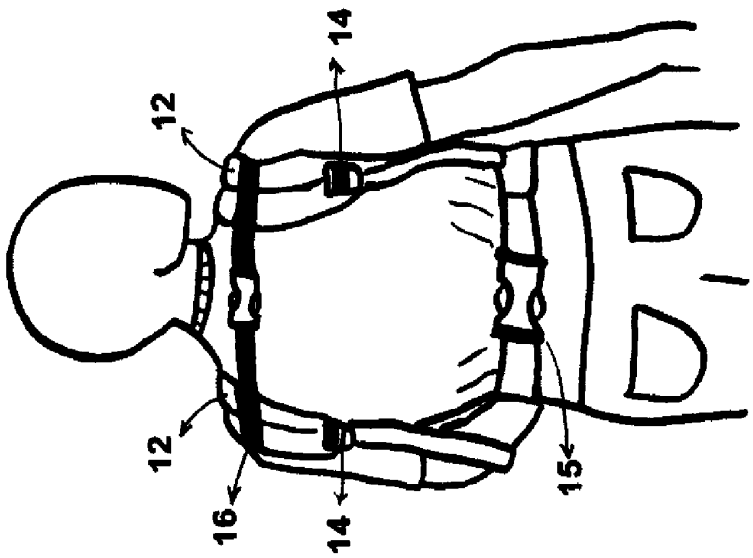

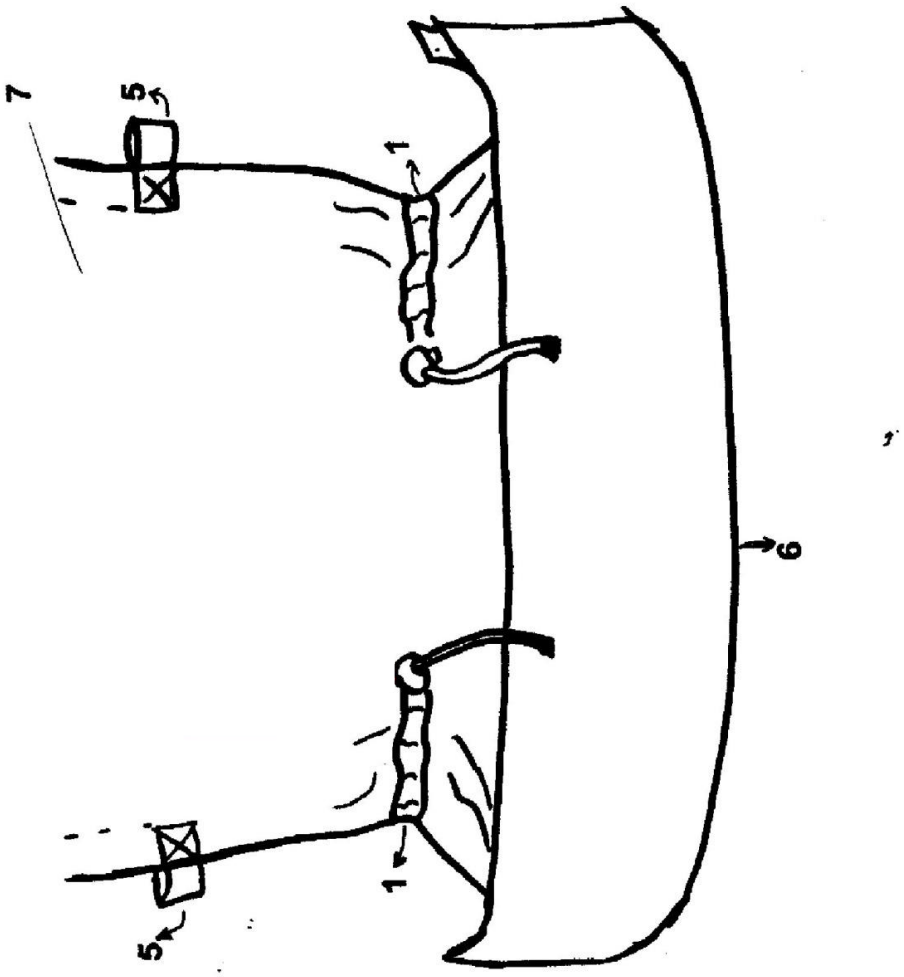

FIG. 7

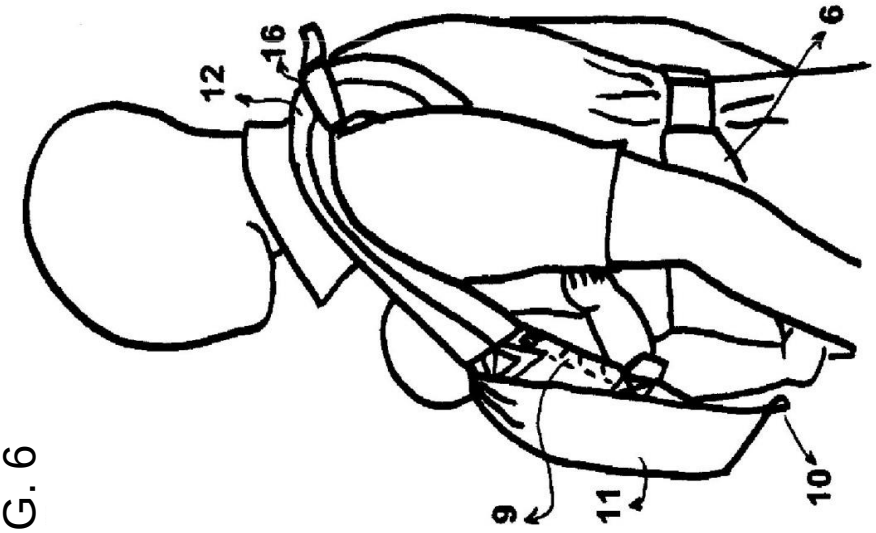

FIG. 6

FIG. 9

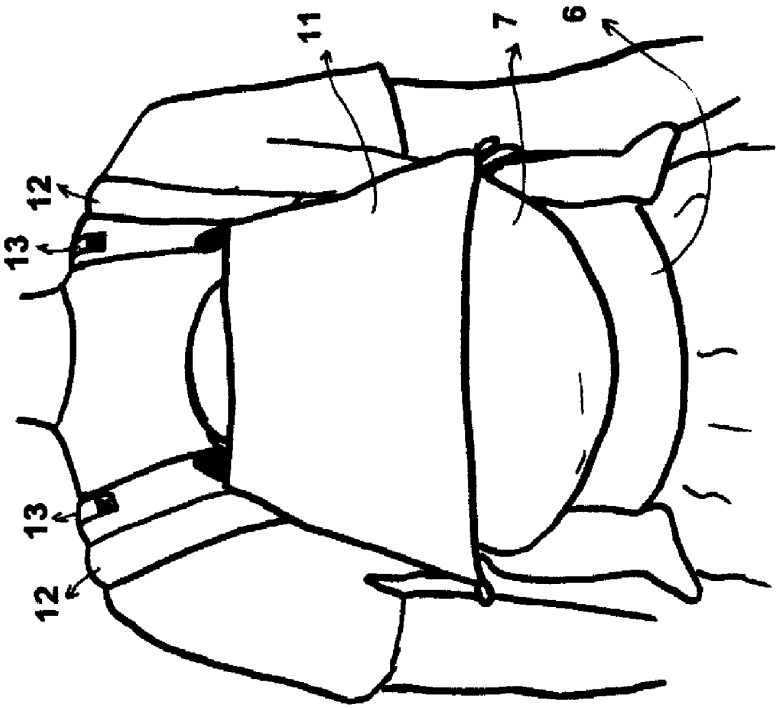

FIG. 8

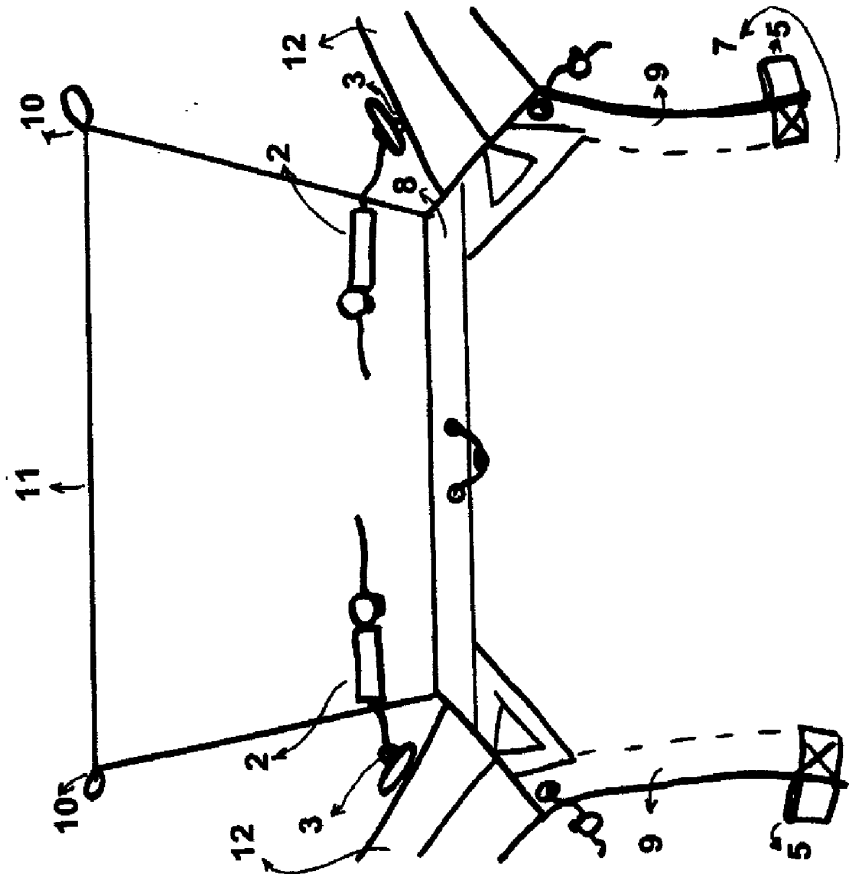

FIG. 11

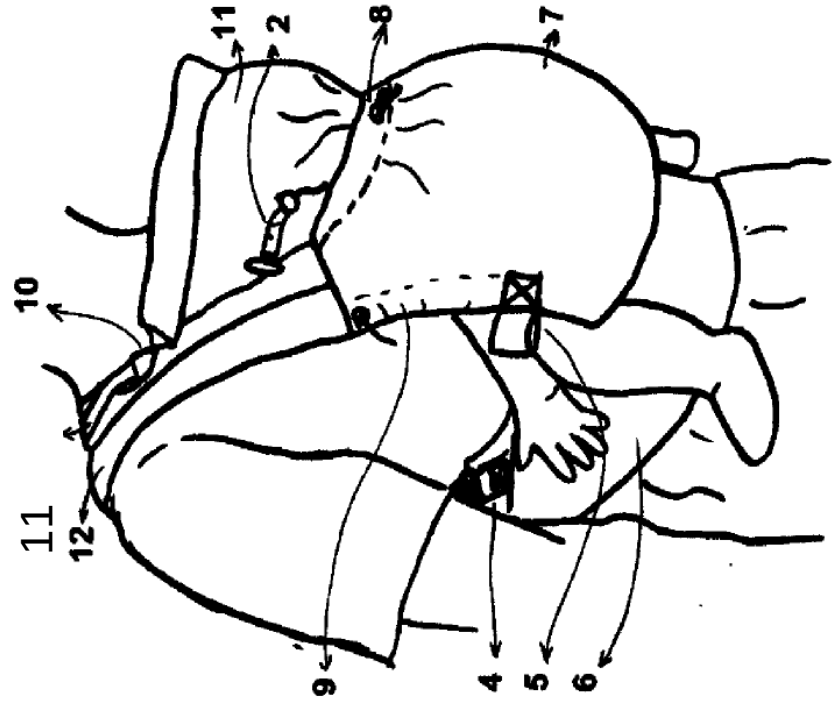

FIG. 10

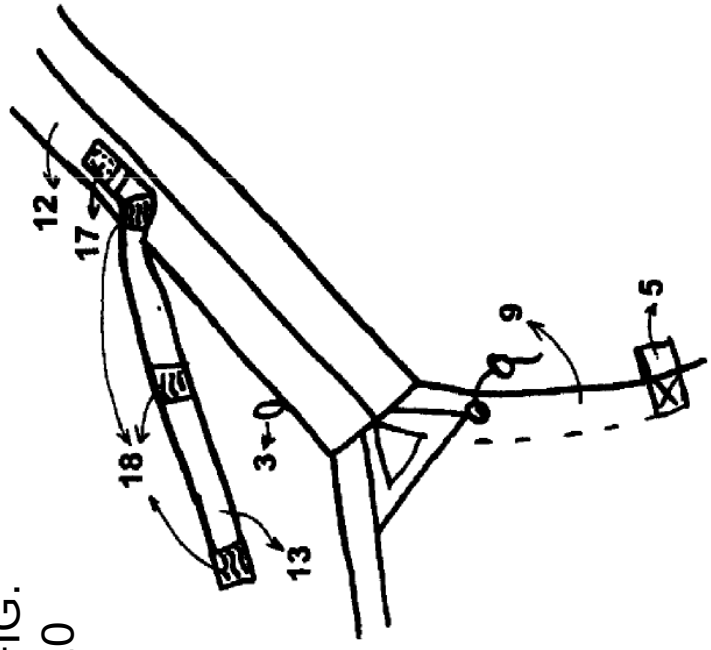

TRANSLATION CERTIFICATION

Date: 2024/09/24

To whom it may concern:

This is to certify that the attached translation is an accurate representation of the documents received by this office. The translation was completed from:

- German (Germany)

To:

- English (USA)

The documents are designated as:

- 'AT11620U2_D1 Original_document.pdf'

Oscar Ojeda, Project Manager in this company, attests to the following:

“To the best of my knowledge, the aforementioned documents are a true, full and accurate translation of the specified documents.”

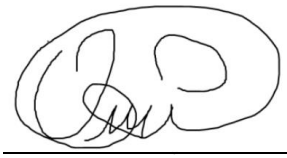

Signature of Oscar Ojeda, Project Manager