CERTIFICATION AND REQUEST FOR PRIORITIZED EXAMINATION UNDER 37 CFR 1.102(e) (Page 1 of 1)

First Named Inventor:	Rodney V. Telford	Nonprovisional Application Number (if known):	
Title of Invention:	ADJUSTABLE CHILD CARRIER		

APPLICANT HEREBY CERTIFIES THE FOLLOWING AND REQUESTS PRIORITIZED EXAMINATION FOR THE ABOVE-IDENTIFIED APPLICATION.

1. The processing fee set forth in 37 CFR 1.17(i)(1) and the prioritized examination fee set forth in 37 CFR 1.17(c) have been filed with the request. The publication fee requirement is met because that fee, set forth in 37 CFR 1.18(d), is currently $0. The basic filing fee, search fee, and examination fee are filed with the request or have been already been paid. I understand that any required excess claims fees or application size fee must be paid for the application.

2. I understand that the application may not contain, or be amended to contain, more than four independent claims, more than thirty total claims, or any multiple dependent claims, and that any request for an extension of time will cause an outstanding Track I request to be dismissed.

3. The applicable box is checked below:

I. ☑ Original Application (Track One) - Prioritized Examination under § 1.102(e)(1)

i. (a) The application is an original nonprovisional utility application filed under 35 U.S.C. 111(a). This certification and request is being filed with the utility application via EFS-Web.

---OR---

(b) The application is an original nonprovisional plant application filed under 35 U.S.C. 111(a). This certification and request is being filed with the plant application in paper.

ii. An executed inventor's oath or declaration under 37 CFR 1.63 or 37 CFR 1.64 for each inventor, **or** the application data sheet meeting the conditions specified in 37 CFR 1.53(f)(3)(i) is filed with the application.

II. ☐ Request for Continued Examination - Prioritized Examination under § 1.102(e)(2)

i. A request for continued examination has been filed with, or prior to, this form.
ii. If the application is a utility application, this certification and request is being filed via EFS-Web.
iii. The application is an original nonprovisional utility application filed under 35 U.S.C. 111(a), or is a national stage entry under 35 U.S.C. 371.
iv. This certification and request is being filed prior to the mailing of a first Office action responsive to the request for continued examination.
v. No prior request for continued examination has been granted prioritized examination status under 37 CFR 1.102(e)(2).

Signature /Jennifer C. Bailey/	Date April 20, 2023
Name (Print/Typed) Jennifer C. Bailey	Practitioner Registration Number 52583

Note: *This form must be signed in accordance with 37 CFR 1.33. See 37 CFR 1.4(d) for signature requirements and certifications. Submit multiple forms if more than one signature is required.**

☐ *Total of _____ forms are submitted.

Privacy Act Statement

The **Privacy Act of 1974 (P.L. 93-579)** requires that you be given certain information in connection with your submission of the attached form related to a patent application or patent. Accordingly, pursuant to the requirements of the Act, please be advised that: (1) the general authority for the collection of this information is 35 U.S.C. 2(b)(2); (2) furnishing of the information solicited is voluntary; and (3) the principal purpose for which the information is used by the U.S. Patent and Trademark Office is to process and/or examine your submission related to a patent application or patent. If you do not furnish the requested information, the U.S. Patent and Trademark Office may not be able to process and/or examine your submission, which may result in termination of proceedings or abandonment of the application or expiration of the patent.

The information provided by you in this form will be subject to the following routine uses:

1. The information on this form will be treated confidentially to the extent allowed under the Freedom of Information Act (5 U.S.C. 552) and the Privacy Act (5 U.S.C 552a). Records from this system of records may be disclosed to the Department of Justice to determine whether disclosure of these records is required by the Freedom of Information Act.
2. A record from this system of records may be disclosed, as a routine use, in the course of presenting evidence to a court, magistrate, or administrative tribunal, including disclosures to opposing counsel in the course of settlement negotiations.
3. A record in this system of records may be disclosed, as a routine use, to a Member of Congress submitting a request involving an individual, to whom the record pertains, when the individual has requested assistance from the Member with respect to the subject matter of the record.
4. A record in this system of records may be disclosed, as a routine use, to a contractor of the Agency having need for the information in order to perform a contract. Recipients of information shall be required to comply with the requirements of the Privacy Act of 1974, as amended, pursuant to 5 U.S.C. 552a(m).
5. A record related to an International Application filed under the Patent Cooperation Treaty in this system of records may be disclosed, as a routine use, to the International Bureau of the World Intellectual Property Organization, pursuant to the Patent Cooperation Treaty.
6. A record in this system of records may be disclosed, as a routine use, to another federal agency for purposes of National Security review (35 U.S.C. 181) and for review pursuant to the Atomic Energy Act (42 U.S.C. 218(c)).
7. A record from this system of records may be disclosed, as a routine use, to the Administrator, General Services, or his/her designee, during an inspection of records conducted by GSA as part of that agency's responsibility to recommend improvements in records management practices and programs, under authority of 44 U.S.C. 2904 and 2906. Such disclosure shall be made in accordance with the GSA regulations governing inspection of records for this purpose, and any other relevant (*i.e.*, GSA or Commerce) directive. Such disclosure shall not be used to make determinations about individuals.
8. A record from this system of records may be disclosed, as a routine use, to the public after either publication of the application pursuant to 35 U.S.C. 122(b) or issuance of a patent pursuant to 35 U.S.C. 151. Further, a record may be disclosed, subject to the limitations of 37 CFR 1.14, as a routine use, to the public if the record was filed in an application which became abandoned or in which the proceedings were terminated and which application is referenced by either a published application, an application open to public inspection or an issued patent.
9. A record from this system of records may be disclosed, as a routine use, to a Federal, State, or local law enforcement agency, if the USPTO becomes aware of a violation or potential violation of law or regulation.

Under the Paperwork Reduction Act of 1995, no persons are required to respond to a collection of information unless it contains a valid OMB control number.

Application Data Sheet 37 CFR 1.76	Attorney Docket Number	2877-11.15
	Application Number	
Title of Invention	ADJUSTABLE CHILD CARRIER	

The application data sheet is part of the provisional or nonprovisional application for which it is being submitted. The following form contains the bibliographic data arranged in a format specified by the United States Patent and Trademark Office as outlined in 37 CFR 1.76.
This document may be completed electronically and submitted to the Office in electronic format using the Electronic Filing System (EFS) or the document may be printed and included in a paper filed application.

Secrecy Order 37 CFR 5.2:

☐ Portions or all of the application associated with this Application Data Sheet may fall under a Secrecy Order pursuant to 37 CFR 5.2 (Paper filers only. Applications that fall under Secrecy Order may not be filed electronically.)

Inventor Information:

Inventor 1 Remove

Legal Name

Prefix	Given Name	Middle Name	Family Name	Suffix
	Rodney	V.	Telford	

Residence Information (Select One) ● US Residency Non US Residency Active US Military Service

City	Torrance	State/Province	CA	Country of Residence i	US

Mailing Address of Inventor:

Address 1	680 Knox Street		
Address 2	Suite 125		
City	Torrance	State/Province	CA
Postal Code	90502	Country i	US

All Inventors Must Be Listed - Additional Inventor Information blocks may be generated within this form by selecting the **Add** button. Add

Correspondence Information:

Enter either Customer Number or complete the Correspondence Information section below.
For further information see 37 CFR 1.33(a).

☐ **An Address is being provided for the correspondence Information of this application.**

Customer Number	118925		
Email Address	patents@eriseip.com	Add Email	Remove Email

Application Information:

Title of the Invention	ADJUSTABLE CHILD CARRIER		
Attorney Docket Number	2877-11.15	Small Entity Status Claimed	☐
Application Type	Nonprovisional		
Subject Matter	Utility		
Total Number of Drawing Sheets (if any)	9	Suggested Figure for Publication (if any)	1

Under the Paperwork Reduction Act of 1995, no persons are required to respond to a collection of information unless it contains a valid OMB control number.

Application Data Sheet 37 CFR 1.76	Attorney Docket Number	2877-11.15
	Application Number	
Title of Invention	ADJUSTABLE CHILD CARRIER	

Filing By Reference:

Only complete this section when filing an application by reference under 35 U.S.C. 111(c) and 37 CFR 1.57(a). Do not complete this section if application papers including a specification and any drawings are being filed. Any domestic benefit or foreign priority information must be provided in the appropriate section(s) below (i.e., "Domestic Benefit/National Stage Information" and "Foreign Priority Information").

For the purposes of a filing date under 37 CFR 1.53(b), the description and any drawings of the present application are replaced by this reference to the previously filed application, subject to conditions and requirements of 37 CFR 1.57(a).

Application number of the previously filed application	Filing date (YYYY-MM-DD)	Intellectual Property Authority or Country

Publication Information:

☐ Request Early Publication (Fee required at time of Request 37 CFR 1.219)

☐ **Request Not to Publish.** I hereby request that the attached application not be published under 35 U.S.C. 122(b) and certify that the invention disclosed in the attached application **has not and will not** be the subject of an application filed in another country, or under a multilateral international agreement, that requires publication at eighteen months after filing.

Representative Information:

Representative information should be provided for all practitioners having a power of attorney in the application. Providing this information in the Application Data Sheet does not constitute a power of attorney in the application (see 37 CFR 1.32).
Either enter Customer Number or complete the Representative Name section below. If both sections are completed the customer Number will be used for the Representative Information during processing.

Please Select One:	● Customer Number	US Patent Practitioner	◯ Limited Recognition (37 CFR 11.9)
Customer Number	118925		

Domestic Benefit/National Stage Information:

This section allows for the applicant to either claim benefit under 35 U.S.C. 119(e), 120, 121, 365(c), or 386(c) or indicate National Stage entry from a PCT application. Providing benefit claim information in the Application Data Sheet constitutes the specific reference required by 35 U.S.C. 119(e) or 120, and 37 CFR 1.78.
When referring to the current application, please leave the "Application Number" field blank.

Prior Application Status	Pending		Remove
Application Number	Continuity Type	Prior Application Number	Filing or 371(c) Date (YYYY-MM-DD)
	Continuation of	18108979	2023-02-13

Under the Paperwork Reduction Act of 1995, no persons are required to respond to a collection of information unless it contains a valid OMB control number.

Application Data Sheet 37 CFR 1.76	Attorney Docket Number	2877-11.15
	Application Number	
Title of Invention	ADJUSTABLE CHILD CARRIER	

Prior Application Status	Patented				Remove
Application Number	Continuity Type	Prior Application Number	Filing Date (YYYY-MM-DD)	Patent Number	Issue Date (YYYY-MM-DD)
18108979	Continuation of	17349821	2021-06-16	11583104	2023-02-21
Prior Application Status	Patented				Remove
Application Number	Continuity Type	Prior Application Number	Filing Date (YYYY-MM-DD)	Patent Number	Issue Date (YYYY-MM-DD)
17349821	Continuation of	16551286	2019-08-26	11051634	2021-07-26
Prior Application Status	Patented				Remove
Application Number	Continuity Type	Prior Application Number	Filing Date (YYYY-MM-DD)	Patent Number	Issue Date (YYYY-MM-DD)
16551286	Continuation of	15337813	2016-10-26	10426275	2019-10-09
Prior Application Status	Expired				Remove
Application Number	Continuity Type	Prior Application Number	Filing or 371(c) Date (YYYY-MM-DD)		
15337813	Claims benefit of provisional	62248745	2015-10-31		

Additional Domestic Benefit/National Stage Data may be generated within this form by selecting the **Add** button. Add

Foreign Priority Information:

This section allows for the applicant to claim priority to a foreign application. Providing this information in the application data sheet constitutes the claim for priority as required by 35 U.S.C. 119(b) and 37 CFR 1.55. When priority is claimed to a foreign application that is eligible for retrieval under the priority document exchange program (PDX)[i] the information will be used by the Office to automatically attempt retrieval pursuant to 37 CFR 1.55(i)(1) and (2). Under the PDX program, applicant bears the ultimate responsibility for ensuring that a copy of the foreign application is received by the Office from the participating foreign intellectual property office, or a certified copy of the foreign priority application is filed, within the time period specified in 37 CFR 1.55(g)(1).

Remove

Application Number	Country[i]	Filing Date (YYYY-MM-DD)	Access Code[i] (if applicable)

Additional Foreign Priority Data may be generated within this form by selecting the **Add** button. Add

Statement under 37 CFR 1.55 or 1.78 for AIA (First Inventor to File) Transition Applications

Under the Paperwork Reduction Act of 1995, no persons are required to respond to a collection of information unless it contains a valid OMB control number.

Application Data Sheet 37 CFR 1.76	Attorney Docket Number	2877-11.15
	Application Number	
Title of Invention	ADJUSTABLE CHILD CARRIER	

☐ This application (1) claims priority to or the benefit of an application filed before March 16, 2013 and (2) also contains, or contained at any time, a claim to a claimed invention that has an effective filing date on or after March 16, 2013.
NOTE: By providing this statement under 37 CFR 1.55 or 1.78, this application, with a filing date on or after March 16, 2013, will be examined under the first inventor to file provisions of the AIA.

Application Data Sheet 37 CFR 1.76	Attorney Docket Number	2877-11.15
	Application Number	
Title of Invention	ADJUSTABLE CHILD CARRIER	

Authorization or Opt-Out of Authorization to Permit Access:

When this Application Data Sheet is properly signed and filed with the application, applicant has provided written authority to permit a participating foreign intellectual property (IP) office access to the instant application-as-filed (see paragraph A in subsection 1 below) and the European Patent Office (EPO) access to any search results from the instant application (see paragraph B in subsection 1 below).

Should applicant choose not to provide an authorization identified in subsection 1 below, applicant **must opt-out** of the authorization by checking the corresponding box A or B or both in subsection 2 below.

NOTE: This section of the Application Data Sheet is **ONLY** reviewed and processed with the **INITIAL** filing of an application. After the initial filing of an application, an Application Data Sheet cannot be used to provide or rescind authorization for access by a foreign IP office(s). Instead, Form PTO/SB/39 or PTO/SB/69 must be used as appropriate.

1. Authorization to Permit Access by a Foreign Intellectual Property Office(s)

A. Priority Document Exchange (PDX) - Unless box A in subsection 2 (opt-out of authorization) is checked, the undersigned hereby **grants the USPTO authority** to provide the European Patent Office (EPO), the Japan Patent Office (JPO), the Korean Intellectual Property Office (KIPO), the State Intellectual Property Office of the People's Republic of China (SIPO), the World Intellectual Property Organization (WIPO), and any other foreign intellectual property office participating with the USPTO in a bilateral or multilateral priority document exchange agreement in which a foreign application claiming priority to the instant patent application is filed, access to: (1) the instant patent application-as-filed and its related bibliographic data, (2) any foreign or domestic application to which priority or benefit is claimed by the instant application and its related bibliographic data, and (3) the date of filing of this Authorization. See 37 CFR 1.14(h)(1).

B. Search Results from U.S. Application to EPO - Unless box B in subsection 2 (opt-out of authorization) is checked, the undersigned hereby **grants the USPTO authority** to provide the EPO access to the bibliographic data and search results from the instant patent application when a European patent application claiming priority to the instant patent application is filed. See 37 CFR 1.14(h)(2).

The applicant is reminded that the EPO's Rule 141(1) EPC (European Patent Convention) requires applicants to submit a copy of search results from the instant application without delay in a European patent application that claims priority to the instant application.

2. Opt-Out of Authorizations to Permit Access by a Foreign Intellectual Property Office(s)

☐ A. Applicant **DOES NOT** authorize the USPTO to permit a participating foreign IP office access to the instant application-as-filed. If this box is checked, the USPTO will not be providing a participating foreign IP office with any documents and information identified in subsection 1A above.

☐ B. Applicant **DOES NOT** authorize the USPTO to transmit to the EPO any search results from the instant patent application. If this box is checked, the USPTO will not be providing the EPO with search results from the instant application.

NOTE: Once the application has published or is otherwise publicly available, the USPTO may provide access to the application in accordance with 37 CFR 1.14.

Under the Paperwork Reduction Act of 1995, no persons are required to respond to a collection of information unless it contains a valid OMB control number.

Application Data Sheet 37 CFR 1.76	Attorney Docket Number	2877-11.15
	Application Number	
Title of Invention	ADJUSTABLE CHILD CARRIER	

Applicant Information:

Providing assignment information in this section does not substitute for compliance with any requirement of part 3 of Title 37 of CFR to have an assignment recorded by the Office.

Applicant 1 Remove

If the applicant is the inventor (or the remaining joint inventor or inventors under 37 CFR 1.45), this section should not be completed. The information to be provided in this section is the name and address of the legal representative who is the applicant under 37 CFR 1.43; or the name and address of the assignee, person to whom the inventor is under an obligation to assign the invention, or person who otherwise shows sufficient proprietary interest in the matter who is the applicant under 37 CFR 1.46. If the applicant is an applicant under 37 CFR 1.46 (assignee, person to whom the inventor is obligated to assign, or person who otherwise shows sufficient proprietary interest) together with one or more joint inventors, then the joint inventor or inventors who are also the applicant should be identified in this section. Clear

● Assignee	Legal Representative under 35 U.S.C. 117	Joint Inventor
Person to whom the inventor is obligated to assign.	Person who shows sufficient proprietary interest	

If applicant is the legal representative, indicate the authority to file the patent application, the inventor is:

Name of the Deceased or Legally Incapacitated Inventor:

If the Applicant is an Organization check here. ☒

Organization Name	The ERGO Baby Carrier, Inc.		
Mailing Address Information For Applicant:			
Address 1	680 Knox Street		
Address 2	Suite 125		
City	Torrance	**State/Province**	CA
Country	US	Postal Code	90502
Phone Number		Fax Number	
Email Address			

Additional Applicant Data may be generated within this form by selecting the Add button. Add

Assignee Information including Non-Applicant Assignee Information:

Providing assignment information in this section does not substitute for compliance with any requirement of part 3 of Title 37 of CFR to have an assignment recorded by the Office.

Under the Paperwork Reduction Act of 1995, no persons are required to respond to a collection of information unless it contains a valid OMB control number.

Application Data Sheet 37 CFR 1.76	Attorney Docket Number	2877-11.15
	Application Number	
Title of Invention	ADJUSTABLE CHILD CARRIER	

Assignee 1

Complete this section if assignee information, including non-applicant assignee information, is desired to be included on the patent application publication. An assignee-applicant identified in the "Applicant Information" section will appear on the patent application publication as an applicant. For an assignee-applicant, complete this section only if identification as an assignee is also desired on the patent application publication.

Remove

If the Assignee or Non-Applicant Assignee is an Organization check here. ☐

Prefix	**Given Name**	Middle Name	**Family Name**	Suffix

Mailing Address Information For Assignee including Non-Applicant Assignee:

Address 1			
Address 2			
City		**State/Province**	
Country i		Postal Code	
Phone Number		Fax Number	
Email Address			

Additional Assignee or Non-Applicant Assignee Data may be generated within this form by selecting the Add button. Add

Signature:

Remove

NOTE: This Application Data Sheet must be signed in accordance with 37 CFR 1.33(b). **However, if this Application Data Sheet is submitted with the INITIAL filing of the application and either box A or B is not checked in subsection 2 of the "Authorization or Opt-Out of Authorization to Permit Access" section, then this form must also be signed in accordance with 37 CFR 1.14(c).**

This Application Data Sheet **must** be signed by a patent practitioner if one or more of the applicants is a **juristic entity** (e.g., corporation or association). If the applicant is two or more joint inventors, this form must be signed by a patent practitioner, **all** joint inventors who are the applicant, or one or more joint inventor-applicants who have been given power of attorney (e.g., see USPTO Form PTO/AIA/81) on behalf of **all** joint inventor-applicants.

See 37 CFR 1.4(d) for the manner of making signatures and certifications.

Signature	/Jennifer C. Bailey/			Date (YYYY-MM-DD)	2023-04-20
First Name	Jennifer	Last Name	Bailey	Registration Number	52583

Additional Signature may be generated within this form by selecting the Add button. Add

Application Data Sheet 37 CFR 1.76	Attorney Docket Number	2877-11.15
	Application Number	
Title of Invention	ADJUSTABLE CHILD CARRIER	

This collection of information is required by 37 CFR 1.76. The information is required to obtain or retain a benefit by the public which is to file (and by the USPTO to process) an application. Confidentiality is governed by 35 U.S.C. 122 and 37 CFR 1.14. This collection is estimated to take 23 minutes to complete, including gathering, preparing, and submitting the completed application data sheet form to the USPTO. Time will vary depending upon the individual case. Any comments on the amount of time you require to complete this form and/or suggestions for reducing this burden, should be sent to the Chief Information Officer, U.S. Patent and Trademark Office, U.S. Department of Commerce, P.O. Box 1450, Alexandria, VA 22313-1450. DO NOT SEND FEES OR COMPLETED FORMS TO THIS ADDRESS. **SEND TO: Commissioner for Patents, P.O. Box 1450, Alexandria, VA 22313-1450.**

Privacy Act Statement

The Privacy Act of 1974 (P.L. 93-579) requires that you be given certain information in connection with your submission of the attached form related to a patent application or patent. Accordingly, pursuant to the requirements of the Act, please be advised that: (1) the general authority for the collection of this information is 35 U.S.C. 2(b)(2); (2) furnishing of the information solicited is voluntary; and (3) the principal purpose for which the information is used by the U.S. Patent and Trademark Office is to process and/or examine your submission related to a patent application or patent. If you do not furnish the requested information, the U.S. Patent and Trademark Office may not be able to process and/or examine your submission, which may result in termination of proceedings or abandonment of the application or expiration of the patent.

The information provided by you in this form will be subject to the following routine uses:

1 The information on this form will be treated confidentially to the extent allowed under the Freedom of Information Act (5 U.S.C. 552) and the Privacy Act (5 U.S.C. 552a). Records from this system of records may be disclosed to the Department of Justice to determine whether the Freedom of Information Act requires disclosure of these records.

2. A record from this system of records may be disclosed, as a routine use, in the course of presenting evidence to a court, magistrate, or administrative tribunal, including disclosures to opposing counsel in the course of settlement negotiations.

3 A record in this system of records may be disclosed, as a routine use, to a Member of Congress submitting a request involving an individual, to whom the record pertains, when the individual has requested assistance from the Member with respect to the subject matter of the record.

4. A record in this system of records may be disclosed, as a routine use, to a contractor of the Agency having need for the information in order to perform a contract. Recipients of information shall be required to comply with the requirements of the Privacy Act of 1974, as amended, pursuant to 5 U.S.C. 552a(m).

5. A record related to an International Application filed under the Patent Cooperation Treaty in this system of records may be disclosed, as a routine use, to the International Bureau of the World Intellectual Property Organization, pursuant to the Patent CooperationTreaty.

6. A record in this system of records may be disclosed, as a routine use, to another federal agency for purposes of National Security review (35 U.S.C. 181) and for review pursuant to the Atomic Energy Act (42 U.S.C. 218(c)).

7. A record from this system of records may be disclosed, as a routine use, to the Administrator, General Services, or his/her designee, during an inspection of records conducted by GSA as part of that agency's responsibility to recommend improvements in records management practices and programs, under authority of 44 U.S.C. 2904 and 2906. Such disclosure shall be made in accordance with the GSA regulations governing inspection of records for this purpose, and any other relevant (i.e., GSA or Commerce) directive. Such disclosure shall not be used to make determinations about individuals.

8. A record from this system of records may be disclosed, as a routine use, to the public after either publication of the application pursuant to 35 U.S.C. 122(b) or issuance of a patent pursuant to 35 U.S.C. 151. Further, a record may be disclosed, subject to the limitations of 37 CFR 1.14, as a routine use, to the public if the record was filed in an application which became abandoned or in which the proceedings were terminated and which application is referenced by either a published application, an application open to public inspections or an issued patent.

9. A record from this system of records may be disclosed, as a routine use, to a Federal, State, or local law enforcement agency, if the USPTO becomes aware of a violation or potential violation of law or regulation.

ADJUSTABLE CHILD CARRIER

RELATED APPLICATION

[0001] This application is a continuation of U.S. Patent Application Ser. No. 18/108,979, filed February 13, 2023; which is a continuation of U.S. Patent Application Ser. No. 17/349,821 filed June 16, 2021, now U.S. Patent No. 11,583,104 issued February 21, 2023; which is a continuation of U.S. Patent Application Ser. No. 16/551,286 filed August 26, 2019, now U.S. Patent No. 11,051,634 issued July 6, 2021; which is a continuation of U.S. Patent Application Ser. No. 15/337,813 filed October 28, 2016, now U.S. Patent No. 10,426,275 issued October 9, 2019; which claims the benefit of priority to U.S. Provisional Patent Application No. 62/248,745 filed October 30, 2015. The disclosures of which are incorporated herein by reference in their entirety.

TECHNICAL FIELD

[0002] The present disclosure relates to child carriers. Even more particularly, the present disclosure relates to a child carrier that is adaptable to ergonomically carry a child as the child grows.

BACKGROUND

[0003] Various child carriers are currently available for transporting a child by a parent or other individual. Child carriers have become popular for carrying infants and toddlers because they afford the wearer freedom of hand and arm movement while carrying a child. In pursuit of child safety, some of these devices have become overly complex involving, among other things, rigid seats and frames which considerably increase the weight of the carrier and cannot accommodate for the growth of the child. These complex carriers are relatively heavy and place an undue strain upon the wearer, particularly in the lumbar region. In addition, because of the size of many of the present day carriers, they can only be worn on the back thus denying the child the comfort and security of a position where a child and its mother may be in a face-to-face relationship.

[0004] Soft structured carriers have become increasingly popular because they are lighter, less cumbersome and more comfortable to wear. These carriers incorporate padding, stitching and fabrics, rather than a rigid frame, to provide the structure. However, some soft-structured carriers hold a child in an upright position with the child's legs hanging down and the

BabyBjőrn AB, Exhibit 1002
BabyBjőrn AB v. The Ergo Baby Carrier, Inc.
IPR2025-00111, Page 12 of 112

base of the child's spine supporting the child's bodyweight. This position may not be optimal for infant and other young children. While an adult spine has four curves, a young child's spine only has two curves. A majority of a young child's spine will form a C-shape (so-called total kyphosis). Positioning a young child, particularly an infant, in an upright position may unduly limit curvature of the spine and puts stress on the infant's sacrum. This can cause the infant's pelvis to tilt backward limiting leg and hip movement, which may impede healthy development of the infant's pelvis.

[0005] Moreover, conventional soft structured carriers are usually designed for a very limited age, weight and size of child and make compromises regarding the shape of the carrier to accommodate a range of ages. Even if a carrier supports ergonomic positioning of the child at one age/weight/size, positioning a child in an ergonomic position through the range of ages while utilizing the same carrier poses a problem as different children develop at different rates and the anatomy and physiology of children changes dramatically between infancy and toddlerhood.

[0006] A carrier designed for infants or younger babies may not accommodate a child as the child grows into toddlerhood because the seat and back support portions of the carrier will become too small. In an attempt to make carriers more adaptable, some carriers provide additional panels that can be unfolded and added to the seat to widen the seat and/or back panels that can expand (e.g., by unfolding additional back panel material or attaching new panels) to accommodate the child's growth. However, simply widening the seat or lengthening the carrier does not adequately address proper ergonomics.

[0007] On the other hand, a carrier designed for older children may not properly support an infant. One solution to this problem is the use of a specially designed "infant insert." In general, an infant insert is an accessory that incorporates additional padding and structure and makes it possible to carry a small infant in a carrier that would not otherwise properly support the infant. However, not all carriers support the use of infant inserts. Moreover, depending on design, infant inserts may be cumbersome, non-intuitive, and easily lost. In particular, the use of a separate infant insert may require that parents keep track of two separate devices and may significantly increase the difficulty of configuring the carrier for a wearer, the wearing of the carrier, or the ingress and egress of a child to the carrier.

[0008] Due to the foregoing issues, parents often opt for changing carriers as the child ages.

SUMMARY

BabyBjőrn AB, Exhibit 1002
BabyBjőrn AB v. The Ergo Baby Carrier, Inc.
IPR2025-00111, Page 13 of 112

[0009] Embodiments described herein provide a wearable child carrier that can be adapted to a baby's size and provide ergonomic positioning of the child throughout the range of the carrier adjustability.

[0010] According to one embodiment, a child carrier includes a waist belt adapted for securing about a wearer's hips and a main body coupled to the waist belt, where the main body adapted to form a child carrying area in cooperation with a wearer's torso. The main body can include a torso support portion configured for supporting at least the torso of a child; and an adjustable bucket seat configurable in a plurality of bucket seat configurations, each of the plurality of bucket seat configurations having a different bucket seat depth and bucket seat width and adapted to support a child in a corresponding size range in a spread squat position. In one embodiment, the plurality of bucket seat configurations comprises a configuration adapted to support an infant in a spread squat position without an infant insert. The plurality of bucket seat configurations may include a configuration adapted to support a toddler in a spread squat position.

[0011] The child carrier can include one or more adjustment areas adapted to adjust the bucket seat depth and the bucket seat width. In one embodiment, the child carrier has a minimum wearable height that is dependent on the bucket seat depth.

[0012] In accordance with one aspect, the plurality of bucket seat configurations comprises a first configuration adapted to support a child in a first size range in a first spread squat position; and a second configuration adapted to support a child in a second size range in a second spread squat position. The first configuration may have a first bucket seat width and first bucket seat depth and the second configuration may have a second bucket seat width and a second bucket seat depth, wherein the first bucket seat width is less than the second bucket seat width and the first bucket seat depth is greater than the second seat bucket depth.

[0013] In one embodiment, the main body further comprises a seat center portion coupled to the waist belt and torso support portion and thigh supports disposed on either side of the seat center portion. The thigh supports can be adapted to pass under and support a child's thighs and cooperate with the seat center portion to form the bucket seat. The carrier can further include a base width adjuster coupled to each thigh support. The base width adjusters can be configured for selective coupling to the waist belt in multiple locations to adjust a width of the main body at the waist belt. The base width adjusters can also be configured for selective coupling to the waist belt in multiple locations to adjust the bucket seat depth.

BabyBjőrn AB, Exhibit 1002
BabyBjőrn AB v. The Ergo Baby Carrier, Inc.
IPR2025-00111, Page 14 of 112

[0014] The child carrier may include one or more fabric shaping members adapted to control a bulge of the bucket seat. As one example, the fabric shaping members may comprise darts disposed between the thigh supports and the seat center portion, where the darts are adapted to open or close responsive to adjustment of the base width adjusters. The base width adjusters may be configurable in a first setting corresponding to a maximum bucket seat depth and a second setting corresponding to a minimum bucket seat depth, wherein the darts or other fabric shaping members have a first shape corresponding to the first setting and a second shape corresponding to the second setting.

[0015] In accordance with one embodiment, the seat center portion comprises laterally outer edges and the thigh supports comprise laterally inner edges. The fabric shaping members may be disposed between the laterally outer edges and the laterally inner edges. The base width adjusters can be adjustable through rotation to rotate the laterally inner edges relative to the laterally outer edges to open or close the fabric shaping members. Furthermore, adjusting the base width adjusters can increase or decrease the bucket depth/shape.

[0016] The carrier may further include thigh width adjusters comprising thigh width adapters coupled to the thigh supports where the thigh width adapters can adjust the width of the bucket seat.

[0017] The carrier may also include a neck support configurable in an inside folded down position in which the neck support is positioned in the child carrying area to support a child's neck. The neck support may also be configured in an extended position to provide additional carrier length and support for a larger child, or additional neck support and coverage for a sleeping baby. The neck support may also be configurable in an outside folded down position.

[0018] According to one embodiment, a method of configuring a child carrier can comprise: for a child to be carried, adjusting a bucket seat of the child carrier to a child's size and positioning the child in a child carrying area of the child carrier such that the child is supported in an ergonomic spread squat position. Adjusting the bucket seat to the child's size can include configuring a depth of the bucket seat by coupling base width adjusters of the child carrier to a waist belt of the child carrier at positions for a base width setting corresponding to the child's size and adjusting thigh width adapters to adjust a width of the bucket seat. Configuring the depth the bucket seat may further comprise rotating the base width adjusters to open or close darts. The

BabyBjőrn AB, Exhibit 1002
BabyBjőrn AB v. The Ergo Baby Carrier, Inc.
IPR2025-00111, Page 15 of 112

method may further include configuring an adjustable neck support to fill a portion of the child carrying area and support a child's neck.

[0019] Embodiments described herein provide an advantage over prior carriers because the ergonomic bucket seat gradually adjusts to a growing baby from newborn to toddler, to ensure baby is seated in an ergonomic spread-squat, natural "M shape" position at multiple stages.

[0020] As an additional advantage, embodiments described herein can provide an adjustable seat shape that does not require adding to or removing structure from the carrier to change the seat shape. For example, some embodiments can accommodate infants and larger children without requiring an infant insert for an infant.

[0021] Embodiments described herein can provide another advantage by allowing for easy adjustment of the carrier seat shape without adding or removing panels from the seat.

[0022] Embodiments described herein can provide another advantage by providing a carrier with a wearable length that can be adjusted without requiring complicated mechanisms to extend the overall length of the carrier.

BRIEF DESCRIPTION OF THE DRAWINGS

[0023] For a better understanding of these and other objects of the invention, reference will be made to the following detailed description of the invention which is to be read in association with the accompanying drawings, wherein:

[0024] FIG. 1 is a diagrammatic representation of an adult wearer carrying a child in an adjustable carrier;

[0025] FIG. 2A is a diagrammatic representation of an inside view of one embodiment of an adjustable baby carrier;

[0026] FIG. 2B is a diagrammatic representation of an outside view of one embodiment of adjustable carrier;

[0027] FIG. 3A is a diagrammatic representation of one embodiment of a base width adjuster in a first base width adjuster configuration;

[0028] FIG. 3B is a diagrammatic representation of one embodiment of a base width adjuster in a second base width adjuster configuration;

[0029] FIG. 3C is a diagrammatic representation of one embodiment of a base width adjuster in a third base width adjuster configuration;

BabyBjőrn AB, Exhibit 1002
BabyBjőrn AB v. The Ergo Baby Carrier, Inc.
IPR2025-00111, Page 16 of 112

[0030] FIG. 4A is a diagrammatic representation of one embodiment of a carrier with thigh width adjusters in a first thigh width adjuster configuration;

[0031] FIG. 4B is a diagrammatic representation of one embodiment of a carrier with thigh width adjusters in a second thigh width adjuster configuration;

[0032] FIG. 4C is a diagrammatic representation of one embodiment of a carrier with thigh width adjusters in a third thigh width adjuster configuration;

[0033] FIG. 5A is a diagrammatic representation of another view one embodiment of a carrier with thigh width adjusters in the first thigh width adjuster configuration;

[0034] FIG. 5B is a diagrammatic representation of another view of one embodiment of a carrier with thigh width adjusters in the third thigh width adjuster configuration;

[0035] FIG. 6A is a diagrammatic representation of one embodiment of a carrier with bucket seat in a first seat configuration;

[0036] FIG. 6B is a diagrammatic representation of one embodiment of a carrier with bucket seat in a second seat configuration;

[0037] FIG. 6C is a diagrammatic representation of one embodiment of a carrier with bucket seat in a third seat configuration;

[0038] FIG. 7A is a diagrammatic representation of one embodiment of a carrier with a neck support in a first neck support configuration;

[0039] FIG. 7B is a diagrammatic representation of one embodiment of a carrier with a neck support in a second neck support configuration;

[0040] FIG. 7C is a diagrammatic representation of one embodiment of a carrier with a neck support in a third neck support configuration;

[0041] FIG. 8 is a diagrammatic representation of one embodiment of a wearer wearing a carrier in a back carry position;

[0042] FIG. 9 is a diagrammatic representation of one embodiment of a wearer wearing a carrier in a side carry configuration.

DETAILED DESCRIPTION

[0043] Child carriers and related methods and the various features and advantageous details thereof are explained more fully with reference to the nonlimiting embodiments that are illustrated in the accompanying drawings and detailed in the following description. Descriptions of well-known starting materials, processing techniques, components and equipment are omitted

BabyBjőrn AB, Exhibit 1002
BabyBjőrn AB v. The Ergo Baby Carrier, Inc.
IPR2025-00111, Page 17 of 112

so as not to unnecessarily obscure the invention in detail. It should be understood, however, that the detailed description and the specific examples, while indicating preferred embodiments of the invention, are given by way of illustration only and not by way of limitation. Various substitutions, modifications, additions and/or rearrangements within the spirit and/or scope of the underlying inventive concept will become apparent to those skilled in the art from this disclosure.

[0044] The present disclosure relates to child carriers that allow a child, including an infant, to be carried in a manner that supports the child and maintains the child's pelvis and thighs in a preferred ergonomic position through a range of ages. In particular, embodiments described herein provide carriers that support the child's bottom, pelvis and thighs in a desired position. Embodiments described herein also allow a child to be carried on the front or back or to the side of the person carrying the child. The carrier can be worn by a user in front of, in back of or to the side of the wearer with the child's weight carried near the wearer's center of gravity and close to the wearer's front, back or side in a front, back or side position, respectively.

[0045] The adjustable child carrier can be configured to accommodate children of a wide range of sizes in a front, rear or side carrying position while supporting the child's hips, pelvis, bottom and both upper thighs when the child is being carried in various orientations. For example, embodiments of a child carrier as disclosed herein may provide an adjustable child carrier usable with a newborn children (infant) (e.g., around 7 pounds) and additionally with children all the way to up to around 45 pounds or more.

[0046] In accordance with one aspect of the present disclosure, a carrier includes a bucket seat for a child and one or more adjustment areas that when adjusted serve to adjust a depth of the seat bucket and a height of the child carrier. When adjusted to a newborn setting, the carrier is configured such that the depth of the seat bucket may be at a maximum. Conversely, when adjusted to its maximum, or largest size, setting (e.g., a setting for the largest child the carrier is designed to accommodate) the depth of the seat bucket may be at a minimum. When the depth of the bucket seat is at a maximum the thighs may be supported such that the angle of the thighs of the child relative to the coronal plane may be greatest and when the depth of the bucket seat is at a minimum the thighs may be supported such that the angle of the thighs of the child relative to the coronal plane may be the smallest. Similarly, then, the bucket seat is at a maximum, the carrier may be configured such that the carrier maintains a child carried therein with relatively more curve in their spine than when the bucket seat is at a minimum depth.

BabyBjőrn AB, Exhibit 1002
BabyBjőrn AB v. The Ergo Baby Carrier, Inc.
IPR2025-00111, Page 18 of 112

[0047] A child carrier may include one or more adjustment points that work alone or in cooperation to adjust the shape of the bucket seat area provided by the child carrier. These adjustment points may include base width adjusters adapted to adjust the width of the main panel of the baby carrier at a point where the main panel is coupled to the waistband of the carrier. The adjustment of the width of the base of the main panel may serve to provide maximum shape for the bucket area and thus maximum depth of the bucket seat area when adjusted to the narrowest setting for newborn babies and the minimal depth of the bucket seat area for the largest children when adjusted to the widest setting.

[0048] Another adjustment point provided by embodiments may be thigh width adjusters. These thigh width adjusters are configured to adjust the width of the main panel of the baby carrier at a point in the main panel configured to accommodate the thighs of a child. The thigh width of the main panel may be smallest at the tightest or smallest setting of the thigh width adjusters for newborn babies and widest at its largest or loosest setting (which may be fully released or not engaged) for the largest children (e.g., that the carrier is designed to accommodate).

[0049] These adjustment points may also work in cooperation to adjust the baby carrier. For example, the thigh width adjusters may also serve as more granular adjustment for the bucket area within the range of gross adjustment provided by the base width adjuster.

[0050] The carrier of certain embodiments may also be configured to adjust in height. In certain embodiments, the length of the physical carrier from the top edge of the waist belt at the center to the top edge of carrier at the center remains consistent, however, the wearable height changes depending on the setting of the bucket seat size. With the base width at its smallest/narrowest setting the bucket seat is deeper consuming more of the carrier length measurement, thus leaving less measurement for the wearable height while with the base width at is largest/widest setting the bucket seat is shallow consuming less of the carrier length measurement, thus leaving more measurement for the wearable height.

[0051] Embodiments of such carriers may also include an adjustable neck support. Such a neck support or collar that may be positioned according to the direction the child is facing, the size of the child, or other criteria. The adjustable neck support may be rotatable relative to the main panel such that the neck support may be extended increasing the center height of the carrier giving additional back or neck support for a child (depending on the size of the child). The neck support may also be folded back away from the wearer to reduce the height of the carrier (e.g., for

BabyBjőrn AB, Exhibit 1002
BabyBjőrn AB v. The Ergo Baby Carrier, Inc.
IPR2025-00111, Page 19 of 112

non-infant children). The neck support may also be folded down into the carrier toward the wearer such that it may reside inside the child carrying area to give an infant or other child additional head or neck support.

[0052] Embodiments as disclosed herein may therefore provide an adjustable child carrier configured to accommodate children of a wide range of sizes in a front, rear or side carrying position. Embodiments may thus be sized appropriately to carry an infant without the use of an additional infant insert. Configured according to such a setting, the carrier may be adapted for placement of a child in a child carrying area of the child carrier with the infant's knees raised. In one embodiment, when adjusted to accommodate an infant the carrier is adapted to support the infant in a position with the infant's femur at an angle of 90-120 degrees from the coronal plane. Additionally, the carrier can be adapted to support the infant in a position with the infant's knees at 45-60 degrees from the median plane. In particular embodiments, the carrier can be adapted to promote a spread-squat-position.

[0053] The carrier can be ergonomic for the wearer as well. A padded waist belt may provide lumbar support and may cooperate with shoulder straps (that may attach to the same or opposite sides of the carrier) that can form a configurable harness that can position the carrier in a front, side or back carry position while distributing the weight evenly to the wearer. The carrier may be adjusted such that the child is positioned close to the wearer's center of gravity which distributes the child's weight evenly. In some embodiments, the harness may be adjusted so that a majority of the child's weight is transferred to the wearer's hips.

[0054] FIG. 1 is a diagrammatic representation of an adult wearer carrying a child in an adjustable carrier **100** . Adjustable carrier comprises a main body **110** coupled to a waist belt **115** . Main body **110** includes a torso support portion **130** and a bucket seat **125** . The torso support portion **130** is configured for supporting the upper body of the child while in the carrier **100** . The seat **125** is configured for supporting the legs, hips and posterior of the child in an ergonomic position. As discussed in more detail below, embodiments of adjustable carrier **100** can include various adjustments such that carrier **100** can be adjusted as the child grows to support the child in an ergonomic spread squat position appropriate for the weight or size of the child with the child's pelvis, bottom and thighs all being supported. In an ergonomic spread squat position (also known as the “frog leg”, “frog”, “squat spread” or “M” position) (indicated by line **101**) the flexion at the hip joint is at least 90° and in some cases is 110° to 120° from the coronal plane, and the spreading

BabyBjőrn AB, Exhibit 1002
BabyBjőrn AB v. The Ergo Baby Carrier, Inc.
IPR2025-00111, Page 20 of 112

angle can average at approximately 45-55° from the median plane. As carrier **100** is adjustable, the angle of the hips and spread can depend on the settings of the carrier **100** and developmental stage of the child.

[0055] In one embodiment, the carrier can be adapted to support the child in a position with the child's femur approximately 90° to 120° (or other elevated position) from the coronal plane and to position the child's knees with an amount of spreading. The amount of spreading may depend on the developmental stage of the child and orientation with a newborn having less than 30°, then approximately 30°, then approximately 35°-40° and so on so, such that the final spread is approximately 40°-45°, though other amounts of spreading may be achieved including (e.g., for example approximately 55°). In one embodiment, the spreading may be at least 20° degrees from the median plane. The child's weight can be distributed across the child's bottom, thighs and back so that the sacrum does not bear too much weight and the child can rest with a more naturally curved "C" spine in a spread squat position that is believed to be better for pelvic development. It can be noted, however, that the child can be positioned in any comfortable position, preferably emphasizing a supportive posture rather than a posture where the child is primarily sitting on his or her sacrum.

[0056] FIG. 2A is a diagrammatic representation of an inside view of one embodiment of an adjustable baby carrier **100** and FIG. 2B is a diagrammatic representation of an outside view of one embodiment of adjustable carrier **100** (FIGS. 2A and 2B are referred to collectively herein as FIG. 2). Carrier **100** comprises a main body **110** coupled to a waist belt **115** . Main body **110** includes an upper torso support portion **130** , a seat portion **120** and thigh support areas **140** . Carrier **100** may also include shoulder straps **190** and a chest strap **195** . A child can be supported in a child carrying area created by the main body **110** in cooperation with the wearer's torso. Torso support portion **130** is configured to support upper body of the child while in the carrier while seat portion **120** cooperates with adjustable thigh support areas **140** to form an adjustable bucket seat **125** (FIG. 1) adapted to ergonomically position the child's legs and hips. Waist belt **115** and shoulder straps **190** provide a harness that distributes the child's weight to the wearer. Chest strap **195** can be used to secure left and right shoulder straps together.

[0057] Bucket seat portion **120** and thigh support areas **140** are adapted to pass from the outer side of the child carrying area (the side away from the wearer's torso) to inner side to form supportive and adjustable bucket seat **125** . Inner end portions of thigh support areas **140** can

BabyBjőrn AB, Exhibit 1002
BabyBjőrn AB v. The Ergo Baby Carrier, Inc.
IPR2025-00111, Page 21 of 112

be selectively coupled to waist belt **115** by base width adjusters **150** that are configurable for adjusting the width and depth of the bucket seat **125** . Thigh width adjusters **160** can also be provided to provide additional width adjustment. Thus, the bucket seat **120** can be adjusted to accommodate a range of ages/sizes/weights.

[0058] The supportive and adjustable bucket seat **125** can have a generally concave (e.g., "C" shape) inner profile from the inward side to the outward side and from right to left. Seat side edges **142** , **144** (formed by the edges of thigh support areas **140**) can be higher than the center of the seat and can be spaced such that the side edges pass under and around the child's thighs at a distance from the child's hips such that the child's legs (e.g., above the knee) do not dangle down. In some embodiments, thigh support areas **140** may provide additional support. In particular, in certain embodiments the thigh support areas **140** may include gathers, elastic material or another type of biasing material.

[0059] Bucket seat portion **120** comprises a seat center portion **122** that is coupled to waist belt **115** or other portion of carrier **100** at one end and to upper torso support portion **130** at the other end. Seat center portion **122** may be formed from a single piece of material, or may be formed from multiple pieces of material, multiple layers of materials, or multiple materials. The junction between upper torso support portion **130** and seat center portion **122** may be a substantially seamless transition. For example, in one embodiment, a center panel **123** may form seat center portion **122** and an upper torso center panel such that seat center portion **122** and the upper torso center panel comprise a unitary construction of one or more layers of material. In other embodiments, the junction may include seams, edges or other features delineating between upper torso support portion **130** and seat center portion **122** .

[0060] Thigh support areas **140** are disposed to the left and right of seat center portion **122** . Thigh support areas **140** may be selectively coupled to waist belt **115** by base width adjusters **150** such that thigh support areas **140** pass under and around the child's thighs at a distance from the child's hips where the portion of the thigh support areas **140** that pass under and around the child's thighs is higher than the child's bottom so that the child's knees are lifted. The thigh support areas **140** can have sufficient stiffness such that the child's thighs may be encouraged to spread by the thigh support areas **140** or wearer's torso. In one embodiment, thigh support areas **140** provide areas of thigh padding **141** to support the child's thighs.

BabyBjőrn AB, Exhibit 1002
BabyBjőrn AB v. The Ergo Baby Carrier, Inc.
IPR2025-00111, Page 22 of 112

[0061] Base width adjusters **150** may be coupled to respective thigh support areas **140** . In one embodiment, base width adjusters **150** may comprise flaps or tabs coupled to thigh support areas **140** . In the illustrated embodiment, base width adjusters **150** are coupled to a respective thigh support areas **140** by virtue of being part of the same thigh support straps. However, other configurations may also be used. In any event, base width adjusters **150** can be selectively coupled to waist belt **115** to couple thigh support areas **140** of main body **110** to waist belt **115** .

[0062] Base width adjusters **150** can be used to adjust the width of the base of main body **110** where it connects to waist belt **115** . A fastening mechanism **151** of base width adjusters **150** , such as a hook and loop material, buttons, snaps, zipper, etc., can cooperate with a corresponding fastening mechanism **117** on waist belt **115** to couple thigh support areas **140** to waist belt **115** . The fastening mechanisms **117** , **151** are configured such that the base width adjusters **150** may be coupled to the waist belt **115** in multiple positions or throughout a range of positions.

[0063] The width of bucket seat **125** proximate to waist belt **115** can be adjusted by changing the position at which base width adjusters **150** are secured to waist belt **115** . For example, moving the bottom ends of base width adjusters **150** laterally inboard (rotating base width adjusters **150** inward) decreases the width of main body **110** at the point main body **110** meets waist band **115** and may serve to decrease the width of the bucket seat where thigh support areas **140** pass under the child's thighs. Moving the ends of base width adjusters **150** more laterally outboard (rotating base width adjusters **150** laterally outward) increases the width of the main body **110** where it is coupled to the waist belt **115** and may increase the bucket seat width where the thigh support areas **140** pass under the child's thighs.

[0064] Base width adjusters **150** can be used to control the depth of the bucket seat **125** . In a minimum (or narrowest) base width setting the base width adjusters **150** may be fastened to the waist belt **115** such that they are maximally proximate one another toward the center axis of the waist belt **115** (given the range or number of positions possible). In this minimum base width setting carrier **100** is configured such that the depth of the seat bucket **125** may be at a maximum. In a maximum (or widest) base width setting, the base width adjusters **150** may be fastened to the waist belt **115** such that they are maximally distal one another away from the center axis of the waist belt **115** (given the range or number of positions possible). In this maximum (or widest) base

BabyBjőrn AB, Exhibit 1002
BabyBjőrn AB v. The Ergo Baby Carrier, Inc.
IPR2025-00111, Page 23 of 112

width setting, carrier **100** is configured such that the depth of the bucket seat **125** may be at a minimum.

[0065] Bucket seat portion **120** may include one or more shaping members to facilitate shaping the bucket seat. In one embodiment, bucket seat portion **120** includes gusset portions **170** that span the gap between the respective inner edges **146** , **148** of thigh support areas **140** and the laterally outer edges **126** , **128** of seat center portion **122** . Gusset portions **170** may be fastened to seat center portion **122** at or proximate to laterally outer edges **126** , **128** and to thigh support areas at or proximate to laterally inner edges **146** , **148** to form a first dart having a dart apex **174** generally pointing toward the bottom of the bucket seat **125** and dart legs defined by the connections at or proximate to edges **126** , **146** and a second dart having a dart apex **175** and dart legs defined by the connections at or proximate to edges **128** , **148** . The dart legs can be closed or opened to gather or release the darts. In particular, by adjusting base width adjusters **150** to decrease the angle between seat center portion **122** and thigh support areas **140** , the dart legs can be closed and darts deepened. Consequently, bucket seat **125** can bulge further and take on a deeper curve. Conversely, adjusting base width adjusters **150** to increase the angle between seat center portion **122** and thigh support areas **140** opens the dart legs and makes the darts formed by gusset portions **170** shallower. Consequently, the bucket seat **125** formed by carrier **100** will be shallower. While, in the above embodiment, the shaping members are darts, other shaping mechanisms can be used to control the fullness of bucket seat **125** including, but not limited to pleats, gathers or tucks.

[0066] Referring briefly to FIGS. 3A, 3B and 3C (collectively FIG. 3), FIG. 3 illustrates the operation of one embodiment of base width adjusters **150** . In FIG. 3, the base width adjusters **150** can be secured to waist belt **115** to either side of the lateral centerline of main body **110** to adjust the width of carrier **100** at thigh support areas **140** . In the embodiment illustrated, hook and loop material is used to secure the base width adjusters **150** to waist belt **115** on the side of waist belt **115** sandwiched between waist belt **115** and the wearer. This can increase the hold of the hook and loop material when in use because of the pressure against the base width adjusters **150** .

[0067] In the embodiment of FIG. 3, each base width adjuster **150** is secured to waist belt **115** in one of three positions **154** , **156** , **158** . These positions may correspond to particular size ranges of children. In FIG. 3A, base width adjusters **150** are secured at positions **154**

BabyBjőrn AB, Exhibit 1002
BabyBjőrn AB v. The Ergo Baby Carrier, Inc.
IPR2025-00111, Page 24 of 112

corresponding to a minimum (or narrowest) base width setting. In FIG. 3B, base width adjusters **150** are secured at positions **156** corresponding to a moderate base width setting. In FIG. 3C, base width adjusters **150** are secured at positions **158** corresponding to a maximum (or widest) base width setting.

[0068] It can be noted that base width adjusters **150** as illustrated essentially rotate from a pivot point as they are adjusted. Thus, not only does the lateral position of the attachment position change, the vertical position does as well (e.g., positions **154** , **156** and **158** for a base width adjuster **150** are both laterally and vertically displaced from each other). The use of a rotational motion like this provides a greater change in bucket depth for a given lateral change. Other embodiments, however, could use a more linear motion (e.g., in which the attachment positions are horizontally aligned). Furthermore, positions **154** , **156** and **158** are provided by way of example. In the embodiment illustrated, base width adjusters **150** can be coupled to fastening mechanism **117** in a continuous range of positions. Other embodiments may provide discrete attachment points.

[0069] Referring to FIG. 3A, base width adjusters **150** are fastened to the waist belt **115** such that they are maximally proximate one another toward the center axis of the waist belt **115** (given the range or number of positions possible). However, because laterally inner edges **146** , **148** of thigh support areas **140** are drawn close to laterally outer edges **126** , **128** (hidden by gusset portion **170**) of seat center support part **122** , gusset portions **170** form deeply curved darts. Put another way, by fastening base width adjusters **150** to waist belt **115** such that they are maximally proximate one another, the laterally outer edges of gusset portions **170** may be drawn toward the laterally inner edges of gusset portions **170** , creating a corresponding greater curve or dart shapes in gusset portions **170** . This serves to shape bucket seat portion **120** to increase the depth of the bucket seat portion.

[0070] Referring to FIG. 3C, the base width adjusters **150** are secured at positions **158** corresponding to a maximum (or widest) base width setting. In this configuration, the laterally inner edges **146** , **148** are rotated away from the respective laterally outer edges **126** , **148** of FIG. 3C. In other words, the dart legs are opened to release the darts and create less shape (curve) at the end of the gusset portions **170** . By fastening base width adjusters **150** to waist belt **115** such that they are maximally distal one another (again, given the range of possible setting for coupling base width adjusters **150** to waist belt **115**), tension may be maintained on outer edges of gusset portions

BabyBjőrn AB, Exhibit 1002
BabyBjőrn AB v. The Ergo Baby Carrier, Inc.
IPR2025-00111, Page 25 of 112

170 such that gusset portions **170** remain relatively flat. As such, bucket seat portion **120** may be maintained in a relatively flat or less shaped configuration, serving to minimize the depth of the bucket seat **125** .

[0071] Base width adjusters **150** primarily adjust the width of the seat proximate to waist belt **115** . However, moving away from waist belt **115** , the seat (edges **142** , **144**) may flare out. With reference to FIG. 2, thigh width adjusters **160** may be provided to adjust the width of the seat away from waist belt **115** . In particular, thigh width adjusters **160** may be adapted to adjust the width of the bucket seat where edges **142** , **144** of thigh supports **140** pass under the child's thighs. Thigh width adjusters **160** can be used to pull in thigh support areas **140** so that thigh support areas **140** do not extend past the child's knee and thus prevent thigh support areas **140** from straightening the child's legs or overspreading the child's legs.

[0072] In certain embodiments, thigh width adjusters **160** may be coupled to respective thigh support areas **140** and are configured to adjust the width of the carrier at the level of thigh support areas **140** . In accordance with one embodiment, each thigh width adjuster **160** may be a piece of material(s) (webbing or other material) that is coupled at a first end **162** to the respective thigh support area **140** proximate to support portions **141** and includes a second end that can be selectively coupled to main body **110** (e.g., to seat center portion **122** or elsewhere). The thigh width adjusters **160** can act as a drawstring system, one on each side, to adjust the width of carrier **100** at thigh level by pulling the thigh support areas **140** laterally inward and thereby further adjusting the width of carrier **100** at the child's thighs.

[0073] Referring briefly to FIGS. 4A, 4B and 4C (collectively FIG. 4) and FIGS. 5A and 5B (collectively FIG. 5), the operation of one embodiment of thigh width adjusters **160** is illustrated. Thigh width adjusters **160** can be selectively coupled to bucket seat portion **120** to pull thigh support areas **140** laterally inward a desired amount. FIG. 4, for example, illustrates the thigh width adjuster **160** secured in three positions corresponding to a narrowest (tightest) setting (FIG. 4A, FIG. 5A), a moderate setting (FIG. 4B) and a widest (loosest) setting (FIG. 4C, FIG. 5B).

[0074] In the embodiment illustrated, each thigh width adjuster **160** includes a strip of material that is fastened at first end **162** to the outside of a respective thigh support area **140** proximate to the thigh padding **141** (e.g., near the respective outer edge **142** , **144**). The thigh width adjuster **160** runs laterally inboard through a fabric tunnel **172** to a distal portion **164** that includes a plurality of spaced thigh width adjuster fasteners **166** (e.g., snaps, buttons, hook and

BabyBjőrn AB, Exhibit 1002
BabyBjőrn AB v. The Ergo Baby Carrier, Inc.
IPR2025-00111, Page 26 of 112

loop, etc.) that can be selectively fastened to a corresponding fastener on bucket seat portion **120** of main body **110** .

[0075] In FIG. 4A, the thigh width adjuster fastener **166** that is closest to the respective thigh support area **140** is fastened to the corresponding fastener on the bucket seat portion **120** . This position corresponds to a narrowest thigh width adjuster setting and, as illustrated in FIG. 5A, thigh support area **140** is gathered inward to decrease the width of carrier **100** at the child's thighs. Conversely, fastening the fastener **166** that is farthest from the respective thigh support area **140** to bucket seat portion **120** , as shown in FIG. 4C, may achieve the widest setting of the thigh width adjusters **160** . When the thigh width adjusters **160** are in the widest setting position of FIG. 4C, the outer edges of the thigh support areas **140** can spread out as illustrated in FIG. 5B, thus widening carrier **100** at the child's thighs.

[0076] As can be understood from the foregoing, the base width adjusters **150** and the thigh width adjusters **160** may work in cooperation to adjust the carrier **100** . In accordance with one embodiment, base width adjusters **150** can be used for adjustment of seat depth and provide a gross adjustment of seat width, while thigh width adjusters **160** may serve as granular adjustments for width within the range of gross adjustment provided by the base width adjusters **150** . For example, at a particular setting of the base width adjusters **150** of the carrier **100** , the width of the carrier **100** at thigh support areas **140** may be narrowest with the thigh width adjusters **160** at their smallest or narrowest (tightest) setting and largest with the thigh width adjusters **160** at their widest (loosest) setting.

[0077] Carrier **100** may also adjust in height based on other settings of carrier **100** . In particular, adjusting base width adjusters **150** adjusts the wearable back height (length from bottom of bucket seat **125** to top edge **132**). This occurs because the length of the physical carrier material from the top edge **116** of the waist belt **115** at center to the top edge **132** of main body **110** at center remains consistent such that the wearable back height changes depending on the setting of the bucket seat size. A deeper bucket consumes more length of material between edges **116** and **132** , thus leaving less measurement for the wearable height On the other hand, a shallower bucket consumes less length of material between edges **116** and **132** , thus leaving more measurement for the wearable height.

[0078] Thus, adjusted to a smallest child mode (e.g., an infant mode) (base width at its smallest/narrowest setting) the bucket seat **125** may be deeper consuming more of the carrier

BabyBjőrn AB, Exhibit 1002
BabyBjőrn AB v. The Ergo Baby Carrier, Inc.
IPR2025-00111, Page 27 of 112

length measurement, thus leaving less measurement for the wearable height (length from bottom of bucket seat **125** to top edge of carrier center panel **123** at center is at its shortest height). Adjusted to a largest child mode (e.g., a toddler mode) (base width at its largest/widest setting) the bucket seat **125** is shallow consuming less of the carrier length measurement, thus leaving more measurement for the wearable height (length from bottom of bucket seat **125** to top edge of carrier center panel **123** at center at its longest height). The carrier thus adjusts to the height of the child based on adjustment to the bucket seat.

[0079] Carrier **100** may be adjusted to provide ergonomic support for the child regardless of the size of the child through a supported range. In accordance with one embodiment, carrier **100** can be set for an infant with base width adjusters **150** and thigh width adjusters **160** set at their narrowest settings. In this configuration, the bucket seat will be at its deepest with higher walls at the thigh support areas **140** lifting the child's thighs and knees to a greater angle and into a spread squat position appropriate for that size child. Similarly, carrier **100** can be set for the largest child with the base width adjusters **150** and the thigh width adjusters **160** at their widest settings. In this configuration, the bucket seat may be at its shallowest depth with lower walls at the thigh support areas **140** lifting the child's thighs and knees to a lesser angle and into a spread squat position appropriate for a larger sized child.

[0080] Thus, the adjustable bucket seat is configurable in a plurality of configurations having different seat bucket depths and seat bucket widths. The different configurations can be adapted to support a child in a corresponding size range in a spread squat position. For example, in one embodiment, bucket seat can have a first configuration adapted to ergonomically carry a child of 20-24 inches (generally corresponding to an infant of 0-3 months and over 7 pounds) in a spread squat position appropriate for the infant without requiring an infant insert. Furthermore, the carrier can have a second configuration adapted to ergonomically carry a child of 24-28 inches (generally corresponding to an older baby of 3-9 months) in a spread squat position appropriate for that child's size. In addition, the carrier, in this example, can have a third configuration adapted to ergonomically carry a child of 28 inches or greater (generally corresponding to an older baby or toddler of 9-48 months (up to the carrying capacity of the carrier or the wearer)). The first configuration can correspond to the base width being at the narrowest setting (deepest bucket seat) (an infant mode), the second configuration can correspond to the base width being at a moderate setting and the third configuration can correspond to the base width being at a widest setting

BabyBjőrn AB, Exhibit 1002
BabyBjőrn AB v. The Ergo Baby Carrier, Inc.
IPR2025-00111, Page 28 of 112

(shallowest bucket seat) (a toddler mode). It can be noted that the ranges provided above are provided by way of example and not limitation. Furthermore, the seat may have other configurations.

[0081] The user can thus adjust the bucket seat **125** to support the child in an ergonomic spread squat position appropriate for the weight or size of the child with the child's pelvis, bottom and thighs all being supported. The child's weight can be supported so that the child is squatting in the seat rather than sitting with the child's weight primarily on the sacrum. The child can be supported with the knees higher than the bottom, in some cases higher than 90 degrees. The bucket seat **125** can be adjusted to form a sling or pouch that is wider than the child's hips in which the child's bottom is supported. The thigh support areas **140** can be adjusted pass under and around the child's thighs at a distance from the child's hips such that the portions of thigh support areas **140** that pass under and around the child's thighs are higher than the child's bottom to lift the child's knees. The thigh support areas **140** can have sufficient stiffness to encourage the child's thighs to spread by the thigh support straps or wearer's torso.

[0082] FIGS. 6A, 6B and 6C (collectively FIG. 6) are diagrammatic representations of one embodiment of carrier **100** adjusted to accommodate various sized children. FIG. 6A corresponds to the minimum base width setting of FIG. 3A, FIG. 6B corresponds to a moderate base width setting of FIG. 3B and FIG. 6C corresponds to the maximum base width setting of FIG. 3C. Through adjustment of base width adjusters **150** and thigh width adjusters **160** , the width of bucket seat **125** and the depth of bucket seat **125** (indicated by depth **202**) can be configured. Furthermore, because the length of material of carrier **100** available to support the back depends on the depth of bucket seat **125** , adjusting base width adjusters **150** also adjusts the minimum wearable height **204** of carrier **100** . As illustrated in FIG. 6, the wearable height **204** of carrier **100** increases with decreasing bucket depth.

[0083] With all settings set for a small baby, the seat center portion **122** , gusset portions **170** and thigh support areas **140** cooperate to form a deep bucket seat **125** as illustrated in FIG. 6A. The deep bucket seat **125** with higher walls at the thigh (under the knee) tends to lift the child's knees (indicated by line **210**) to the appropriate spread squat position and promotes rounding of the back into a c-shape (indicated by line **212**). Moreover, a deeper bucket seat **125** shortens the wearable height **204** . Thus, the configuration of FIG. 6A may be suitable for infants. As the child grows, the child's spine should naturally straighten and the child will require less knee

BabyBjőrn AB, Exhibit 1002
BabyBjőrn AB v. The Ergo Baby Carrier, Inc.
IPR2025-00111, Page 29 of 112

support. Base width adjusters **150** and thigh width adjusters can be adjusted to widen bucket seat **125** and provide additional back support length to support the child's lengthening spine. As shown in FIG. 6B and FIG. 6C, for example, carrier **100** the bucket seat **125** may be adjusted to provide less knee lift, but enough to maintain an appropriate spread squat position (e.g., for an older baby in FIG. 6B and for a toddler in FIG. 6C) and allow the child to rest with a straighter back.

[0084] Returning to FIG. 2, carrier **100** may also include an adjustable neck support **180** . Adjustable neck support **180** may be extended to increase the center height of carrier **100** , giving additional back or neck support for a child (depending on the size of the child). The neck support **180** may also be folded back away from the wearer to reduce the height of the carrier (e.g., for non-infant children). The neck support **180** may also be folded down toward the wearer such that it may reside inside the child carrying area to give an infant or other child additional head or neck support. The size, shape and position of neck support **180** can be selected so that neck support **180** will fit behind and support the average infant's neck when neck support **180** is folded into the carrier.

[0085] Complementary extended position securing mechanisms and complementary non-extended position securing mechanisms such as, but not limited to, buttons, snaps, d-rings and clips or hooks, patches of hook and loop material or other securing mechanism, can be provided so that adjustable neck support **180** can be secured in an extended position or folded back and secured in a non-extended position.

[0086] FIGS. 7A, 7B and 7C illustrate one embodiment of adjustable neck support **180** in an inside folded down configuration, an extended configuration and an outside folded down configuration respectively. In the inside folded down position of FIG. 7A, adjustable neck support **180** can be adapted to partially fill the inside of the carrying area of carrier **100** to give infants with insufficient head control more head and neck support (see also FIG. 6A). Adjustable neck support **180** can also be configured in the outside folded down configuration of FIG. 7B to provide additional volume in the carrier as the child grows (see also FIGS. 6B and 6C). Neck support **180** can be configured in the extended mode (flipped up) as illustrated in FIG. 7C to increase the center back length, giving additional back support for toddlers or head and neck support for non-infant babies. Neck support **180** may be positioned according to the size of the child, or other criteria.

[0087] According to one embodiment, adjustable neck support **180** may be joined to main body **110** proximate to top edge **132** . The coupling may form a generally horizontal hinge

BabyBjőrn AB, Exhibit 1002
BabyBjőrn AB v. The Ergo Baby Carrier, Inc.
IPR2025-00111, Page 30 of 112

that allows adjustable neck support **180** to flip over edge **132** from the inside folded down configuration to the outside folded down configuration. In the embodiment illustrated, adjustable neck support **180** may be secured in the inside folded down configuration and outside folded down configuration using first set of neck support fasteners **182** and may be secured in the extended configuration using a second set of neck support fasteners **184** located above the first set of neck support fasteners **182** . Preferably, but not necessarily, the neck support fasteners are located on the outside of main body **110** .

[0088] With reference again to FIG. 2, shoulder straps **190** can be configured to form a loop and attach on either side of the lateral centerline of carrier **100** . In other embodiments, shoulder straps may be worn in an "x" configuration. Each shoulder strap **190** may connect to upper torso support portion **130** at one or more locations to pull upper torso support portion **130** toward the wearer. A shoulder strap may also couple to main body **110** of carrier **100** above thigh support areas **140** or other portion of carrier **100** on the same side, or an opposite side, of the centerline where the shoulder strap **190** is coupled to the upper torso support portion **130** . Shoulder straps **190** may be adjustable and, in some cases, can be re-configured to support multiple carrier positions, such as a front carry, side carry position (hip carry) or back carry position.

[0089] Waist belt **115** may have a lumbar support portion **119** and be configured to rest on the wearer's hips. Preferably, the harness is configured so that the child's weight is evenly distributed to the wearer's hips and shoulders and even more preferably such that the child's weight is distributed evenly to the wearer's hips and shoulders and in some cases primarily to the wearer's hips rather than shoulders. In some cases, 70 percent or more of the child's weight can be distributed to the wearer's hips through waist belt **115** , thereby promoting wearer comfort and diminishing wearer fatigue.

[0090] In accordance with one aspect of the present disclosure, carrier **100** can be a soft structured carrier that incorporates padding, stitching and fabrics to provide structure. Main body **110** , including upper torso support portion **130** , bucket seat portion **120** , thigh supports **140** and thigh width adjusters **150** can be flexible and can be formed primarily of natural or synthetic fibers without a rigid frame. As would be understood by a person of ordinary skill in the art, however, some components, such as buckles, fasteners, etc. of a soft structured carrier may be formed of hard plastics, metals and the like.

BabyBjőrn AB, Exhibit 1002
BabyBjőrn AB v. The Ergo Baby Carrier, Inc.
IPR2025-00111, Page 31 of 112

[0091] Carrier **100** may include one or more panels formed from a single piece of material or multiple pieces of material, multiple layers of materials, or multiple materials. For example, in some embodiments, upper torso support portion **130** may be formed with an inner layer selected for comfort against a child's skin and an outer layer selected for breathability, fashion, stain resistance, etc. Upper torso support portion **130** may have straight edges, tapered edges for an area of increased width or decreased width, or otherwise configured for comfort or security of a child or a user. Similarly, bucket seat portion **120** may include one or more panels formed from a single piece of material, or may be formed from multiple pieces of material, multiple layers of materials, or multiple materials. The junction between upper torso support portion **130** and bucket seat portion **120** may be a substantially seamless transition. In one embodiment, the center of upper torso support portion **130** and center of bucket seat portion **120** may be formed from a unitary center panel **123** (of one or more layers) attached to side panels that form the laterally outer portions of upper torso support portion **130** and thigh support areas **140** . Inner layers may be selected for comfort against a child's skin and outer layers selected for breathability, fashion, stain resistance, etc. In some embodiments, the center portion may be selected for comfort and lateral portions selected for breathability, security, etc.

[0092] It can be noted that carrier **100** may support a number of carrying positions. FIG. 1, for example, is a diagrammatic representation of one embodiment of an adult wearer carrying a child in an inward facing front carry position. FIG. 8 is a diagrammatic representation of one embodiment of an adult wearer carrying a child in carrier **100** in an inward facing back wearing configuration. FIG. 9 is a diagrammatic representation of one embodiment of an adult wearer carrying a child in carrier **100** in a side (hip) wearing configuration.

[0093] As used herein, the terms “comprises,” “comprising,” “includes,” “including,” “has,” “having” or any other variation thereof, are intended to cover a non-exclusive inclusion. For example, a process, article, or apparatus that comprises a list of elements is not necessarily limited to only those elements but may include other elements not expressly listed or inherent to such process, article, or apparatus. Further, unless expressly stated to the contrary, “or” refers to an inclusive or and not to an exclusive or. For example, a condition A or B is satisfied by any one of the following: A is true (or present) and B is false (or not present), A is false (or not present) and B is true (or present), and both A and B are true (or present). As used herein, a term preceded by “a” or “an” (and “the” when antecedent basis is “a” or “an”) includes both singular and plural of

BabyBjőrn AB, Exhibit 1002
BabyBjőrn AB v. The Ergo Baby Carrier, Inc.
IPR2025-00111, Page 32 of 112

such term, unless clearly indicated otherwise (i.e., that the reference "a" or "an" clearly indicates only the singular or only the plural). Also, as used in the description herein and throughout the meaning of "in" includes "in" and "on" unless the context clearly dictates otherwise.

[0094] Additionally, any examples or illustrations given herein are not to be regarded in any way as restrictions on, limits to, or express definitions of, any term or terms with which they are utilized. Instead, these examples or illustrations are to be regarded as being described with respect to one particular embodiment and as illustrative only. Those of ordinary skill in the art will appreciate that any term or terms with which these examples or illustrations are utilized will encompass other embodiments which may or may not be given therewith or elsewhere in the specification and all such embodiments are intended to be included within the scope of that term or terms. Language designating such nonlimiting examples and illustrations include, but is not limited to: "for example," "for instance," "e.g.," "in one embodiment."

[0095] Reference throughout this specification to "one embodiment", "an embodiment", or "a specific embodiment" or similar terminology means that a particular feature, structure, or characteristic described in connection with the embodiment is included in at least one embodiment and may not necessarily be present in all embodiments. Thus, respective appearances of the phrases "in one embodiment", "in an embodiment", or "in a specific embodiment" or similar terminology in various places throughout this specification are not necessarily referring to the same embodiment. Furthermore, the particular features, structures, or characteristics of any particular embodiment may be combined in any suitable manner with one or more other embodiments. It is to be understood that other variations and modifications of the embodiments described and illustrated herein are possible in light of the teachings herein and are to be considered as part of the spirit and scope of the invention.

[0096] In the description herein, numerous specific details are provided, such as examples of components and/or methods, to provide a thorough understanding of embodiments of the invention. One skilled in the relevant art will recognize, however, that an embodiment may be able to be practiced without one or more of the specific details, or with other apparatus, systems, assemblies, methods, components, materials, parts, and/or the like. In other instances, well-known structures, components, systems, materials, or operations are not specifically shown or described in detail to avoid obscuring aspects of embodiments of the invention. While the invention may be illustrated by using a particular embodiment, this is not and does not limit the invention to any

BabyBjőrn AB, Exhibit 1002
BabyBjőrn AB v. The Ergo Baby Carrier, Inc.
IPR2025-00111, Page 33 of 112

particular embodiment and a person of ordinary skill in the art will recognize that additional embodiments are readily understandable and are a part of this invention.

[0097] It will also be appreciated that one or more of the elements depicted in the drawings/figures can also be implemented in a more separated or integrated manner, or even removed or rendered as inoperable in certain cases, as is useful in accordance with a particular application. Additionally, any signal arrows in the drawings/Figures should be considered only as exemplary, and not limiting, unless otherwise specifically noted.

[0098] The representative embodiments, which have been described in detail herein, have been presented by way of example and not by way of limitation. It will be understood by those skilled in the art that various changes may be made in the form and details of the described embodiments resulting in equivalent embodiments that remain within the scope of the appended claims.

BabyBjőrn AB, Exhibit 1002
BabyBjőrn AB v. The Ergo Baby Carrier, Inc.
IPR2025-00111, Page 34 of 112

CLAIMS

1. An adjustable child carrier for supporting a child by a user, the adjustable child carrier comprising:

an adjustable waist belt configured to wrap a torso of the user;

one or more adjustable shoulder straps;

a front panel configured to support a child torso;

a first thigh support;

a second thigh support,

wherein the front panel, the first thigh support, and the second thigh support, in combination provide a child carrying area;

one or more thigh width adjusters; and

one or more thigh width adjuster fasteners;

wherein the one or more thigh width adjusters are attached to the front panel and configured to couple to the one or more thigh width adjuster fasteners,

wherein the one or more thigh width adjusters adjusts the child carrying area when coupled to the one or more thigh width adjuster fasteners.

BabyBjőrn AB, Exhibit 1002
BabyBjőrn AB v. The Ergo Baby Carrier, Inc.
IPR2025-00111, Page 35 of 112

ABSTRACT

An adjustable child carrier includes an adjustable bucket seat that can be adjusted to accommodate children of a wide range of sizes. The child carrier includes one or more adjustments that work alone or in cooperation to adjust the depth and width of the bucket seat area provided by the child carrier. The carrier is capable of supporting children of various sizes in an ergonomic position appropriate for the child's size.

BabyBjőrn AB, Exhibit 1002
BabyBjőrn AB v. The Ergo Baby Carrier, Inc.
IPR2025-00111, Page 36 of 112

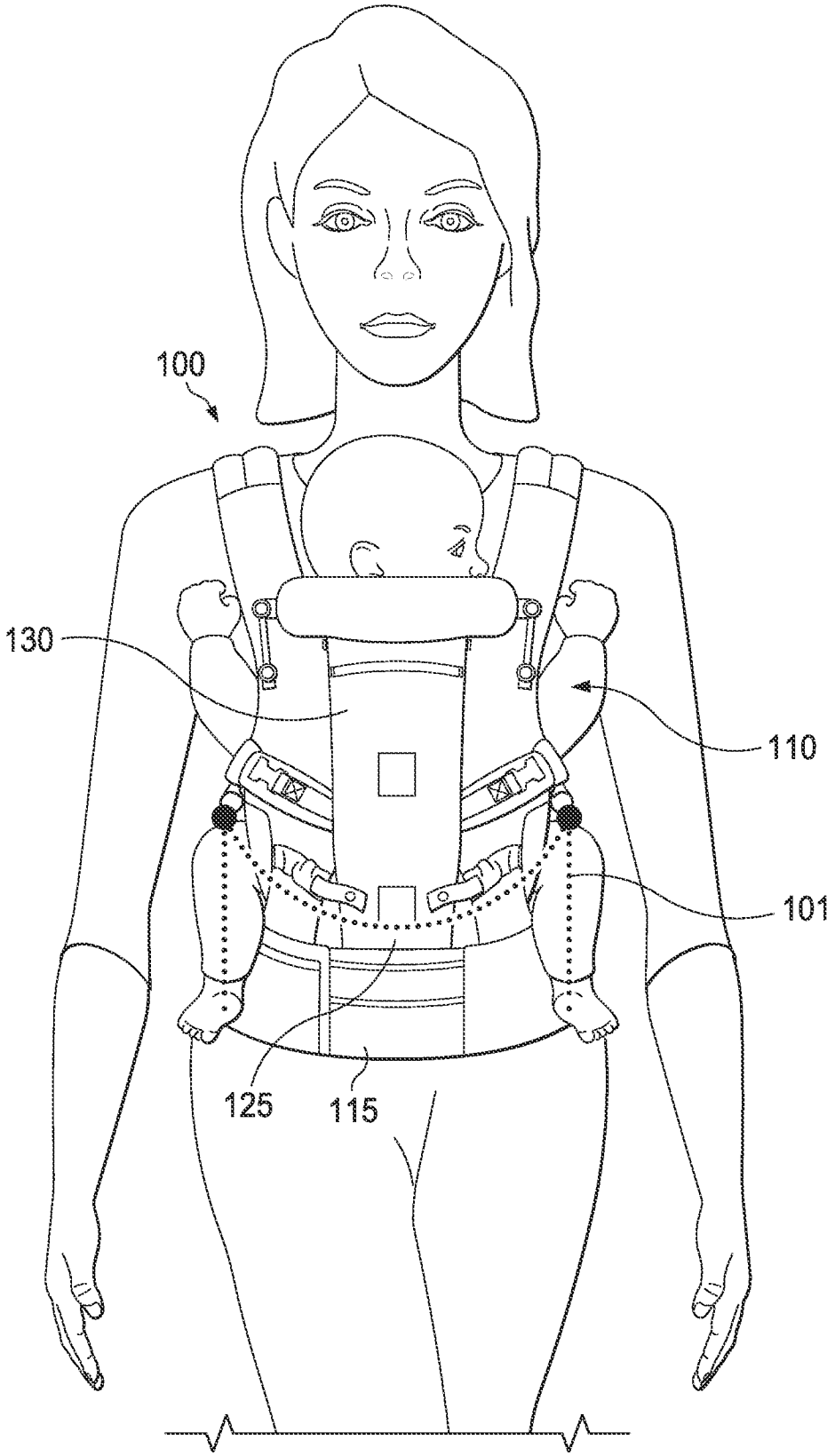

FIG. 1

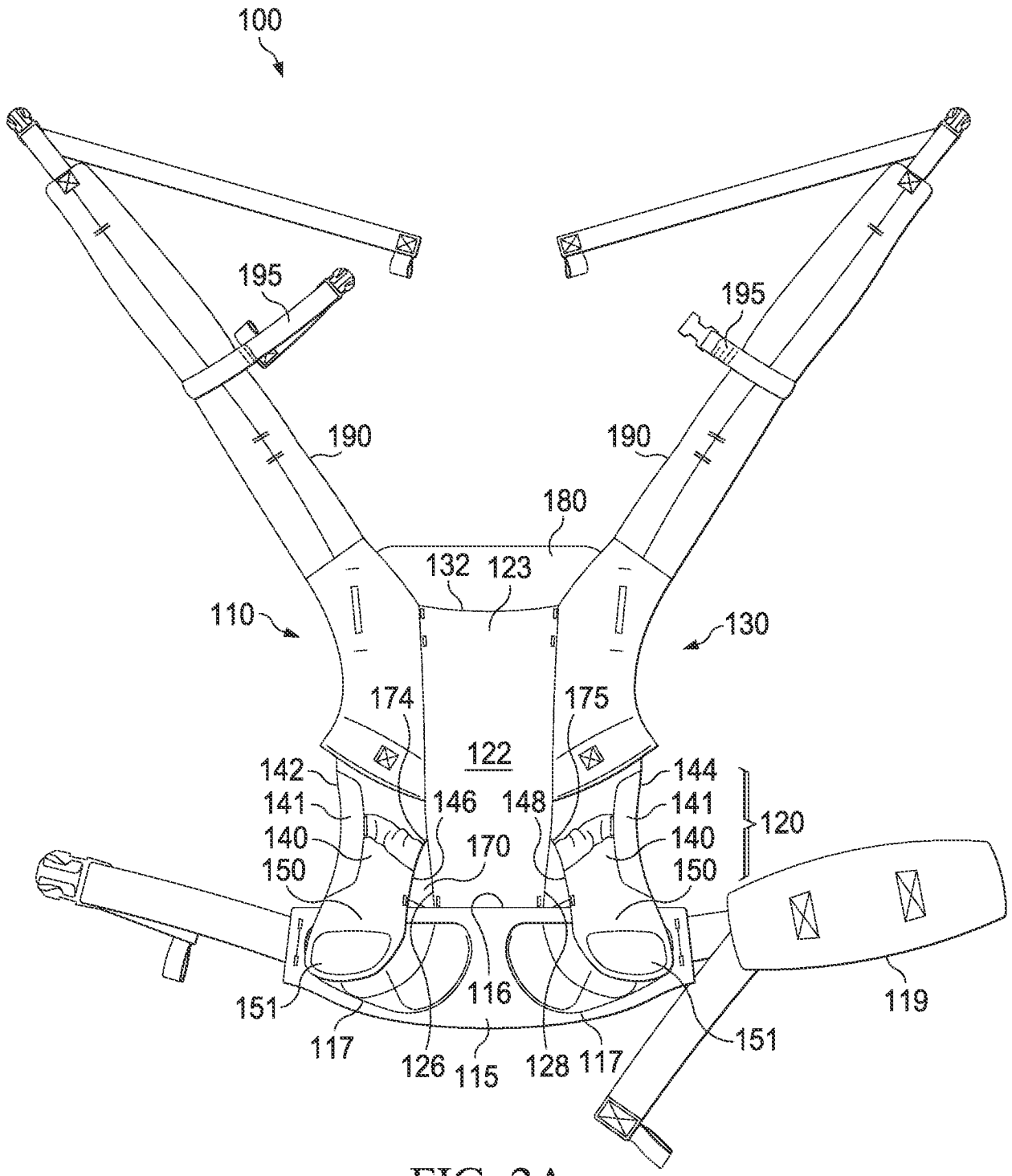
100
195
195
190
190
180
132
123
110
130
174
175
122
142
144
141
146
148
141
120
140
170
140
150
150
151
116
119
117
126
115
128
117
151

FIG. 2A

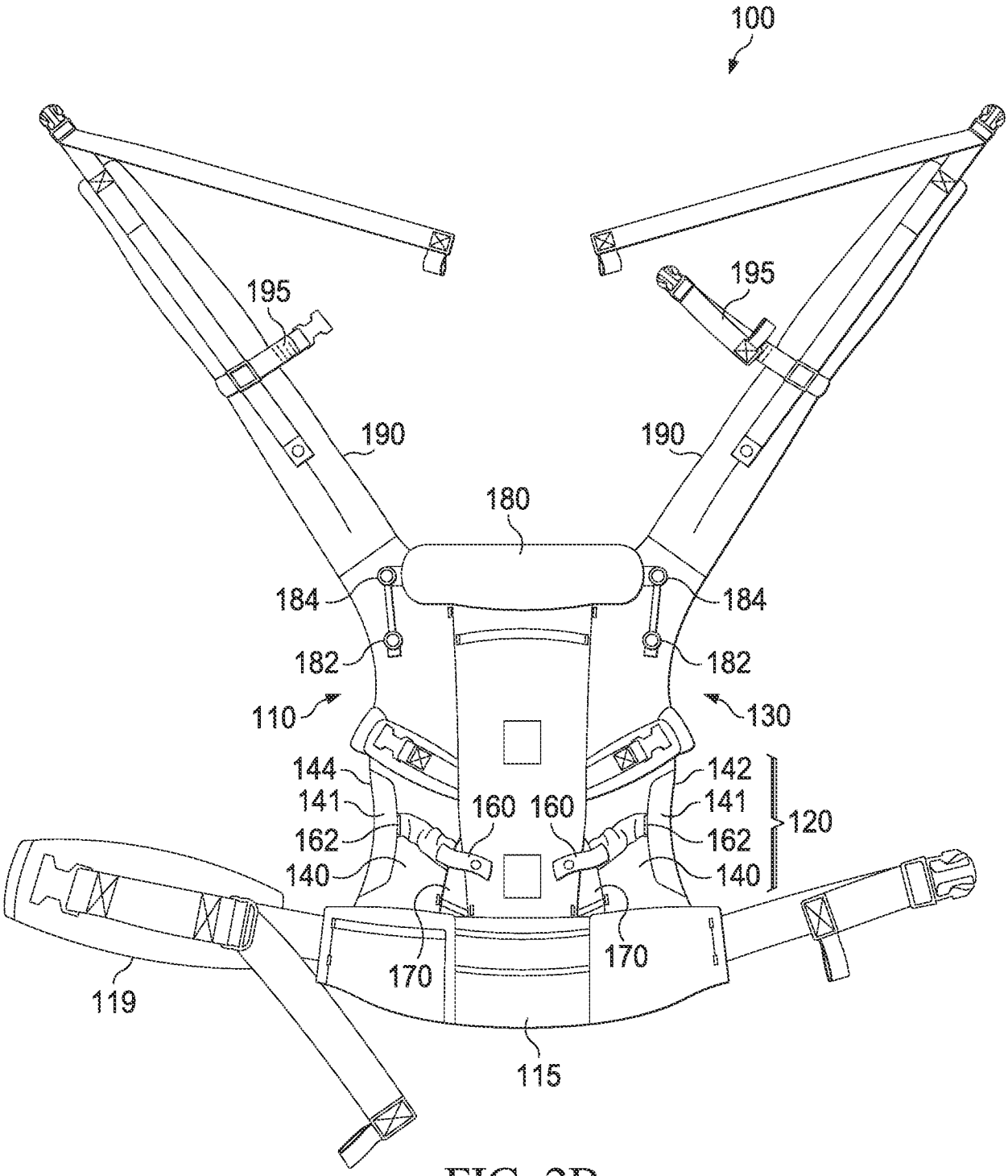
100
195
195
190
190
180
184
184
182
182
110
130
144
142
141
141
160
160
120
162
162
140
140
170
170
119
115

FIG. 2B

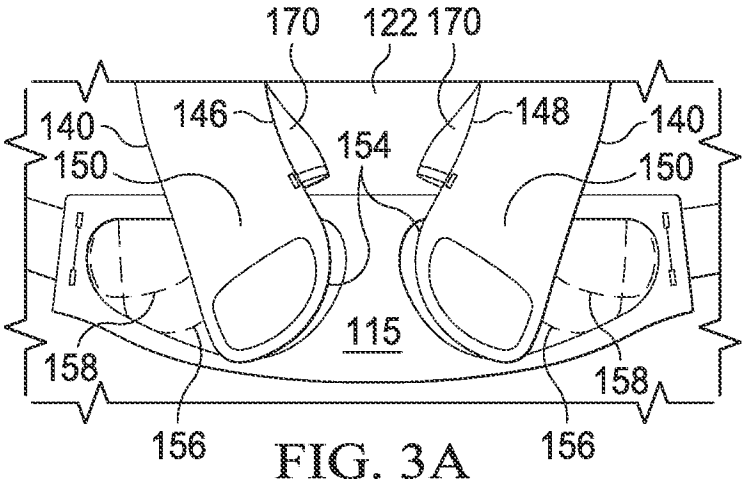

FIG. 3A

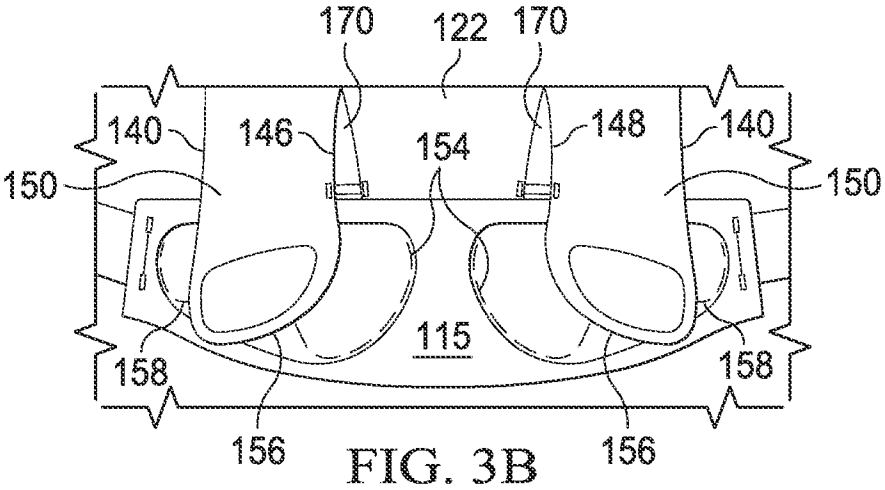

FIG. 3B

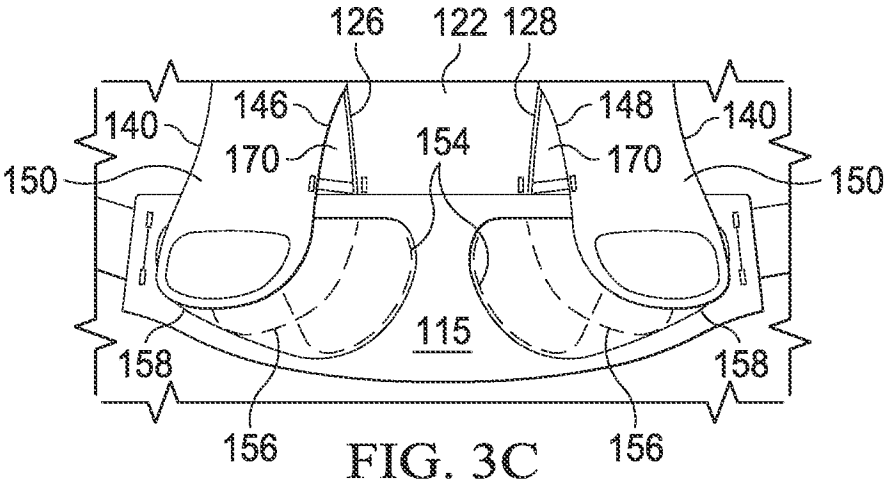

FIG. 3C

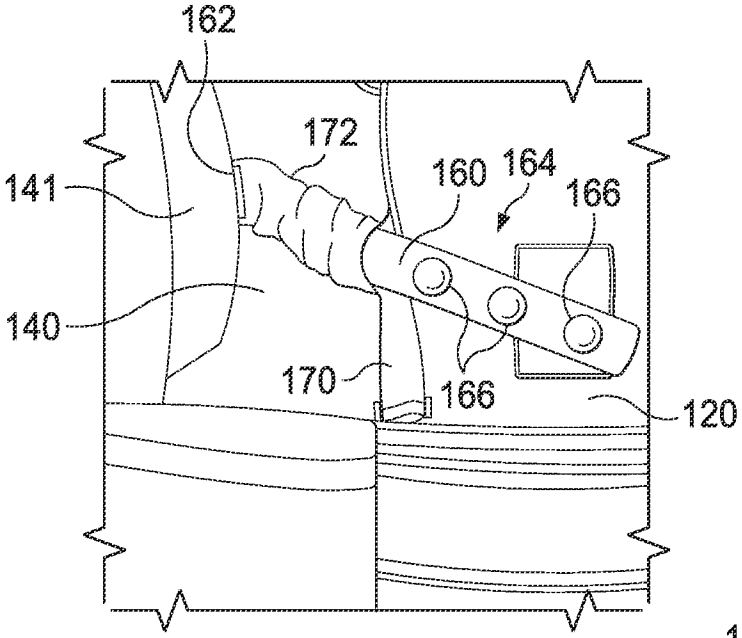

FIG. 4A

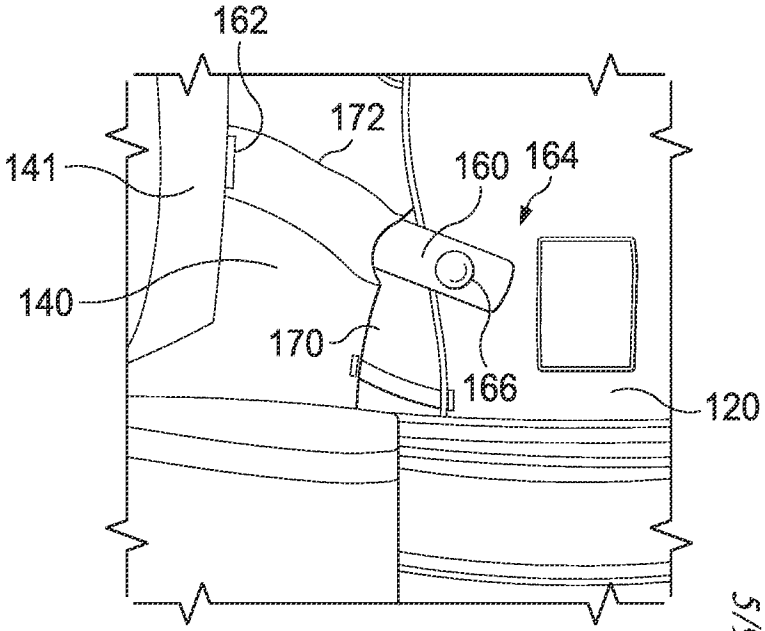

FIG. 4C

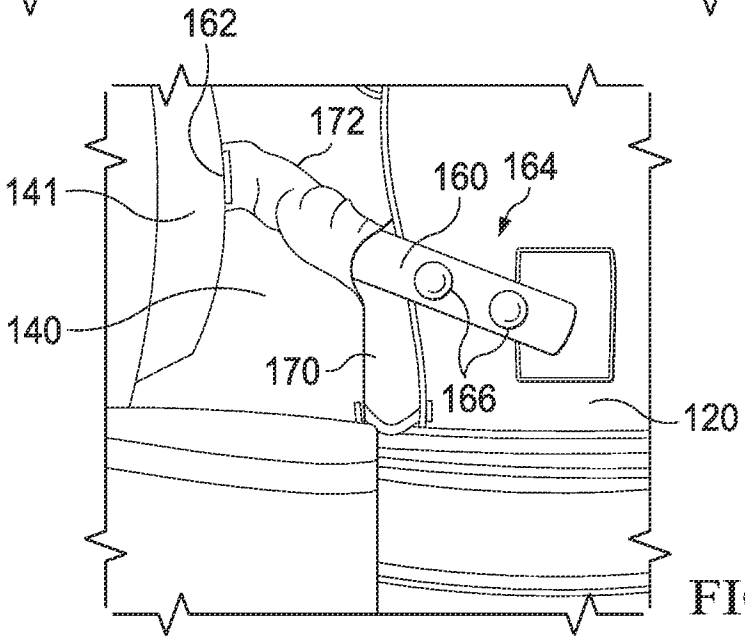

FIG. 4B

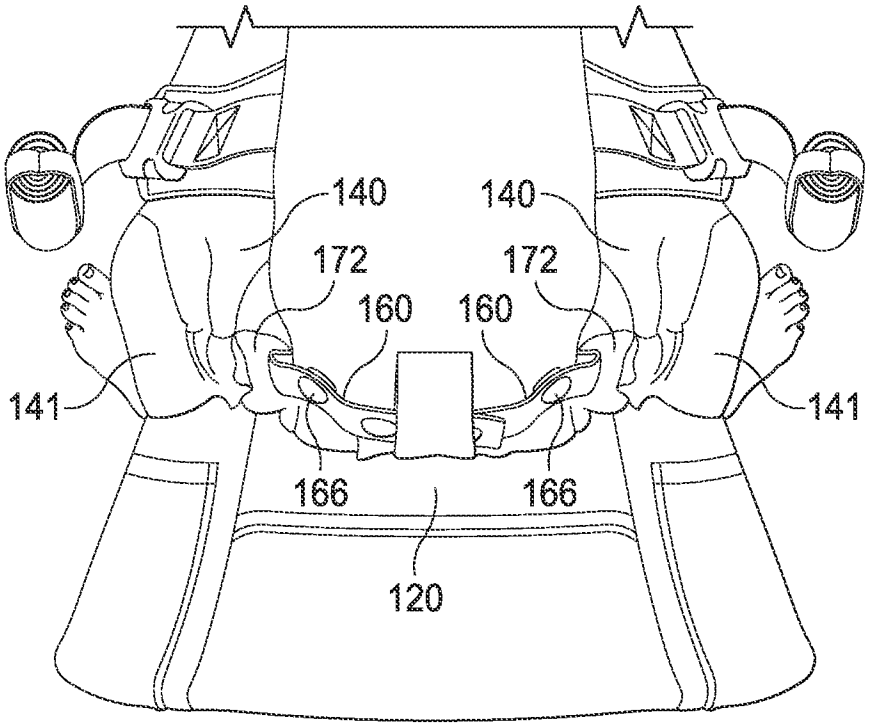
140
140
172
172
160
160
141
141
166
166
120

FIG. 5A

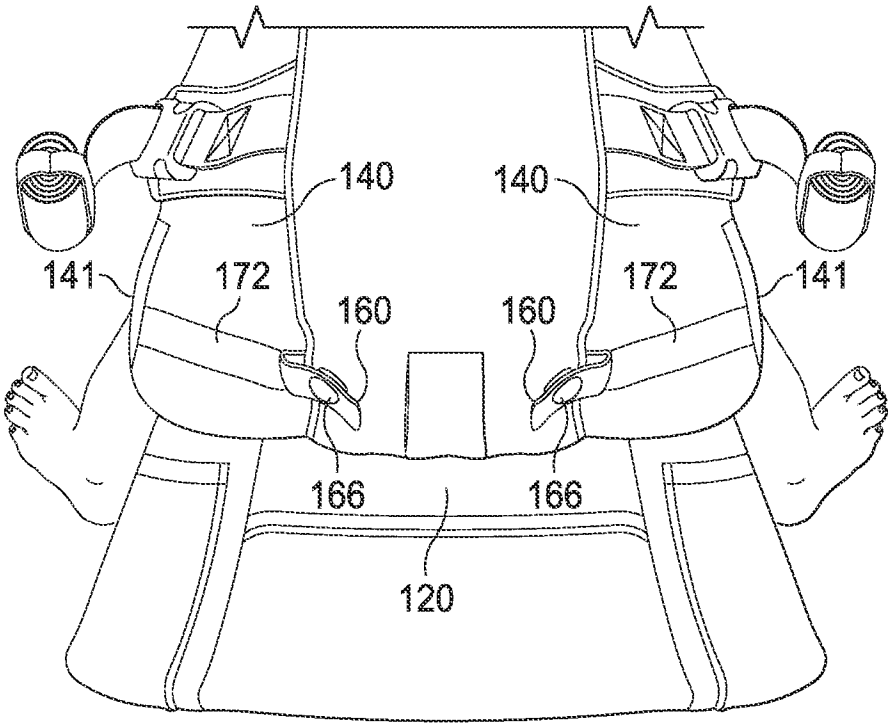
140
140
141
172
172
141
160
160
166
166
120

FIG. 5B

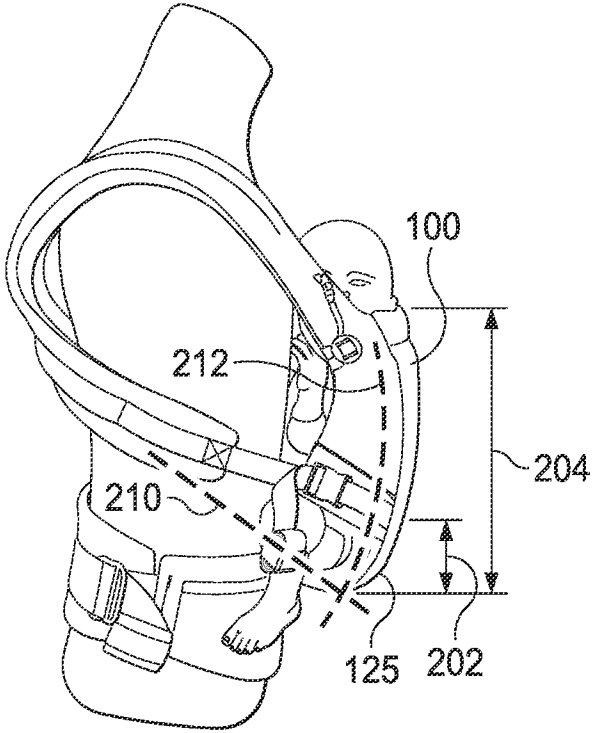

FIG. 6A

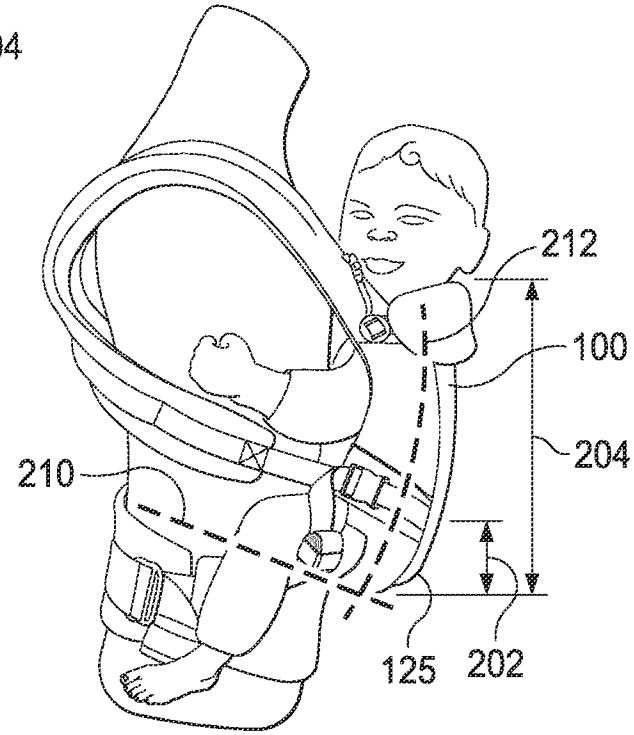

FIG. 6B

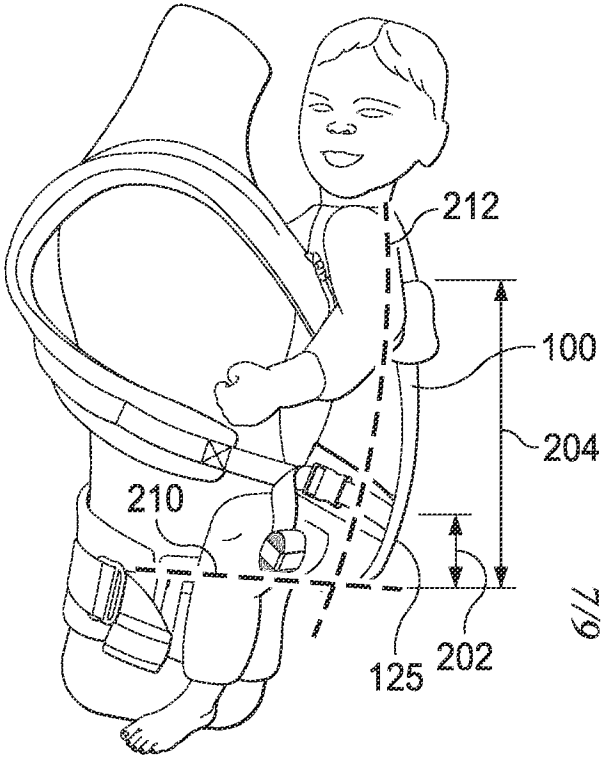

FIG. 6C

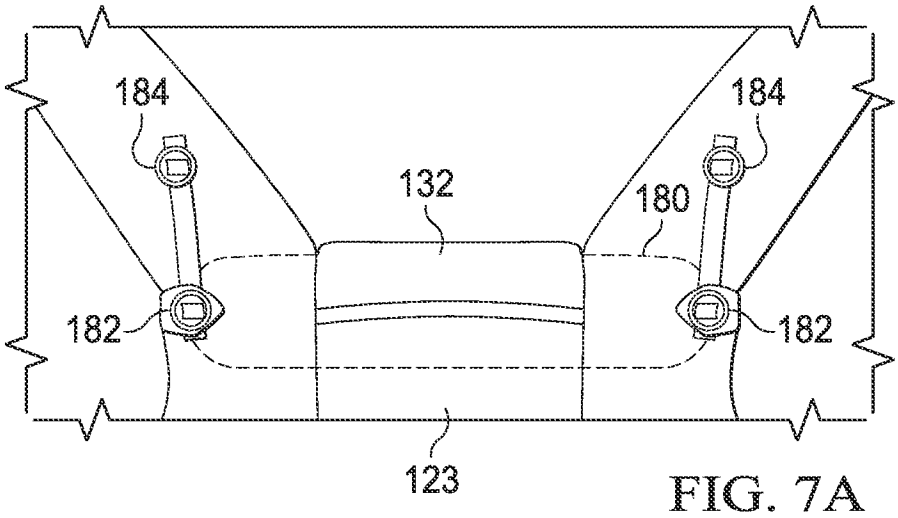

FIG. 7A

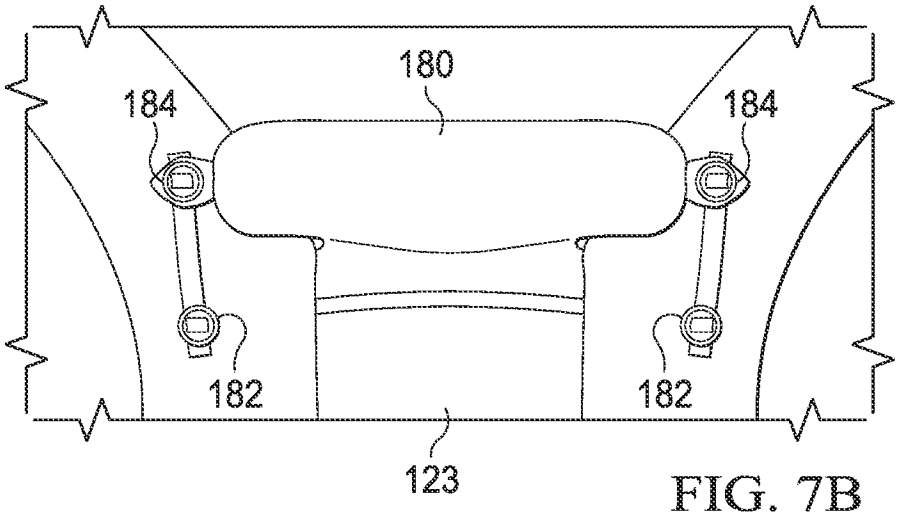

FIG. 7B

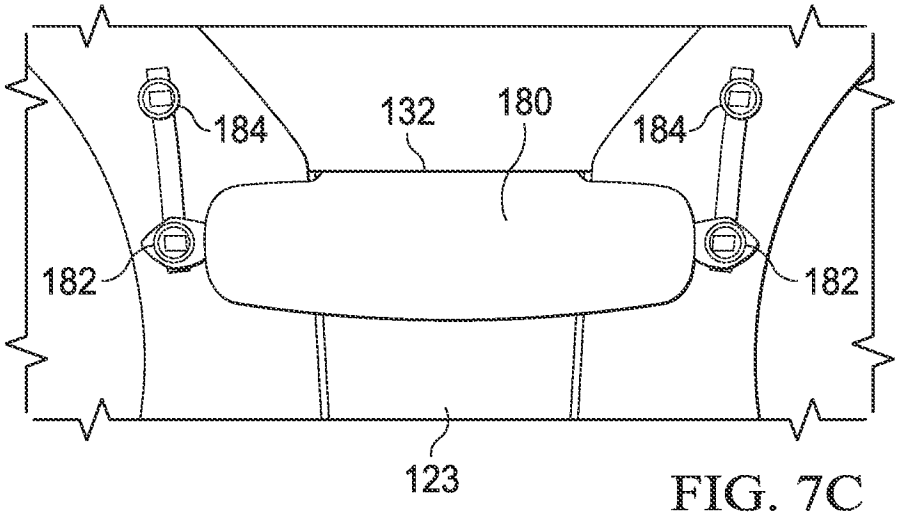

FIG. 7C

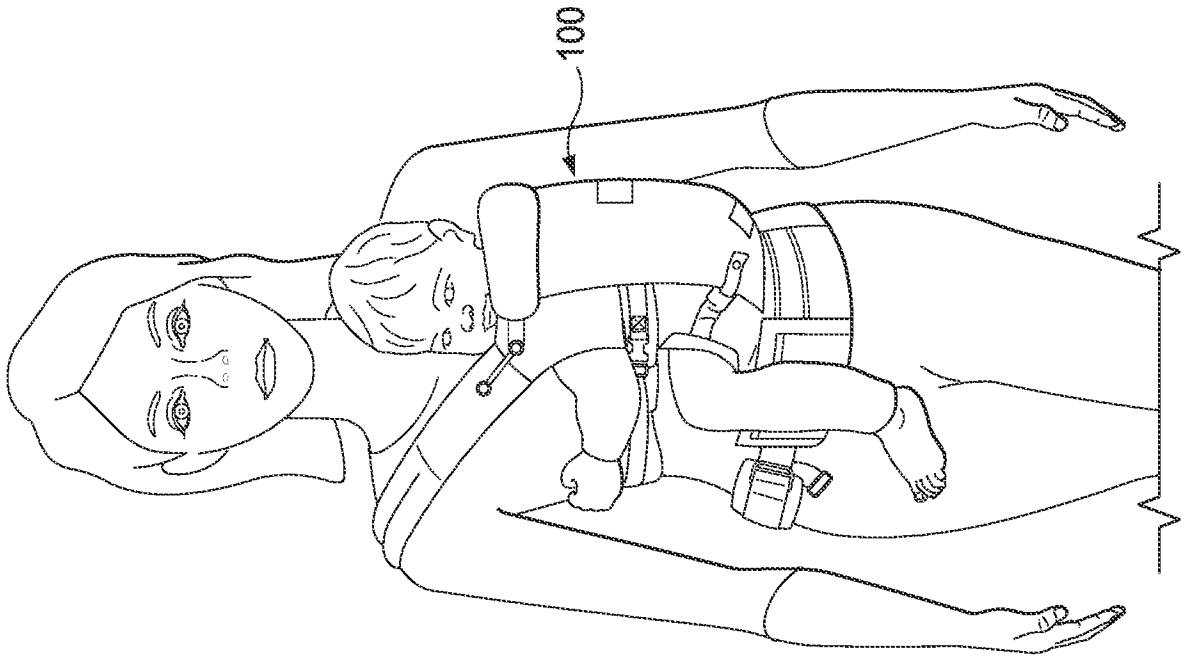

FIG. 9

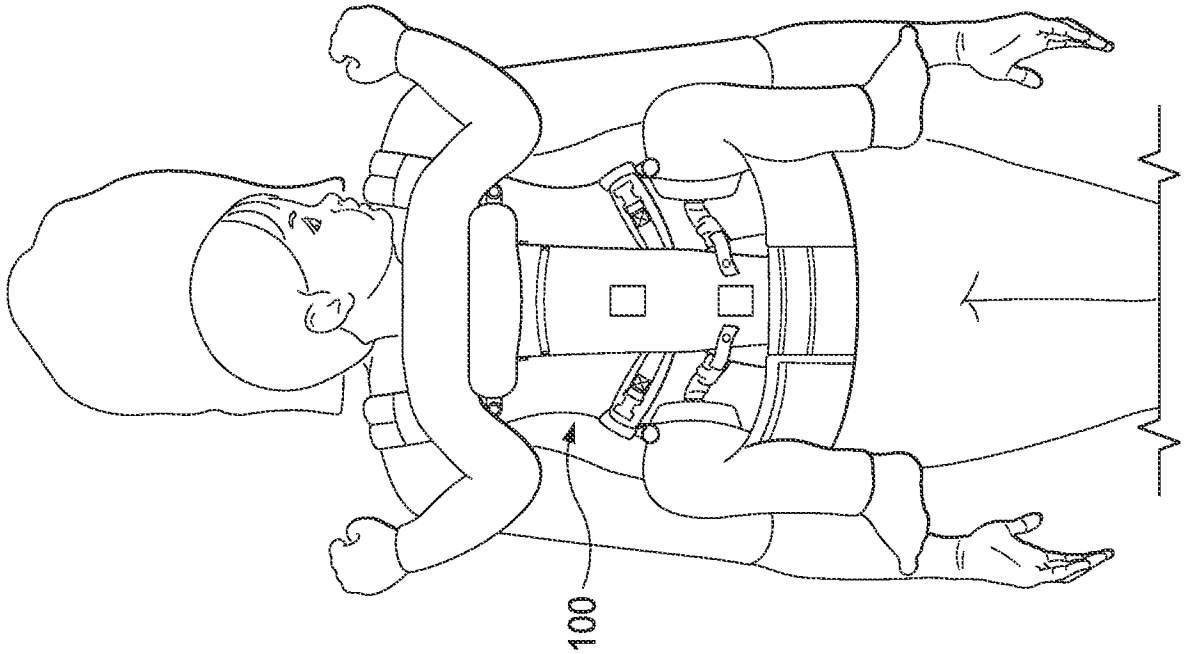

FIG. 8

IN THE UNITED STATES PATENT AND TRADEMARK OFFICE

Application of:	Telford, Rodney V.	Docket No.:	2877-11.15
Serial No.:	18/136,979	Group Art Unit No.:	
Filed:	April 8, 2020	Confirmation No.:	
Title:	ADJUSTABLE CHILD CARRIER	Examiner:	

Mail Stop Amendment
Commissioner for Patents
P.O. Box 1450
Alexandria, VA 22313-1450

PRELIMINARY AMENDMENT

Entry of the following Preliminary Amendment prior to examination on the merits and any calculation of claim fees is respectfully requested.

Amendments to the Claims begin on page 2 of this paper.

Remarks begin on page 8 of this paper.

Amendments to the Claims:

This listing of the claims will replace all prior versions, and listings, of claims in the application.

Listing of the Claims

1. (Cancelled)

2. (New) An adjustable child carrier for supporting a child by a user, the adjustable child carrier comprising:

a body configured to support the child;

a neck support comprising a first neck support attachment and a second neck support attachment;

a first shoulder strap coupled to the body and configured to extend over a first shoulder of the user;

a second shoulder strap coupled to the body and configured to extend over a second shoulder of the user;

a first attachment disposed on the first shoulder strap and configured to receive the first neck support attachment;

a second attachment disposed on the second shoulder strap and configured to receive the second neck support attachment,

wherein the neck support is configured in an upward neck supporting position when the first neck support attachment is coupled to the first attachment and the second neck support attachment is coupled to the second attachment;

the body forming a first thigh support and a second thigh support; and

at least one thigh support adjuster coupled to the first thigh support and the second thigh support,

wherein adjustment of the at least one thigh support adjuster adjusts a width of the body.

3. (New) The adjustable child carrier of claim 2, wherein the body forming the first thigh support and the second thigh support form a seat for the child.

BabyBjőrn AB, Exhibit 1002
BabyBjőrn AB v. The Ergo Baby Carrier, Inc.
IPR2025-00111, Page 47 of 112

4. (New) The adjustable child carrier of claim 3, wherein adjustment of the at least one thigh support adjuster further adjusts a depth of the seat for the child.

5. (New) The adjustable child carrier of claim 4, further comprising indicia indicating a position for the at least one thigh support adjuster to be positioned to support various child sizes in the seat.

6. (New) The adjustable child carrier of claim 2, further comprising:

a third attachment disposed on the body and configured to receive the first neck support attachment; and

a fourth attachment disposed on the body and configured to receive the second neck support attachment,

wherein the neck support is configured in a downward position when the first neck support attachment is coupled to the third attachment and the second neck support attachment is coupled to the fourth attachment.

7. (New) The adjustable child carrier of claim 2, further comprising an adjustable chest strap configured to attach the first shoulder strap to the second shoulder strap.

8. (New) The adjustable child carrier of claim 2, further comprising an upper support portion configured to support an upper body of the child between a torso of the user while the child is in the adjustable child carrier.

9. (New) An adjustable child carrier for supporting a child by a user, the adjustable child carrier comprising:

a body configured to support the child between the body and a torso of the user;

a neck support comprising a first neck support attachment and a second neck support attachment;

a first shoulder strap coupled to the body and configured to extend over a first shoulder of the user;

a second shoulder strap coupled to the body and configured to extend over a second shoulder of the user;

a first attachment disposed on the first shoulder strap and configured to receive the first neck support attachment;

a second attachment disposed on the second shoulder strap and configured to receive the second neck support attachment,

wherein the neck support is configured in an upward neck supporting position when the first neck support attachment is coupled to the first attachment and the second neck support attachment is coupled to the second attachment;

the body forming a first thigh support and a second thigh support; and

at least one thigh support adjuster coupled to the first thigh support and the second thigh support,

wherein adjustment of the at least one thigh support adjuster adjusts a length and a width of the body.

10. (New) The adjustable child carrier of claim 9, further comprising an adjustable chest strap configured to attach the first shoulder strap to the second shoulder strap.

11. (New) The adjustable child carrier of claim 10, wherein the body forming the first thigh support and the second thigh support form a seat for the child.

12. (New) The adjustable child carrier of claim 11, wherein adjustment of the at least one thigh support adjuster further adjusts a depth of the seat for the child.

BabyBjőrn AB, Exhibit 1002
BabyBjőrn AB v. The Ergo Baby Carrier, Inc.
IPR2025-00111, Page 49 of 112

13. (New) The adjustable child carrier of claim 12, further comprising indicia indicating a position for the at least one thigh support adjuster to be positioned to support various child sizes in the seat.

14. (New) The adjustable child carrier of claim 9, further comprising:

a third attachment disposed on the body and configured to receive the first neck support attachment; and

a fourth attachment disposed on the body and configured to receive the second neck support attachment,

wherein the neck support is configured in a downward position when the first neck support attachment is coupled to the third attachment and the second neck support attachment is coupled to the fourth attachment.

15. (New) The adjustable child carrier of claim 9, further comprising an upper support portion configured to support an upper body of the child while in the adjustable child carrier.

BabyBjőrn AB, Exhibit 1002
BabyBjőrn AB v. The Ergo Baby Carrier, Inc.
IPR2025-00111, Page 50 of 112

16. (New) An adjustable child carrier for supporting a child by a user, the adjustable child carrier comprising:

a body configured to support the child;

a neck support comprising a first neck support attachment and a second neck support attachment;

a first shoulder strap coupled to the body and configured to extend over a first shoulder of the user;

a second shoulder strap coupled to the body and configured to extend over a second shoulder of the user;

a first attachment disposed on the first shoulder strap and configured to receive the first neck support attachment;

a second attachment disposed on the second shoulder strap and configured to receive the second neck support attachment,

wherein the neck support is configured in an upward neck supporting position when the first neck support attachment is coupled to the first attachment and the second neck support attachment is coupled to the second attachment;

a third attachment disposed on the body and configured to receive the first neck support attachment; and

a fourth attachment disposed on the body and configured to receive the second neck support attachment,

wherein the neck support is configured in a downward position when the first neck support attachment is coupled to the third attachment and the second neck support attachment is coupled to the fourth attachment.

the body forming a first thigh support and a second thigh support;

wherein the body, the first thigh support, and the second thigh support in combination form a seat for the child; and

at least one thigh support adjuster coupled to the first thigh support and the second thigh support,

wherein adjustment of the at least one thigh support adjuster adjusts a width of the body.

BabyBjőrn AB, Exhibit 1002
BabyBjőrn AB v. The Ergo Baby Carrier, Inc.
IPR2025-00111, Page 51 of 112

17. (New) The adjustable child carrier of claim 16, further comprising an adjustable chest strap configured to attach the first shoulder strap to the second shoulder strap.

18. (New) The adjustable child carrier of claim 16, wherein adjustment of the at least one thigh support adjuster further adjusts a depth of the seat for the child.

19. (New) The adjustable child carrier of claim 16, further comprising indicia indicating a position for the at least one thigh support adjuster to be positioned to support various child sizes in the seat.

20. (New) The adjustable child carrier of claim 16, further comprising an upper support portion configured to support an upper body of the child between a torso of the user while the child is in the adjustable child carrier.

21. (New) The adjustable child carrier of claim 16, wherein the seat is configured to support the child in a spread squat position.

BabyBjőrn AB, Exhibit 1002
BabyBjőrn AB v. The Ergo Baby Carrier, Inc.
IPR2025-00111, Page 52 of 112

Remarks:

Prior to the present communication, claim 1 was pending with the Application as originally filed. By way of this amendment, claim 1 has been cancelled without prejudice or disclaimer and new claims 2-21 have been added. No new matter is added. Applicant respectfully requests amendment of the claims prior to examination.

Conclusion

Applicant submits that claims 2-21, as amended, are in allowable condition and requests a corresponding Notice of Allowance. **In the event of any outstanding issues, Applicant respectfully requests an Examiner Interview.** Any additional fee that might be due in connection with this application should be applied against Deposit Account No. 50-6159.

Respectfully submitted,

ERISE IP, P.A.

By: /Jennifer C. Bailey/
Jennifer C. Bailey; Reg. No. 52,583
7015 College Blvd., Ste. 700
Overland Park, KS 66211
(913) 777-5600

ATTORNEYS FOR APPLICANT
(Docket No. 2877-11.15)

BabyBjőrn AB, Exhibit 1002
BabyBjőrn AB v. The Ergo Baby Carrier, Inc.
IPR2025-00111, Page 53 of 112

UNITED STATES PATENT AND TRADEMARK OFFICE

UNITED STATES DEPARTMENT OF COMMERCE
United States Patent and Trademark Office
Address: COMMISSIONER FOR PATENTS
P.O. Box 1450
Alexandria, Virginia 22313-1450
www.uspto.gov

APPLICATION NO.	FILING DATE	FIRST NAMED INVENTOR	ATTORNEY DOCKET NO.	CONFIRMATION NO.
18/136,979	04/20/2023	Rodney V. Telford	2877-11.15	6273

118925 7590 06/07/2023
Erise IP, P.A.
7015 College Blvd., Ste 700
Overland Park, KS 66211

EXAMINER
CENTRAL, DOCKET

ART UNIT	PAPER NUMBER
3734	

NOTIFICATION DATE	DELIVERY MODE
06/07/2023	ELECTRONIC

Please find below and/or attached an Office communication concerning this application or proceeding.

The time period for reply, if any, is set in the attached communication.

Notice of the Office communication was sent electronically on above-indicated "Notification Date" to the following e-mail address(es):

eofficeaction@appcoll.com
patents@eriseip.com

PTOL-90A (Rev. 04/07)

Decision Granting Request for Prioritized Examination (Track I)	**Application No.** 18/136,979	**Applicant(s)** Telford, Rodney V.	
	Examiner FIKIRTE A GEREMEW	**Art Unit** OMBL	**AIA (FITF) Status** Yes

1. THE REQUEST FILED 20 April 2023 IS **GRANTED** .

   The above-identified application has met the requirements for prioritized examination
   A. ☑ for an original nonprovisional application (Track I).
   B. ☐ for an application undergoing continued examination (RCE).

2. **The above-identified application will undergo prioritized examination**. The application will be accorded special status throughout its entire course of prosecution until one of the following occurs:

   A. filing a **petition for extension of time** to extend the time period for filing a reply;

   B. filing an **amendment to amend the application to contain more than four independent claims, more than thirty total claims** , or a multiple dependent claim;

   C. filing a **request for continued examination** ;

   D. filing a notice of appeal;

   E. filing a request for suspension of action;

   F. mailing of a notice of allowance;

   G. mailing of a final Office action;

   H. completion of examination as defined in 37 CFR 41.102; or

   I. abandonment of the application.

Telephone inquiries with regard to this decision should be directed to FIKIRTE GEREMEW at (703) 756-1930. In his/her absence, calls may be directed to Petition Help Desk at (571) 272-3282.

/FIKIRTE A GEREMEW/ PROGRAM SUPPORT ASSISTANT, OMBL	

UNITED STATES PATENT AND TRADEMARK OFFICE

UNITED STATES DEPARTMENT OF COMMERCE
United States Patent and Trademark Office
Address: COMMISSIONER FOR PATENTS
P.O. Box 1450
Alexandria, Virginia 22313-1450
www.uspto.gov

APPLICATION NO.	FILING DATE	FIRST NAMED INVENTOR	ATTORNEY DOCKET NO.	CONFIRMATION NO.
18/136,979	04/20/2023	Rodney V. Telford	2877-11.15	6273

118925 7590 08/07/2023
Erise IP, P.A.
7015 College Blvd., Ste 700
Overland Park, KS 66211

EXAMINER
HELVEY, PETER N.

ART UNIT	PAPER NUMBER
3734	

NOTIFICATION DATE	DELIVERY MODE
08/07/2023	ELECTRONIC

Please find below and/or attached an Office communication concerning this application or proceeding.

The time period for reply, if any, is set in the attached communication.

Notice of the Office communication was sent electronically on above-indicated "Notification Date" to the following e-mail address(es):

eofficeaction@appcoll.com
patents@eriseip.com

PTOL-90A (Rev. 04/07)

Office Action Summary	Application No. 18/136,979	Applicant(s) Telford, Rodney V.	
	Examiner PETER N HELVEY	Art Unit 3734	AIA (FITF) Status Yes

-- The MAILING DATE of this communication appears on the cover sheet with the correspondence address --

Period for Reply

A SHORTENED STATUTORY PERIOD FOR REPLY IS SET TO EXPIRE 3 MONTHS FROM THE MAILING DATE OF THIS COMMUNICATION.

- Extensions of time may be available under the provisions of 37 CFR 1.136(a). In no event, however, may a reply be timely filed after SIX (6) MONTHS from the mailing date of this communication.
- If NO period for reply is specified above, the maximum statutory period will apply and will expire SIX (6) MONTHS from the mailing date of this communication.
- Failure to reply within the set or extended period for reply will, by statute, cause the application to become ABANDONED (35 U.S.C. § 133). Any reply received by the Office later than three months after the mailing date of this communication, even if timely filed, may reduce any earned patent term adjustment. See 37 CFR 1.704(b).

Status

1)☑ Responsive to communication(s) filed on 5/2/2023.

☐ A declaration(s)/affidavit(s) under **37 CFR 1.130(b)** was/were filed on _____.

2a)☐ This action is **FINAL.** 2b) ☑ This action is non-final.

3)☐ An election was made by the applicant in response to a restriction requirement set forth during the interview on _____; the restriction requirement and election have been incorporated into this action.

4)☐ Since this application is in condition for allowance except for formal matters, prosecution as to the merits is closed in accordance with the practice under *Ex parte Quayle*, 1935 C.D. 11, 453 O.G. 213.

Disposition of Claims*

5) ☑ Claim(s) 2-21 is/are pending in the application.

5a) Of the above claim(s) _____ is/are withdrawn from consideration.

6) ☐ Claim(s) _____ is/are allowed.

7) ☑ Claim(s) 2-21 is/are rejected.

8) ☐ Claim(s) _____ is/are objected to.

9) ☐ Claim(s) _____ are subject to restriction and/or election requirement

* If any claims have been determined allowable, you may be eligible to benefit from the **Patent Prosecution Highway** program at a participating intellectual property office for the corresponding application. For more information, please see http://www.uspto.gov/patents/init_events/pph/index.jsp or send an inquiry to **PPHfeedback@uspto.gov.**

Application Papers

10)☐ The specification is objected to by the Examiner.

11)☑ The drawing(s) filed on 5/2/2023 is/are: a)☑ accepted or b)☐ objected to by the Examiner.

Applicant may not request that any objection to the drawing(s) be held in abeyance. See 37 CFR 1.85(a).

Replacement drawing sheet(s) including the correction is required if the drawing(s) is objected to. See 37 CFR 1.121(d).

Priority under 35 U.S.C. § 119

12)☐ Acknowledgment is made of a claim for foreign priority under 35 U.S.C. § 119(a)-(d) or (f).

Certified copies:

a)☐ All b)☐ Some** c)☐ None of the:

1.☐ Certified copies of the priority documents have been received.

2.☐ Certified copies of the priority documents have been received in Application No. _____.

3.☐ Copies of the certified copies of the priority documents have been received in this National Stage application from the International Bureau (PCT Rule 17.2(a)).

** See the attached detailed Office action for a list of the certified copies not received.

Attachment(s)

1) ☐ Notice of References Cited (PTO-892)

2) ☑ Information Disclosure Statement(s) (PTO/SB/08a and/or PTO/SB/08b) Paper No(s)/Mail Date _____.

3) ☐ Interview Summary (PTO-413) Paper No(s)/Mail Date _____.

4) ☐ Other: _____.

BabyBjőrn AB, Exhibit 1002
BabyBjőrn AB v. The Ergo Baby Carrier, Inc.
IPR2025-00111, Page 57 of 112

DETAILED ACTION

Notice of Pre-AIA or AIA Status

1. The present application, filed on or after March 16, 2013, is being examined under the first inventor to file provisions of the AIA.

Double Patenting

2. The nonstatutory double patenting rejection is based on a judicially created doctrine grounded in public policy (a policy reflected in the statute) so as to prevent the unjustified or improper timewise extension of the "right to exclude" granted by a patent and to prevent possible harassment by multiple assignees. A nonstatutory double patenting rejection is appropriate where the conflicting claims are not identical, but at least one examined application claim is not patentably distinct from the reference claim(s) because the examined application claim is either anticipated by, or would have been obvious over, the reference claim(s). See, e.g., *In re Berg*, 140 F.3d 1428, 46 USPQ2d 1226 (Fed. Cir. 1998); *In re Goodman*, 11 F.3d 1046, 29 USPQ2d 2010 (Fed. Cir. 1993); *In re Longi*, 759 F.2d 887, 225 USPQ 645 (Fed. Cir. 1985); *In re Van Ornum*, 686 F.2d 937, 214 USPQ 761 (CCPA 1982); *In re Vogel*, 422 F.2d 438, 164 USPQ 619 (CCPA 1970); *In re Thorington*, 418 F.2d 528, 163 USPQ 644 (CCPA 1969).

A timely filed terminal disclaimer in compliance with 37 CFR 1.321(c) or 1.321(d) may be used to overcome an actual or provisional rejection based on nonstatutory double patenting provided the reference application or patent either is shown to be commonly owned with the examined application, or claims an invention made as a

result of activities undertaken within the scope of a joint research agreement. See MPEP § 717.02 for applications subject to examination under the first inventor to file provisions of the AIA as explained in MPEP § 2159. See MPEP § 2146 *et seq.* for applications not subject to examination under the first inventor to file provisions of the AIA. A terminal disclaimer must be signed in compliance with 37 CFR 1.321(b).

The USPTO Internet website contains terminal disclaimer forms which may be used. Please visit www.uspto.gov/patent/patents-forms. The filing date of the application in which the form is filed determines what form (e.g., PTO/SB/25, PTO/SB/26, PTO/AIA/25, or PTO/AIA/26) should be used. A web-based eTerminal Disclaimer may be filled out completely online using web-screens. An eTerminal Disclaimer that meets all requirements is auto-processed and approved immediately upon submission. For more information about eTerminal Disclaimers, refer to www.uspto.gov/patents/process/file/efs/guidance/eTD-info-I.jsp.

3. Claims 2-21 are rejected on the ground of nonstatutory double patenting as being unpatentable over claims 1-20 of U.S. Patent No. 10,426,275. Although the claims at issue are not identical, they are not patentably distinct from each other because the claims of the instant application include essentially the same structural elements as the patented claims with only minor variations in verbiage and level of detail.

4. Claims 2-21 are rejected on the ground of nonstatutory double patenting as being unpatentable over claims 1-20 of U.S. Patent No. 11,051,634. Although the claims at issue are not identical, they are not patentably distinct from each other because the claims of the instant application include essentially the same structural elements as the patented claims with only minor variations in verbiage and level of detail.

5. Claims 2-21 are rejected on the ground of nonstatutory double patenting as being unpatentable over claims 1-20 of U.S. Patent No. 11,583,104. Although the claims at issue are not identical, they are not patentably distinct from each other because the claims of the instant application include essentially the same structural elements as the patented claims with only minor variations in verbiage and level of detail.

Conclusion

6. Any inquiry concerning this communication or earlier communications from the examiner should be directed to PETER N. HELVEY whose telephone number is (571)270-1423. The examiner can normally be reached Monday-Friday 10am-7pm EST.

Examiner interviews are available via telephone, in-person, and video conferencing using a USPTO supplied web-based collaboration tool. To schedule an interview, applicant is encouraged to use the USPTO Automated Interview Request (AIR) at http://www.uspto.gov/interviewpractice.

If attempts to reach the examiner by telephone are unsuccessful, the examiner's supervisor, Nathan Newhouse can be reached on 571-272-4544. The fax phone number for the organization where this application or proceeding is assigned is 571-273-8300.

Information regarding the status of published or unpublished applications may be obtained from Patent Center. Unpublished application information in Patent Center is available to registered users. To file and manage patent submissions in Patent Center, visit: https://patentcenter.uspto.gov. Visit https://www.uspto.gov/patents/apply/patent-center for more information about Patent Center and

https://www.uspto.gov/patents/docx for information about filing in DOCX format. For additional questions, contact the Electronic Business Center (EBC) at 866-217-9197 (toll-free). If you would like assistance from a USPTO Customer Service Representative, call 800-786-9199 (IN USA OR CANADA) or 571-272-1000.

/PETER N HELVEY/
Primary Examiner, Art Unit 3734

August 1, 2023

UNITED STATES PATENT AND TRADEMARK OFFICE

USPTO Automated Interview Request (AIR)

Aug 9 2023

This paper requesting to schedule and/or conduct an interview is appropriate because:

This submission is requested to be accepted as an authorization for this interview to communicate via the internet. Recognizing that Internet communications are not secure, I hereby authorize the USPTO to communicate with the undersigned concerning scheduling of the interview via video conference, instant messaging, or electronic mail, and to conduct the interview in accordance with office practice including video conferencing.

Name(s):
Virginia Brown

S-signature:
/Virginia Brown/

Registration Number:
80538

U.S. Application Number:
18136979

Confirmation Number:
6273

E-mail Address:
virginia.brown@eriseip.com

Phone Number:
+1 9132401500

Proposed Time of Interview:
8-16-2023 11:00 AM ET

Alternative Proposed Time(s) of Interview:
8-17-2023 3:00 PM ET

Alternative Proposed Time(s) of Interview:
8-17-2023 2:30 PM ET

Prefered Interview Type:
Telephonic

I am the applicant or applicant's representative for this application.

Topic for Discussion:
Proposed claim amendments

UNITED STATES
PATENT AND TRADEMARK OFFICE

UNITED STATES PATENT AND TRADEMARK OFFICE

UNITED STATES DEPARTMENT OF COMMERCE
United States Patent and Trademark Office
Address: COMMISSIONER FOR PATENTS
P.O. Box 1450
Alexandria, Virginia 22313-1450
www.uspto.gov

APPLICATION NUMBER	FILING OR 371(C) DATE	FIRST NAMED APPLICANT	ATTY. DOCKET NO./TITLE
18/136,979	04/20/2023	Rodney V. Telford	2877-11.15

CONFIRMATION NO. 6273

118925
Erise IP, P.A.
7015 College Blvd., Ste 700
Overland Park, KS 66211

PUBLICATION NOTICE

OC000000060731352

Date Mailed: 08/17/2023

Title:ADJUSTABLE CHILD CARRIER

Publication No.US-2023-0255363-A1
Publication Date:08/17/2023

NOTICE OF PUBLICATION OF APPLICATION

The above-identified application will be electronically published as a patent application publication pursuant to 37 CFR 1.211, et seq. The patent application publication number and publication date are set forth above.

The publication may be accessed through the USPTO's publically available Searchable Databases via the Internet at www.uspto.gov. The direct link to access the publication is currently http://www.uspto.gov/patft/.

The publication process established by the Office does not provide for mailing a copy of the publication to applicant. A copy of the publication may be obtained from the Office upon payment of the appropriate fee set forth in 37 CFR 1.19(a)(1). Orders for copies of patent application publications are handled by the USPTO's Public Records Division. The Public Records Division can be reached by telephone at (571) 272-3150 or (800) 972-6382, by facsimile at (571) 273-3250, by mail addressed to the United States Patent and Trademark Office, Public Records Division, Alexandria, VA 22313-1450 or via the Internet.

In addition, information on the status of the application, including the mailing date of Office actions and the dates of receipt of correspondence filed in the Office, may also be accessed via the Internet through the Patent Electronic Business Center at www.uspto.gov using the public side of the Patent Application Information and Retrieval (PAIR) system. The direct link to access this status information is currently https://portal.uspto.gov/pair/PublicPair. Prior to publication, such status information is confidential and may only be obtained by applicant using the private side of PAIR.

Further assistance in electronically accessing the publication, or about PAIR, is available by calling the Patent Electronic Business Center at 1-866-217-9197.

Office of Data Managment, Application Assistance Unit (571) 272-4000, or (571) 272-4200, or 1-888-786-0101

UNITED STATES PATENT AND TRADEMARK OFFICE

UNITED STATES DEPARTMENT OF COMMERCE
United States Patent and Trademark Office
Address: COMMISSIONER FOR PATENTS
P.O. Box 1450
Alexandria, Virginia 22313-1450
www.uspto.gov

APPLICATION NO.	FILING DATE	FIRST NAMED INVENTOR	ATTORNEY DOCKET NO.	CONFIRMATION NO.
18/136,979	04/20/2023	Rodney V. Telford	2877-11.15	6273

118925 7590 08/22/2023
Erise IP, P.A.
7015 College Blvd., Ste 700
Overland Park, KS 66211

EXAMINER
HELVEY, PETER N.

ART UNIT	PAPER NUMBER
3734	

NOTIFICATION DATE	DELIVERY MODE
08/22/2023	ELECTRONIC

Please find below and/or attached an Office communication concerning this application or proceeding.

The time period for reply, if any, is set in the attached communication.

Notice of the Office communication was sent electronically on above-indicated "Notification Date" to the following e-mail address(es):

eofficeaction@appcoll.com
patents@eriseip.com

PTOL-90A (Rev. 04/07)

Applicant-Initiated Interview Summary	**Application No.** 18/136,979	**Applicant(s)** Telford, Rodney V.		
	Examiner PETER N HELVEY	**Art Unit** 3734	**AIA (First Inventor to File) Status** Yes	**Page** 1 of 1

All Participants (applicant, applicants representative, PTO personnel)	**Title**	**Type**
PETER N HELVEY	Primary Examiner	Telephonic
Virginia Brown	Attorney of Record	
Jennifer Bailey	Attorney of Record	

Date of Interview: 16 August 2023

Issues Discussed:

Proposed Amendment(s)

Discussed applicant's proposed amendments (see attached agenda, NOT for formal entry) which applicant wanted to confirm would be acceptable, which examiner confirmed. Applicant to file formal response including terminal disclaimer to overcome the previous double patenting rejection, which examiner confirmed should be sufficient to pass the case to allowance.

☑ Attachment

/PETER N HELVEY/ Primary Examiner, Art Unit 3734	

Applicant is reminded that a complete written statement as to the substance of the interview must be made of record in the application file. It is the applicants responsibility to provide the written statement, unless the interview was initiated by the Examiner and the Examiner has indicated that a written summary will be provided. See MPEP 713.04
Please further see:
MPEP 713.04
Title 37 Code of Federal Regulations (CFR) § 1.133 Interviews, paragraph (b)
37 CFR § 1.2 Business to be transacted in writing

Applicant recordation instructions: The formal written reply to the last Office action must include the substance of the interview. (See MPEP section 713.04). If a reply to the last Office action has already been filed, applicant is given a non-extendable period of the longer of one month or thirty days from this interview date, or the mailing date of this interview summary form, whichever is later, to file a statement of the substance of the interview.

Examiner recordation instructions: Examiners must summarize the substance of any interview of record. A complete and proper recordation of the substance of an interview should include the items listed in MPEP 713.04 for complete and proper recordation including the identification of the general thrust of each argument or issue discussed, a general indication of any other pertinent matters discussed regarding patentability and the general results or outcome of the interview, to include an indication as to whether or not agreement was reached on the issues raised.

Doc Code: DIST.E.FILE **Document Description: Electronic Terminal Disclaimer - Filed**	PTO/SB/26 U.S. Patent and Trademark Office Department of Commerce

Electronic Petition Request	**TERMINAL DISCLAIMER TO OBVIATE A DOUBLE PATENTING REJECTION OVER A "PRIOR" PATENT**
Application Number	18136979
Filing Date	20-Apr-2023
First Named Inventor	Rodney Telford
Attorney Docket Number	2877-11.15
Title of Invention	ADJUSTABLE CHILD CARRIER

☒ Filing of terminal disclaimer does not obviate requirement for response under 37 CFR 1.111 to outstanding Office Action

☒ This electronic Terminal Disclaimer is not being used for a Joint Research Agreement.

Owner	Percent Interest
The ERGO Baby Carrier, Inc.	100%

The owner(s) with percent interest listed above in the instant application hereby disclaims, except as provided below, the terminal part of the statutory term of any patent granted on the instant application which would extend beyond the expiration date of the full statutory term of prior patent number(s)

10426275

11583104

as the term of said prior patent is presently shortened by any terminal disclaimer. The owner hereby agrees that any patent so granted on the instant application shall be enforceable only for and during such period that it and the prior patent are commonly owned. This agreement runs with any patent granted on the instant application and is binding upon the grantee, its successors or assigns.

In making the above disclaimer, the owner does not disclaim the terminal part of the term of any patent granted on the instant application that would extend to the expiration date of the full statutory term of the prior patent, "as the term of said prior patent is presently shortened by any terminal disclaimer," in the event that said prior patent later:
- expires for failure to pay a maintenance fee;
- is held unenforceable;
- is found invalid by a court of competent jurisdiction;
- is statutorily disclaimed in whole or terminally disclaimed under 37 CFR 1.321;
- has all claims canceled by a reexamination certificate;
- is reissued; or
- is in any manner terminated prior to the expiration of its full statutory term as presently shortened by any terminal disclaimer.

- [x] Terminal disclaimer fee under 37 CFR 1.20(d) is included with Electronic Terminal Disclaimer request.
- [ ] I certify, in accordance with 37 CFR 1.4(d)(4), that the terminal disclaimer fee under 37 CFR 1.20(d) required for this terminal disclaimer has already been paid in the above-identified application.

Applicant claims the following fee status:

- [ ] Small Entity
- [ ] Micro Entity
- [x] Regular Undiscounted

I hereby declare that all statements made herein of my own knowledge are true and that all statements made on information and belief are believed to be true; and further that these statements were made with the knowledge that willful false statements and the like so made are punishable by fine or imprisonment, or both, under Section 1001 of Title 18 of the United States Code and that such willful false statements may jeopardize the validity of the application or any patent issued thereon.

THIS PORTION MUST BE COMPLETED BY THE SIGNATORY OR SIGNATORIES

I certify, in accordance with 37 CFR 1.4(d)(4) that I am:

- [x] An attorney or agent registered to practice before the Patent and Trademark Office who is of record in this application

  Registration Number 52583

- [ ] A sole inventor
- [ ] A joint inventor; I certify that I am authorized to sign this submission on behalf of all of the inventors as evidenced by the power of attorney in the application
- [ ] A joint inventor; all of whom are signing this request

Signature	/Jennifer C. Bailey/
Name	Jennifer C. Bailey

*Statement under 37 CFR 3.73(b) is required if terminal disclaimer is signed by the assignee (owner).
Form PTO/SB/96 may be used for making this certification. See MPEP § 324.

Doc Code: DISQ.E.FILE
Document Description: Electronic Terminal Disclaimer – Approved

Application No.: 18136979

Filing Date: 20-Apr-2023

Applicant/Patent under Reexamination: Telford

Electronic Terminal Disclaimer filed on August 22, 2023

☒ APPROVED

This patent is subject to a terminal disclaimer

☐ DISAPPROVED

Approved/Disapproved by: Electronic Terminal Disclaimer automatically approved by EFS-Web

U.S. Patent and Trademark Office

IN THE UNITED STATES PATENT AND TRADEMARK OFFICE

Application of:	Telford, Rodney V.	Docket No.:	2877-11.15
Serial No.:	18/136,979	Group Art Unit No.:	3734
Filed:	April 20, 2023	Confirmation No.:	6273
Title:	ADJUSTABLE CHILD CARRIER	Examiner:	HELVEY, Peter N.

Mail Stop Amendment
Commissioner for Patents
P.O. Box 1450
Alexandria, VA 22313-1450

AMENDMENT AND RESPONSE

In response to the Non-final Office Action dated August 7, 2023, Applicant requests amendment and reconsideration of the above-captioned application.

Amendments to the Specification begin on page 2 of this paper.

Amendments to the Claims begin on page 5 of this paper.

Remarks begin on page 16 of this paper.

Amendments to the Specification:

Applicant respectfully requests amendment to ¶¶ [0018], [0055], [0070], and [0086] of the specification to correct typographical errors.

Please replace ¶ [0010] with the following amended paragraph:

[0010] According to one embodiment, a child carrier includes a waist belt adapted for securing about a wearer's hips and a main body coupled to the waist belt, where the main body is adapted to form a child carrying area in cooperation with a wearer's torso. The main body can include a torso support portion configured for supporting at least the torso of a child; and an adjustable bucket seat configurable in a plurality of bucket seat configurations, each of the plurality of bucket seat configurations having a different bucket seat depth and bucket seat width and adapted to support a child in a corresponding size range in a spread squat position. In one embodiment, the plurality of bucket seat configurations comprises a configuration adapted to support an infant in a spread squat position without an infant insert. The plurality of bucket seat configurations may include a configuration adapted to support a toddler in a spread squat position.

Please replace ¶ [0018] with the following amended paragraph:

[0018] According to one embodiment, a method of configuring a child carrier can comprise: for a child to be carried, adjusting a bucket seat of the child carrier to a child's size and positioning the child in a child carrying area of the child carrier such that the child is supported in an ergonomic spread squat position. Adjusting the bucket seat to the child's size can include configuring a depth of the bucket seat by coupling base width adjusters of the child carrier to a waist belt of the child carrier at positions for a base width setting corresponding to the child's size and adjusting thigh width adapters to adjust a width of the bucket seat. Configuring the depth of the bucket seat may further comprise rotating the base width adjusters to open or close darts. The method may further include configuring an adjustable neck support to fill a portion of the child carrying area and support a child's neck.

Please replace ¶ [0050] with the following amended paragraph:

[0050] The carrier of certain embodiments may also be configured to adjust in height. In certain embodiments, the length of the physical carrier from the top edge of the waist belt at the center to the top edge of carrier at the center remains consistent, however, the wearable height changes depending on the setting of the bucket seat size. With the base width at its smallest/narrowest

setting the bucket seat is deeper consuming more of the carrier length measurement, thus leaving less measurement for the wearable height while with the base width at ~~is~~ its largest/widest setting the bucket seat is shallow consuming less of the carrier length measurement, thus leaving more measurement for the wearable height.

Please replace ¶ [0055] with the following amended paragraph:

[0055] In one embodiment, the carrier can be adapted to support the child in a position with the child's femur approximately 90° to 120° (or other elevated position) from the coronal plane and to position the child's knees with an amount of spreading. The amount of spreading may depend on the developmental stage of the child and orientation with a newborn having less than 30°, then approximately 30°, then approximately 35°-40° and so on ~~so~~, such that the final spread is approximately 40°-45°, though other amounts of spreading may be achieved including (e.g., for example approximately 55°). In one embodiment, the spreading may be at least 20° degrees from the median plane. The child's weight can be distributed across the child's bottom, thighs and back so that the sacrum does not bear too much weight and the child can rest with a more naturally curved "C" spine in a spread squat position that is believed to be better for pelvic development. It can be noted, however, that the child can be positioned in any comfortable position, preferably emphasizing a supportive posture rather than a posture where the child is primarily sitting on his or her sacrum.

Please replace ¶ [0070] with the following amended paragraph:

[0070] Referring to FIG. 3C, the base width adjusters 150 are secured at positions 158 corresponding to a maximum (or widest) base width setting. In this configuration, the laterally inner edges 146, 148 are rotated away from the respective laterally outer edges 126, ~~148~~ 128 of FIG. 3C. In other words, the dart legs are opened to release the darts and create less shape (curve) at the end of the gusset portions 170. By fastening base width adjusters 150 to waist belt 115 such that they are maximally distal one another (again, given the range of possible setting for coupling base width adjusters 150 to waist belt 115), tension may be maintained on outer edges of gusset portions 170 such that gusset portions 170 remain relatively flat. As such, bucket seat portion 120 may be maintained in a relatively flat or less shaped configuration, serving to minimize the depth of the bucket seat 125.

BabyBjőrn AB, Exhibit 1002
BabyBjőrn AB v. The Ergo Baby Carrier, Inc.
IPR2025-00111, Page 71 of 112

Please replace ¶ [0086] with the following amended paragraph:

[0086] FIGS. 7A, 7B and 7C illustrate one embodiment of adjustable neck support 180 in an inside folded down configuration, an extended configuration and an outside folded down configuration respectively. In the inside folded down position of FIG. 7A, adjustable neck support 180 can be adapted to partially fill the inside of the carrying area of carrier 100 to give infants with insufficient head control more head and neck support (see also FIG. 6A). Adjustable neck support 180 can also be configured in the outside folded down configuration of FIG. ~~7B~~ 7C to provide additional volume in the carrier as the child grows (see also FIGS. 6B and 6C). Neck support 180 can be configured in the extended mode (flipped up) as illustrated in FIG. ~~7C~~ 7B to increase the center back length, giving additional back support for toddlers or head and neck support for non-infant babies. Neck support 180 may be positioned according to the size of the child, or other criteria.

BabyBjőrn AB, Exhibit 1002
BabyBjőrn AB v. The Ergo Baby Carrier, Inc.
IPR2025-00111, Page 72 of 112

Amendments to the Claims:

This listing of the claims will replace all prior versions, and listings, of claims in the application.

Listing of the Claims

1. (Cancelled)

2. (Currently Amended) An adjustable child carrier for supporting a child by a user, the adjustable child carrier comprising:

a body configured to support the child,

wherein the body forms a bucket seat configured to support legs of the child;

a neck support comprising a first neck support attachment and a second neck support attachment;

a first shoulder strap coupled to the body and configured to extend over a first shoulder of the user;

a second shoulder strap coupled to the body and configured to extend over a second shoulder of the user;

a first attachment disposed on the first shoulder strap and configured to receive the first neck support attachment;

a second attachment disposed on the second shoulder strap and configured to receive the second neck support attachment,

wherein the neck support is configured in an upward neck supporting position when the first neck support attachment is coupled to the first attachment and the second neck support attachment is coupled to the second attachment;

the body forming a first thigh support and a second thigh support;

a first setting, a second setting, and a third setting defined by the adjustable child carrier; and

at least one thigh support adjuster coupled to the first thigh support and the second thigh support,

wherein ~~adjustment of~~ the at least one thigh support adjuster is configured to be selectively positioned to one of the first setting, the second setting, or the third setting to

BabyBjőrn AB, Exhibit 1002
BabyBjőrn AB v. The Ergo Baby Carrier, Inc.
IPR2025-00111, Page 73 of 112

thereby adjust[[s]] a ~~width~~ length of the body to accommodate various sizes of the child as the child ages,

wherein the length is defined from a bottom of the bucket seat to a top of the body.

3. (Currently Amended) The adjustable child carrier of claim 2, ~~wherein the body forming the first thigh support and the second thigh support forms a seat for the child~~

wherein selectively positioning the at least one thigh support adjuster at the first setting adjusts the length of the body to a first length,

wherein selectively positioning the at least one thigh support adjuster at the second setting adjusts the length of the body to a second length greater than the first length,

wherein selectively positioning the at least one thigh support adjuster at the third setting adjusts the length of the body to a third length greater than the second length.

4. (Currently Amended) The adjustable child carrier of claim [[3]] 2, wherein adjustment of the at least one thigh support adjuster ~~further~~ adjusts a depth of the bucket seat for the child.

5. (Currently Amended) The adjustable child carrier of claim [[4]] 2, ~~further comprising indicia indicating a position for the at least one thigh support adjuster to be positioned to support various child sizes in the seat~~

wherein the first setting is at least partially vertically displaced from the second setting, the second setting is at least partially vertically displaced from the third setting, and the first setting is at least partially vertically displaced from the first setting,

wherein the adjustable child carrier defines the second setting between the first setting and the third setting.

6. (Cancelled)

7. (Cancelled)

8. (Currently Amended) The adjustable child carrier of claim [[2]] 3, ~~further comprising an upper support portion configured to support an upper body of the child between a torso of the user while the child is in the adjustable child carrier~~

wherein adjusting the length of the body to the first length configures the adjustable child carrier in an infant mode,

wherein, in the infant mode, the adjustable child carrier is configured to carry the child when the child has a height within a range of 20-24 inches.

9. (Currently Amended) An adjustable child carrier for supporting a child by a user, the adjustable child carrier comprising:

a body configured to support the child between the body and a torso of the user, wherein the body forms a bucket seat configured to support legs of the child;

a neck support comprising a first neck support attachment and a second neck support attachment;

a first shoulder strap coupled to the body and configured to extend over a first shoulder of the user;

a second shoulder strap coupled to the body and configured to extend over a second shoulder of the user;

a first attachment disposed on the first shoulder strap and configured to receive the first neck support attachment;

a second attachment disposed on the second shoulder strap and configured to receive the second neck support attachment,

wherein the neck support is configured in an upward neck supporting position when the first neck support attachment is coupled to the first attachment and the second neck support attachment is coupled to the second attachment;

the body forming a first thigh support and a second thigh support; [[and]]

at least one thigh support adjuster coupled to the first thigh support and the second thigh support[[,]]; and

a first position, a second position, and a third position defined by the adjustable child carrier,

wherein the first position corresponds to a first setting, the second position corresponds to a second setting, and the third position corresponds to a third setting,

wherein adjustment of the at least one thigh support adjuster among the first position, the second position, and the third position adjusts a length ~~and a width~~ of the body to configure the adjustable child carrier to one of the first setting, the second setting, or the third setting, the length defined from a bottom of the bucket seat to a top of the body.

10. (Cancelled)

11. (Currently Amended) The adjustable child carrier of claim [[10]] 9, ~~wherein the body forming the first thigh support and the second thigh support forms a seat for the child~~

wherein adjustment of the at least one thigh support adjuster from the first position to the second position adjusts the length of the body from a first length to a second length, the second length being greater than the first length,

wherein adjustment of the at least one thigh support adjuster from the second position to the third position adjusts the length of the body from the second length to a third length, the third length being greater than the first length and the second length.

12. (Currently Amended) The adjustable child carrier of claim [[11]] 9, wherein adjustment of the at least one thigh support adjuster ~~further~~ adjusts a depth of the bucket seat for the child.

13. (Currently Amended) The adjustable child carrier of claim [[12]] 9, ~~further comprising indicia indicating a position for the at least one thigh support adjuster to be positioned to support various child sizes in the seat~~

wherein the first position is at least partially vertically displaced from the second position, the second position is at least partially vertically displaced from the third position, and the first position is at least partially vertically displaced from the first position,

wherein the adjustable child carrier defines the second position between the first position and the third position.

14. (Cancelled)

15. (Currently Amended) The adjustable child carrier of claim [[9]] 11, ~~further comprising an upper support portion configured to support an upper body of the child while in the adjustable child carrier~~

wherein adjusting the length of the body to the first length configures the adjustable child carrier in an infant mode,

wherein, in the infant mode, the adjustable child carrier is configured to carry the child when the child has a height within a range of 20-24 inches.

16. (Currently Amended) An adjustable child carrier for supporting a child by a user, the adjustable child carrier comprising:

a body configured to support the child,

wherein the body forms a bucket seat configured to support legs of the child;

a neck support comprising a first neck support attachment and a second neck support attachment;

a first shoulder strap coupled to the body and configured to extend over a first shoulder of the user;

a second shoulder strap coupled to the body and configured to extend over a second shoulder of the user;

a first attachment disposed on the first shoulder strap and configured to receive the first neck support attachment;

a second attachment disposed on the second shoulder strap and configured to receive the second neck support attachment,

wherein the neck support is configured in an upward neck supporting position when the first neck support attachment is coupled to the first attachment and the second neck support attachment is coupled to the second attachment;

~~a third attachment disposed on the body and configured to receive the first neck support attachment; and~~

~~a fourth attachment disposed on the body and configured to receive the second neck support attachment~~,

wherein folding the neck support down and away from the user configures the neck support in an outside folded down position, the outside folded down position reducing a length of the body in relation to the upward neck supporting position; ~~is configured in a downward position when the first neck support attachment is coupled to the third attachment and the second neck support attachment is coupled to the fourth attachment.~~

the body forming a first thigh support and a second thigh support;

wherein the body, the first thigh support, and the second thigh support in combination form a seat for the child; [[and]]

a first setting, a second setting, and a third setting defined by the adjustable child carrier; and

at least one thigh support adjuster coupled to the first thigh support and the second thigh support,

wherein ~~adjustment of~~ selective positioning of the at least one thigh support adjuster at the first setting, the second setting, or the third setting adjusts ~~a width~~ the length of the body to accommodate various sizes of the child as the child ages, the length defined from a bottom of the bucket seat to a top of the body.

17. (Cancelled)

18. (Currently Amended) The adjustable child carrier of claim 16, wherein adjustment of the at least one thigh support adjuster ~~further~~ adjusts a depth of the bucket seat for the child.

19. (Currently Amended) The adjustable child carrier of claim 16, ~~further comprising indicia indicating a position for the at least one thigh support adjuster to be positioned to support various child sizes in the seat~~

wherein the first setting is at least partially vertically displaced from the second setting, the second setting is at least partially vertically displaced from the third setting, and the first setting is at least partially vertically displaced from the first setting,

wherein the adjustable child carrier defines the second setting between the first setting and the third setting.

20. (Currently Amended) The adjustable child carrier of claim 16, ~~further comprising an upper support portion configured to support an upper body of the child between a torso of the user while the child is in the adjustable child carrier~~

wherein selectively positioning the at least one thigh support adjuster at the first setting adjusts the length of the body to a first length,

wherein selectively positioning the at least one thigh support adjuster at the second setting adjusts the length of the body to a second length greater than the first length,

wherein selectively positioning the at least one thigh support adjuster at the third setting adjusts the length of the body to a third length greater than the second length.

21. (Previously Presented) The adjustable child carrier of claim 16, wherein the seat is configured to support the child in a spread squat position.

22. (New) The adjustable child carrier of claim 2,

wherein positioning the at least one thigh support adjuster at the second setting at least partially obscures the first setting,

wherein positioning the at least one thigh support adjuster at the third setting at least partially obscures the second setting.

23. (New) The adjustable child carrier of claim 9,

wherein adjustment of the at least one thigh support adjuster to the second position at least partially obscures the first position and adjustment of the at least one thigh support adjuster to the third position at least partially obscures the second position.

24. (New) The adjustable child carrier of claim 16,

wherein positioning the at least one thigh support adjuster at the second setting at least partially obscures the first setting and positioning the at least one thigh support adjuster at the third setting at least partially obscures the second setting.

25. (New) The adjustable child carrier of claim 2, wherein the bucket seat is configured to support the child in a spread squat position.

26. (New) The adjustable child carrier of claim 9, wherein the bucket seat is configured to support the child in a spread squat position.

27. (New) The adjustable child carrier of claim 8,

wherein adjusting the length of the body to the third length configures the adjustable child carrier in a toddler mode,

wherein, in the toddler mode, the adjustable child carrier is configured to carry the child when the child has a height of at least 28 inches.

28. (New) The adjustable child carrier of claim 15,

wherein adjusting the length of the body to the third length configures the adjustable child carrier in a toddler mode,

wherein, in the toddler mode, the adjustable child carrier is configured to carry the child when the child has a height of at least 28 inches.

29. (New) The adjustable child carrier of claim 20,

wherein adjusting the length of the body to the first length configures the adjustable child carrier in an infant mode,

wherein, in the infant mode, the adjustable child carrier is configured to carry the child when the child has a height within a range of 20-24 inches.

30. (New) The adjustable child carrier of claim 29,

wherein adjusting the length of the body to the third length configures the adjustable child carrier in a toddler mode,

wherein, in the toddler mode, the adjustable child carrier is configured to carry the child when the child has a height of at least 28 inches.

31. (New) The adjustable child carrier of claim 2,

wherein each of the first setting, the second setting, and the third setting is a discrete location on the child carrier at which the user selectively positions the at least one thigh support adjuster.

32. (New) The adjustable child carrier of claim 9,

wherein each of the first position, second position, and third position is a discrete location on the child carrier at which the user adjusts the at least one thigh support adjuster to the first setting, the second setting, and the third setting.

BabyBjőrn AB, Exhibit 1002
BabyBjőrn AB v. The Ergo Baby Carrier, Inc.
IPR2025-00111, Page 82 of 112

33. (New) The adjustable child carrier of claim 16,

wherein each of the first setting, the second setting, and the third setting is a discrete location on the child carrier at which the user selectively positions the at least one thigh support adjuster.

34. (New) The adjustable child carrier of claim 2,

wherein each of the first setting, the second setting, and the third setting is visible to the user for the selective positioning of the at least one thigh support adjuster.

35. (New) The adjustable child carrier of claim 9,

wherein each of the first position, the second position, and the third position is visible to the user for the adjustment of the at least one thigh support adjuster.

36. (New) The adjustable child carrier of claim 16,

wherein each of the first setting, the second setting, and the third setting is visible to the user for the selective positioning of the at least one thigh support adjuster.

BabyBjőrn AB, Exhibit 1002
BabyBjőrn AB v. The Ergo Baby Carrier, Inc.
IPR2025-00111, Page 83 of 112

Remarks:

Claims 2-5, 8-9, 11-13, 15-16, and 18-36 are pending, with claims 2, 9, and 16 being independent. Claims 2-5, 8-9, 11-13, 15-16, and 18-20 are amended. Claims 6-7, 10, 14, and 17 have been cancelled herein without prejudice or disclaimer. New claims 22-36 have been added. Claim 1 was previously cancelled without prejudice or disclaimer. No new matter is added. Support for these claim amendments and new claims can be found at least at ¶¶ [0005], [0010], [0017-0019], [0022], [0044], [0050-0051], [0054], [0056-0057], [0067-0068], [0077-0080], [0082-0088], Figs. 2A, 3A-3C 6A-6C, and 7A-7C of the specification. Applicant respectfully requests reconsideration of the present application, in light of the above amendments and the present remarks.

Interview Summary

A telephonic interview was held between Examiner Helvey and Applicant's representatives, Jennifer Bailey (Reg. No. 52,583) and Virginia Brown (Reg. No. 80,538) on August 16, 2023. The Examiner indicated filing a terminal disclaimer with the claims, as presented, would make the claims allowable. Applicants appreciate the Examiner's time and consideration extended during the interview.

Claim Amendments

Independent claims 2, 9, and 16 have been amended to claim the thigh support adjusters adjusting a "length of the body to accommodate various sizes of the child as the child ages," with the length being defined from the bottom of the bucket seat of the body to the top of the body. Applicant's amendments are not outside of the scope of the pending claims, because claim 9 already claimed the thigh support adjuster adjusting a length of the body. Additionally, the Instant Application supports the thigh support adjusters adjusting a length of the body, with the length defined from the bottom of the bucket seat to the top of the body. Instant Application at [0019], [0044], [0054], [0077-0078].

Additionally, Independent claims 2, 9, and 16 have been amended to claim a first, second, and third setting (or "position") defined by the adjustable child carrier. Positioning or adjustment of the thigh support adjuster among the first, second, and third settings adjusts the length of the

BabyBjőrn AB, Exhibit 1002
BabyBjőrn AB v. The Ergo Baby Carrier, Inc.
IPR2025-00111, Page 84 of 112

body. The first, second, and third settings defined by the adjustable child carrier are supported at [0067-0068] and Figs. 2A and 3A-3C of the Instant Application.

Applicant has amended Independent claim 16 to include the limitations of claim 2 (as amended) and the additional limitations of the neck support folding downward and away from the user to configure the neck support in an outside folded down position, with the outside folded down position reducing the length of the body in relation to the upward neck supporting position. Support for the additional limitations of Independent claim 16 can be found at least at [0086] and Fig. 7C of the Instant Application. Applicant's amendments are not outside the scope of the pending claims, because the amendments narrow the downward position of the neck support by further claiming how the neck support is configured to the down position and how the down position of the neck support affects the length of the body.

Double Patenting

Claims 2-21 are rejected on the ground of non-statutory double patenting as being unpatentable over claims 1-20 of U.S. Patent No. 10,426,275; claims 1-20 of U.S. Patent No. 11,051,634; and claims 1-20 of U.S. Patent No. 11,583,104. A Terminal Disclaimer is submitted herewith to overcome these rejections. Therefore, Applicant respectfully requests withdrawal of the double patenting rejections.

Conclusion

Applicant submits that claims 2-5, 8-9, 11-13, 15-16, and 18-36, as amended, are in allowable condition and requests a corresponding Notice of Allowance. Any additional fee that might be due in connection with this application should be applied against Deposit Account No. 50-6159.

Respectfully submitted,

ERISE IP, P.A.

By: /Jennifer C. Bailey/
Jennifer C. Bailey; Reg. No. 52,583
7015 College Blvd., Ste. 700
Overland Park, KS 66211
(913) 777-5600

BabyBjőrn AB, Exhibit 1002
BabyBjőrn AB v. The Ergo Baby Carrier, Inc.
IPR2025-00111, Page 85 of 112

ATTORNEYS FOR APPLICANT
(Docket No. 2877-11.15)

UNITED STATES PATENT AND TRADEMARK OFFICE

UNITED STATES DEPARTMENT OF COMMERCE
United States Patent and Trademark Office
Address: COMMISSIONER FOR PATENTS
P.O. Box 1450
Alexandria, Virginia 22313-1450
www.uspto.gov

NOTICE OF ALLOWANCE AND FEE(S) DUE

118925 7590 08/31/2023
Erise IP, P.A.
7015 College Blvd., Ste 700
Overland Park, KS 66211

EXAMINER
HELVEY, PETER N.

ART UNIT	PAPER NUMBER
3734	

DATE MAILED: 08/31/2023

APPLICATION NO.	FILING DATE	FIRST NAMED INVENTOR	ATTORNEY DOCKET NO.	CONFIRMATION NO.
18/136,979	04/20/2023	Rodney V. Telford	2877-11.15	6273

TITLE OF INVENTION: ADJUSTABLE CHILD CARRIER

APPLN. TYPE	ENTITY STATUS	ISSUE FEE DUE	PUBLICATION FEE DUE	PREV. PAID ISSUE FEE	TOTAL FEE(S) DUE	DATE DUE
nonprovisional	UNDISCOUNTED	$1200	$0.00	$0.00	$1200	11/30/2023

THE APPLICATION IDENTIFIED ABOVE HAS BEEN EXAMINED AND IS ALLOWED FOR ISSUANCE AS A PATENT. PROSECUTION ON THE MERITS IS CLOSED. THIS NOTICE OF ALLOWANCE IS NOT A GRANT OF PATENT RIGHTS. THIS APPLICATION IS SUBJECT TO WITHDRAWAL FROM ISSUE AT THE INITIATIVE OF THE OFFICE OR UPON PETITION BY THE APPLICANT. SEE 37 CFR 1.313 AND MPEP 1308.

THE ISSUE FEE AND PUBLICATION FEE (IF REQUIRED) MUST BE PAID WITHIN THREE MONTHS FROM THE MAILING DATE OF THIS NOTICE OR THIS APPLICATION SHALL BE REGARDED AS ABANDONED. THIS STATUTORY PERIOD CANNOT BE EXTENDED. SEE 35 U.S.C. 151. THE ISSUE FEE DUE INDICATED ABOVE DOES NOT REFLECT A CREDIT FOR ANY PREVIOUSLY PAID ISSUE FEE IN THIS APPLICATION. IF AN ISSUE FEE HAS PREVIOUSLY BEEN PAID IN THIS APPLICATION (AS SHOWN ABOVE), THE RETURN OF PART B OF THIS FORM WILL BE CONSIDERED A REQUEST TO REAPPLY THE PREVIOUSLY PAID ISSUE FEE TOWARD THE ISSUE FEE NOW DUE.

HOW TO REPLY TO THIS NOTICE:

I. Review the ENTITY STATUS shown above. If the ENTITY STATUS is shown as SMALL or MICRO, verify whether entitlement to that entity status still applies.

If the ENTITY STATUS is the same as shown above, pay the TOTAL FEE(S) DUE shown above.

If the ENTITY STATUS is changed from that shown above, on PART B - FEE(S) TRANSMITTAL, complete section number 5 titled "Change in Entity Status (from status indicated above)".

For purposes of this notice, small entity fees are 40% the amount of undiscounted fees, and micro entity fees are 20% the amount of undiscounted fees.

II. PART B - FEE(S) TRANSMITTAL, or its equivalent, must be completed and returned to the United States Patent and Trademark Office (USPTO) with your ISSUE FEE and PUBLICATION FEE (if required). If you are charging the fee(s) to your deposit account, section "4b" of Part B - Fee(s) Transmittal should be completed. If an equivalent of Part B is filed, a request to reapply a previously paid issue fee must be clearly made, and delays in processing may occur due to the difficulty in recognizing the paper as an equivalent of Part B.

III. All communications regarding this application must give the application number. Please direct all communications prior to issuance to Mail Stop ISSUE FEE unless advised to the contrary.

IMPORTANT REMINDER: Maintenance fees are due in utility patents issuing on applications filed on or after Dec. 12, 1980. It is patentee's responsibility to ensure timely payment of maintenance fees when due. More information is available at www.uspto.gov/PatentMaintenanceFees.

BabyBjőrn AB, Exhibit 1002
BabyBjőrn AB v. The Ergo Baby Carrier, Inc.
IPR2025-00111, Page 87 of 112

PART B - FEE(S) TRANSMITTAL

Complete and send this form, together with applicable fee(s), by mail or fax, or via EFS-Web.

By mail, send to: Mail Stop ISSUE FEE
Commissioner for Patents
P.O. Box 1450
Alexandria, Virginia 22313-1450

By fax, send to: (571)-273-2885

INSTRUCTIONS: This form should be used for transmitting the ISSUE FEE and PUBLICATION FEE (if required). Blocks 1 through 5 should be completed where appropriate. All further correspondence will be mailed to the current correspondence address as indicated unless corrected below or directed otherwise in Block 1, by (a) specifying a new correspondence address; and/or (b) indicating a separate "FEE ADDRESS" for maintenance fee notifications. **Because electronic patent issuance may occur shortly after issue fee payment, any desired continuing application should preferably be filed prior to payment of this issue fee in order not to jeopardize copendency.**

CURRENT CORRESPONDENCE ADDRESS (Note: Use Block 1 for any change of address)

118925 7590 08/31/2023
Erise IP, P.A.
7015 College Blvd., Ste 700
Overland Park, KS 66211

Note: A certificate of mailing can only be used for domestic mailings of the Fee(s) Transmittal. This certificate cannot be used for any other accompanying papers. Each additional paper, such as an assignment or formal drawing, must have its own certificate of mailing or transmission.

Certificate of Mailing or Transmission

I hereby certify that this Fee(s) Transmittal is being deposited with the United States Postal Service with sufficient postage for first class mail in an envelope addressed to the Mail Stop ISSUE FEE address above, or being transmitted to the USPTO via EFS-Web or by facsimile to (571) 273-2885, on the date below.

(Typed or printed name)

(Signature)

(Date)

APPLICATION NO.	FILING DATE	FIRST NAMED INVENTOR	ATTORNEY DOCKET NO.	CONFIRMATION NO.
18/136,979	04/20/2023	Rodney V. Telford	2877-11.15	6273

TITLE OF INVENTION: ADJUSTABLE CHILD CARRIER

APPLN. TYPE	ENTITY STATUS	ISSUE FEE DUE	PUBLICATION FEE DUE	PREV. PAID ISSUE FEE	TOTAL FEE(S) DUE	DATE DUE
nonprovisional	UNDISCOUNTED	$1200	$0.00	$0.00	$1200	11/30/2023

EXAMINER	ART UNIT	CLASS-SUBCLASS
HELVEY, PETER N.	3734	224-159000

1. Change of correspondence address or indication of "Fee Address" (37 CFR 1.363).

❑ Change of correspondence address (or Change of Correspondence Address form PTO/AIA/122 or PTO/SB/122) attached.

❑ "Fee Address" indication (or "Fee Address" Indication form PTO/AIA/47 or PTO/SB/47; Rev 03-02 or more recent) attached. **Use of a Customer Number is required.**

2. For printing on the patent front page, list
(1) The names of up to 3 registered patent attorneys or agents OR, alternatively,
(2) The name of a single firm (having as a member a registered attorney or agent) and the names of up to 2 registered patent attorneys or agents. If no name is listed, no name will be printed.

1_____
2_____
3_____

3. ASSIGNEE NAME AND RESIDENCE DATA TO BE PRINTED ON THE PATENT (print or type)

PLEASE NOTE: Unless an assignee is identified below, no assignee data will appear on the patent. If an assignee is identified below, the document must have been previously recorded, or filed for recordation, as set forth in 37 CFR 3.11 and 37 CFR 3.81(a). Completion of this form is NOT a substitute for filing an assignment.

(A) NAME OF ASSIGNEE (B) RESIDENCE: (CITY and STATE OR COUNTRY)

Please check the appropriate assignee category or categories (will not be printed on the patent) : ❑ Individual ❑ Corporation or other private group entity ❑ Government

4a. Fees submitted: ❑Issue Fee ❑Publication Fee (if required)

4b. Method of Payment: *(Please first reapply any previously paid fee shown above)*

❑ Electronic Payment via Patent Center or EFS-Web ❑ Enclosed check ❑ Non-electronic payment by credit card (Attach form PTO-2038)

❑ The Director is hereby authorized to charge the required fee(s), any deficiency, or credit any overpayment to Deposit Account No. _____

5. **Change in Entity Status** (from status indicated above)

❑ Applicant certifying micro entity status. See 37 CFR 1.29

NOTE: Absent a valid certification of Micro Entity Status (see forms PTO/SB/15A and 15B), issue fee payment in the micro entity amount will not be accepted at the risk of application abandonment.

❑ Applicant asserting small entity status. See 37 CFR 1.27

NOTE: If the application was previously under micro entity status, checking this box will be taken to be a notification of loss of entitlement to micro entity status.

❑ Applicant changing to regular undiscounted fee status.

NOTE: Checking this box will be taken to be a notification of loss of entitlement to small or micro entity status, as applicable.

NOTE: This form must be signed in accordance with 37 CFR 1.31 and 1.33. See 37 CFR 1.4 for signature requirements and certifications.

Authorized Signature _____ Date _____

Typed or printed name _____ Registration No. _____

BabyBjörn AB, Exhibit 1002
BabyBjörn AB v. The Ergo Baby Carrier, Inc.
IPR2025-00111, Page 88 of 112

UNITED STATES DEPARTMENT OF COMMERCE
United States Patent and Trademark Office
Address: COMMISSIONER FOR PATENTS
P.O. Box 1450
Alexandria, Virginia 22313-1450
www.uspto.gov

APPLICATION NO.	FILING DATE	FIRST NAMED INVENTOR	ATTORNEY DOCKET NO.	CONFIRMATION NO.
18/136,979	04/20/2023	Rodney V. Telford	2877-11.15	6273

118925 7590 08/31/2023
Erise IP, P.A.
7015 College Blvd., Ste 700
Overland Park, KS 66211

EXAMINER
HELVEY, PETER N.

ART UNIT	PAPER NUMBER
3734	

DATE MAILED: 08/31/2023

Determination of Patent Term Adjustment under 35 U.S.C. 154 (b)
(Applications filed on or after May 29, 2000)

The Office has discontinued providing a Patent Term Adjustment (PTA) calculation with the Notice of Allowance.

Section 1(h)(2) of the AIA Technical Corrections Act amended 35 U.S.C. 154(b)(3)(B)(i) to eliminate the requirement that the Office provide a patent term adjustment determination with the notice of allowance. See Revisions to Patent Term Adjustment, 78 Fed. Reg. 19416, 19417 (Apr. 1, 2013). Therefore, the Office is no longer providing an initial patent term adjustment determination with the notice of allowance. The Office will continue to provide a patent term adjustment determination with the Issue Notification Letter that is mailed to applicant approximately three weeks prior to the issue date of the patent, and will include the patent term adjustment on the patent. Any request for reconsideration of the patent term adjustment determination (or reinstatement of patent term adjustment) should follow the process outlined in 37 CFR 1.705.

Any questions regarding the Patent Term Extension or Adjustment determination should be directed to the Office of Patent Legal Administration at (571)-272-7702. Questions relating to issue and publication fee payments should be directed to the Customer Service Center of the Office of Patent Publication at 1-(888)-786-0101 or (571)-272-4200.

OMB Clearance and PRA Burden Statement for PTOL-85 Part B

The Paperwork Reduction Act (PRA) of 1995 requires Federal agencies to obtain Office of Management and Budget approval before requesting most types of information from the public. When OMB approves an agency request to collect information from the public, OMB (i) provides a valid OMB Control Number and expiration date for the agency to display on the instrument that will be used to collect the information and (ii) requires the agency to inform the public about the OMB Control Number's legal significance in accordance with 5 CFR 1320.5(b).

The information collected by PTOL-85 Part B is required by 37 CFR 1.311. The information is required to obtain or retain a benefit by the public which is to file (and by the USPTO to process) an application. Confidentiality is governed by 35 U.S.C. 122 and 37 CFR 1.14. This collection is estimated to take 30 minutes to complete, including gathering, preparing, and submitting the completed application form to the USPTO. Time will vary depending upon the individual case. Any comments on the amount of time you require to complete this form and/or suggestions for reducing this burden, should be sent to the Chief Information Officer, U.S. Patent and Trademark Office, U.S. Department of Commerce, P.O. Box 1450, Alexandria, Virginia 22313-1450. DO NOT SEND FEES OR COMPLETED FORMS TO THIS ADDRESS. SEND TO: Commissioner for Patents, P.O. Box 1450, Alexandria, Virginia 22313-1450. Under the Paperwork Reduction Act of 1995, no persons are required to respond to a collection of information unless it displays a valid OMB control number.

Privacy Act Statement

The Privacy Act of 1974 (P.L. 93-579) requires that you be given certain information in connection with your submission of the attached form related to a patent application or patent. Accordingly, pursuant to the requirements of the Act, please be advised that: (1) the general authority for the collection of this information is 35 U.S.C. 2(b)(2); (2) furnishing of the information solicited is voluntary; and (3) the principal purpose for which the information is used by the U.S. Patent and Trademark Office is to process and/or examine your submission related to a patent application or patent. If you do not furnish the requested information, the U.S. Patent and Trademark Office may not be able to process and/or examine your submission, which may result in termination of proceedings or abandonment of the application or expiration of the patent.

The information provided by you in this form will be subject to the following routine uses:

1. The information on this form will be treated confidentially to the extent allowed under the Freedom of Information Act (5 U.S.C. 552) and the Privacy Act (5 U.S.C 552a). Records from this system of records may be disclosed to the Department of Justice to determine whether disclosure of these records is required by the Freedom of Information Act.
2. A record from this system of records may be disclosed, as a routine use, in the course of presenting evidence to a court, magistrate, or administrative tribunal, including disclosures to opposing counsel in the course of settlement negotiations.
3. A record in this system of records may be disclosed, as a routine use, to a Member of Congress submitting a request involving an individual, to whom the record pertains, when the individual has requested assistance from the Member with respect to the subject matter of the record.
4. A record in this system of records may be disclosed, as a routine use, to a contractor of the Agency having need for the information in order to perform a contract. Recipients of information shall be required to comply with the requirements of the Privacy Act of 1974, as amended, pursuant to 5 U.S.C. 552a(m).
5. A record related to an International Application filed under the Patent Cooperation Treaty in this system of records may be disclosed, as a routine use, to the International Bureau of the World Intellectual Property Organization, pursuant to the Patent Cooperation Treaty.
6. A record in this system of records may be disclosed, as a routine use, to another federal agency for purposes of National Security review (35 U.S.C. 181) and for review pursuant to the Atomic Energy Act (42 U.S.C. 218(c)).
7. A record from this system of records may be disclosed, as a routine use, to the Administrator, General Services, or his/her designee, during an inspection of records conducted by GSA as part of that agency's responsibility to recommend improvements in records management practices and programs, under authority of 44 U.S.C. 2904 and 2906. Such disclosure shall be made in accordance with the GSA regulations governing inspection of records for this purpose, and any other relevant (i.e., GSA or Commerce) directive. Such disclosure shall not be used to make determinations about individuals.
8. A record from this system of records may be disclosed, as a routine use, to the public after either publication of the application pursuant to 35 U.S.C. 122(b) or issuance of a patent pursuant to 35 U.S.C. 151. Further, a record may be disclosed, subject to the limitations of 37 CFR 1.14, as a routine use, to the public if the record was filed in an application which became abandoned or in which the proceedings were terminated and which application is referenced by either a published application, an application open to public inspection or an issued patent.
9. A record from this system of records may be disclosed, as a routine use, to a Federal, State, or local law enforcement agency, if the USPTO becomes aware of a violation or potential violation of law or regulation.

Notice of Allowability	Application No. 18/136,979	Applicant(s) Telford, Rodney V.	
	Examiner PETER N HELVEY	Art Unit 3734	AIA (FITF) Status Yes

-- The MAILING DATE of this communication appears on the cover sheet with the correspondence address--

All claims being allowable, PROSECUTION ON THE MERITS IS (OR REMAINS) CLOSED in this application. If not included herewith (or previously mailed), a Notice of Allowance (PTOL-85) or other appropriate communication will be mailed in due course. **THIS NOTICE OF ALLOWABILITY IS NOT A GRANT OF PATENT RIGHTS.** This application is subject to withdrawal from issue at the initiative of the Office or upon petition by the applicant. See 37 CFR 1.313 and MPEP 1308.

1. ☑ This communication is responsive to the amendment filed 8/23/2023.
   ☐ A declaration(s)/affidavit(s) under **37 CFR 1.130(b)** was/were filed on _____.

2. ☐ An election was made by the applicant in response to a restriction requirement set forth during the interview on _____; the restriction requirement and election have been incorporated into this action.

3. ☑ The allowed claim(s) is/are See Continuation Sheet . As a result of the allowed claim(s), you may be eligible to benefit from the **Patent Prosecution Highway** program at a participating intellectual property office for the corresponding application. For more information, please see **http://www.uspto.gov/patents/init_events/pph/index.jsp** or send an inquiry to **PPHfeedback@uspto.gov.**

4. ☐ Acknowledgment is made of a claim for foreign priority under 35 U.S.C. § 119(a)-(d) or (f).

   Certified copies:

   a) ☐ All b) ☐ Some* c) ☐ None of the:

   1. ☐ Certified copies of the priority documents have been received.
   2. ☐ Certified copies of the priority documents have been received in Application No. _____ .
   3. ☐ Copies of the certified copies of the priority documents have been received in this national stage application from the International Bureau (PCT Rule 17.2(a)).

   * Certified copies not received: _____ .

Applicant has THREE MONTHS FROM THE "MAILING DATE" of this communication to file a reply complying with the requirements noted below. Failure to timely comply will result in ABANDONMENT of this application.
THIS THREE-MONTH PERIOD IS NOT EXTENDABLE.

5. ☐ CORRECTED DRAWINGS (as "replacement sheets") must be submitted.
   ☐ including changes required by the attached Examiner's Amendment / Comment or in the Office action of Paper No./Mail Date _____ .

   Identifying indicia such as the application number (see 37 CFR 1.84(c)) should be written on the drawings in the front (not the back) of each sheet. Replacement sheet(s) should be labeled as such in the header according to 37 CFR 1.121(d).

6. ☐ DEPOSIT OF and/or INFORMATION about the deposit of BIOLOGICAL MATERIAL must be submitted. Note the attached Examiner's comment regarding REQUIREMENT FOR THE DEPOSIT OF BIOLOGICAL MATERIAL.

Attachment(s)

1. ☐ Notice of References Cited (PTO-892)
2. ☑ Information Disclosure Statements (PTO/SB/08), Paper No./Mail Date _____.
3. ☐ Examiner's Comment Regarding Requirement for Deposit of Biological Material _____.
4. ☐ Interview Summary (PTO-413), Paper No./Mail Date. _____.
5. ☐ Examiner's Amendment/Comment
6. ☐ Examiner's Statement of Reasons for Allowance
7. ☐ Other _____.

/PETER N HELVEY/
Primary Examiner, Art Unit 3734

Continuation of 3. The allowed claim(s) is/are: 2-5,8-9,11-13,15-16 and 18-36

PTO/SB/08a (01-22)
Approved for use through 05/31/2024. OMB 0651-0031
U.S. Patent and Trademark Office; U.S. DEPARTMENT OF COMMERCE
Under the Paperwork Reduction Act of 1995, no persons are required to respond to a collection of information unless it contains a valid OMB control number.

INFORMATION DISCLOSURE STATEMENT BY APPLICANT

(Not for submission under 37 CFR 1.99)

Application Number	18136979
Filing Date	2023-04-20
First Named Inventor	Rodney V. TELFORD
Art Unit	3734
Examiner Name	Peter N. HELVEY
Attorney Docket Number	2877-11.15

U.S.PATENTS Remove

Examiner Initial*	Cite No	Patent Number	Kind Code[1]	Issue Date	Name of Patentee or Applicant of cited Document	Pages,Columns,Lines where Relevant Passages or Relevant Figures Appear
	1	10433656	B2	2019-10-08	Lundh	
	2	10702074	B2	2020-07-07	NAJAFI et al.	
	3	10905252	B2	2021-02-02	FAN	
	4	11272791	B2	2022-03-15	Warner	
	5	D615750	S1	2010-05-18	Jones et al.	
	6	D632887	S1	2011-02-22	Jones et al.	
	7	11297957	B2	2022-04-12	Telford	
	8	11440444	B2	2022-09-13	Shahbandar	

ALL REFERENCES CONSIDERED EXCEPT WHERE LINED THROUGH. /PNH/

INFORMATION DISCLOSURE STATEMENT BY APPLICANT (Not for submission under 37 CFR 1.99)		
	Application Number	18136979
	Filing Date	2023-04-20
	First Named Inventor	Rodney V. TELFORD
	Art Unit	3734
	Examiner Name	Peter N. HELVEY
	Attorney Docket Number	2877-11.15

	9	11684175	B2	2023-06-27	Telford	
	10	18196539		2023-05-12	Rodney V. TELFORD	
	11	18202058		2023-05-25	Rodney V. TELFORD	
	12	10653251	B1	2020-05-19	Young	
	13	10743678	B2	2020-08-18	Salazar et al.	
	14	6073820	A	2000-06-13	Drobinski	
	15	6598771	B2	2003-07-29	Norman	

If you wish to add additional U.S. Patent citation information please click the Add button. Add

U.S.PATENT APPLICATION PUBLICATIONS Remove

Examiner Initial*	Cite No	Publication Number	Kind Code[1]	Publication Date	Name of Patentee or Applicant of cited Document	Pages,Columns,Lines where Relevant Passages or Relevant Figures Appear
	1	20070241146	A1	2007-10-18	Nyberg et al.	
	2	20120187161	A1	2012-07-26	Bergkvist	

ALL REFERENCES CONSIDERED EXCEPT WHERE LINED THROUGH. /PNH/

INFORMATION DISCLOSURE STATEMENT BY APPLICANT (Not for submission under 37 CFR 1.99)		
	Application Number	18136979
	Filing Date	2023-04-20
	First Named Inventor	Rodney V. TELFORD
	Art Unit	3734
	Examiner Name	Peter N. HELVEY
	Attorney Docket Number	2877-11.15

	3	20120187162	A1	2012-07-26	Bergkvist et al.	
	4	20140319189	A1	2014-10-30	Hoppener-Visser	
	5	20220176853	A1	2022-06-09	Shahbandar	
	6	20210393049	A1	2021-12-23	Telford	
	7	20190014920	A1	2019-01-17	Matsuyama	
	8	20190350379	A1	2019-11-21	Antunovic	
	9	20210361079	A1	2021-11-25	Salazar et al.	
	10	20030178452	A1	2003-09-25	Norman	
	11	20190075936	A1	2019-03-14	Salazar et al.	

If you wish to add additional U.S. Published Application citation information please click the Add button. Add

FOREIGN PATENT DOCUMENTS Remove

Examiner Initial*	Cite No	Foreign Document Number[3]	Country Code[2] i	Kind Code[4]	Publication Date	Name of Patentee or Applicant of cited Document	Pages,Columns,Lines where Relevant Passages or Relevant Figures Appear	T[5]

ALL REFERENCES CONSIDERED EXCEPT WHERE LINED THROUGH. /PNH/

INFORMATION DISCLOSURE STATEMENT BY APPLICANT (Not for submission under 37 CFR 1.99)		
	Application Number	18136979
	Filing Date	2023-04-20
	First Named Inventor	Rodney V. TELFORD
	Art Unit	3734
	Examiner Name	Peter N. HELVEY
	Attorney Docket Number	2877-11.15

	1	10201580	JP	A	1998-08-04	Yoshiko Doumeki		☒
	2	3160906	CA	A1	2022-11-28	SHAHBANDAR		☒
	3	106263837	CN	A	2017-01-04	Zhang		☒
	4	115399601	CN	A	2022-11-29	Shabandal		☒
	5	1591044	EP	A1	2005-11-02	Moriguchi et al.		☐
	6	4094639	EP	A1	2022-11-30	SHAHBANDAR		☒
	7	2346314	GB	A	2000-08-09	Raffo et al.		☐
	8	2005312823	JP	A	2005-11-10	Moriguchi et al.		☒
	9	3403599	JP		2003-05-06	Combi Corp		☒
	10	6130251	JP	B2	2017-05-17	Martin et al.		☒
	11	6485931	JP	B2	2019-03-20	JAKOB WIKNER et al.		☒

ALL REFERENCES CONSIDERED EXCEPT WHERE LINED THROUGH. /PNH/

INFORMATION DISCLOSURE STATEMENT BY APPLICANT (Not for submission under 37 CFR 1.99)		
	Application Number	18136979
	Filing Date	2023-04-20
	First Named Inventor	Rodney V. TELFORD
	Art Unit	3734
	Examiner Name	Peter N. HELVEY
	Attorney Docket Number	2877-11.15

	12	6530576	JP	B1	2019-06-12	JAKOB WIKNER et al.		☒
	13	101197918	KR	B1	2012-11-05	Moriguzzi et al.		☒
	14	101426751	KR	B1	2014-08-06	Kwanyoung Kim		☒
	15	20060047603	KR		2006-05-18	Moriguzzi et al.		☒
	16	12022050229	PH	B	2023-04-12	BEAN VENTURES LLC		☒
	17	104411213	CN	A	2018-01-28	ANDREN MAARTEN, et al.		☒
	18	204363531	CN	U	2015-06-03	Liu Guiqin		☒
	19	2002186543	JP	A	2002-07-02	Higuchi et al.		☒
	20	108135370	CN	A	2018-06-08	Salazar et al.		☒
	21	108244885	CN	A	2018-07-06	Salazar et al.		☒
	22	109480542	CN	A	2019-03-19	Salazar et al.		☒

ALL REFERENCES CONSIDERED EXCEPT WHERE LINED THROUGH. /PNH/

INFORMATION DISCLOSURE STATEMENT BY APPLICANT (Not for submission under 37 CFR 1.99)		
	Application Number	18136979
	Filing Date	2023-04-20
	First Named Inventor	Rodney V. TELFORD
	Art Unit	3734
	Examiner Name	Peter N. HELVEY
	Attorney Docket Number	2877-11.15

	23	109480543	CN	A	2019-03-19	Salazar et al.		☒
	24	110897429	CN	A	2020-03-24	Cotirla et al.		☒
	25	602008000939	DE		2010-05-20	Parness et al.		☐
	26	1992257	EP	A1	2008-11-19	Parness et al.		☐
	27	2012109467	WO	A1	2012-08-16	Zack		☐

If you wish to add additional Foreign Patent Document citation information please click the Add button Add

NON-PATENT LITERATURE DOCUMENTS Remove

Examiner Initials*	Cite No	Include name of the author (in CAPITAL LETTERS), title of the article (when appropriate), title of the item (book, magazine, journal, serial, symposium, catalog, etc), date, pages(s), volume-issue number(s), publisher, city and/or country where published.	T5
	1	NUNA International B.V., Cudl Clik Instructions User Manual, www.nunababy.com	
	2	Najell Rise, Baby Carrier I 0-3 years I 3 Carrying Position, https:// najell.com/p/najell-rise-jet-black	
	3	Infantino, Flip 4-in-1 Convertible Carrier Instruction Manual, 2018, www.info@Blue-box.com	
	4	Infantino, Flip 4-in-1 Convertible Carrier Instruction Manual, 2022, www.infantino.com	

ALL REFERENCES CONSIDERED EXCEPT WHERE LINED THROUGH. /PNH/

INFORMATION DISCLOSURE STATEMENT BY APPLICANT (Not for submission under 37 CFR 1.99)		
	Application Number	18136979
	Filing Date	2023-04-20
	First Named Inventor	Rodney V. TELFORD
	Art Unit	3734
	Examiner Name	Peter N. HELVEY
	Attorney Docket Number	2877-11.15

	5	Lascal M1 Carrier User Manual, ASTM F2236-16a, EN13209-2:2015, US-80006 Ver13, www.lascal.net	
	6	Meet ISARA QUICK Half Buckle Carrier, https:// www.yumpu.com/en/document/read/63362302/isara-quick-half-buckle-carrier	
	7	Apprica, Baby strap "Laclis Laclis", Baby Products Apprica Official Website September 2023, https:// www.aprica.jp/products/sling/detail/sling/laclis/, Japan	☒
	8	LUCKY Industries Co., Ltd., LUCKY 1934 LUCKY Fuwa Hug, Waist Belt Type, https://lucky-industries.jp/products/lucky1934-fuwa-hug/, Japan	☐
	9	LUCKY Industries Co., Ltd., LUCKY1934 (Lucky 1934) fuwahug Fuwahug Baby Carrier Baby Strap L4620 (from 14 days old), https:// luckybabystore.jp/products/fuwahug 2023, Japan	☒
	10	US Application 17/572,084, Final Office Action dated July 10, 2023	☐
	11	US Application 18/202,058, Non-Final Office Action dated August 14, 2023	☐

If you wish to add additional non-patent literature document citation information please click the Add button Add

EXAMINER SIGNATURE

Examiner Signature	/PETER N HELVEY/	Date Considered	08/24/2023

*EXAMINER: Initial if reference considered, whether or not citation is in conformance with MPEP 609. Draw line through a citation if not in conformance and not considered. Include copy of this form with next communication to applicant.

[1] See Kind Codes of USPTO Patent Documents at www.USPTO.GOV or MPEP 901.04. [2] Enter office that issued the document, by the two-letter code (WIPO Standard ST.3). [3] For Japanese patent documents, the indication of the year of the reign of the Emperor must precede the serial number of the patent document. [4] Kind of document by the appropriate symbols as indicated on the document under WIPO Standard ST.16 if possible. [5] Applicant is to place a check mark here if English language translation is attached.

ALL REFERENCES CONSIDERED EXCEPT WHERE LINED THROUGH. /PNH/

INFORMATION DISCLOSURE STATEMENT BY APPLICANT (Not for submission under 37 CFR 1.99)		
	Application Number	18136979
	Filing Date	2023-04-20
	First Named Inventor	Rodney V. TELFORD
	Art Unit	3734
	Examiner Name	Peter N. HELVEY
	Attorney Docket Number	2877-11.15

CERTIFICATION STATEMENT

Please see 37 CFR 1.97 and 1.98 to make the appropriate selection(s):

That each item of information contained in the information disclosure statement was first cited in any communication from a foreign patent office in a counterpart foreign application not more than three months prior to the filing of the information disclosure statement. See 37 CFR 1.97(e)(1).

OR

☐ That no item of information contained in the information disclosure statement was cited in a communication from a foreign patent office in a counterpart foreign application, and, to the knowledge of the person signing the certification after making reasonable inquiry, no item of information contained in the information disclosure statement was known to any individual designated in 37 CFR 1.56(c) more than three months prior to the filing of the information disclosure statement. See 37 CFR 1.97(e)(2).

See attached certification statement.

☒ The fee set forth in 37 CFR 1.17 (p) has been submitted herewith.

☒ A certification statement is not submitted herewith.

SIGNATURE

A signature of the applicant or representative is required in accordance with CFR 1.33, 10.18. Please see CFR 1.4(d) for the form of the signature.

Signature	/Jennifer C. Bailey/	Date (YYYY-MM-DD)	2023-08-22
Name/Print	Jennifer C. Bailey	Registration Number	52,583

This collection of information is required by 37 CFR 1.97 and 1.98. The information is required to obtain or retain a benefit by the public which is to file (and by the USPTO to process) an application. Confidentiality is governed by 35 U.S.C. 122 and 37 CFR 1.14. This collection is estimated to take 1 hour to complete, including gathering, preparing and submitting the completed application form to the USPTO. Time will vary depending upon the individual case. Any comments on the amount of time you require to complete this form and/or suggestions for reducing this burden, should be sent to the Chief Information Officer, U.S. Patent and Trademark Office, U.S. Department of Commerce, P.O. Box 1450, Alexandria, VA 22313-1450. DO NOT SEND FEES OR COMPLETED FORMS TO THIS ADDRESS. **SEND TO: Commissioner for Patents, P.O. Box 1450, Alexandria, VA 22313-1450.**

ALL REFERENCES CONSIDERED EXCEPT WHERE LINED THROUGH. /PNH/

Privacy Act Statement

The Privacy Act of 1974 (P.L. 93-579) requires that you be given certain information in connection with your submission of the attached form related to a patent application or patent. Accordingly, pursuant to the requirements of the Act, please be advised that: (1) the general authority for the collection of this information is 35 U.S.C. 2(b)(2); (2) furnishing of the information solicited is voluntary; and (3) the principal purpose for which the information is used by the U.S. Patent and Trademark Office is to process and/or examine your submission related to a patent application or patent. If you do not furnish the requested information, the U.S. Patent and Trademark Office may not be able to process and/or examine your submission, which may result in termination of proceedings or abandonment of the application or expiration of the patent.

The information provided by you in this form will be subject to the following routine uses:

1. The information on this form will be treated confidentially to the extent allowed under the Freedom of Information Act (5 U.S.C. 552) and the Privacy Act (5 U.S.C. 552a). Records from this system of records may be disclosed to the Department of Justice to determine whether the Freedom of Information Act requires disclosure of these record s.

2. A record from this system of records may be disclosed, as a routine use, in the course of presenting evidence to a court, magistrate, or administrative tribunal, including disclosures to opposing counsel in the course of settlement negotiations.

3. A record in this system of records may be disclosed, as a routine use, to a Member of Congress submitting a request involving an individual, to whom the record pertains, when the individual has requested assistance from the Member with respect to the subject matter of the record.

4. A record in this system of records may be disclosed, as a routine use, to a contractor of the Agency having need for the information in order to perform a contract. Recipients of information shall be required to comply with the requirements of the Privacy Act of 1974, as amended, pursuant to 5 U.S.C. 552a(m).

5. A record related to an International Application filed under the Patent Cooperation Treaty in this system of records may be disclosed, as a routine use, to the International Bureau of the World Intellectual Property Organization, pursuant to the Patent Cooperation Treaty.

6. A record in this system of records may be disclosed, as a routine use, to another federal agency for purposes of National Security review (35 U.S.C. 181) and for review pursuant to the Atomic Energy Act (42 U.S.C. 218(c)).

7. A record from this system of records may be disclosed, as a routine use, to the Administrator, General Services, or his/her designee, during an inspection of records conducted by GSA as part of that agency's responsibility to recommend improvements in records management practices and programs, under authority of 44 U.S.C. 2904 and 2906. Such disclosure shall be made in accordance with the GSA regulations governing inspection of records for this purpose, and any other relevant (i.e., GSA or Commerce) directive. Such disclosure shall not be used to make determinations about individuals.

8. A record from this system of records may be disclosed, as a routine use, to the public after either publication of the application pursuant to 35 U.S.C. 122(b) or issuance of a patent pursuant to 35 U.S.C. 151. Further, a record may be disclosed, subject to the limitations of 37 CFR 1.14, as a routine use, to the public if the record was filed in an application which became abandoned or in which the proceedings were terminated and which application is referenced by either a published application, an application open to public inspections or an issued patent.

9. A record from this system of records may be disclosed, as a routine use, to a Federal, State, or local law enforcement agency, if the USPTO becomes aware of a violation or potential violation of law or regulation.

PTO/SB/08a (01-22)
Approved for use through 05/31/2024. OMB 0651-0031
U.S. Patent and Trademark Office; U.S. DEPARTMENT OF COMMERCE
Under the Paperwork Reduction Act of 1995, no persons are required to respond to a collection of information unless it contains a valid OMB control number.

INFORMATION DISCLOSURE STATEMENT BY APPLICANT

(Not for submission under 37 CFR 1.99)

Application Number	18136979
Filing Date	2023-04-20
First Named Inventor	Rodney V. TELFORD
Art Unit	3734
Examiner Name	Peter N. HELVEY
Attorney Docket Number	2877-11.15

U.S.PATENTS Remove

Examiner Initial*	Cite No	Patent Number	Kind Code[1]	Issue Date	Name of Patentee or Applicant of cited Document	Pages,Columns,Lines where Relevant Passages or Relevant Figures Appear
	1					

If you wish to add additional U.S. Patent citation information please click the Add button. Add

U.S.PATENT APPLICATION PUBLICATIONS Remove

Examiner Initial*	Cite No	Publication Number	Kind Code[1]	Publication Date	Name of Patentee or Applicant of cited Document	Pages,Columns,Lines where Relevant Passages or Relevant Figures Appear
	1					

If you wish to add additional U.S. Published Application citation information please click the Add button. Add

FOREIGN PATENT DOCUMENTS Remove

Examiner Initial*	Cite No	Foreign Document Number[3]	Country Code[2] i	Kind Code[4]	Publication Date	Name of Patentee or Applicant of cited Document	Pages,Columns,Lines where Relevant Passages or Relevant Figures Appear	T[5]
	1							

If you wish to add additional Foreign Patent Document citation information please click the Add button Add

NON-PATENT LITERATURE DOCUMENTS Remove

Examiner Initials*	Cite No	Include name of the author (in CAPITAL LETTERS), title of the article (when appropriate), title of the item (book, magazine, journal, serial, symposium, catalog, etc), date, pages(s), volume-issue number(s), publisher, city and/or country where published.	T[5]

ALL REFERENCES CONSIDERED EXCEPT WHERE LINED THROUGH. /PNH/

INFORMATION DISCLOSURE STATEMENT BY APPLICANT (Not for submission under 37 CFR 1.99)		
	Application Number	18136979
	Filing Date	2023-04-20
	First Named Inventor	Rodney V. TELFORD
	Art Unit	3734
	Examiner Name	Peter N. HELVEY
	Attorney Docket Number	2877-11.15

	1	European Patent Application 16860977.4 Office Action issued March 22, 2023	
	2	European Patent Application 21180405.9 Decision to Grant issued May 11, 2023	

If you wish to add additional non-patent literature document citation information please click the Add button Add

EXAMINER SIGNATURE

Examiner Signature	/PETER N HELVEY/	Date Considered	08/24/2023

*EXAMINER: Initial if reference considered, whether or not citation is in conformance with MPEP 609. Draw line through a citation if not in conformance and not considered. Include copy of this form with next communication to applicant.

[1] See Kind Codes of USPTO Patent Documents at www.USPTO.GOV or MPEP 901.04. [2] Enter office that issued the document, by the two-letter code (WIPO Standard ST.3). [3] For Japanese patent documents, the indication of the year of the reign of the Emperor must precede the serial number of the patent document. [4] Kind of document by the appropriate symbols as indicated on the document under WIPO Standard ST.16 if possible. [5] Applicant is to place a check mark here if English language translation is attached.

ALL REFERENCES CONSIDERED EXCEPT WHERE LINED THROUGH. /PNH/

INFORMATION DISCLOSURE STATEMENT BY APPLICANT (Not for submission under 37 CFR 1.99)	Application Number	18136979
	Filing Date	2023-04-20
	First Named Inventor	Rodney V. TELFORD
	Art Unit	3734
	Examiner Name	Peter N. HELVEY
	Attorney Docket Number	2877-11.15

CERTIFICATION STATEMENT

Please see 37 CFR 1.97 and 1.98 to make the appropriate selection(s):

That each item of information contained in the information disclosure statement was first cited in any communication from a foreign patent office in a counterpart foreign application not more than three months prior to the filing of the information disclosure statement. See 37 CFR 1.97(e)(1).

OR

☐ That no item of information contained in the information disclosure statement was cited in a communication from a foreign patent office in a counterpart foreign application, and, to the knowledge of the person signing the certification after making reasonable inquiry, no item of information contained in the information disclosure statement was known to any individual designated in 37 CFR 1.56(c) more than three months prior to the filing of the information disclosure statement. See 37 CFR 1.97(e)(2).

See attached certification statement.

☒ The fee set forth in 37 CFR 1.17 (p) has been submitted herewith.

☒ A certification statement is not submitted herewith.

SIGNATURE

A signature of the applicant or representative is required in accordance with CFR 1.33, 10.18. Please see CFR 1.4(d) for the form of the signature.

Signature	/Jennifer C. Bailey/	Date (YYYY-MM-DD)	2023-08-22
Name/Print	Jennifer C. Bailey	Registration Number	52,583

This collection of information is required by 37 CFR 1.97 and 1.98. The information is required to obtain or retain a benefit by the public which is to file (and by the USPTO to process) an application. Confidentiality is governed by 35 U.S.C. 122 and 37 CFR 1.14. This collection is estimated to take 1 hour to complete, including gathering, preparing and submitting the completed application form to the USPTO. Time will vary depending upon the individual case. Any comments on the amount of time you require to complete this form and/or suggestions for reducing this burden, should be sent to the Chief Information Officer, U.S. Patent and Trademark Office, U.S. Department of Commerce, P.O. Box 1450, Alexandria, VA 22313-1450. DO NOT SEND FEES OR COMPLETED FORMS TO THIS ADDRESS. **SEND TO: Commissioner for Patents, P.O. Box 1450, Alexandria, VA 22313-1450.**

ALL REFERENCES CONSIDERED EXCEPT WHERE LINED THROUGH. /PNH/

Privacy Act Statement

The Privacy Act of 1974 (P.L. 93-579) requires that you be given certain information in connection with your submission of the attached form related to a patent application or patent. Accordingly, pursuant to the requirements of the Act, please be advised that: (1) the general authority for the collection of this information is 35 U.S.C. 2(b)(2); (2) furnishing of the information solicited is voluntary; and (3) the principal purpose for which the information is used by the U.S. Patent and Trademark Office is to process and/or examine your submission related to a patent application or patent. If you do not furnish the requested information, the U.S. Patent and Trademark Office may not be able to process and/or examine your submission, which may result in termination of proceedings or abandonment of the application or expiration of the patent.

The information provided by you in this form will be subject to the following routine uses:

1. The information on this form will be treated confidentially to the extent allowed under the Freedom of Information Act (5 U.S.C. 552) and the Privacy Act (5 U.S.C. 552a). Records from this system of records may be disclosed to the Department of Justice to determine whether the Freedom of Information Act requires disclosure of these record s.

2. A record from this system of records may be disclosed, as a routine use, in the course of presenting evidence to a court, magistrate, or administrative tribunal, including disclosures to opposing counsel in the course of settlement negotiations.

3. A record in this system of records may be disclosed, as a routine use, to a Member of Congress submitting a request involving an individual, to whom the record pertains, when the individual has requested assistance from the Member with respect to the subject matter of the record.

4. A record in this system of records may be disclosed, as a routine use, to a contractor of the Agency having need for the information in order to perform a contract. Recipients of information shall be required to comply with the requirements of the Privacy Act of 1974, as amended, pursuant to 5 U.S.C. 552a(m).

5. A record related to an International Application filed under the Patent Cooperation Treaty in this system of records may be disclosed, as a routine use, to the International Bureau of the World Intellectual Property Organization, pursuant to the Patent Cooperation Treaty.

6. A record in this system of records may be disclosed, as a routine use, to another federal agency for purposes of National Security review (35 U.S.C. 181) and for review pursuant to the Atomic Energy Act (42 U.S.C. 218(c)).

7. A record from this system of records may be disclosed, as a routine use, to the Administrator, General Services, or his/her designee, during an inspection of records conducted by GSA as part of that agency's responsibility to recommend improvements in records management practices and programs, under authority of 44 U.S.C. 2904 and 2906. Such disclosure shall be made in accordance with the GSA regulations governing inspection of records for this purpose, and any other relevant (i.e., GSA or Commerce) directive. Such disclosure shall not be used to make determinations about individuals.

8. A record from this system of records may be disclosed, as a routine use, to the public after either publication of the application pursuant to 35 U.S.C. 122(b) or issuance of a patent pursuant to 35 U.S.C. 151. Further, a record may be disclosed, subject to the limitations of 37 CFR 1.14, as a routine use, to the public if the record was filed in an application which became abandoned or in which the proceedings were terminated and which application is referenced by either a published application, an application open to public inspections or an issued patent.

9. A record from this system of records may be disclosed, as a routine use, to a Federal, State, or local law enforcement agency, if the USPTO becomes aware of a violation or potential violation of law or regulation.

ALL REFERENCES CONSIDERED EXCEPT WHERE LINED THROUGH. /EP/ 2/25/2

IN THE UNITED STATES PATENT AND TRADEMARK OFFICE

Application of:	Rodney V. Telford	Docket No.:	2877-11.15
Serial No.:	18/136,979	Confirmation No.:	6273
Filed:	April 20, 2023	Group Art Unit No.:	3734
Patent No.:	11,786,055	Customer No.:	118925
Issued:	October 17, 2023	Examiner:	Peter N. HELVEY
ADJUSTABLE CHILD CARRIER			

Commissioner of Patents
Office of Patent Publication
ATTN: Certificate of Correction Branch
P.O. Box 1450
Alexandria, VA 22313-1450

REQUEST FOR CERTIFICATE OF CORRECTION

Applicant, through its attorneys, hereby requests a Certificate of Correction. Upon review of the above-referenced issued patent (the '055 Patent), Applicant found an error listed in the attached Certificate of Correction in Claims 4, 9, 11 and 13.

Specifically, claim 11 contains an error made by the Office, as the originally-filed response recited "a body configured to support the child" (*Non-Final Office Action Response Dated August 7, 2023*, at p. 11, line 3), and the issued patent incorrectly recites "a body configured to support the." *U.S. Patent No. 11,786,055* at col. 19, line 13.

Claims 4 and 13 contain Applicant mistakes of typographical nature and/or minor character. Claims 4 and 13 of the '055 Patent recite "the **first** setting is at least partially vertically displaced from the first setting." *U.S. Patent No. 11, 786,055* at col. 18, lines 1-2; col. 19, lines 60-61. The language should read "the **third** setting is at least partially vertically displaced from the first setting."

Similarly, claim 9 of the '055 Patent recites "the **first** position is at least partially vertically displaced from the first position." *U.S. Patent No. 11, 786,055* at col. 18, lines 66-67. The language should read "the **third** position is at least partially vertically displaced from the first position."

Applicant submits these are mistakes of a typographical nature and/or minor character. The revised language does not "broaden the scope of the claim" nor "materially affect the scope or meaning of the patent." *Superior Fireplace Co. v. The Majestic Products Co.,* 270 F.3d 1358,

1375, 60 USPQ2d 1668, 1681 (Fed. Cir. 2001); MPEP 1481. The correct word "third" is immediately known by the context of the remaining limitations of claims 4, 9, and 13.

Applicant requests that the Patent Office issue a Certificate of Correction. Because the errors were made by the Applicant and Office, Applicant is submitting herewith the fee specified in 37 C.F.R. § 1.20(a). Should the Office require any additional fees, please charge Deposit Account No. 50-6159.

If there are any additional questions regarding this Request for Correction, please contact the undersigned.

Respectfully submitted,

ERISE IP, P.A.

By: /Jennifer C. Bailey/
Jennifer C. Bailey, Reg. No. 52,583
Erise IP, P.A.
7015 College Boulevard, Ste. 700
Overland Park, Kansas 66211
913-777-5641

ATTORNEYS FOR APPLICANT(S)
Docket No. 2877-11.15

BabyBjőrn AB, Exhibit 1002
BabyBjőrn AB v. The Ergo Baby Carrier, Inc.
IPR2025-00111, Page 107 of 112

PTO/SB/44 (09-07)
Approved for use through 03/31/2026. OMB 0651-0033
U.S. Patent and Trademark Office; U.S. DEPARTMENT OF COMMERCE
Under the Paperwork Reduction Act of 1995, no persons are required to respond to a collection of information unless it displays a valid OMB control number.
(Also Form PTO-1050)

UNITED STATES PATENT AND TRADEMARK OFFICE
CERTIFICATE OF CORRECTION

PATENT NO. : 11,786,055

APPLICATION NO.: 18/136,979

ISSUE DATE : October 17, 2023

INVENTOR(S) : Rodney V. Telford

It is certified that an error appears or errors appear in the above-identified patent and that said Letters Patent is hereby corrected as shown below:

Claim 4, line 6 (column 18, lines 1-2),
"the first setting is at least partially vertically displaced from the first setting"
should read
--the third setting is at least partially vertically displaced from the first setting--;

Claim 9, line 6, (column 18, lines 66-67),
"the first position is at least partially vertically displaced from the first position"
should read
--the third position is at least partially vertically displaced from the first position--

Claim 11, line 3, (column 19, line 13),
"a body configured to support the"
should read
--a body configured to support the child--

Claim 13, line 6 (column 19, lines 60-61),
"the first setting is at least partially vertically displaced from the first setting"
should read
--the third setting is at least partially vertically displaced from the first setting--

MAILING ADDRESS OF SENDER (Please do not use Customer Number below):

Erise IP, P.A.
7015 College Boulevard, Suite 700
Overland Park, KS 66211

A Federal agency may not conduct or sponsor, and a person is not required to respond to, nor shall a person be subject to a penalty for failure to comply with an information collection subject to the requirements of the Paperwork Reduction Act of 1995, unless the information collection has a currently valid OMB Control Number. The OMB Control Number for this information collection is 0651-0033. Public burden for this form is estimated to average 1 hour per response, including the time for reviewing instructions, searching existing data sources, gathering and maintaining the data needed, and completing and reviewing the information collection. Send comments regarding this burden estimate or any other aspect of this information collection, including suggestions for reducing this burden to the Chief Administrative Officer, United States Patent and Trademark Office, P.O. Box 1450, Alexandria, VA 22313-1450 or email InformationCollection@uspto.gov. DO NOT SEND FEES OR COMPLETED FORMS TO THIS ADDRESS. If filing this completed form by mail, send to: **Commissioner for Patents, P.O. Box 1450, Alexandria, VA 22313-1450.**

If you need assistance in completing the form, call 1-800-PTO-9199 and select option 2.

Privacy Act Statement

The Privacy Act of 1974 (P.L. 93-579) requires that you be given certain information in connection with your submission of the attached form related to a patent application or patent. The United States Patent and Trademark Office (USPTO) collects the information in this record under authority of 35 U.S.C. 2. The USPTO's system of records is used to manage all applicant and owner information including name, citizenship, residence, post office address, and other information with respect to inventors and their legal representatives pertaining to the applicant's/owner's activities in connection with the invention for which a patent is sought or has been granted. The applicable Privacy Act System of Records Notice for the information collected in this form is COMMERCE/PAT-TM-7 Patent Application Files, available in the Federal Register at 78 FR 19243 (March 29, 2013). https://www.govinfo.gov/content/pkg/FR-2013-03-29/pdf/2013-07341.pdf

Routine uses of the information in this record may include disclosure to: 1) law enforcement, in the event that the system of records indicates a violation or potential violation of law; 2) a Federal, state, local, or international agency, in response to its request; 3) a contractor of the USPTO having need for the information in order to perform a contract; 4) the Department of Justice for determination of whether the Freedom of Information Act (FOIA) requires disclosure of the record; 5) a Member of Congress submitting a request involving an individual to whom the record pertains, when the individual has requested the Member's assistance with respect to the subject matter of the record; 6) a court, magistrate, or administrative tribunal, in the course of presenting evidence, including disclosures to opposing counsel in the course of settlement negotiations; 7) the Administrator, General Services Administration (GSA), or their designee, during an inspection of records conducted by GSA under authority of 44 U.S.C. 2904 and 2906, in accordance with the GSA regulations and any other relevant (i.e., GSA or Commerce) directive, where such disclosure shall not be used to make determinations about individuals; 8) another federal agency for purposes of National Security review (35 U.S.C. 181) and for review pursuant to the Atomic Energy Act (42 U.S.C. 218(c)); 9) the Office of Personnel Management (OPM) for personnel research purposes; and 9) the Office of Management and Budget (OMB) for legislative coordination and clearance.

If you do not furnish the information requested on this form, the USPTO may not be able to process and/or examine your submission, which may result in termination of proceedings, abandonment of the application, and/or expiration of the patent.

Additional Uses

Additional USPTO uses of the information in this record may include disclosure to: 1) the International Bureau of the World Intellectual Property Organization, if the record is related to an international application filed under the Patent Cooperation Treaty; 2) the public i) after publication of the application pursuant to 35 U.S.C. 122(b), ii) after issuance of a patent pursuant to 35 U.S.C. 151, iii) if the record was filed in an application which became abandoned or in which the proceedings were terminated and which application is referenced by either a published application, an application open to public inspections, or an issued patent, or iv) without publication of the application or patent under the specific circumstances provided for by 37 CFR 1.14(a)(1)(v)-(vii); and/or 3) the National Archives and Records Administration, for inspection of records.

UNITED STATES PATENT AND TRADEMARK OFFICE

UNITED STATES DEPARTMENT OF COMMERCE
United States Patent and Trademark Office
Address: COMMISSIONER FOR PATENTS
P.O. Box 1450
Alexandria, Virginia 22313-1450
www.uspto.gov

APPLICATION NO.	FILING DATE	FIRST NAMED INVENTOR	ATTORNEY DOCKET NO.	CONFIRMATION NO.
18/136,979	04/20/2023	Rodney V. Telford	2877-11.15	6273

118925 7590 02/27/2024
Erise IP, P.A.
7015 College Blvd., Ste 700
Overland Park, KS 66211

EXAMINER
HELVEY, PETER N.

ART UNIT	PAPER NUMBER
3734	

NOTIFICATION DATE	DELIVERY MODE
02/27/2024	ELECTRONIC

Please find below and/or attached an Office communication concerning this application or proceeding.

The time period for reply, if any, is set in the attached communication.

Notice of the Office communication was sent electronically on above-indicated "Notification Date" to the following e-mail address(es):

eofficeaction@appcoll.com
patents@eriseip.com

PTOL-90A (Rev. 04/07)

APPLICATION NO.	ISSUE DATE	PATENT NO.
18/136,979	27-Feb-2024	11786055

Erise IP, P.A.
7015 College Blvd., Ste 700
Overland Park, KS 66211

ELECTRONIC CERTIFICATE OF CORRECTION NOTIFICATION

Your electronic certificate of correction is now available, and can be accessed via Patent Center at https://patentcenter.uspto.gov.

The electronic certificate of correction is the official certificate of correction under 35 U.S.C. 254 or 255. For more information, please visit https://www.uspto.gov/electronicgrants.

UNITED STATES PATENT AND TRADEMARK OFFICE

CERTIFICATE OF CORRECTION

PATENT NO. : 11,786,055 B2
APPLICATION NO. : 18/136979
DATED : October 17, 2023
INVENTOR(S) : Rodney V. Telford

It is certified that error appears in the above-identified patent and that said Letters Patent is hereby corrected as shown below:

In the Claims

Claim 4, (Column 18, Lines 1-2):
"the first setting is at least partially vertically displaced from the first setting"
Should read:
--the third setting is at least partially vertically displaced from the first setting--

Claim 9, (Column 18, Lines 66-67):
"the first position is at least partially vertically displaced from the first position"
Should read:
--the third position is at least partially vertically displaced from the first position--

Claim 11, (Column 19, Line 13):
"a body configured to support the"
Should read:
--a body configured to support the child--

Claim 13, (Column 19, Lines 60-61):
"the first setting is at least partially vertically displaced from the first setting"
Should read:
--the third setting is at least partially vertically displaced from the first setting--

Signed and Sealed this
Twenty-seventh Day of February, 2024

Katherine Kelly Vidal

Katherine Kelly Vidal
Director of the United States Patent and Trademark Office