US 20020102169A1

(19) United States

(12) Patent Application Publication

Wampler

(10) Pub. No.: US 2002/0102169 A1

(43) Pub. Date: Aug. 1, 2002

(54) SEALLESS ROTARY BLOOD PUMP

(75) Inventor: **Richard K. Wampler**, Granite Bay, CA (US)

Correspondence Address:
George H. Gerstman
SEYFARTH, SHAW, FAIRWEATHER & GERALDSON
55 East Monroe Street
Chicago, IL 60603 (US)

(73) Assignee: **Kriton Medical, Inc.**

(21) Appl. No.: **10/034,873**

(22) Filed: **Dec. 26, 2001**

Related U.S. Application Data

(60) Continuation of application No. 09/689,251, filed on Oct. 13, 2000, now Pat. No. 6,368,083, which is a continuation of application No. 09/108,434, filed on Jul. 1, 1998, now Pat. No. 6,080,133, which is a division of application No. 08/910,375, filed on Aug. 13, 1997, now Pat. No. 5,840,070, which is a continuation-in-part of application No. 08/603,536, filed on Feb. 20, 1996, now Pat. No. 5,695,471.

Publication Classification

(51) **Int. Cl.**[7] **F04B 17/00**

(52) **U.S. Cl.** **417/420**; 417/423.7; 417/423.12; 415/900

(57) **ABSTRACT**

An implantable rotary sealless blood pump is provided. The pump includes a housing having an inlet tube on one end and an impeller casing on the other end. A rotor is mounted for rotation within the housing, with the rotor having an elongated shaft portion and an impeller attached to the shaft portion. The impeller is located within the impeller casing. Radial magnetic bearings are carried by the shaft portion and radial magnetic bearings are carried by the housing for maintaining the shaft portion of the rotor within the inlet tube of the housing. A rotor motor includes a plurality of permanent magnets carried by the impeller and a motor stator including an electrically conductive coil located within the housing. A ring of back iron is carried by the impeller to aid in completing a flux return path for the permanent magnets. A plurality of hydrodynamic thrust bearings are located outside of the axis of rotation of the rotor. The impeller uses large axially thick blade sectors with narrow blood channels extending through the impeller, to minimize hemolysis and to increase the working surface of the blades.

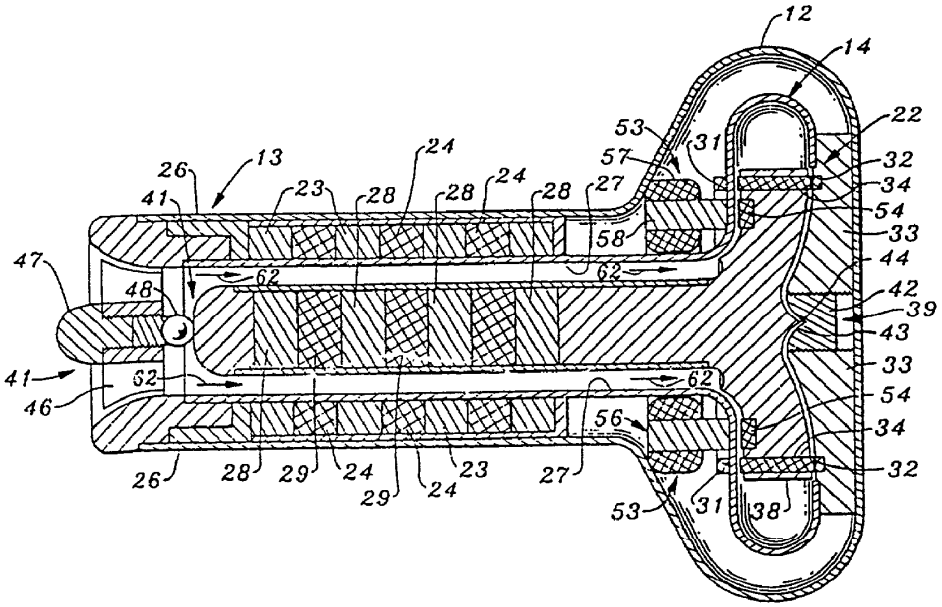

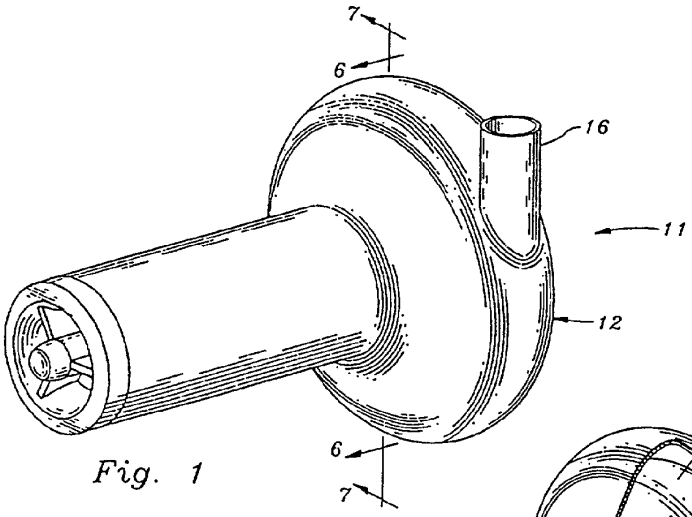

Fig. 1

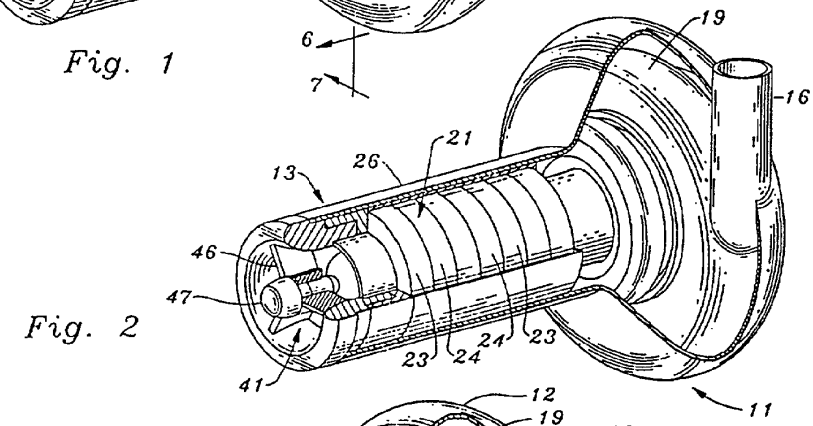

Fig. 2

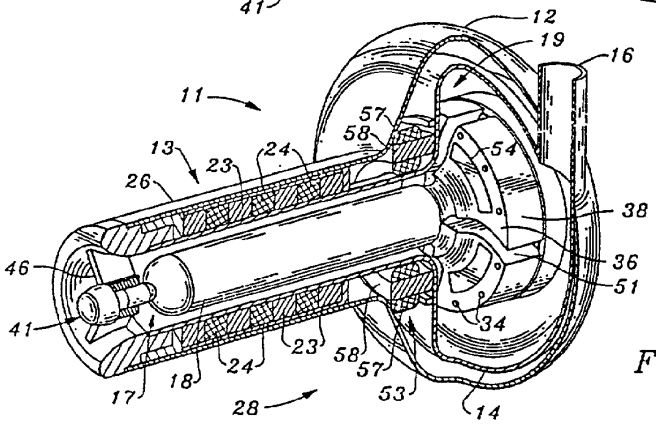

Fig. 3

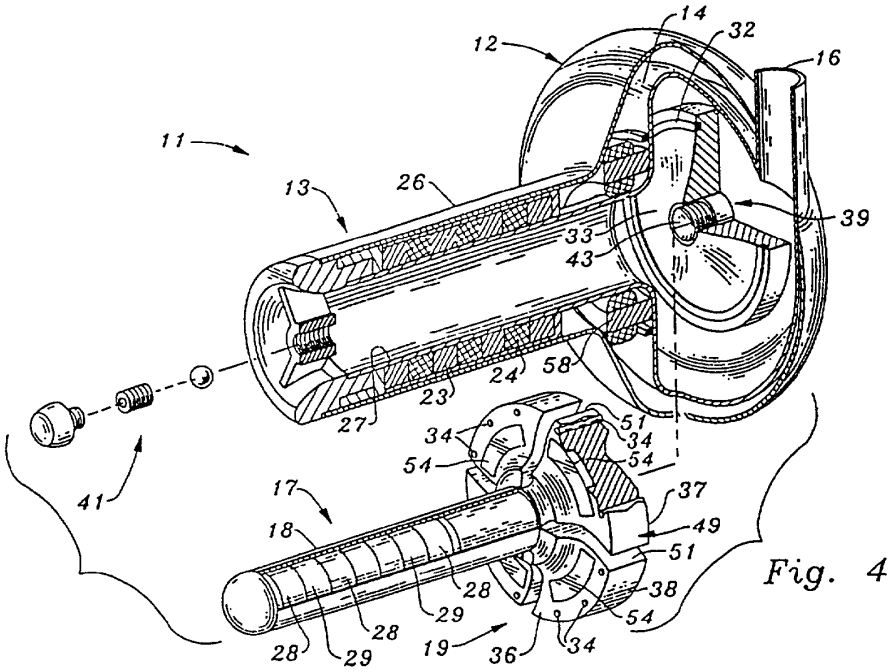
14
32
12
16
11
13
26
39
33
43
58
24
23
27
51
34
34
54
54
41
17
37
18
49
51
28
38
29
54
28
28
29
19
36
34

Fig. 4

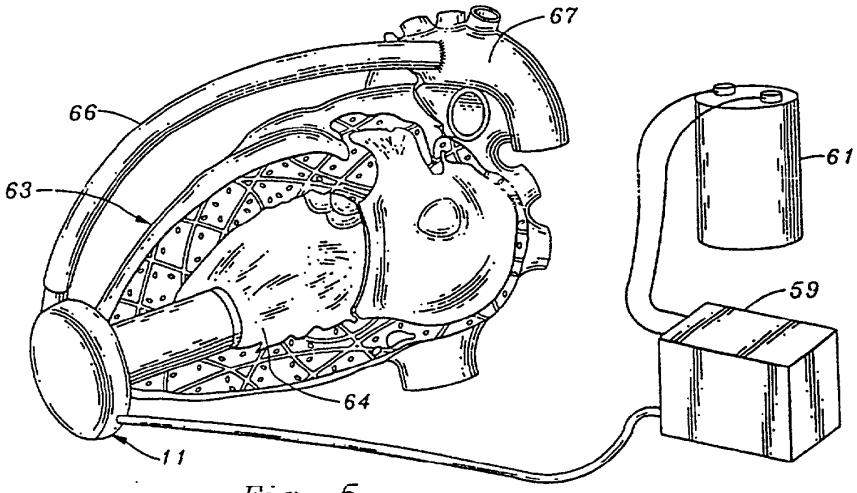
67
66
61
63
59
64
11

Fig. 5

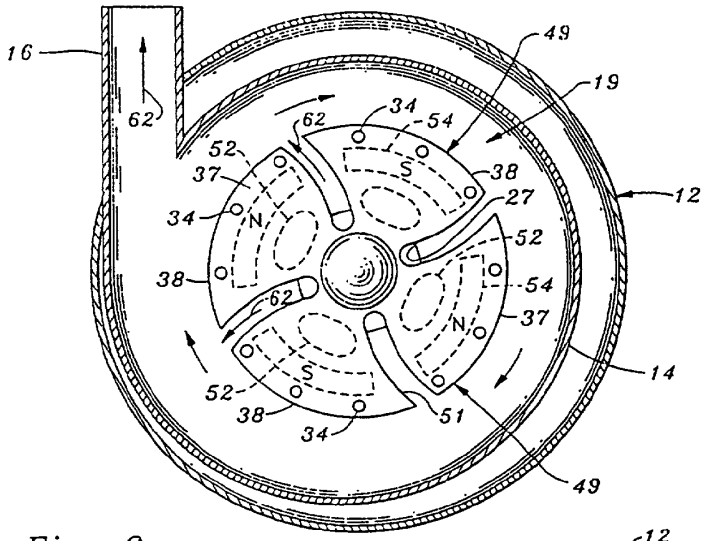
16
62
49
19
34
54
62
52
37
38
S
27
12
34
N
52
38
54
62
37
N
14
52
S
38
51
34
49

Fig. 6

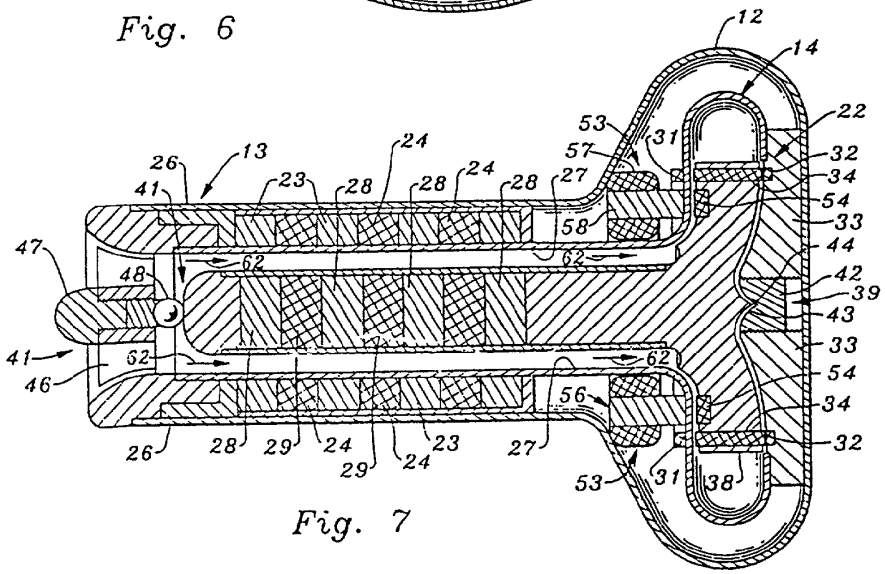
12
14
22
53
31
32
57
34
26
13
24
41
23
28
28
24
28
27
54
58
33
47
62
62
44
48
42
39
43
41
62
62
33
46
54
56
34
26
28
29
24
23
27
32
29
24
53
31
38

Fig. 7

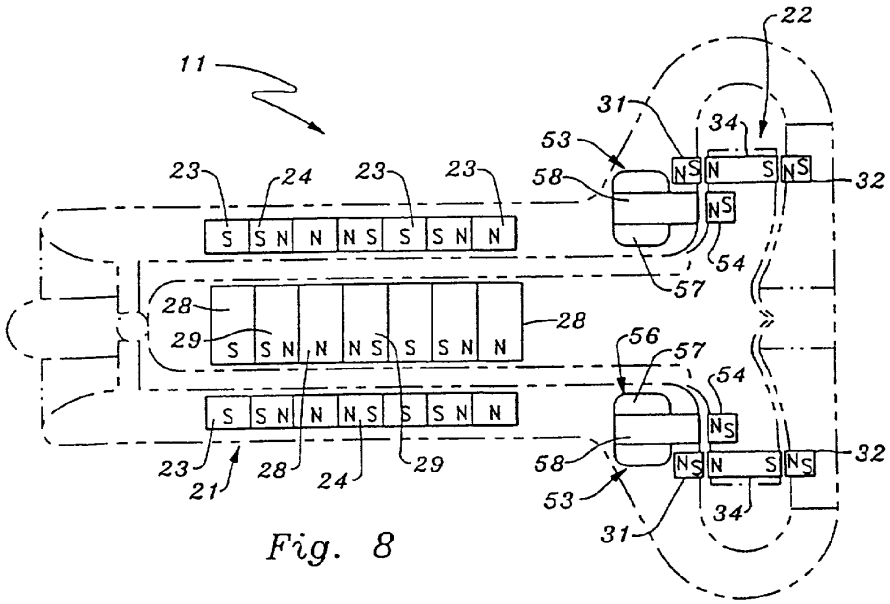
11
22
31
34
53
58
32
23
24
23
23
S S N N N S S S N N
N S N S N S
N S
54
57
28
29
28
56
57
54
S S N N N S S S N N
N S
58
32
23
21
28
24
29
53
34
31

Fig. 8

FIG. 8a

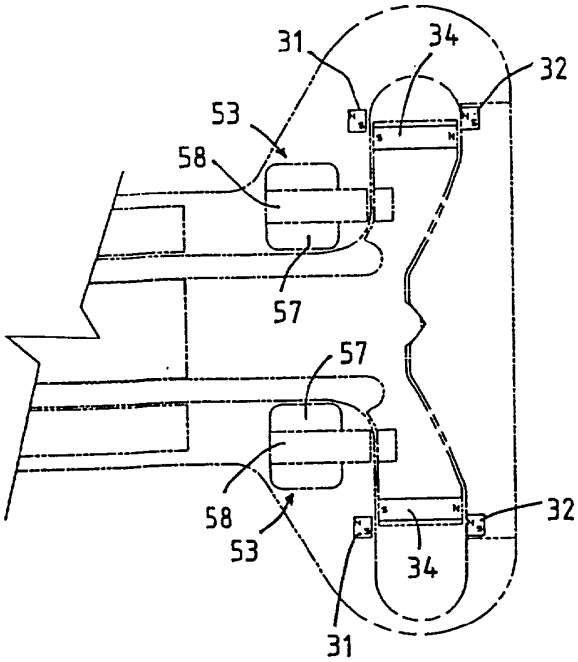

FIG. 8b

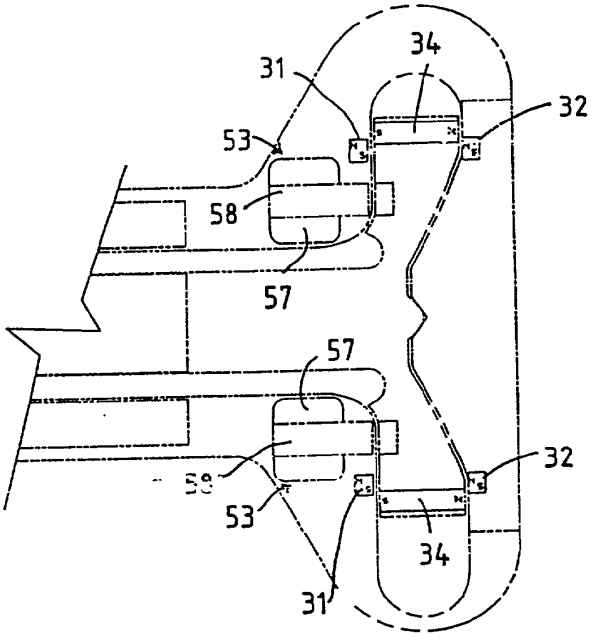

FIG. 9

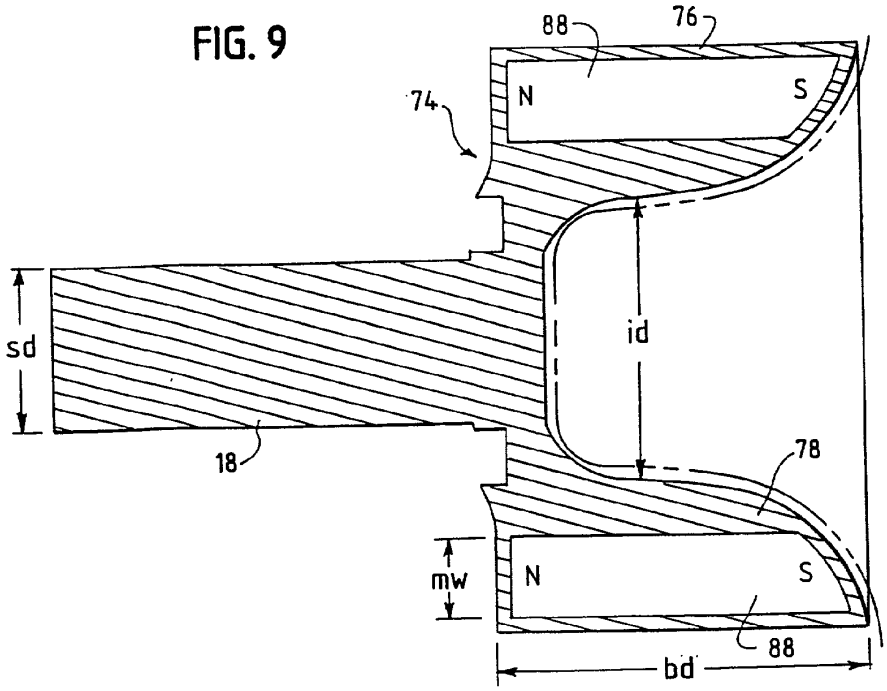

FIG. 10

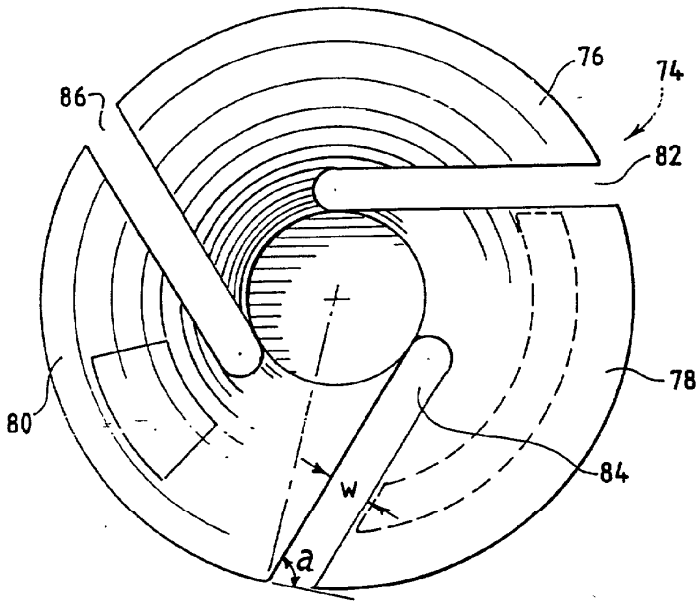

FIG. 11

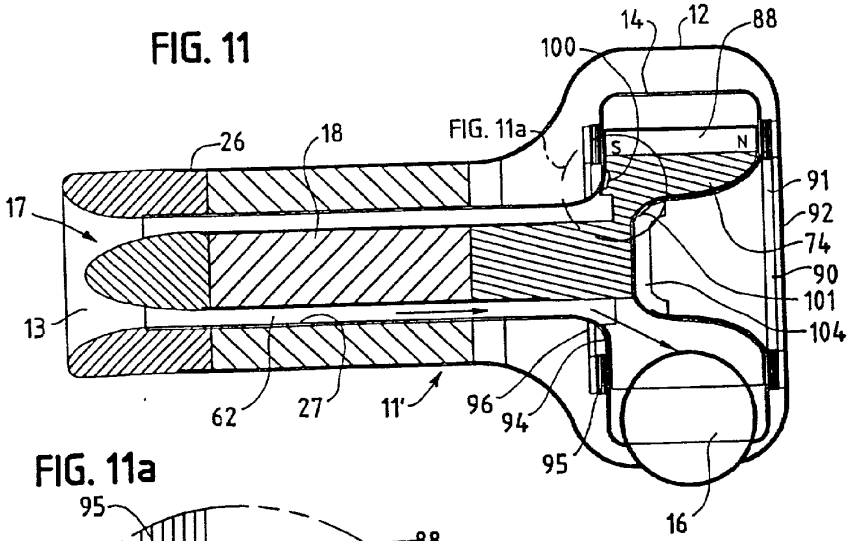

FIG. 11a

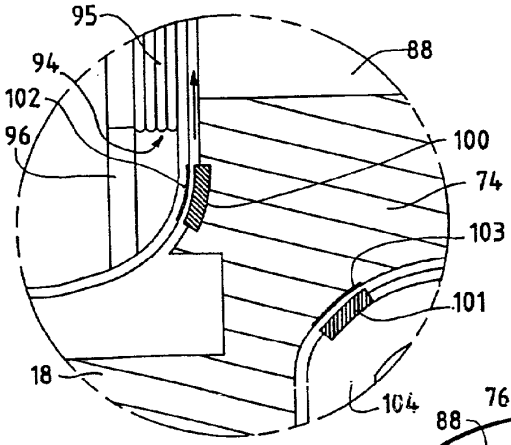

FIG. 12

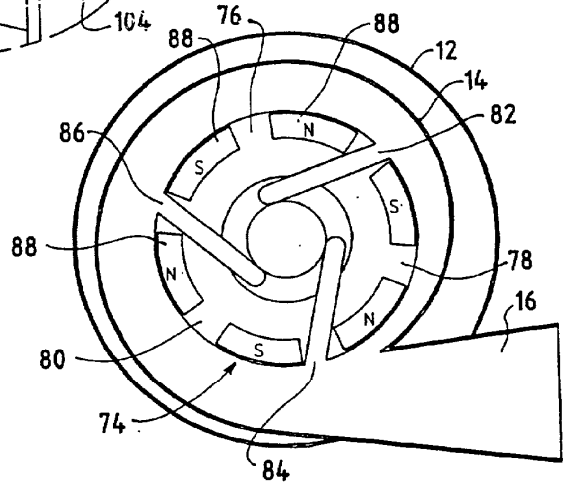

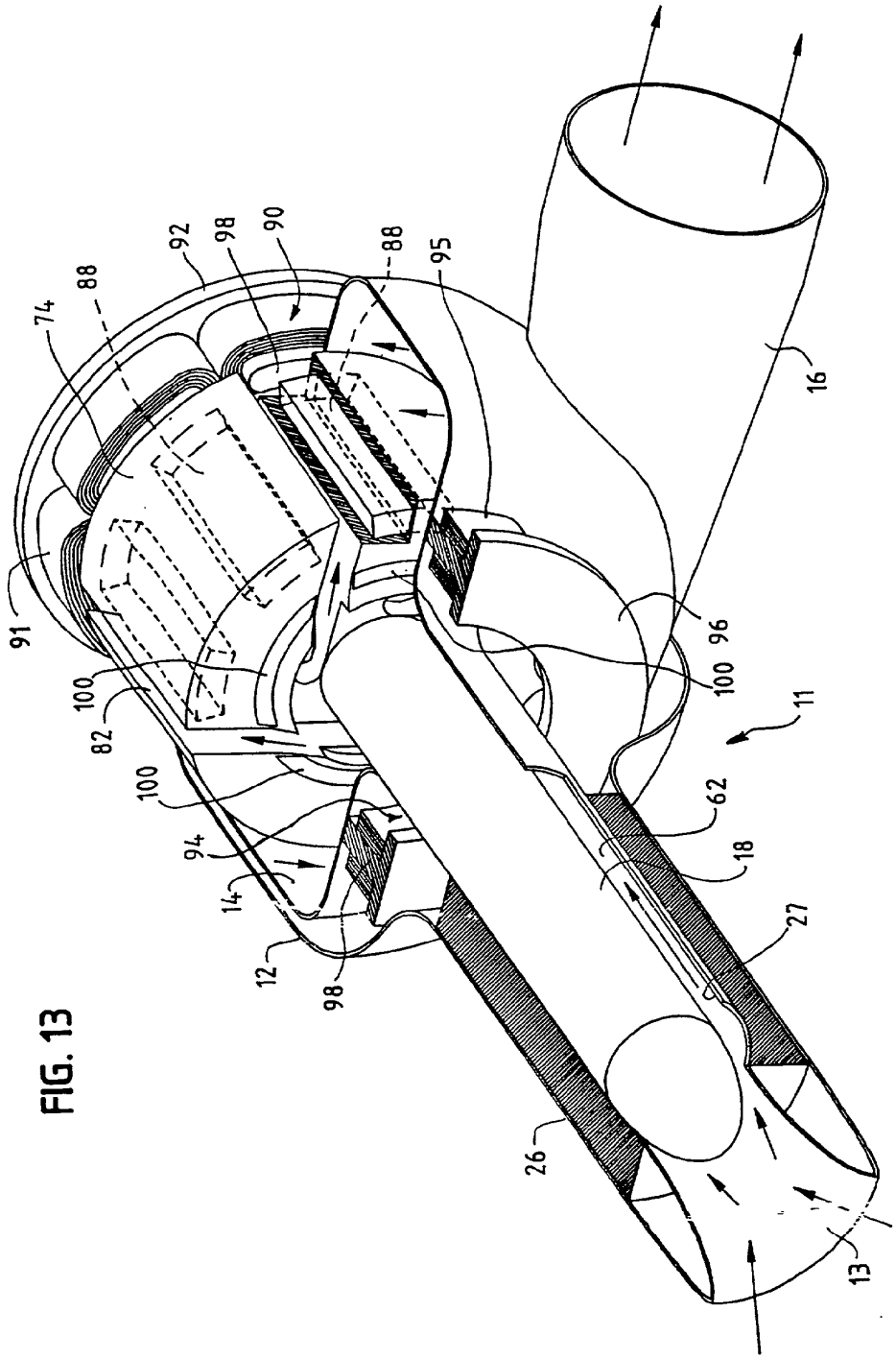
74
88
92
98
90
88
95
16
91
100
82
100
94
14
12
98
96
100
11
62
18
27
26
13

FIG. 13

FIG. 13a

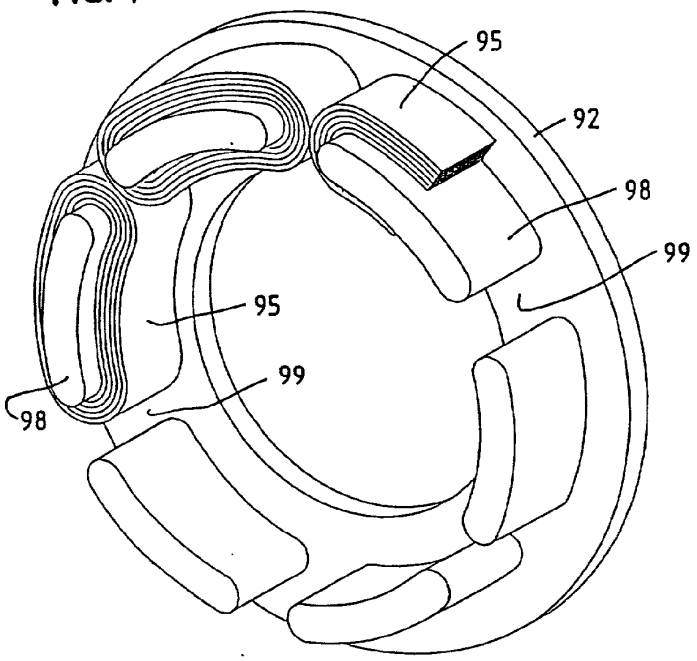

FIG. 13b

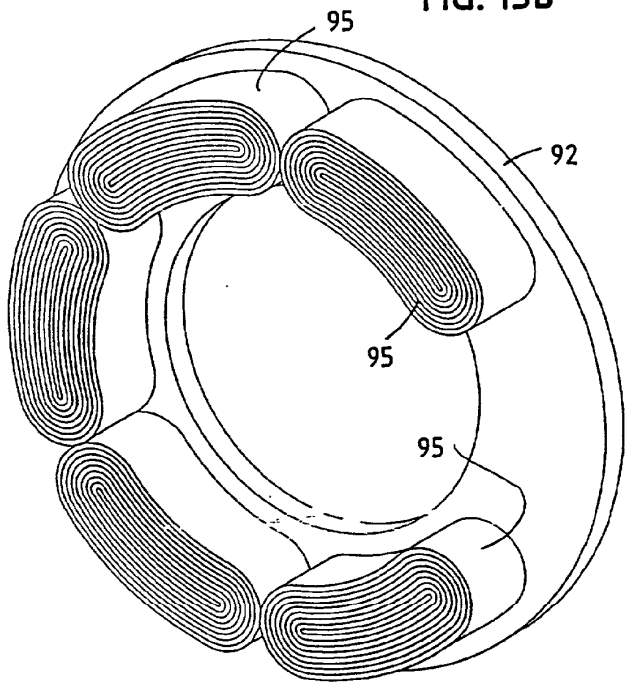

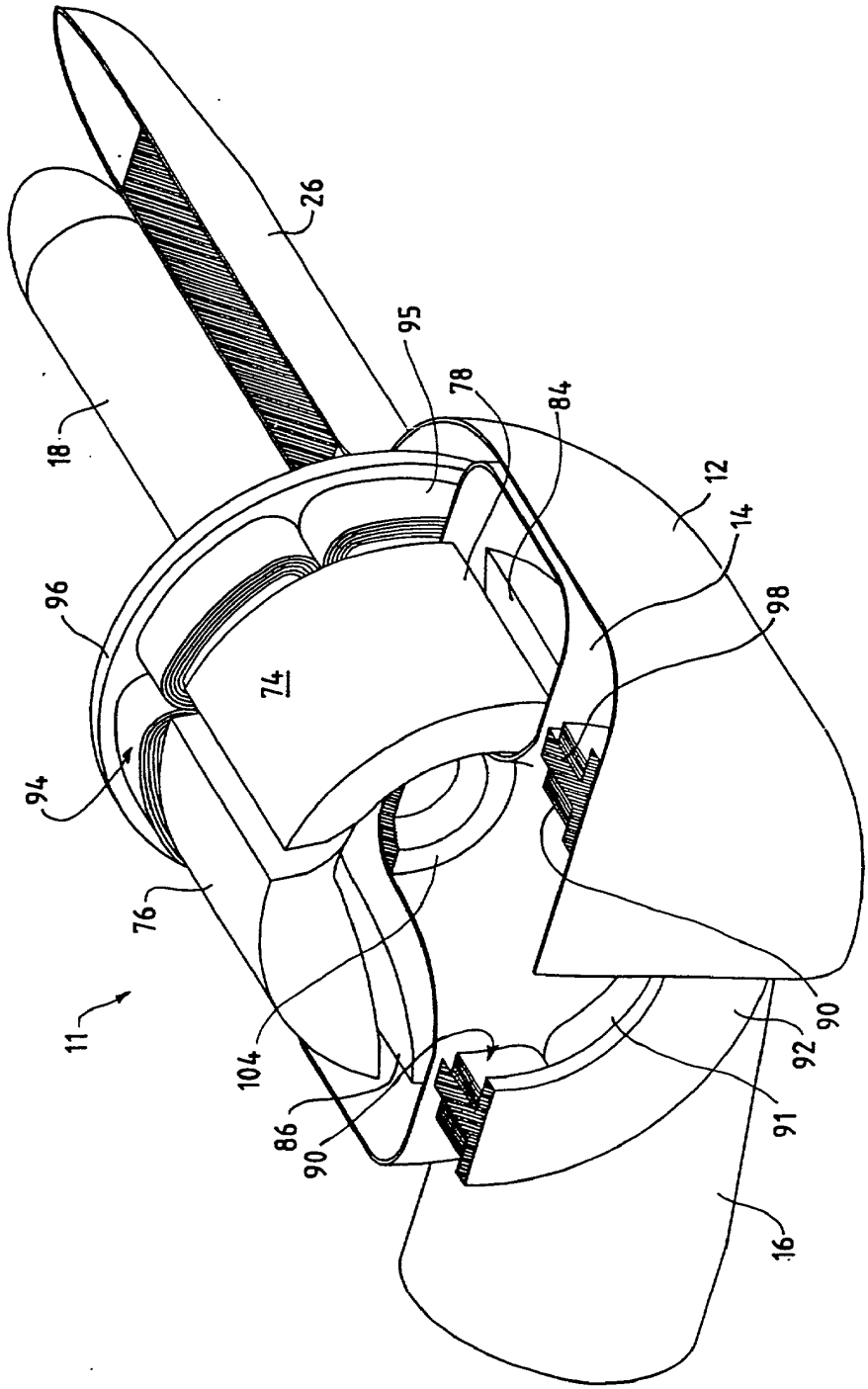

FIG. 14

FIG. 15

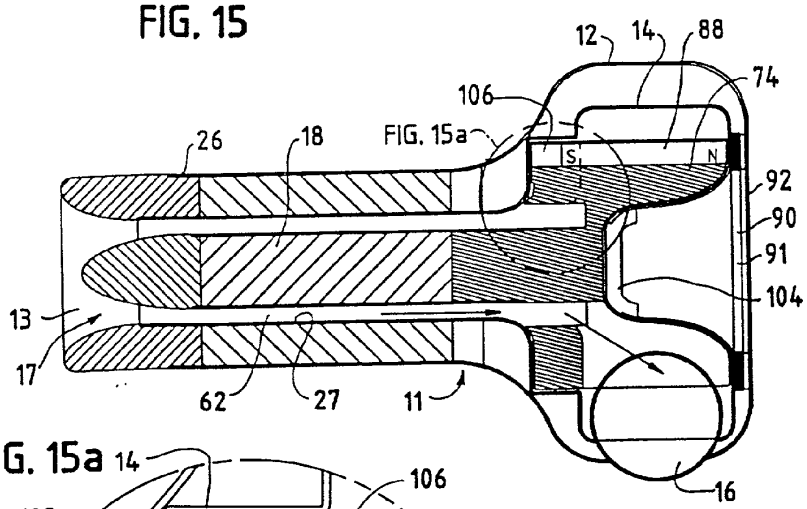

FIG. 15a

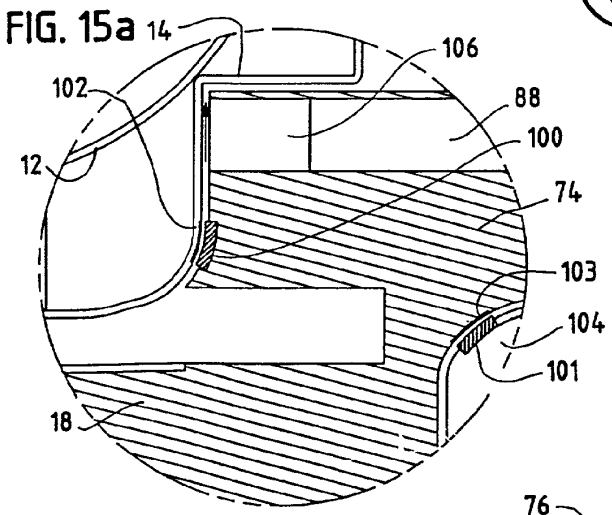

FIG. 16

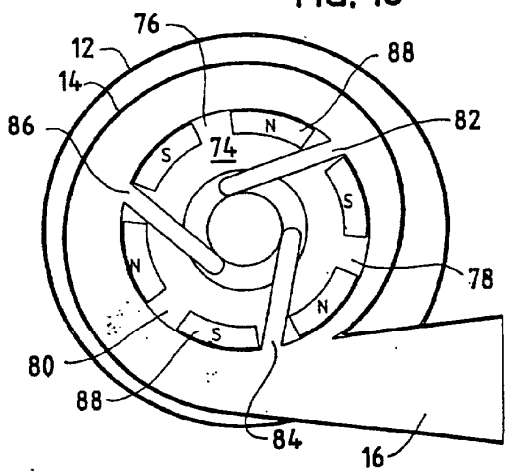

FIG. 17

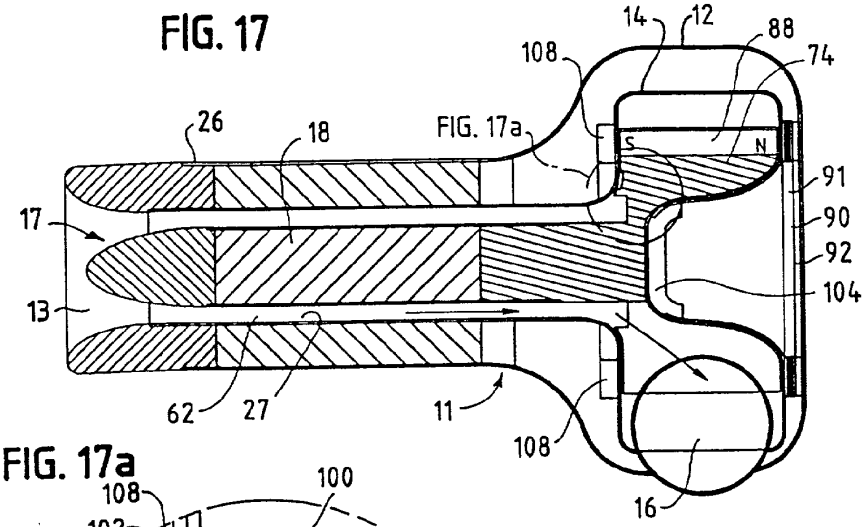

FIG. 17a

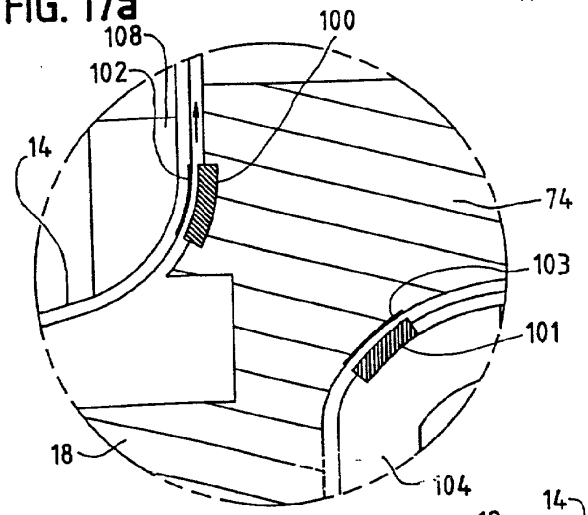

FIG. 18

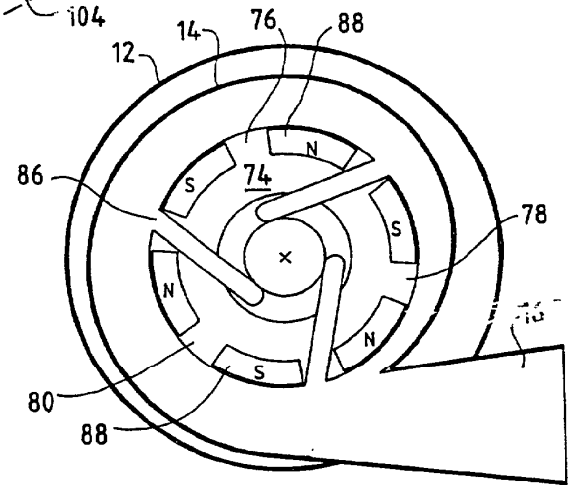

FIG. 19

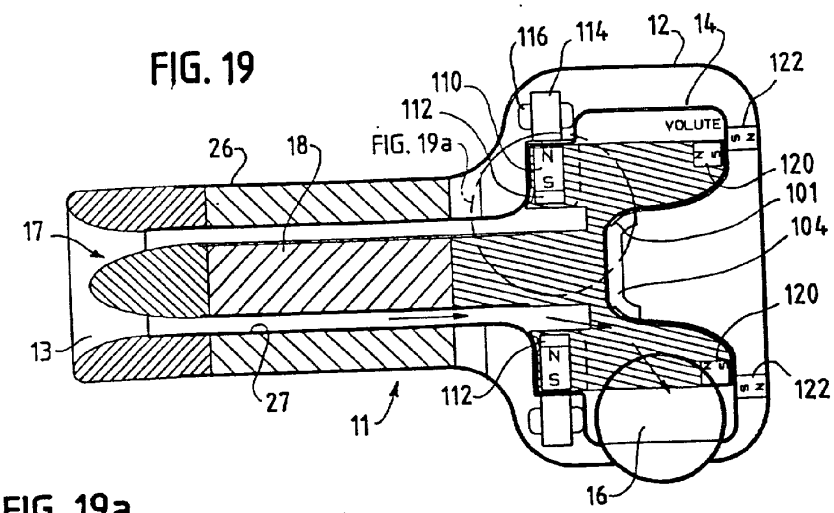

FIG. 19a

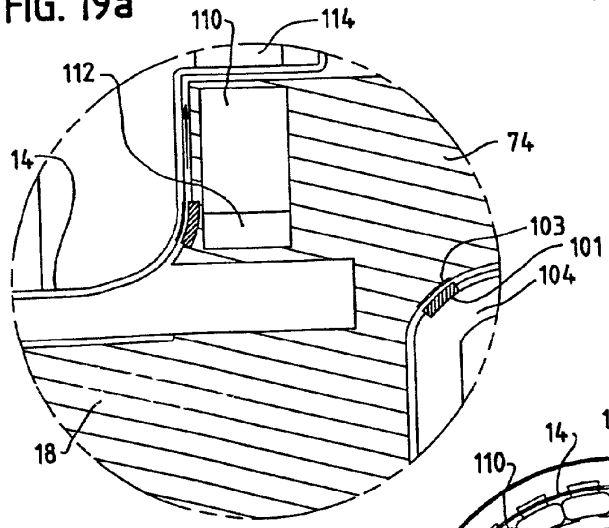

FIG. 20

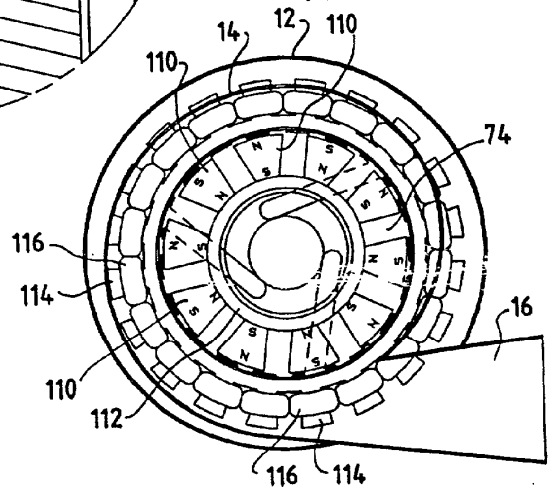

SEALLESS ROTARY BLOOD PUMP

[0001] This application is a continuation of application Ser. No. 09/689,251, filed Oct. 13, 2000, which is a continuation of application Ser. No. 09/108,434, now U.S. Pat. No. 6,080,133 a division of application Ser. No. 08/910,375, filed Aug. 13, 1997, now U.S. Pat. No. 5,840,070, which is a continuation-in-part of application Ser. No. 08/603,536, filed Feb. 20, 1996, now U.S. Pat. No. 5,695,471.

FIELD OF THE INVENTION

[0002] The invention relates generally to the field of blood pumps. More specifically, the invention pertains to continuous flow pumps of rotary design, suitable for permanent implantation in humans for use as chronic ventricular assist devices.

BACKGROUND OF THE INVENTION

[0003] Thousands of heart patients who suffer from severe left ventricular heart failure could benefit from cardiac transplantation. However, owning to a shortage of donor hearts, most of these patients face a foreshortened life span characterized by frequent hospitalizations, severe physical disability, and death from congestive failure or cardiogenic shock. If a left ventricular assist device ("LVAD") were available for chronic use, many of these patients could be returned to prolonged and productive lives.

[0004] Prior art LVADs, now in clinical trials, provide a cyclic or pulsating delivery of blood, designed to emulate the natural pulsatile blood flow through the heart. This design approach has resulted in a variety of anatomic and engineering problems. Cyclic delivery systems tend to be physically large, making implantation difficult or impossible for some patients. Cyclic delivery systems tend to be physically large, making implantation difficult or impossible for some patients. Cyclic delivery systems also employ artificial valves, having special material, longevity, and performance requirements. All of these characteristics make cyclic blood pumping device both complex and expensive.

[0005] It is apparent that if the requirement of pulsatile blood flow is eliminated, the LVAD could be much smaller, simpler, and less expensive. Rotary pumps, whether of centrifugal or axial flow design, provide substantially continuous liquid flow, and potentially enjoy a number of the listed advantages over cyclic delivery systems. However, the prior art has not developed a durable rotary blood pump, owing to unique problems with the rotary pump's driveshaft seal. In a blood environment, such driveshaft seals have a short life, and contribute to a premature failure of the pump. Prior art driveshaft seals may also cause embolisms, resulting in a stroke or even death for the patient.

[0006] Accordingly, it is an object of the present invention to provide an improved rotary blood pump, by eliminating the necessity for a driveshaft seal;

[0007] It is a further object of the present invention to provide a compact, rotary blood pump using passive, magnetic radial bearings to maintain an impeller and its support shaft for rotation about an axis;

[0008] It is yet a further object of the present invention to provide a rotary blood pump having bi-stable operation, in which the impeller and the support shaft shuttle as a unit, between two predetermined axial positions;

[0009] It is another object of the present invention to provide blood immersed axial thrust bearings which are regularly washed by fresh blood flow to prevent thrombosis from occurring;

[0010] It is yet another object of the present invention to provide a unique thick bladed pump impeller, which houses both motor magnets and radial bearing magnets, and includes narrow, deep, blood flow passages;

[0011] It is yet another object of the present invention to provide a pump impeller which is effective pumping viscious liquids, such as blood, at low flow rates, and which minimizes hemolysis of the blood by using only a few pump impeller blades.

SUMMARY OF THE INVENTION

[0012] In accordance with illustrative embodiments of the present invention, a rotary blood pump includes a housing and a pump rotor. A centrifugal pump impeller is attached to an impeller support shaft, or spindle, to form the pump rotor. The pump housing includes an elongated inlet tube surrounding the shaft, and a scroll-shaped casing, or volute, with a discharge outlet, enclosing the impeller.

[0013] The shaft and the impeller are specially suspended within the housing. Radial magnetic bearings of passive design, maintain the support shaft and the impeller about a rotational axis. The magnetic bearing which levitates the shaft includes a plurality of permanent ring magnets and pole pieces arranged along surrounding portions of the inlet tube, and a plurality of permanent disc magnets and pole pieces within the shaft itself. Radially adjacent pairs of these magnets are of like polarity. One part of the magnetic bearing, which maintains the impeller about a rotational axis, includes a plurality of permanent rod or arcuate magnets disposed in spaced, circular relation around blade sectors of the impeller; another part of the bearing includes a pair of permanent ring magnets outside the casing, on either side of the impeller. Adjacent portions of the rod and ring magnets are of opposite polarity.

[0014] The shaft and impeller are axially restrained by a magnetic and hydrodynamic forces in combination with mechanical thrust bearings, or touchdowns. The magnets of the magnetic bearing in the inlet tube and shaft may be arranged in slightly offset axial relation, to produce a translational loading force, or bias, along the longitudinal axis of the rotor. This bias substantially counteracts the axial force resulting from the hydraulic thrust of the rotating impeller. However, the hydraulic thrust will vary as a function of the cardiac cycle and additional restraints are desirable to ensure that pump operation is stable and controlled. For this purpose, a pair of blood immersed thrust bearings is provided. These thrust bearings may be located at either end of the rotor, although other arrangements are feasible.

[0015] One thrust bearing is included at the upstream end of the support shaft, and the other thrust bearing is located on the bottom, or downstream side of the impeller. A spider within the inlet tube includes a touchdown, or thrust surface, against which the end of the shaft periodically touches.

Another touchdown is provided on an inner surface of the casing base, adjacent a downstream terminus of the impeller. A predetermined amount of spacing is included between the two touchdowns, so as to allow the shaft/impeller assembly axially to shuttle back and forth, in response to the user's cardiac cycle. This shuttling motion will produce a pumping action, frequently exchanging blood in the touchdown area with fresh blood from the circulation. This pumping action minimizes the likelihood of blood thrombosis in the thrust region, by maintaining the blood at an acceptable temperature and by shortening its residence time in the thrust bearing gap.

[**0016**] The impeller is of unique configuration and characteristics, owing to the special requirements of the present application. Contrary to conventional centrifugal pump design, the present invention uses relatively few impeller blades, generally resembling pie-shaped sectors. Moreover, the blades are made quite thick in an axial direction, having deep and narrow, arcuate channels between adjacent blades for the passage of blood through the impeller. The substantial height of the blades provides a relatively large blade working surface, ensuring efficient pump operation. These structural features decrease hemolysis of the blood, while maintaining useful efficiency in a pump using so few impeller blades.

[**0017**] Sealed, hollow chambers are provided within the thick impeller blades to reduce the density of the impeller. These chambers reduce gravity induced loads on the thrust bearings, which in turn reduces the likelihood of thrombosis of the blood used to lubricate the bearings.

[**0018**] The thick impeller blades are also used advantageously to house magnets used in the pump drive system. Torque drive is imparted to the impeller by magnetic interaction between arcuate, permanent magnetic segments imbedded within each impeller blade sector, and a circular electromagnetic stator, affixed to the casing. Back-EMF sensing is used to commutate the brushless motor stator, providing attractive and repulsive forces upon the magnetic segments. A control unit and a portable power supply, worn on the user, power the pump drive system. The control unit allows the speed and drive cycle of the motor either to be programmed or interactively determined by the user's physical activity or condition.

[**0019**] In certain embodiments of the invention, the motor includes a plurality of permanent magnets carried by the impeller and a motor stator including an electrically conductive coil located within the housing. A ring of back iron is fixed to the casing to aid in completing a flux return path for the permanent magnets and to decrease the axial thrust which results from the attraction of the motor rotor magnets toward the motor rotor stator. The impeller has a forward side facing the inlet tube and a rear side downstream of the forward side. In one embodiment, the conductive coil of the motor stator is located adjacent the rear side of the impeller, and a stator back iron ring is located outside of the conductive coil, within the housing and fixed to the housing. In one embodiment, a second ring of back iron is located on the forward side of the impeller and outside of the casing but inside of the housing, with the second ring of back iron being fixed to the casing. In that embodiment, a second motor stator having an electrically conductive coil is located on the forward side of the impeller outside of the casing but inside of the housing. In that embodiment, the second ring of back iron is located forward of the second motor stator.

[**0020**] In certain embodiments, a plurality of hydrodynamic thrust bearings are located outside of the axis of rotation of the rotor. The hydrodynamic bearings are wedge-shaped and, during rotation of the rotor and impeller, the hydrodynamic bearings are separated from the casing by a fluid film and are not in direct mechanical contact with the casing.

[**0021**] A more detailed explanation of the invention is provided in the following description and claims, and is illustrated in the accompanying drawings.

BRIEF DESCRIPTION OF THE DRAWINGS

[**0022**] **FIG. 1** is a left front perspective of the blood pump of the present invention;

[**0023**] **FIG. 2** is a fragmentary, cross-sectional view of the pump of **FIG. 1**, showing a plurality of ring magnets comprising part of the magnetic bearing assembly;

[**0024**] **FIG. 3** is a fragmentary, cross-sectional view of the pump of **FIG. 1**, showing the shaft and an impeller;

[**0025**] **FIG. 4** is a view as in **FIG. 1**, but with the shaft and impeller shown removed from the housing;

[**0026**] **FIG. 5** is a simplified, fragmentary, representation of a human heart, showing the pump implanted within the left ventricle of the heart;

[**0027**] **FIG. 6** is a transverse, cross-sectional view of the housing, impeller, and impeller chamber, taken along the line **6-6**, shown in **FIG. 1**;

[**0028**] **FIG. 7** is a longitudinal, cross-sectional view of the pump, taken along the line **7-7**, shown in **FIG. 1**;

[**0029**] **FIG. 8** is a longitudinal, cross-sectional view of a simplified, schematic representation of the pump, showing respective polarities of the magnets and the pole pieces of the passive radial magnetic bearings, and the elements of the pump motor, including rotor magnets and a motor stator;

[**0030**] **FIG. 8***a* is a schematic view, similar to **FIG. 8**, but showing another embodiment of the present invention;

[**0031**] **FIG. 8***b* is a schematic view, similar to **FIG. 8***a*, but showing another embodiment of the present invention.

[**0032**] **FIG. 9** is a longitudinal, cross-sectional view of an impeller constructed in accordance with the principles of the present invention;

[**0033**] **FIG. 10** is an end view thereof, taken from the right side of **FIG. 9**;

[**0034**] **FIG. 11** is a longitudinal, cross-sectional view of a simplified, schematic representation of another embodiment of the pump;

[**0035**] **FIG. 11***a* is an enlarged view of the circled portion **11***a* from **FIG. 11**;

[**0036**] **FIG. 12** is a cross-sectional end view of the **FIG. 11** pump with the end of the housing and casing removed for clarity;

[**0037**] **FIG. 13** is a perspective view, partially broken for clarity, of the blood pump of **FIG. 11**;

[0038] **FIG. 13***a* is a perspective view of a portion of **FIG. 13**, showing the slotted motor stator;

[0039] **FIG. 13***b* is a perspective view, similar to **FIG. 13***a* but showing a slotless motor stator.

[0040] **FIG. 14** is another perspective view, partially broken for clarity, of the blood pump of **FIG. 11**;

[0041] **FIG. 15** is a longitudinal, cross-sectional view of another embodiment of the pump;

[0042] **FIG. 15***a* is an enlarged view of the circled portion **15***a* from **FIG. 15**;

[0043] **FIG. 16** is a cross-sectional end view of the **FIG. 15** pump, with the end of the housing and casing removed for clarity;

[0044] **FIG. 17** is a longitudinal, cross-sectional view of another embodiment of a blood pump;

[0045] **FIG. 17***a* is an enlarged view of the circled portion **17***a* from **FIG. 17**;

[0046] **FIG. 18** is a cross-sectional end view of the **FIG. 17** pump, with the end of the housing and casing removed for clarity;

[0047] **FIG. 19** is a longitudinal, cross-sectional view of another embodiment of the present invention;

[0048] **FIG. 19***a* is an enlarged view of the circled portion **19***a* from **FIG. 19**; and

[0049] **FIG. 20** is a cross-sectional end view of the **FIG. 19** pump, with the end of the housing and casing removed for clarity.

DETAILED DESCRIPTION OF THE PREFERRED EMBODIMENT

[0050] Turning now to FIGS. **1-8** of the drawings, a sealless rotary blood pump **11** includes a housing **12**, having an elongated inlet tube **13** and an impeller casing or volute **14**. A discharge tube **16** extends through the housing to communicate with the interior periphery of casing **14**. Tube **16** has a tangential orientation with respect to a radius of the casing, for effectively channeling the blood output from the pump.

[0051] A pump rotor **17** is located within housing **12**, within casing **14**, and includes an elongated, right-circular cylindrical support shaft or spindle **18**, attached to a disc-shaped impeller **19**. Rotor **17** is mounted for rotation about a longitudinal axis which extends both through shaft **18** and impeller **19**. It should be noted that the preferred embodiment disclosed herein includes an impeller and a casing of centrifugal design. However, many of the structural features and aspects of operation of the present invention may also be adapted advantageously to rotary blood pumps of axial flow design.

[0052] The pump **11** of the present invention includes a forward magnetic bearing **21** and a rearward magnetic bearing **22** to levitate rotor **17** and maintain it in proper radial alignment with respect to its longitudinal axis. A radial magnetic bearing construction is shown in U.S. Pat. No. 4,072,370, issued to Wasson. The '370 Patent is hereby expressly incorporated by reference. The forward magnetic bearing **21** herein may be constructed entirely in accordance with the teachings of the '370 Patent. However, several simplifications and improvements to the construction shown in the '370 Patent are disclosed herein. For example, it has been determined that the radially polarized ring magnets (numerals **44** and **46**) of the '370 device, are not necessary for successful practice of the invention herein. In addition, as will be explained below, the axially magnetized ring magnets (numeral **22**) of the '370 device may advantageously be replaced with axially magnetized disc magnets for purposes of the present invention.

[0053] Accordingly, the forward magnetic bearing **21** includes a plurality of rings, comprising ferromagnetic pole pieces **23** and axially polarized permanent magnets **24**. As shown most clearly in **FIGS. 7 and 8**, pole pieces **23** and magnets **24** are arranged in contingent, alternating fashion, and are located between outer sidewall **26** and inner sidewall **27** of inlet tube **13**. The polarization of opposing magnets is the same, inducing an identical polarization into a respective pole piece therebetween. A combination of high strength adhesive and surrounding tube sidewalls, maintains the arrangement of magnets and pole pieces in contingent relation, despite strong magnet forces attempting to urge the rings apart.

[0054] Forward magnetic bearing **21** also includes a plurality of discs, comprising ferromagnetic pole pieces **28** and axially polarized permanent magnets **29**. Pole pieces **28** and magnets **29** are also arranged in contingent, alternating fashion, so as to form a magnetic structure which mirrors the polarity and axial position of respective pieces and magnets of the surrounding rings. This magnetic structure is first assembled and secured together using high strength adhesive, and is then installed within the hollow volume of shaft or spindle **17**. The magnetic polarizations and repulsive forces produced by the magnets and the pole pieces of forward magnetic bearing **21** are such that magnetic levitation of support shaft **18** results.

[0055] To provide additional radial restraint for rotor **17**, rearward magnetic bearing **22** is also provided. Bearing **22** includes a first ring magnet **31** mounted on an outer wall of casing **14**, and a second ring magnet **32** imbedded within a circular casing base **33**. The bottom portion of casing **14** is attached and sealed to base **33**, to form a fluid impervious enclosure for impeller **19** (see **FIG. 7**). Both magnets **31** and **32** are axially polarized, but each has a different polarization facing impeller **19**. Bearing **22** also includes a plurality of rod magnets **34**, transversely extending from an upper face portion **36** to a lower face portion **37** of impeller **19**. Rod magnets **34** are arranged in spaced, circular fashion, adjacent an outer periphery **38** of impeller **19**. The polarizations between the ends of magnets **34** and the adjacent surfaces of magnets **31** and **32** are respectively opposite, creating attractive, but equal and opposite magnetic forces acting on the impeller. It can be seen that radial movement of the impeller (deflection from the axis of rotation) will result in a restoring force due to the attraction between the magnets **34** towards magnets **31** and **32**. The magnetic force in the axial direction will largely be counterbalanced to the opposing magnetic attraction of magnets **34** to magnet **31** and magnets **34** to magnet **32**. However, the action of the magnetic force in the axial direction would not be restoring.

[0056] It should also be noted that other configurations, locations, numbers, and polarization orientations may be

used for the components forming rearward magnetic bearing **22**. For example, magnets **34** may be arcuate segments, rather than rods. Also, the polarizations of the magnets **31**, **32**, and **34** may be arranged to effect respective repulsive forces, rather than the attractive forces specifically disclosed herein. In this manner, referring to **FIGS. 8***a* and **8***b*, the south pole of magnets **34** would be adjacent the south pole of magnet **31** and the north pole of magnets **34** would be adjacent the north pole of magnet **32**. For the magnets to be restoring in the radial direction, the magnets would have to be offset. To this end, in the **FIG. 8***a* embodiment magnets **34** would be more outward radially than magnets **31** and **32**. Alternatively, in the **FIG. 8***b* embodiment magnets **34** are radially inside the radial dimension of magnets **31** and **32**. If a repulsive configuration is used, as illustrated in **FIGS. 8***a* and **8***b*, the action of the magnetic force would be restoring in both the radial and axial direction.

[**0057**] Although the drawings show magnets **32** and **34** as if portions thereof are directly immersed in blood, in actual practice, a thin-walled non-magnetic jacket or a plastic coating would be placed over these portions, to prevent contact between the magnets and the blood. Such contact, if it were allowed, would likely cause an undesirable chemical reaction, to the detriment of the blood. However, for clarity, the referenced jacket or coating, is not shown in the drawings.

[**0058**] To provide mechanical limitations on axial, translational excursions of the rotor, a first thrust bearing **39** and a second thrust bearing **41** are provided. First thrust bearing **39** includes a threaded plug **42**, installed within casing base **33**. Plug **42** is screw adjustable along the longitudinal axis of rotor **17**, and includes a recessed bearing surface **43**. Surface **43** is contoured to accommodate a corresponding bearing tip **44**, in the lower face portion of impeller **19**. It should be noted that the particular configuration of bearing **39** is not critical, and planar bearing surfaces may alternatively be used in this application.

[**0059**] Second thrust bearing **41** is secured within the blood entry end of inlet tube **13**, and includes a spider **46**, adjustment knob **47**, and ball **48**. Rotation of knob **47** will translate ball **48** along the longitudinal axis of rotor **17**.

[**0060**] Alternative locations and constructions for second thrust bearing **41** are also contemplated. For example, an annular thrust bearing surface could be provided on the inner wall of casing **14**, adjacent the upper face portion **36** of impeller **19**. In this arrangement, portion **36** would slidably contact the annular thrust bearing surface. By eliminating spider **46** and the associated components of the upstream thrust bearing, the possibility of blood deposits forming on these structures would be eliminated.

[**0061**] It will be appreciated that thrust bearings **39** and **41** are effective not only to provide limit stops to axial movement of rotor **17**, but also to adjust certain operational aspects of the pump. In the drawings, the upstream end of support shaft **18** is shown in contact with ball **48**. However, this will not always be the case during the course of operating the pump. For example, it is desirable for the two thrust bearings to be adjusted so that the distance between them, is slightly greater than the overall length of the rotor. This will allow the rotor to "shuttle", back and forth between the axial constraints provided by the thrust bearings with each cardiac cycle of the user. Each such cycle will produce a pumping action, bringing fresh blood into the touchdown, or thrust bearing area.

[**0062**] The present invention does not use a journal bearing to restrain the rotor. Of necessity, a journal bearing radially encases at least a portion of the rotor's support shaft or spindle. It is within this thin, annular volume between the shaft and the bearing surface, where thrombosis can occur in prior art devices as a consequence of heat and excessive residence time within the bearing. The bi-stable operation of the pump and rotor of the present invention, continuously flushes the blood around each thrust bearing, avoiding thrombosis effects of prior art journal bearings.

[**0063**] There is also an important physical relationship which exists between the rotor and the magnetic bearings of the device disclosed herein. This relationship is established and maintained by proper axial placement of the adjustable thrust bearings. In operation of the pump, the pressure gradient produced by the rotating impeller imparts an upstream axial force on the rotor. This force needs to be substantially counterbalanced, to ensure that cardiac pulses will create sufficient pressure variances through the pump, to effect bi-stable operation. By adjusting the axial relationship of the pole pieces **23** and the magnets **24** with respect to the pole pieces **28** and magnets **29**, a downstream axial force will be produced. Since the forces within forward magnetic bearing **21** are repulsive, the desired downstream loading or bias will be effected when the magnets and pole pieces within the shaft are translated slightly downstream from the magnets and pole pieces in the inlet tube (See, **FIGS. 7 and 8**). Thus, second thrust bearing **41** is effective to shift, or offset the rotor downstream a sufficient amount so the resultant, repulsive magnetic forces substantially counterbalance the hydrodynamic axial force produced by the rotating pump impeller.

[**0064**] We can now turn to the special design considerations and operational characteristics of impeller **19**. As will be noted particularly in **FIG. 6**, the impeller includes a plurality of large blade sectors **49**. Owing to its relatively high viscosity and susceptibility to damage from heat and mechanical action, blood is a uniquely difficult liquid to pump.

[**0065**] It is generally preferable in a large centrifugal pump, to have a substantial number of thin, sharp impeller blades with relatively large voids or passages, between the blades, for the passage of low viscosity liquid. However, such a conventional design is not desirable, for a small centrifugal pump which has to pump a viscous liquid, such as blood.

[**0066**] When blood flows axially into the leading edges of impeller blades it tends to be damaged by the mechanical action and turbulence associated with the impeller blades. Thus, one of the design considerations of the present invention is to reduce such hemolysis, by minimizing the number of impeller blades and leading edges.

[**0067**] To maintain efficiency in a small pump with so few blades, the effective working area of the blades needs to be increased. This was accomplished in the present design by modifying the size and configuration of conventional blades in two significant aspects. First, blade sectors **49** are made relatively wide or expansive through a rotational aspect (see

FIG. 6). In other words, the outer periphery of each blade sector **49** assumes approximately 80 to 85 degrees of rotation. It should be noted that an alternative design contemplated herein includes only two blade sectors, each of which assumes approximately 175 degrees of rotation. In either case, the width of the impeller blade sectors of the present invention differ significantly from known prior art blades.

[**0068**] The second modification pertains to the thickness or height of the blade sectors. As shown particularly in FIGS. **4** and. **7**, blade sectors **49** are relatively thick in an axial direction. As a consequence of these modifications, a narrow and deep impeller blood flow path or passageway **51** is defined between adjacent edges of blade sectors **49**. By increasing the thickness of the blade sectors and narrowing the blood passageway, the ratio between the area of working surface of the blades and the volume of the passageway is increased. Also, the average distance of the liquid in the passageway from the working surface of the blades is decreased. Both of these beneficial results provide a small pump for blood which has few blades for damaging blood, yet maintains acceptable efficiency.

[**0069**] The size and configuration of the impeller blades also allows the structural integration of a number of features directly within the impeller **19**. For example, the previously discussed rearward magnetic bearing **22** includes a plurality of rod magnets **34** of considerable length. Owing to the thickness of the blade sectors, these magnets are readily accommodated within the sectors. The sectors may also be provided with respective hollow chambers **52**, to reduce the mass of the impeller and the gravity induced loads on the thrust bearings (see, **FIG. 6**).

[**0070**] Lastly, a brushless rotor motor **53** includes arcuate magnetic segments **54**, imbedded within the upper face portion **36** of blade sectors **49**. As discussed above, the portions of segments **54** which would otherwise be in fluid communication with the pumped blood, are encased in a jacket or a coating (not shown) to prevent any chemical reaction between the blood and the magnetic segments. Making reference to **FIGS. 6 and 8**, segments **54** have alternating orientations in their polarities, and are directed toward an adjacent motor stator **56**. Included within stator **56** are windings **57** and a circular pole piece or back iron **58**, mounted on the outer surface of impeller casing **14**. Windings **57** are interconnected by means of percutaneous wires to a controller **59** and a power supply **61**, as shown in **FIG. 5**. Alternative to using wires, transcutaneous power transmission could be used. It is contemplated that controller **59** and power supply **61** may be worn externally by the user, or alternatively, they may be completely implanted in the user.

[**0071**] Controller **59** may include circuitry as simple as a variable voltage or current control, manually adjusted or programmed to determine the running rate of pump. However, controller **59** may also have interactive and automatic capabilities. For example, controller **59** may be interconnected to sensors on various organs of the user, automatically and instantaneously to tailor operation of the pump to the user's physical activity and condition.

[**0072**] The windings **57** are energized by the electrical output of controller **59** to produce an electromagnetic field. This field is concentrated by pole piece **58**, and is effective to drive magnets **54** and the rotor **17**, in rotary fashion. The back EMF resulting from the magnets **54** passing by the windings is detected by the controller. The controller uses this back EMF voltage to continue generation of the electromagnetic field in synchronism with further rotation of the rotor. Brushless operation of the motor **53** is effected, then, by electromagnetic interaction between the stator and magnets imbedded within the pump's impeller blades.

[**0073**] Motor **53**, with windings **57** and pole piece **58**, together with magnets **54**, function not only to transmit torque but also provide a restoring radial magnetic force that acts as a radial bearing. As illustrated in **FIGS. 7 and 8**, magnets **54** are carried by blade sectors **49** and are positioned in radial alignment with pole piece **58**. The magnets **54** have attraction with the iron pole piece **58** of the stator. Any attempt to deflect the impeller radially produces an increasing restoring force between the pole piece **58** and the magnets **54** which would cause the impeller to return to a neutral position.

[**0074**] Rotation of the rotor **17**, including shaft **18** and impeller **19**, causes blood to flow through inlet tube **13** in the direction of arrows **62**. The blood continues its path from the upper edge of passage **51** to the interior of casing **14**. Discharge tube **16** allows the blood to be expelled from the casing an into the user's cardiovascular system.

[**0075**] Anatomical placement of the pump **11** is shown in **FIG. 5**. The simplified representation of a human heart **63**, includes a left ventricle **64** and an aorta **67**. The inlet tube **16** serves as the inflow cannula and is placed into the apex of the left ventricle **64**. An arterial vascular graft **66** is connected on one end to tube **16** and on the other end to the aorta **67** through an end to side anastomosis.

[**0076**] The centrifugal design of the pump allows a considerable amount of flexibility during implantation. Owing to the axial inflow and radial outflow of the pump, a 90 degree redirection of the blood is effected without the necessity of a flow-restrictive elbow fitting. Moreover, the pump can be rotated on its longitudinal axis to adjust the orientation of the discharge tube and minimize kinking and hydraulic losses in the vascular graft. Good anatomic compatibility is possible since the pump casing is compact and disc-shaped, fitting well between the apex of the heart and the adjacent diaphragm.

[**0077**] In a specific example although no limitation is intended, referring to **FIG. 7**, blood flow path **62***a* is 0.06 inch to 0.1 inch in thickness. The fluid gap **70** comprising the clearance between the impeller and the housing is 0.005 inch to 0.02 inch. The impeller diameter is 1.0 inch to 1.5 inch. The rotor diameter is 0.025 inch to 0.4 inch. The outside diameter of the flow annulus is 0.35 inch to 0.55 inch. The outer diameter of the housing adjacent the forward end of the pump is 0.85 inch to 1.25 inch. The axial length of the entire pump is 1.75 inch to 3.0 inch. The axial length of the rotor spindle is 1.0 inch to 1.5 inch and the axial length of the impeller is 0.2 inch to 0.5 inch. By using a thick impeller (having a long axial length) the fluid gap **70** can be larger and still provide a highly efficient pumping action.

[**0078**] Enlarged views of an impeller used in the pump of the present invention are set forth in **FIGS. 9 and 10**. Referring to **FIGS. 9 and 10**, an impeller **74** is shown therein having a number of blade sectors **76**, **78** and **80**. Blade sectors **76** and **78** are separated by slot **82**; blade sectors **78** and **80** are separated by slot **84**; and blade sectors

80 and **76** are separated by slot **86**. By utilizing blade sectors **76**, **78** and **80** that are relatively thick in the axial direction, narrow and deep impeller blood flow paths are formed by slots **82**, **84** and **86** between the adjacent edges of the blade sectors. By increasing the thickness of the blade sectors and narrowing the blood passageway, the ratio between the area of working surface of the blades and the volume of the passageway is increased. Also, the average distance of the liquid in the passageway from the working surface of the blades is decreased. Both of these beneficial results allow a small pump for blood which has less blades for potentially damaging blood, yet the small pump maintains acceptable efficiency.

[**0079**] As a specific example although no limitation is intended, the diameter of the impeller is 1 inch to 1.5 inch, the blade depth bd (**FIG. 9**) is 0.2 inch to 0.5 inch. the magnet width mw (**FIG. 9**) is 0.15 inch to 0.3 inch, the spindle diameter sd (**FIG. 9**) is 0.25 inch to 0.5 inch, and the inner diameter id (**FIG. 9**) of the impeller inlet is 0.45 inch to 0.6 inch. The width w of the slots (see **FIG. 10**) is approximately 0.075 inch and preferably ranges from 0.05 inch to 0.2 inch. The outlet angle a (**FIG. 10**) preferably ranges between 30° and 90°.

[**0080**] Another benefit of the thick impeller is the ability to utilize magnetic pieces **88** that are inserted in a manner enabling the stators to be on opposite sides of the impeller. Referring to **FIGS. 11, 11***a*, **12**, **13** and **14**, the blood pump **11**' shown therein is similar in many respects to blood pump **11** illustrated in FIGS. **1-8**, and includes housing **12** having an elongated inlet tube **13** and a scroll-shaped impeller casing or volute **14**. A discharge tube **16** extends through the housing to communicate with the interior periphery of casing **14**. Tube **16** has a tangential orientation with respect to a radius of the casing, for effectively channeling the blood output from the pump.

[**0081**] Pump rotor **17** is located within housing **12**, within casing **14**, and includes an elongated, right-circular cylindrical support shaft or spindle **18**, attached to impeller **74**. Rotor **17** is mounted for rotation about an longitudinal axis which extends both through shaft **18** and impeller **74**.

[**0082**] The magnetic bearings for levitating rotor **17** and maintaining it in proper radial alignment with respect to its longitudinal axis are not specifically shown but may be identical to those illustrated in the pump embodiment of FIGS. **1-8** and described above.

[**0083**] In the FIGS. **11-14** embodiment, a first motor stator **90**, comprising conductive coils or motor windings **91**, is located at the rear of impeller **74**. A ring of back iron **92** is located behind windings **91** and, as illustrated in **FIG. 9**, first motor stator **90** and back iron **92** are fixed between housing **12** and casing **14**.

[**0084**] A second motor stator **94**, comprising windings **95**, is positioned on the forward side of impeller **74**. As illustrated in **FIG. 11**, windings **95** are fixed to casing **14** and a ring of back iron **96** is positioned forward of windings **95**. As illustrated in **FIGS. 13, 13A** and **14**, back iron **92** and back iron **96** have teeth **98** which extend into the stator windings to form the stator iron. Thus the windings **95** wrap around the teeth **98** in the intervening slots **99** (See **FIG. 13***a*). In the **FIG. 13A** embodiment, a slotless motor stator is illustrated. In that embodiment, the windings **91** are fixed to the back iron **96** and there are no teeth extending into the stator windings.

[**0085**] It can be seen that the motor stators **90** and **94** are placed on opposite sides of casing **14** such that each is adjacent to the pole faces of the motor rotor magnets **98**. Back iron **92** and back iron **96** serve to complete a magnetic circuit. The windings **91** and **95** of the stators **90**, **94** can be in series or each stator **90**, **94** can be commutated independent of the other. There are several advantages to this approach:

[**0086**] First, as long as the pole faces of the motor rotor magnets are centered between the faces of the motor stators, the net axial force will be relatively low.

[**0087**] Second, the radial restoring force which results from the attractive force of the motor rotor magnets to the motor stators will be nearly twice as large as the restoring force with only one stator. The total volume and weight of the motor will be smaller than a single stator design.

[**0088**] Third, the dual stator design is adapted to provide system redundancy for a fail safe mode, since each stator can be made to operate independently of the other in the case of a system failure.

[**0089**] Fourth, hydrodynamic bearings can be located on the surface of the impeller to constrain axial motion and to provide radial support in the case of eccentric motion or shock on the device. Referring to **FIGS. 11 and 11***a* in particular, hydrodynamic bearings in the form of raised pads **100**, **101** and contact surfaces **102** and **103** are illustrated. Such hydrodynamic bearings are symmetrically located about the impeller as illustrated in **FIG. 13**, in which raised pads **100** are shown.

[**0090**] The raised pads could be rectangularly-shaped or wedge-shaped and are preferably formed of hardened or wear resistant materials such as ceramics, diamond coatings or titanium nitride. Alternatively, the raised pads may be formed of a different material having an alumina or other ceramic coating or insert.

[**0091**] The raised pads are carried by either the impeller or the casing, or an attachment to the casing. In the **FIGS. 11 and 11***a* embodiment, the raised pads **100** are carried by the impeller and the raised pads **101** are carried by a cup-shaped member **104** that is fastened to the casing. Cup-shaped member **104** is utilized as a reinforcement for the casing which would not be structurally stable enough to carry the raised pads itself.

[**0092**] The hydrodynamic bearings are formed by a raised pad spaced from a contact surface by the blood gap. Although at rest there may be contact between the impeller and the casing, once rotation begins each hydrodynamic bearing is structured so that during relative movement between the raised pad and the contact surface the hydrodynamic action of the fluid film produces increased pressure within the bearing gap which forces the raised pad and the contact surface apart.

[**0093**] Depending upon the location of the hydrodynamic bearings, they can aid in axial support, radial support or both axial and radial support. For example, if the bearings are perpendicular to the rotational axis, they aid primarily in axial support but if they are at an angle with respect to the rotational axis, they aid in both radial and axial support. In the embodiment of FIGS. **11-14**, the hydrodynamic bearings are positioned outside the axis of rotation, as illustrated.

[0094] In the FIGS. **15-16** embodiment, there is a single axial motor and the stator **90** is located at the rear end of impeller **74**. Stator **90** comprises windings **91**, and a ring of back iron **92** is located downstream of windings **91**. The motor stator **90** and back iron are fixed between casing **14** and housing **12**.

[0095] In the FIGS. **15-16** embodiment, a ring of back iron **106** is placed in the impeller, in axial alignment with the magnets, such that it completes the flux return path for the motor rotor magnets in the impeller. Thus while motor stator **90** and back iron **92** are located downstream of the impeller and outside of casing **12**, back iron **106** is located within the impeller and within the casing **12**. Using back iron to complete the magnetic circuit in this manner increases the overall efficiency of the motor.

[0096] Referring to the embodiment of FIGS. **17-18**, a motor stator **90** and back iron **92** are provided at the rear end of impeller **74** as with the FIGS. **9-14** embodiments, but another ring of back iron **108** is placed outside pump casing **12** on the front side of the impeller and is fixed to the casing. Back iron ring **108** serves two purposes. First, it serves to help complete the flux return path for the motor rotor magnets. Second, the attractive force between the motor rotor magnets and the ring of back iron **108** substantially reduces the net axial force produced by the attraction of the motor rotor magnets for the stator iron. Third, the ring of back iron significantly increases the radial restoring force compared to just the interaction between the motor rotor magnets and the stator iron.

[0097] Although the FIGS. **1-18** embodiments utilize an axial flux gap motor, in the FIGS. **19-20** embodiment a radial flux gap motor is utilized. To this end, a ring-shaped structure is placed on either side of the impeller to house a series of motor rotor magnets (an even number) oriented such that the magnetic poles of the motor rotor magnets are radially, and alternately, aligned. The inner diameter of the magnets is located on the surface of a ring of back iron to provide a flux return path. On the opposite end of the impeller, passive radial magnetic bearings are used.

[0098] It can be seen that in the **FIG. 19-20** embodiment the motor rotor magnets **110** are radially aligned. Radially within the motor rotor magnets **110** is a ring of back iron **112**. The inner diameter of magnets **110** are located on the surface of back iron ring **112** (see **FIG. 20**) to provide a flux return path. The motor rotor magnets **110** and ring of back iron **112** are carried by the impeller within the casing **14**. Outside of the casing **14** there is radially positioned a ring-shaped stator **114** with motor windings **116**.

[0099] A number of axial permanent magnets **120** are carried by the impeller, at its rear end. A number of axial permanent magnets **122** are fixed to the casing **14** and housing **12**, downstream of and partially offset from, magnets **120**. Magnets **120** and **122** serve as passive magnetic bearings for the impeller.

[0100] There are two significant differences from axial flux gap motors by using the radial flux gap motor. First, there is very little axial force produced by the interaction between the motor rotor magnets and the stator. Second, there is no restoring force with the radial flux gap motor. Radial support is provided by mechanical bearings or dedicated radial magnet bearings.

[0101] It will be appreciated, then, that I have provided an improved sealless blood pump including magnetic bearings and thrust bearing suspension to minimize thrombosis, and an impeller having a blood flow path therethrough which is calculated to minimize hemolysis.

[0102] Various elements from the FIGS. **1-8** embodiment can be used in the FIGS. **11-20** embodiments. For example, magnets **34** illustrated in **FIGS. 3 and 4** could be used in impeller **74** of the FIGS. **11-20** embodiments. Also, rotor **18** of the FIGS. **11-20** embodiments could be supported using front thrust bearings such as thrust bearing **41** of the FIGS. **1-8** embodiment. Various other elements may be employed in the FIGS. **11-20** embodiments from the FIGS. **1-8** embodiment.

[0103] Although illustrative embodiments of the invention have been shown and described, it is to be understood that various modifications and substitutions may be made by those skilled in the art without departing from the novel spirit and scope of the present invention.

What I claim is:

1. A sealless rotary blood pump comprising:

a pump housing;

a rotor comprising an impeller having a hydrodynamic bearing surface;

a motor including a plurality of magnets carried by said impeller and a motor stator including an electrically conductive coil located within said housing; and

hydrodynamic bearings located about the impeller.

2. The blood pump of claim 1, and further comprising a ring of back iron carried by said impeller, said back iron in axial alignment with said magnets.

3. The blood pump of claim 2, wherein said conductive coil and said back iron are fixed within said housing at rear end of said impeller in alignment with said magnets.

4. The blood pump of claim 1, wherein said magnets are radially aligned.

5. The blood pump of claim 1, and further comprising permanent magnetic bearings located at rear side of said impeller.

6. The blood pump of claim 1, wherein said impeller is comprised of a disk shaped member having an upper face portion, a lower face portion and having a plurality of blade sectors , each of said blade sectors being separated from an adjacent sector by a channel extending from said upper face portion to said lower face portions.

7. A sealless rotary blood pump comprising:

a pump housing;

an impeller;

a motor including a plurality of magnets carried by said impeller, a first motor stator including an electrically conductive coil and a second motor stator including an electrically conductive coil, said first and second motor stators located within said housing; and

a plurality of hydrodynamic thrust bearings located outside the axis of rotation of said impeller.

8. The blood pump of claim 7, and further comprising a first ring of back iron to aid in completing a flux return path for said magnets, said ring of back iron fixed within said housing rearwardly from said impeller.

9. The blood pump of claim 8, and further comprising a second ring of back iron to aid in completing a flux return path for said magnets, said second ring of back iron fixed within said housing on an opposite side of said impeller than said first ring of back iron.

10. The blood pump of claim 7, and further comprising a plurality of hydrodynamic thrust bearings located outside the axis of rotation of said impeller.

11. The blood pump of claim 7, wherein said impeller is comprised of a disk shaped member having an upper face portion, a lower face portion and having a plurality of blade sectors , each of said blade sectors being separated from an adjacent sector by a channel extending from said upper face portion to said lower face portions.

12. The blood pump of claim 11, wherein said impeller has a diameter between 1 inch and 1.5 inch.

13. The blood pump of claim 12, wherein said impeller blade depth is between 0.2 inch and 0.5 inch.

14. The blood pump of claim 13, wherein said channel has a width between 0.5 inch to 0.2 inch.

15. A sealless blood pump comprising:

a pump housing having an inlet and an outlet;

a rotor comprising an impeller having hydrodynamic bearing surfaces;

hydrodynamic bearings symmetrically located about the impeller; and

a rotor comprising a plurality of permanent magnets carried by said impeller and a motor stator located within said housing.

16. The blood pump of claim 15, and further comprising a ring of back iron carried by said impeller.

17. The blood pump of claim 16, wherein said conductive coil and said back iron are fixed within said housing at rear end of said impeller and in alignment with said permanent magnets.

18. The blood pump of claim 15, and further comprising permanent magnetic bearings located at rear side of said impeller.

19. The blood pump of claim 15, wherein said impeller is comprised of a disk shaped member having an upper face portion, a lower face portion and having a plurality of blade sectors, each of said blade sectors being separated from an adjacent sector by a channel extending from said upper face portion to said lower face portions.

20. A sealless rotary blood pump comprising:

a pump housing having an inlet and an outlet;

a rotor comprising an impeller having a hydrodynamic bearing surface;

a motor including a plurality of magnets carried by said impeller; and

a first motor stator including an electrically conductive coil and a pole piece located within said housing;

said pole piece comprising teeth extending from a ring of back iron.

21. The blood pump of claim 20, and further comprising a plurality of hydrodynamic thrust bearings.

22. The blood pump of claim 20, and further comprising permanent magnetic bearings located at rear side of said impeller.

23. The blood pump of claim 20, wherein said magnets are radially aligned.

24. The blood pump of claim 20, and further comprising a second motor stator including an electrically conductive coil, said first and second motor stators located within said housing and on opposite sides of said impeller.

25. The blood pump of claim 20, and further comprising a ring of back iron disposed within said housing, said back iron in alignment with and completing a flux return path for said permanent magnets.

26. The blood pump of claim 20, and further comprising hydrodynamic bearings symmetrically located about the impeller.

* * * * *