Design Concepts and Principle of Operation of the HeartWare Ventricular Assist System

Jeffrey A. LaRose, Daniel Tamez, Michael Ashenuga, and Carlos Reyes

Implantable left ventricular assist devices provide circulatory support for patients at risk of death from refractory, end-stage heart failure. Rotary blood pumps have been designed for increased reliability and smaller size for use in a broader population of patients than the first-generation pulsatile devices. The design concepts and principle of operation of the HeartWare System are discussed. The HeartWare Ventricular Assist System (HVAD) is a small centrifugal flow pump with a displacement volume of 50 ml and an output capacity of 10 L/min. A unique wide-blade impeller is suspended by hybrid passive magnets and hydrodynamic forces. An integrated inflow cannula is inserted into the left ventricle and is held in position by an adjustable sewing ring; the pump is positioned in the pericardial space. The 10-mm outflow graft is anastomosed to the ascending aorta. External system components include the microprocessor-based controller, a monitor, lithium-ion battery packs, alternating current and direct current power adapters, and a battery charger. Physiologic control algorithms are incorporated for safe operation. Preclinical life cycle tests have shown the HVAD to be highly reliable. This system design offers reliability, portability, and ease of use for ambulatory patients. *ASAIO Journal* 2010; 56:285–289.

Original design specifications for implantable left ventricular assist devices (LVADs) required that they be functionally similar to the native left ventricle. These specifications resulted in the development of pulsatile devices that could provide flow rate, stroke volume, and left ventricular dP/dT within the normal physiologic range. First-generation pulsatile devices have improved survival rates and quality of life for thousands of heart failure patients.[1–3] However, large pulsatile devices have been associated with persistent complications, including infection, bleeding, thromboembolism, and device failure, which limit effectiveness and use as long-term support.[4–7] The large blood-contacting surface area of these devices and external exit sites for cannulas and drivelines also contribute to the high associated incidence of infection.[8–11] Pump-pocket infection is commonly associated with this generation of devices because of their size and movement within the pocket. In addition, extensive surgery and cardiopulmonary bypass are required for implantation, which contributes to morbidity.

From the HeartWare, Inc., Miami Lakes, Florida.

Submitted for consideration January 2010; accepted for publication in revised form March 2010.

Presented at the Annual ASAIO 54th Annual Conference, June 19–21, 2008, San Francisco, CA.

Reprint Requests: Daniel Tamez, BS, HeartWare, Inc., 14000 NW 57th Court, Miami Lakes, FL 33014. Email: dtamez@heartwareinc.com.

DOI: 10.1097/MAT.0b013e3181dfbab5

In the early 1990s, inventors began developing smaller, continuous-flow devices using axial and centrifugal flow technology to reduce the complications associated with pulsatile designs.[12] These devices are not only smaller but also contain fewer moving parts to improve durability. To date, the new continuous-flow LVADs have performed well in clinical trials, and some of these devices are commercially available for recovery, bridge to transplant, and destination therapy.[13,14] Although continuous flow technology shows great promise, areas for improvement remain to meet safety and efficacy demands of a large-scale primary treatment of New York Heart Association (NYHA) class III or class IV heart failure patients.

HeartWare, Inc. (Miami Lakes, FL) has recently introduced an implantable, continuous-flow mechanical circulatory support system that is designed to provide left ventricular support for patients with end-stage heart failure. The HeartWare System features the small HeartWare Ventricular Assist System (HVAD) pump that utilizes a hybrid hydromagnetic impeller suspension system that eliminates friction, heat generation, and component wear. The small size of the HVAD and its integral inflow cannula allow for placement at the cardiac apex within the pericardial space. In this article, we describe the design and principles of operation of this system.

System Description

The HeartWare System consists of an implantable centrifugal flow pump (HVAD), an external controller, and external power sources. A wide-blade impeller with a hybrid suspension system uses passive magnetic and hydrodynamic thrust bearings to create a contact-free rotation of the impeller. The pump is surgically positioned in the pericardial space with the integrated inflow cannula in the left ventricle (**Figure 1**). Blood from the left ventricle enters the pump through the inflow cannula and exits through a 10-mm outflow graft that is attached to the ascending aorta. The maximum flow rate is 10 L/min. The pump is connected to external system components by a driveline that is tunneled subcutaneously and exits the patient's abdominal wall. A controller operates the pump, regulates power, monitors system performance, and displays alarm notifications. A carrying case for the controller may be worn on a belt or over the shoulder. The system can be powered by three ways: a pair of rechargeable direct current (DC) lithium-ion batteries, alternating current (AC) power from an electrical wall outlet, or a 12-
safety, two sources of power are
displays pump performance, is us
operating parameters, and provides
from the controller.

Exhibit
2025
01/15/2026

Copyright © American Society of Artificial Internal Organs. Unauthorized reproduction of this article is prohibited.

Abbott v. Miracor, IPR2025-00112
Miracor Ex. 2025, p. 1 of 5

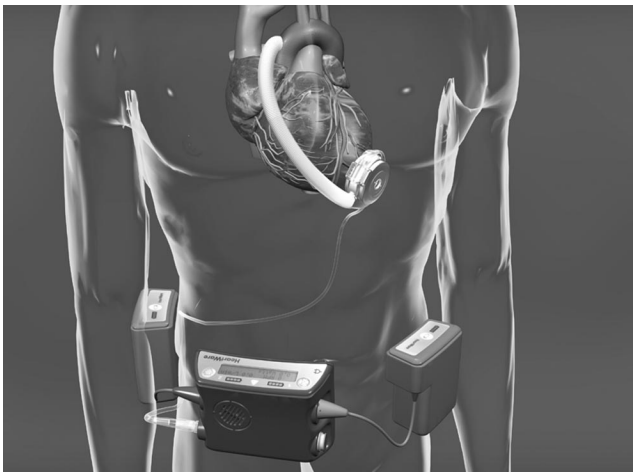

Figure 1. The internal components of the HeartWare system include the blood pump, a 10-mm outflow graft, and the percutaneous driveline. The external components, which may be worn on a belt or carried over the shoulder, include the controller and a pair of lithium-ion batteries.

Additional components include a battery charger and a surgical tools kit. The surgical tools kit comprised a torque wrench, an apical coring, a hex driver, a driveline cap, and a driveline tunneler.

Implantable Components

The HVAD pump is small (displaced volume, 50 ml; weight, 145 g) and incorporates a short inflow cannula to allow for placement at the apex of the left ventricle. The pump has three main parts: 1) a front housing with an integrated inflow cannula, 2) a rear housing with a magnetic center-post, and 3) the rotating impeller (**Figure 2**). Front and rear housings are hybrid titanium-ceramic assemblies; each contains a hermetically sealed motor stator. Dual motor stators enhance system efficiency and provide power redundancy to rotate the impeller.

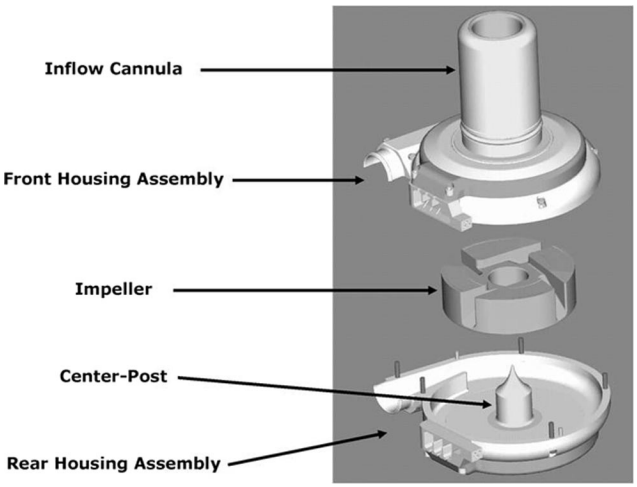

Figure 2. Three main assemblies of the HVAD pump: 1) front housing with integrated inflow cannula, 2) rear housing and center-post, and 3) wide-blade suspended impeller. HVAD, HeartWare ventricular assist system.

The wide-bladed impeller is designed to accommodate four large rare-earth motor magnets, which allow for short axial height and high motor efficiency. The impeller also contains a separate stack of three rare-earth magnets with like poles together as part of the impeller suspension system. A corresponding magnetic stack contained within the center-post develops strong repulsive magnetic forces to maintain impeller radial support. Vertical alignment of the magnetic stack within the center-post is shifted downward relative to the impeller magnetic stack to develop an axial magnetic force to keep the impeller toward the front housing. When the pump is turned on, the impeller rotates, and lift is created by the hydrodynamic thrust bearings pushing the impeller away from the front housing. A fluid (blood) barrier maintains a gap between the impeller and the front housing. A short inflow cannula (25-mm long; 21-mm outer diameter) is fabricated of smooth titanium and contains a silicone O-ring to ensure a seal with the sewing ring. An apical sewing ring constructed of titanium and Dacron polyester secures the pump inflow cannula in position with the aid of a torque wrench. The inner portion of the metallic sewing ring is a C-clamp that can be adjusted by turning a screw inside the clamp to secure the base of pump's inflow cannula for optimal placement of the inflow cannula. The driveline cable is composed of six individually insulated, stranded, fatigue-resistant MP35N alloy cables each encased within a silicon lumen with an abrasion resistant outer sheathing. The driveline is 4.2 mm in diameter, and portions of the implanted part are covered with woven Dacron polyester to encourage tissue ingrowth at the skin exit site. The outflow conduit is a 10-mm zero porosity gelatin-impregnated graft (Vascutek Gelweave, Terumo Cardiovascular Systems Corporation, Ann Arbor, MI) that is encased proximally by an articulating strain relief made of plastic interlocking vertebra links to prevent any outflow graft kinking.

External Components

The microprocessor-based controller (13.34 cm × 10.4 cm × 5.08 cm) weighs 0.362 kg and is connected to the implanted blood pump by the percutaneous driveline. The controller operates the pump, manages power sources, monitors pump function, provides diagnostic information, and stores pump parameter data. The controller automatically identifies the AC or DC power source, and an indicator symbol illuminates to inform the operator which source is being used. Two battery power indicator lights provide estimates of the percent of total power remaining in the attached rechargeable battery packs. An internal, nonreplaceable, rechargeable battery within the controller provides an audible alarm if all power is lost. A two-line liquid crystal display on the controller continuously displays the pump speed, pump flow rate, and power consumption. During alarm conditions, the two-line display describes the alarm condition and the actions to be taken. The controller scroll button illuminates the display and allows navigation between the pump parameter display and active alarm condition. Alarm indicator lights (solid yellow, flashing yellow, and flashing red) and audible alarms alert users to priorities of alarm conditions. Low- and medium-priority audible alarms can be silenced for 5 minutes; high-priority audible alarms cannot be silenced. The controller contains nonvolatile flash memory for up to 30 days of storage

Abbott v. Miracor, IPR2025-00112
Miracor Ex. 2025, p. 2 of 5

Copyright © American Society of Artificial Internal Organs. Unauthorized reproduction of this article is prohibited.

Figure 3. The monitor is a tablet PC with touch screen function. The monitor is used during system initiation, during the immediate postoperative time, and during routine checks or troubleshooting for ambulatory patients.

of operating parameters and alarm and event information. If a driveline fault condition is detected, the controller switches from normal dual motor stator operation to single motor stator operation without loss of support.

The monitor is a touch screen, tablet computer that displays system performance information and allows for adjustment of system operating parameters (**Figure 3**). The monitor is intended for use during initial setup at implant, through an immediate postoperative period when changes in pump parameters are expected, and for ambulatory support when collecting operating parameter data or troubleshooting. The monitor is powered by an AC outlet, whereas an internal battery provides power for up to 2 hours during patient transport. An operator can select from four different display options ("screens"). A "clinical screen" displays operating parameters, power, and flow waveforms. The clinical screen is the "home screen" and is used when pump adjustments are not required. A "trend screen" provides a graphical display of pump operating parameters over varying time intervals. An "alarm screen" provides details of alarm conditions (e.g., an alarm log, the alarm condition time, and pump parameters during alarm). The "system screen" is password protected and is used to change system operating parameters that are stored in the controller (e.g., pump speed setting, alarm limits, blood viscosity setting, and suction detection).

The system requires connection to two power sources at all times: two battery packs or one battery pack and either an AC or DC power adapter. When patients are not ambulatory, the AC power adapter can provide power from an electrical wall outlet (110–250 V). When patients are ambulatory or are being transported, a pair of rechargeable lithium-ion battery packs can provide power to the system. A DC power adapter can provide power from a 12-V DC outlet such as an automobile power outlet.

Each of the lithium-ion batteries (9.8 cm × 8.9 cm × 4.5 cm) weighs 0.47 kg. Depending on operating parameters, two batteries can power the system for up to 12 hours. Batteries are recharged in a battery charger unit with four receptacles, ensuring that at least two charged batteries are always available for use. The low-battery alarm on the controller alerts the user when a battery needs to be replaced and charged. A light-emitting diode indicator on the batteries displays the percentage of charge remaining on a battery. Batteries drain sequentially, allowing for battery change without interrupting pump operation.

Principles of Operation

The rotating impeller forces blood through the pump by using hydrodynamic and centrifugal forces. The net effect of impeller rotation is increased blood pressure and flow from the inlet to the outlet. Energy to rotate the impeller is provided through electromagnetic coupling between permanent motor magnets enclosed within the impeller and the motor stators located in front and rear pump housings. Each motor stator consists of six copper wire coils that are sequentially charged by electrical current, creating an electromagnetic force that rotates the impeller. These electromagnets have the effect of dragging the motor magnets (and impeller) around an axis of rotation at an adjustable speed ranging from 1,800 to 4,000 RPM. The amount of blood flow through the pump at a constant impeller rotational speed is determined by the differential pressure across the pump. The difference between preload (left ventricular pressure) and afterload (aortic pressure) is the most

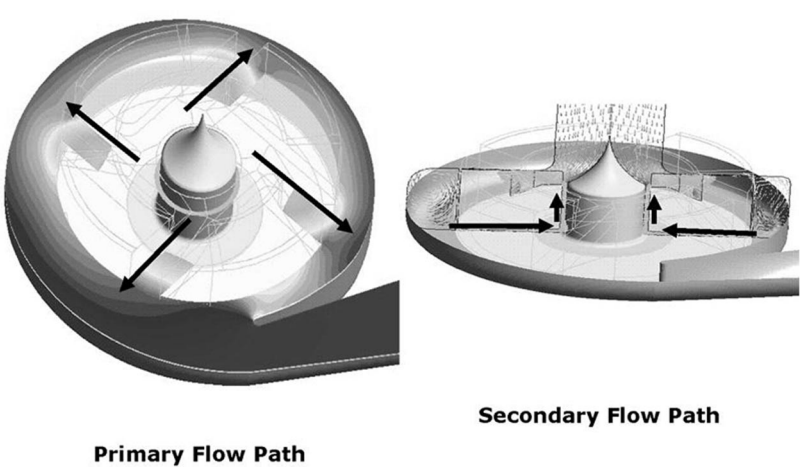

Figure 4. Computational fluid dynamics analysis used to characterize flow patterns in the pump. Primary and secondary flow pathways are indicated by arrows. The tertiary pathway on top of the impeller is not shown.

Abbott v. Miracor, IPR2025-00112
Miracor Ex. 2025, p. 3 of 5

Copyright © American Society of Artificial Internal Organs. Unauthorized reproduction of this article is prohibited.

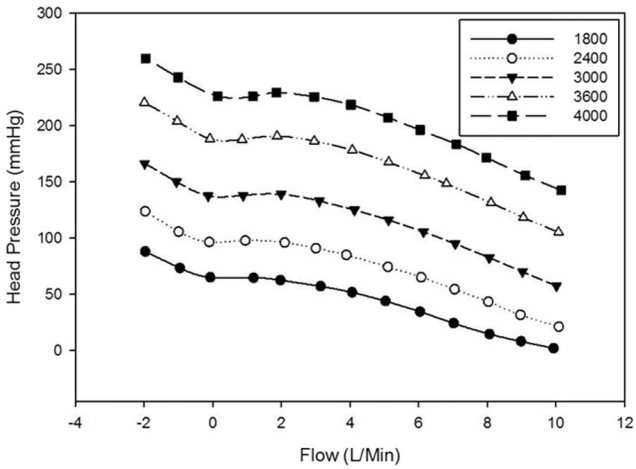

Figure 5. Flow-pressure (HQ) curve for the pump at a constant blood viscosity of 2.5 cP during the entire range of operating speeds. This HQ curve is used to estimate blood flow.

important hemodynamic parameter affecting blood flow through the pump.

Computational fluid dynamics (CFD) analysis was performed to characterize the global and local flow conditions within the pump. Computational fluid dynamics analysis demonstrated three flow paths (**Figure 4**). The primary flow path is through the inflow cannula and into four impeller flow channels after which blood is collected in the housing and exits the pump through the outflow graft. The secondary flow path starts under the impeller and goes upward through the annular gap between the impeller and the center-post and then re-enters the primary flow path. The tertiary flow path starts at the impeller slots and leads to the hydrodynamic thrust bearings at the top of impeller where blood re-enters the primary flow path and exits the pump outlet.

Head pressure (H) and flow (Q) curve correlates the amount of blood flow that can be generated by the pump at any rotation per minute (RPM) across a wide range of pressures (**Figure 5**). As with all rotary blood pumps, higher flow rates are achieved with lower pressure differentials across the pump. A higher preload and lower afterload will result in higher flow rates at any given impeller speed. Actual flow through a pump will vary with changes in pressure generated by the ventricle's systolic and diastolic cycles. As the differential pressure changes, motor current also changes.

A current-flow (IQ) curve is used to estimate instantaneous and average flow through the pump. Estimated flow is computed with values for pump speed and motor current. The default blood viscosity setting is 2.7 cP, and the adjustable range is 2.2–4.3 cP, which is adjusted by the operator according the patients' measured hematocrit. Viscosity and motor stator configuration (dual or single stator mode) determines the active IQ curve used to calculate estimated flow. Speed and current are exponentially averaged. Exponentially averaged speed is used to determine the closest reference speeds. Reference speeds and the exponentially averaged current are used to determine the current and flow values from the active IQ curve. Average and bounding reference speeds, average and bounding current, and flow values are used in a 3-point interpolation formula to estimate flow. Blood viscosity is dependent on many factors, including shear stress, patient hydration and diet, and hematocrit. These factors may change with time for any given patient. Therefore, flow estimation is based on the electrical current, impeller RPM, and a fixed viscosity value. The operator can adjust the viscosity value based on the patient's hematocrit.

The suction detection algorithm monitors the estimated flow waveforms for a sudden decrease in instantaneous flow (**Figure 6**). The algorithm establishes a baseline estimated flow by continuously averaging the minimum estimated flow, which is then recalculated every 2 seconds. Proper function of the suction detection function requires that there is a period of normal operation to establish the baseline value. If the baseline value is not properly established, the suction event alarm will not function. In addition, the baseline instantaneous flow rate must exceed 1.8 L/min. The suction trigger value is established at 40% below the estimated flow baseline, and an alarm results when the baseline flow exceeds this limit for 10 seconds. When the suction detection trigger point is reached and an alarm occurs, this flow trigger value is used with an offset value to establish the suction clear limit. The alarm is cleared when the estimated flow baseline exceeds the suction clear limit for 20 seconds. The suction detection function is enabled by the operator and will be disabled whenever there is a change in

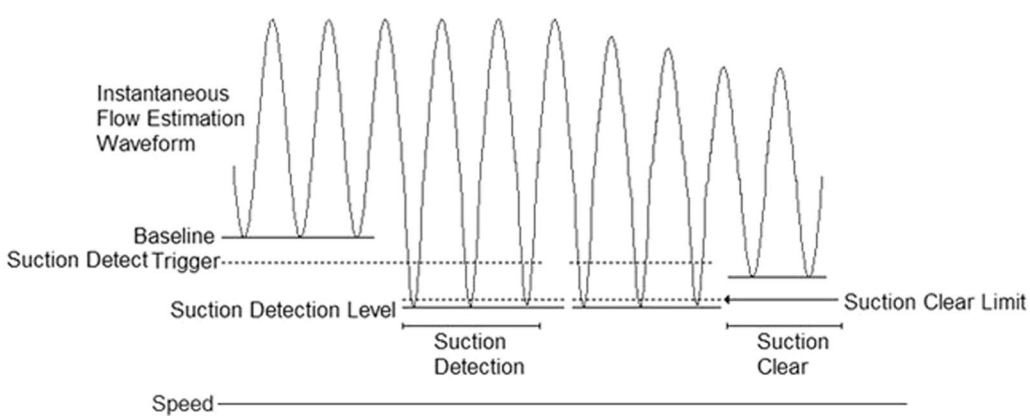

Figure 6. Graphical representation of the suction detection algorithm for the pump.

Abbott v. Miracor, IPR2025-00112
Miracor Ex. 2025, p. 4 of 5
Copyright © American Society of Artificial Internal Organs. Unauthorized reproduction of this article is prohibited.

the set pump speed or a change in the viscosity input value. The operator must re-enable the suction detection alarm.

A cyclic controlled speed change function (Lavare Cycle) allows for changes in left ventricular filling and flow rate through the LVAD once per minute during a 3-second cycle. The amount of impeller rotational speed change is fixed at 200 RPM, which is adequate to allow some increase of ventricular volume but is not low enough to cause left ventricular distension and low cardiac output. The impeller rotational speed decreases below the set speed by 200 RPM for 2 seconds, then increases 400 RPM (200 RPM above the set speed) for 1 second, and then returns to the set point. The cyclic controlled speed change will only operate between 2000 and 3800 RPM with low and high limits of speed change at 1800 and 4000 RPM, respectively.

The changes in ventricular volume and pump flow during the cyclic controlled speed change are intended to decrease potential areas of blood stasis. This feature is controlled by the clinician and is used when patients are hemodynamically stable.

Comments

The HeartWare system has evolved with design concepts that are intended to provide safe, long-term left ventricular support in a wide range of patient sizes. The pump impeller design accommodates large magnets and a passive impeller suspension system, allowing contact-free operation and small size. The small size of the pump along with an integrated inflow cannula and novel sewing ring has enabled placement of the pump in the pericardial space. Intrapericardial placement of the pump may help to reduce postimplant complications. The external components are designed to allow mobility and to be easily operated by patients.

References

1. Long JW, Kfoury AG, Slaughter MS, *et al*: Long-term destination therapy with the HeartMate XVE left ventricular assist device: improved outcomes since the REMATCH study. *Congest Heart Fail* 11: 133–138, 2005.
2. Frazier OH, Rose EA, Oz MC, *et al*: Multicenter clinical evaluation of the HeartMate vented electric left ventricular assist system in patients awaiting heart transplantation. *J Thorac Cardiovasc Surg* 122: 1186–1195, 2001.
3. Portner PM, Jansen PG, Oyer PE, *et al*: Improved outcomes with an implantable left ventricular assist system: a multicenter study. *Ann Thorac Surg* 2001; 71: 205–209, 2001.
4. Costantini TW, Taylor JH, Beilman GJ: Abdominal complications of ventricular assist device placement. *Surg Infect (Larchmt)* 6: 409–418, 2005.
5. Thomas CE, Jichici D, Petrucci R, *et al*: Neurologic complications of the Novacor left ventricular assist device. *Ann Thorac Surg* 72: 1311–1315, 2001.
6. Myers TJ, Khan T, Frazier OH: Infectious complications associated with ventricular assist systems. *ASAIO J* 46: S28–S36, 2000.
7. Livingston ER, Fisher CA, Bibidakis EJ, *et al*: Increased activation of the coagulation and fibrinolytic systems leads to hemorrhagic complications during left ventricular assist implantation. *Circulation* 94: II227–II234, 1996.
8. Monkowski DH, Axelrod P, Fekete T, *et al*: Infections associated with ventricular assist devices: epidemiology and effect on prognosis after transplantation. *Transpl Infect Dis* 9: 114–120, 2007.
9. Holman WL: Microbiology of infection in mechanical circulatory support. *Int J Artif Organs* 30: 764–770, 2007.
10. Simon D, Fischer S, Grossman A, *et al*: Left ventricular assist device-related infection: treatment and outcome. *Clin Infect Dis* 40: 1108–1115, 2005.
11. Holman WL, Park SJ, Long JW, *et al*: Infection in permanent circulatory support: experience from the REMATCH trial. *J Heart Lung Transplant* 23: 1359–1365, 2004.
12. Mesana TG: Rotary blood pumps for cardiac assistance: a "must"? *Artif Organs* 28: 218–225, 2004.
13. Slaughter MS, Rogers JG, Milano CA, *et al*: Advanced heart failure treated with continuous-flow left ventricular assist device. *N Engl J Med* 361: 2241–2251, 2009.
14. Pagani FD, Miller, LW, Russell, SD, *et al*: Extended mechanical circulatory support with a continuous-flow rotary left ventricular assist device. *J Am Coll Cardiol* 54: 312–321, 2009.

Copyright © American Society of Artificial Internal Organs. Unauthorized reproduction of this article is prohibited.