UNITED STATES PATENT AND TRADEMARK OFFICE

BEFORE THE PATENT TRIAL AND APPEAL BOARD

ABBOTT LABORATORIES,

Petitioner,

v.

MIRACOR MEDICAL SA,

Patent Owner.

IPR2025-00112
U.S. Patent 11,351,357

PATENT OWNER MIRACOR MEDICAL SA'S MOTION TO EXCLUDE EVIDENCE

Pursuant to 37 C.F.R. § 42.64(c), Patent Owner hereby moves to exclude Dr. Wieselthaler's and Mr. Crosby's inadmissible testimony presented in paragraphs 50-83 of Exhibit 1041, in paragraphs 59-66, 69, and 82-95 of Exhibit 1042, and on page 73 (lines 3-16), page 78 (lines 2 and 5-19), page 79 (lines 15-19), pages 80 (line 6) to 81 (line 3), pages 81 (line 24) to 82 (line 6), pages 82 (line 18) to 83 (line 19), and pages 84 (line 15) to 85 (line 7) of Exhibit 2028, as well as inadmissible Exhibits 1015, 1038, 1044, 1046, 1049, and 1050 upon which that testimony is based. Patent Owner makes this motion to preserve objections previously made in the record. *See* Paper 15 at 8; Paper 25 at 5-11; Ex. 2028 at 73:17-18, 78:3-4, 78:20-21, 79:20-21, 80:2-3, 81:4-6; 81:22-23, 82:7-8, 82:13-14, 83:20-22, 84:9-12, 85:8-10.

Dr. Wieselthaler's and Mr. Crosby's rebuttal opinions regarding the obviousness of the challenged claims are based *not* upon the printed prior art that formed the basis of the Petition and the Board's Institution Decision (namely, Exhibits 1005-1008) but, rather, upon physical devices that are statutorily excluded from the scope of inter partes review. 35 U.S.C. § 311(b). This evidence is inadmissible and should be excluded.

A. <u>This IPR Must Be Based on Only Printed Prior Art</u>

"A petitioner in an inter partes review may request to cancel as unpatentable 1 or more claims of a patent . . . ***only on the basis of prior art consisting of patents or printed publications***." *Id.* (emphasis added). In view of this limitation, the Petition asserted unpatentability of the challenged claims based on four printed prior art references: Schima (Ex. 1005), Akamatsu-1999 (Ex. 1006), Bourque-2001 (Ex. 1007), and Wampler (Ex. 1008). *See* Paper 1 at 6; Paper 13 at 7. Based on the record presented during the preliminary proceeding, the Board instituted trial to determine whether the challenged claims would have been obvious to a person of ordinary skill in the art ("POSA") in light of those same four printed prior art references. Paper 13 at 42-43.

One of the critical questions to be decided by the Board in this trial is whether the POSA would or would not have been motivated to implant the pump of Bourque-2001 (Ex. 1007) at the apex of the heart in view of Wampler (Ex. 1008), as asserted in Petitioner's Ground 2. *See* Exhibit 2029 (citing relevant passages from the Petition and Exhibit 1003). Patent Owner has presented testimony from two experts, Mr. Boris Leschinsky and Dr. Robert Gallegos, explaining why the POSA would not have been motivated to make the proposed modification based on the teachings of the prior art. *See* Ex. 2015 at ¶¶ 120-156;

Ex. 2017 at ¶¶ 42-69; *see also* Paper 20 at 26-42 (discussing this testimony); Paper 31 at 14-26 (same).

B. Dr. Wieselthaler's and Mr. Crosby's Rebuttal Opinions Are Based on Physical Devices, Not the Printed Prior Art

Petitioner's witness, Dr. Wieselthaler, also purports to testify regarding whether the POSA "would have been motivated with a reasonable expectation of success to modify [Bourque-2001's] HeartMate III 'inflow subassembly' (Ex.1007) to serve as the 'inflow cannula…placed into the apex of the left ventricle' as taught by Wampler (Ex.1008, [0075])." Ex. 1041 at ¶ 45. Rather than focus on how a POSA would understand the actual disclosures of Bourque-2001 and Wampler, however, Dr. Wieselthaler instead testifies at length regarding various physical devices allegedly known to the POSA around the time of the invention: the HeartWare HVAD, the Terumo DuraHeart, the Ventracor VentrAssist, the MicroMed DeBakey, the Jarvik-2000, and a 2006 Bourque redesign. *Id.* at ¶¶ 50-83.[1] Mr. Crosby also relies heavily upon the characteristics of these physical devices in his rebuttal testimony. Ex. 1042 at ¶¶ 59-66, 69, 82-95.

[1] Dr. Wieselthaler attempted to expand upon this improper testimony on redirect after his cross-examination. *See* Ex. 2028 at 73:3-16, 78:2, 78:5-19, 79:15-19, 80:6–81:3, 81:24–82:6, 82:18–83:19, 84:15–85:7.

But these devices are not part of any ground at issue in this trial, nor could they be. 35 U.S.C. § 311(b).

Exhibits 1015, 1038, 1044, 1046, 1049, and 1050 each relate to these physical devices. Exhibits 1015 and 1038 purport to be a journal abstract relating to the HeartWare HVAD, Exhibit 1044 appears to be a press release regarding that device's implantation, and Exhibit 1049 is a 2021 paper describing Dr. Wieselthaler's experiences with HeartWare. Exhibits 1046 and 1050 are asserted to be journal articles describing use of the Terumo DuraHeart and of the MicroMed DeBakey, respectively.

Dr. Wieselthaler tried to link two of these physical devices to the printed prior art asserted in this IPR, but these attempts fell apart during his cross-examination. First, he testified that "the development of the **HeartWare HVAD** progressed from the design disclosed in [FIG. 13 of] **Wampler**." Ex. 1041 at ¶ 53 (emphasis added); *see also id.* at ¶¶ 75-76. When faced with the evidence reproduced below, however, Dr. Wieselthaler had to admit that the pump shown in FIG. 13 of Wampler and the HeartWare HVAD were different pumps:

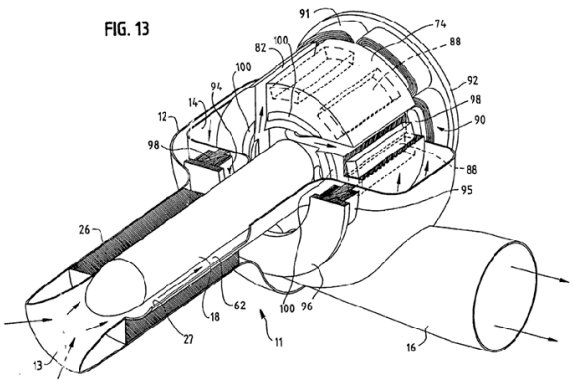	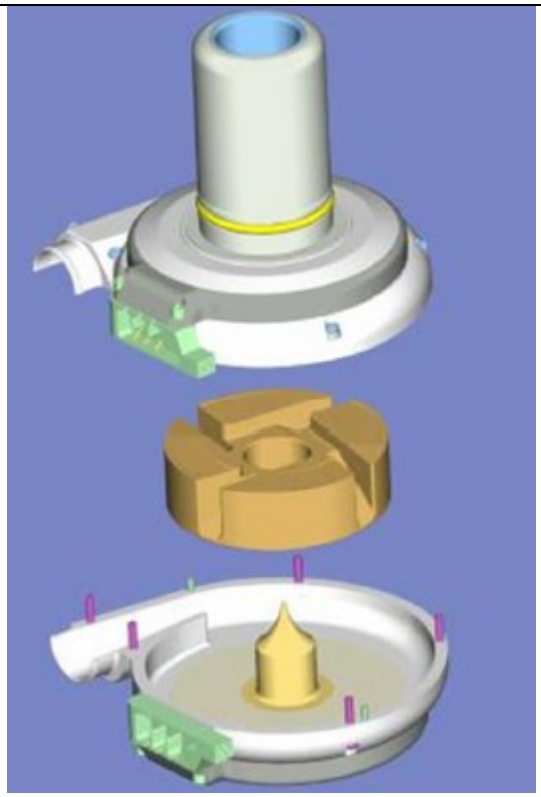
Ex. 1041, ¶ 53 (Wampler FIG. 13)	Ex. 2024, 51 (HeartWare HVAD)

Ex. 2028, 54:13–57:15, 58:3–58:10 (Wampler embodiment "never came into existence").

Second, Dr. Wieselthaler testified that **Akamatsu's** "pump . . . became the **DuraHeart**." Ex. 1041 at ¶ 63 (emphasis added); *see also id.* at ¶ 77. During cross-examination, however, he agreed that the DuraHeart pump was an altered version of the Akamatsu pump—set up for implantation in a preperitoneal pocket with a perpendicular inflow tube exactly like the similarly sized Bourque-2001 pump:

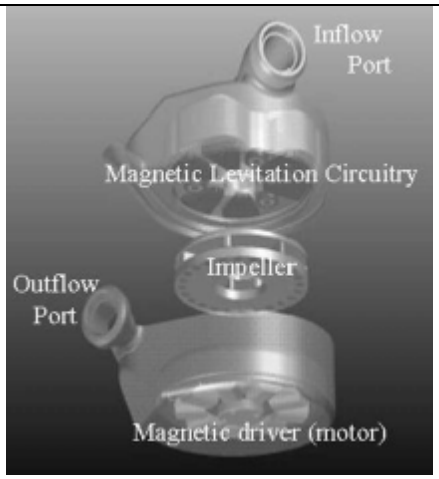 	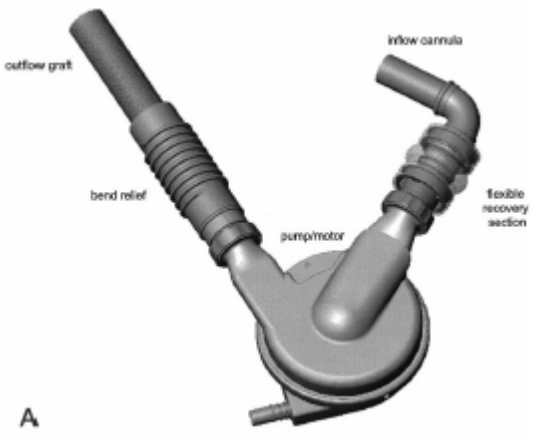
Ex. 2026, 1423 (FIGS. 1, 3)	Bourque-2001, Fig. 1(A)

Ex. 2028, 38:23–40:21 (when asked about implantation of DuraHeart at the apex of the heart, responding "it was definitely too big").

Dr. Wieselthaler's admissions on cross-examination also undercut Mr. Crosby's similar attempts to rely on: (a) the HVAD as embodying Wampler, and (b) the DuraHeart as embodying Akamatsu-1999. *See* Ex. 1042 at ¶¶ 59-66, 84, 88, 89.

C. **The Physical Device Evidence Is Inadmissible**

Since physical devices—like the ones described in Exhibits 1015, 1038, 1044, 1046, 1049, and 1050, and which form the basis for Dr. Wieselthaler's and Mr. Crosby's rebuttal opinions expressed in paragraphs 50-83 of Exhibit 1041, in paragraphs 59-66, 69, and 82-95 of Exhibit 1042, and on pages 78–85 of Exhibit 2028—cannot be the basis of an IPR, this evidence has no tendency to make any fact of consequence in this trial more or less probable. Fed. R. Evid. 401. As such, it is irrelevant and not admissible. Fed. R. Evid. 402. Lacking any relevance, this evidence also presents substantial danger of confusing the issues, causing undue delay, and wasting time in this trial—and should therefore be excluded. Fed. R. Evid. 403.

Additionally, Dr. Wieselthaler's and Mr. Crosby's testimony based on physical devices that are not (and cannot be) the basis of this IPR—rather than the printed prior art upon which the Board instituted this trial—are not "based on sufficient facts[,] the product of reliable principles and methods[, or] "a reliable application of the principles and methods to the facts of the case." Fed. R. Evid. 702. Here, the "facts of the case" are the disclosures of Exhibits 1005-1008, and the issue presented is what a POSA would have understood from those disclosures at the time of the invention. Dr. Wieselthaler's and Mr. Crosby's rebuttal opinions

based on irrelevant physical devices do not reliably shed any light on that question and should be excluded.

D. Conclusion

For the reasons stated above, the Board should exclude Exhibits 1015, 1038, 1041 (at ¶¶ 50-83), 1042 (at ¶¶ 59-66, 69, 82-95), 1044, 1046, 1049, 1050, and 2028 (at 73:3-16, 78:2, 78:5-19, 79:15-19, 80:6–81:3, 81:24–82:6, 82:18–83:19, 84:15–85:7) from this trial.

Respectfully submitted,

Date: February 3, 2026

/ Joshua P. Larsen /

Joshua P. Larsen
Reg. No. 62,761

Lead Counsel for Patent Owner
Miracor Medical SA

Barnes & Thornburg LLP
11 South Meridian Street
Indianapolis, Indiana 46204
Telephone: (317) 231-6422
Facsimile: (317) 231-7433
E-mail: joshua.larsen@btlaw.com

CERTIFICATE OF SERVICE

Under 37 C.F.R. § 42.6(e), the undersigned certifies that on this 3rd day of February 2026, I caused a true and correct copy of the foregoing PATENT OWNER MIRACOR MEDICAL SA'S MOTION TO EXCLUDE EVIDENCE, together with all exhibits filed therewith, to be served via e-mail on the following counsel of record for Petitioner:

Scott M. Border
sborder@winston.com
Charles B. Klein
cklein@winston.com
Saranya Raghavan
sraghavan@winston.com
Nimalka R. Wickramasekera
nwickramasekra@winston.com

/ Joshua P. Larsen /
Joshua P. Larsen
Reg. No. 62,761

Lead Counsel for Patent Owner
Miracor Medical SA