US006589030B2

(12) **United States Patent**
Ozaki

(10) **Patent No.: US 6,589,030 B2**
(45) **Date of Patent: Jul. 8, 2003**

(54) **MAGNETICALLY LEVITATED PUMP APPARATUS**

(75) Inventor: **Takayoshi Ozaki**, Iwata (JP)

(73) Assignees: **NTN Corporation**, Osaka (JP); **Terumo Kabushiki Kaisha**, Tokyo (JP)

(*) Notice: Subject to any disclaimer, the term of this patent is extended or adjusted under 35 U.S.C. 154(b) by 210 days.

(21) Appl. No.: **09/883,221**

(22) Filed: **Jun. 19, 2001**

(65) **Prior Publication Data**

US 2001/0053330 A1 Dec. 20, 2001

(30) **Foreign Application Priority Data**

Jun. 20, 2000 (JP) 2000-184410
Jun. 20, 2000 (JP) 2000-184411
Jul. 10, 2000 (JP) 2000-207835
Jul. 10, 2000 (JP) 2000-207837

(51) **Int. Cl.**[7] **F04B 17/00**
(52) **U.S. Cl.** **417/420**; 417/44.1
(58) **Field of Search** 417/420, 44.1, 417/45, 410.1, 423.4, 423.7, 423.12; 415/230, 900; 600/3, 16, 151; 327/552, 556

(56) **References Cited**

U.S. PATENT DOCUMENTS

4,688,998 A * 8/1987 Olsen et al. 417/356
5,725,357 A * 3/1998 Nakazeki et al. 417/18
5,911,558 A * 6/1999 Nakazeki et al. 415/118
6,015,275 A * 1/2000 Suzuki et al. 417/423.12
6,129,660 A * 10/2000 Nakazeki et al. 600/17
6,259,178 B1 * 7/2001 Suzuki et al. 310/90.5
6,264,635 B1 * 7/2001 Wampler et al. 604/151
6,368,075 B1 * 4/2002 Fremerey 417/365
6,394,769 B1 * 5/2002 Bearnson et al. 417/423.7
6,398,524 B1 * 6/2002 Taira et al. 417/398
6,435,847 B2 * 8/2002 Kubo et al. 417/423.4
6,468,041 B2 * 10/2002 Ozaki 417/44.1
6,527,699 B1 * 3/2003 Goldowsky 600/16

* cited by examiner

Primary Examiner—Teresa Walberg
Assistant Examiner—Vinod D. Patel
(74) *Attorney, Agent, or Firm*—McDermott, Will & Emery

(57) **ABSTRACT**

A power supply feeds a dc voltage to an operational amplifier at an inverting input while a motor current command value is input to the operational amplifier at a non-inverting input and when a dc voltage being supplied to a power amplifier varies the operational amplifier responds to the voltage variation by adjusting the motor current command value to alter a control signal applied to a motor control circuit and thus reduce revolution-rate variation.

17 Claims, 12 Drawing Sheets

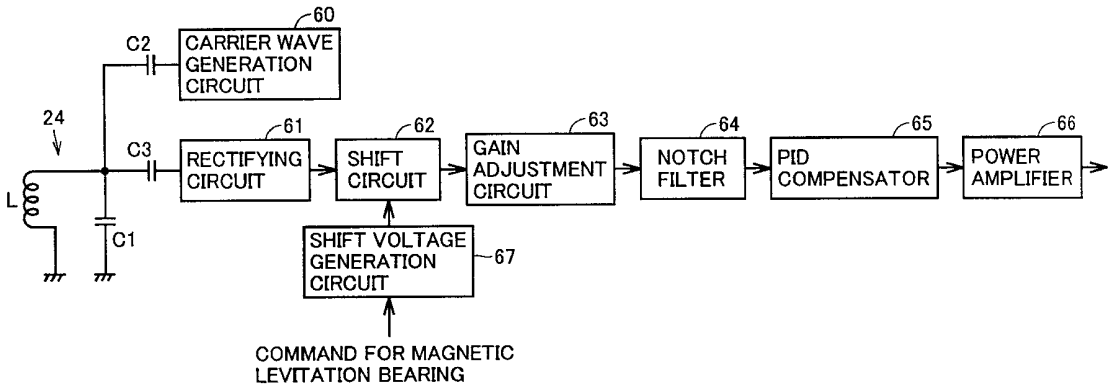

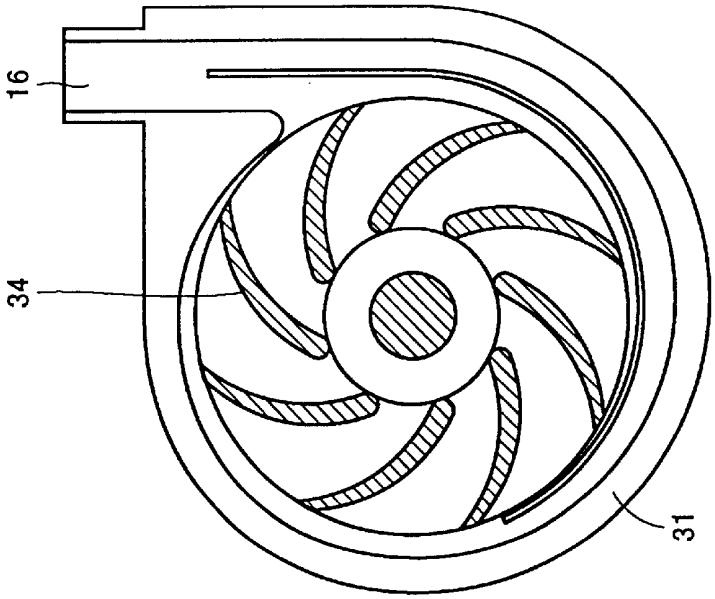
16
34
31
CROSS SECTION ALONG IB–IB

FIG.1B

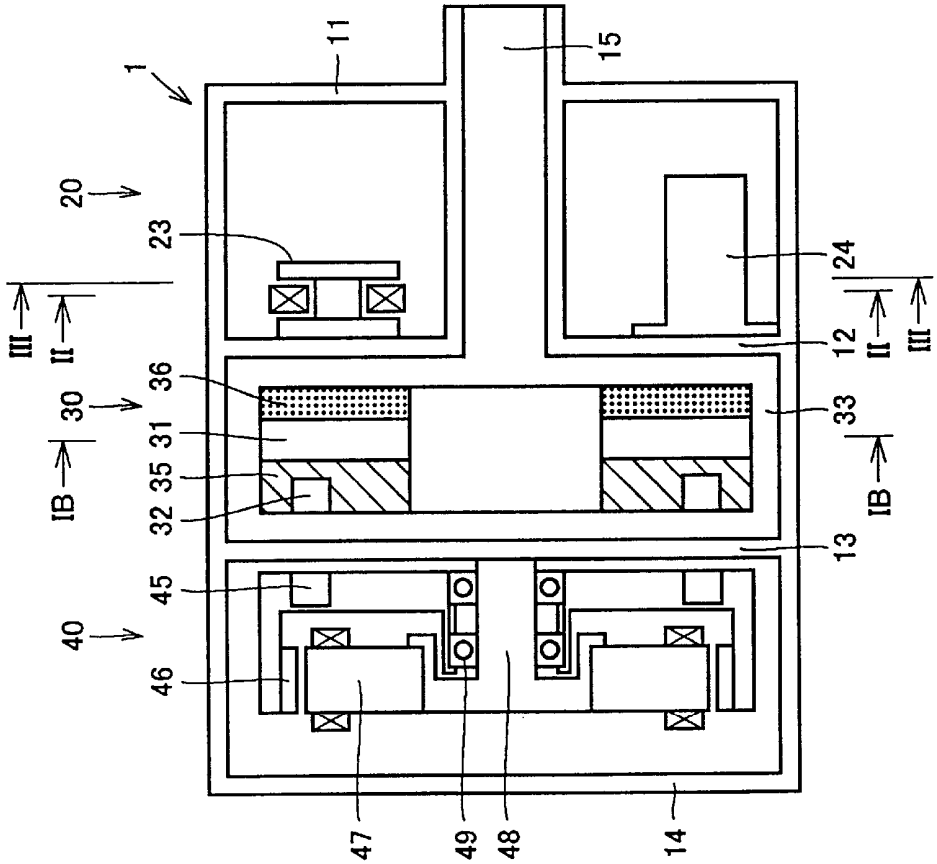
1
11
15
20
23
24
III
II
12
36
30
31
35
32
33
IB
13
45
40
46
47
49
48
14

FIG.1A

FIG.2

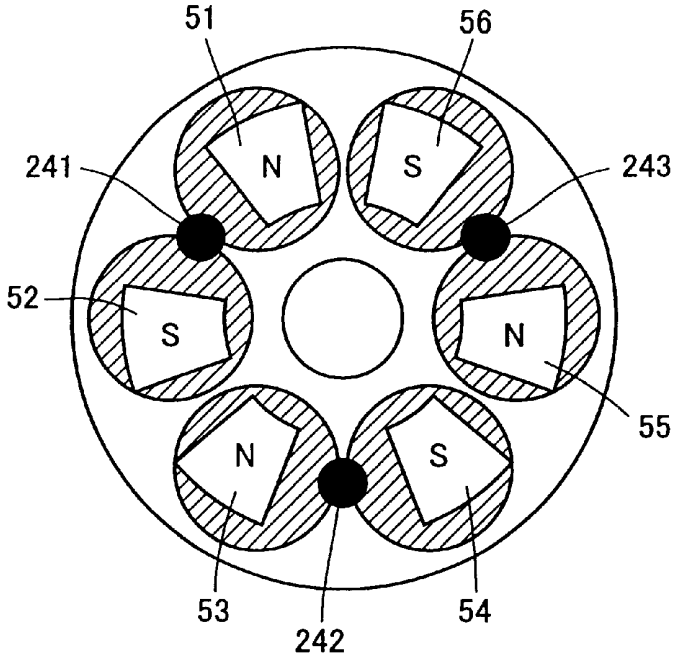
51
56
241
243
52
55
53
242
54
N
S
S
N
N
S

FIG.3

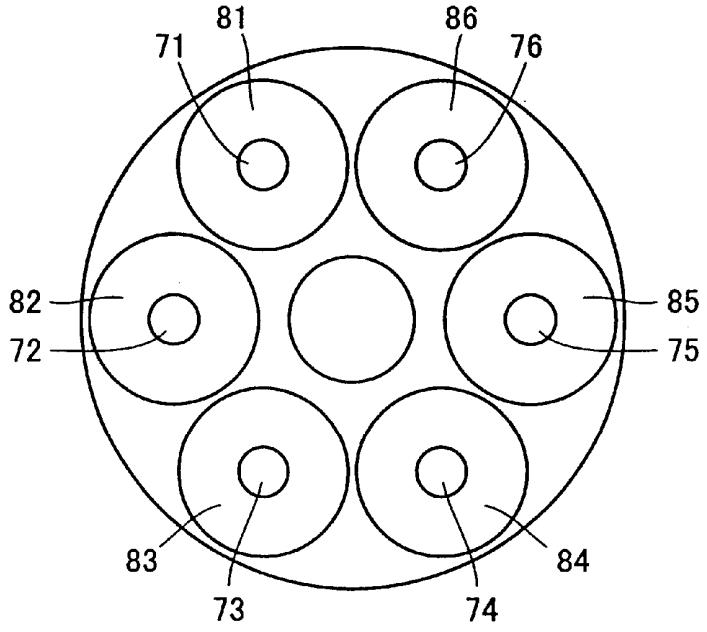
81
86
71
76
82
85
72
75
83
84
73
74

FIG.4

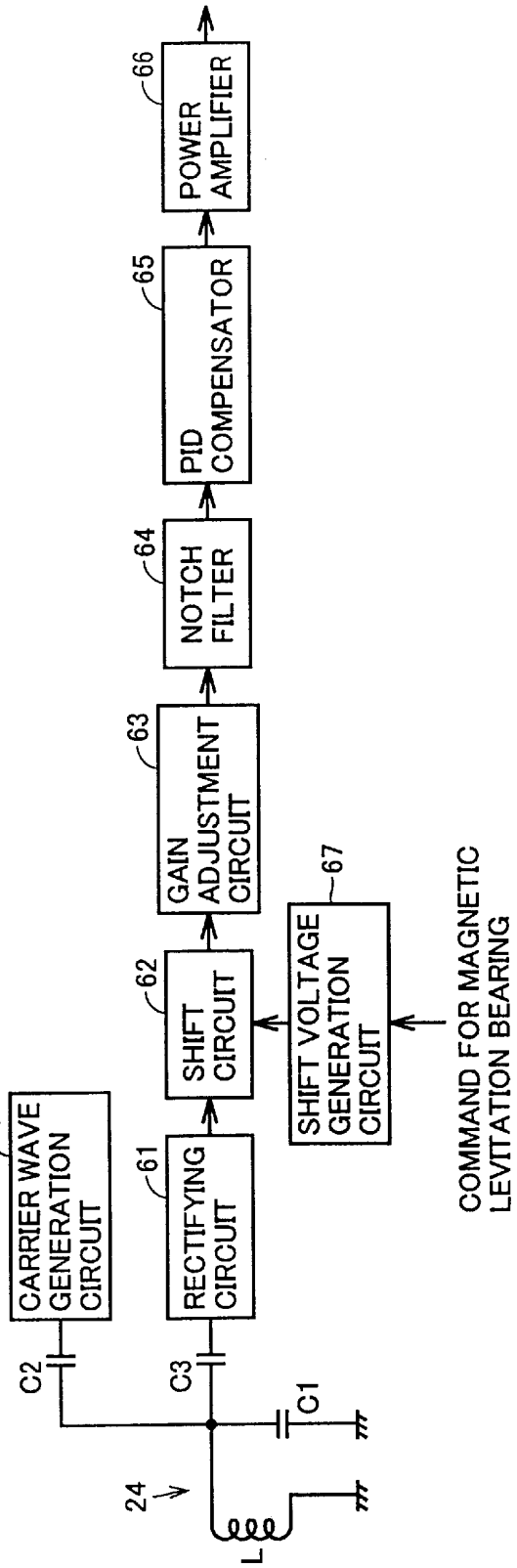
60
CARRIER WAVE GENERATION CIRCUIT
C2
24
L
C1
C3
61
RECTIFYING CIRCUIT
62
SHIFT CIRCUIT
63
GAIN ADJUSTMENT CIRCUIT
64
NOTCH FILTER
65
PID COMPENSATOR
66
POWER AMPLIFIER
67
SHIFT VOLTAGE GENERATION CIRCUIT
COMMAND FOR MAGNETIC LEVITATION BEARING

FIG.5

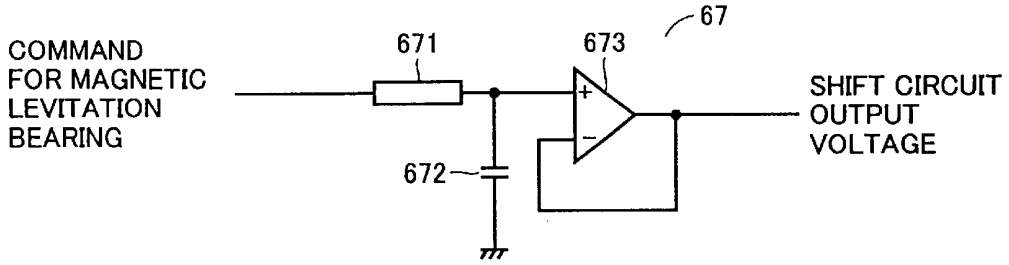
COMMAND
FOR MAGNETIC
LEVITATION
BEARING
671
673
67
672
SHIFT CIRCUIT
OUTPUT
VOLTAGE

FIG.6

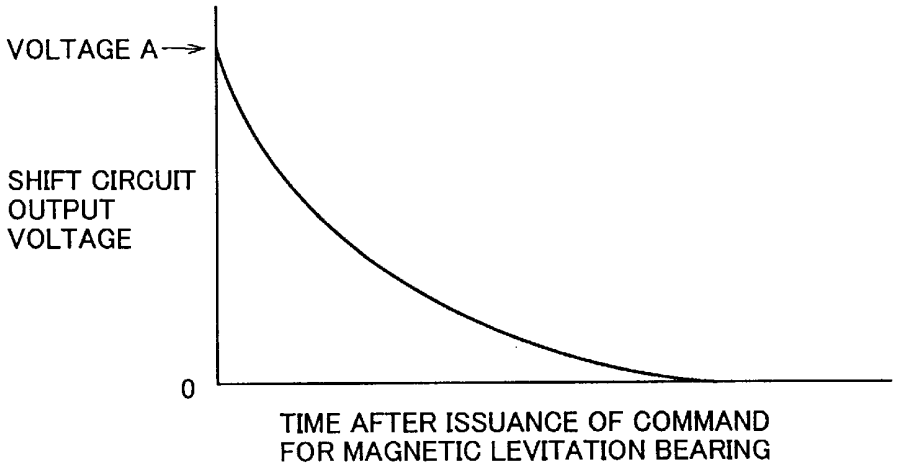
VOLTAGE A
SHIFT CIRCUIT
OUTPUT
VOLTAGE
0
TIME AFTER ISSUANCE OF COMMAND
FOR MAGNETIC LEVITATION BEARING

FIG.7

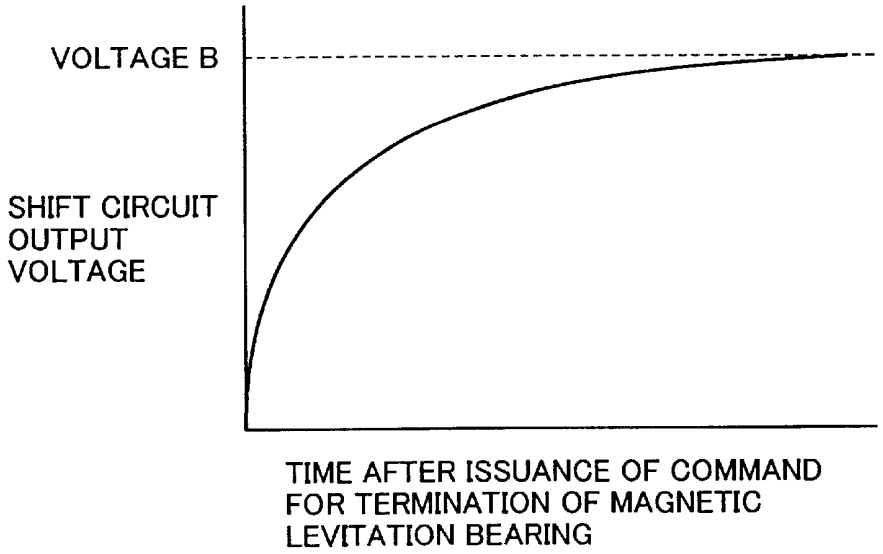
VOLTAGE B
SHIFT CIRCUIT OUTPUT VOLTAGE
TIME AFTER ISSUANCE OF COMMAND FOR TERMINATION OF MAGNETIC LEVITATION BEARING

FIG.8

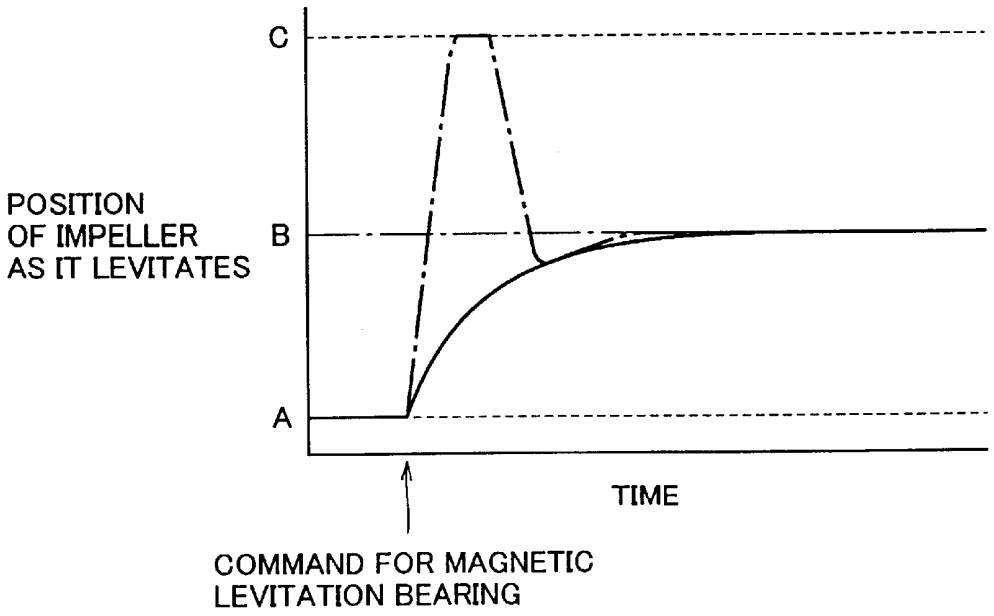
C
B
A
POSITION OF IMPELLER AS IT LEVITATES
TIME
COMMAND FOR MAGNETIC LEVITATION BEARING

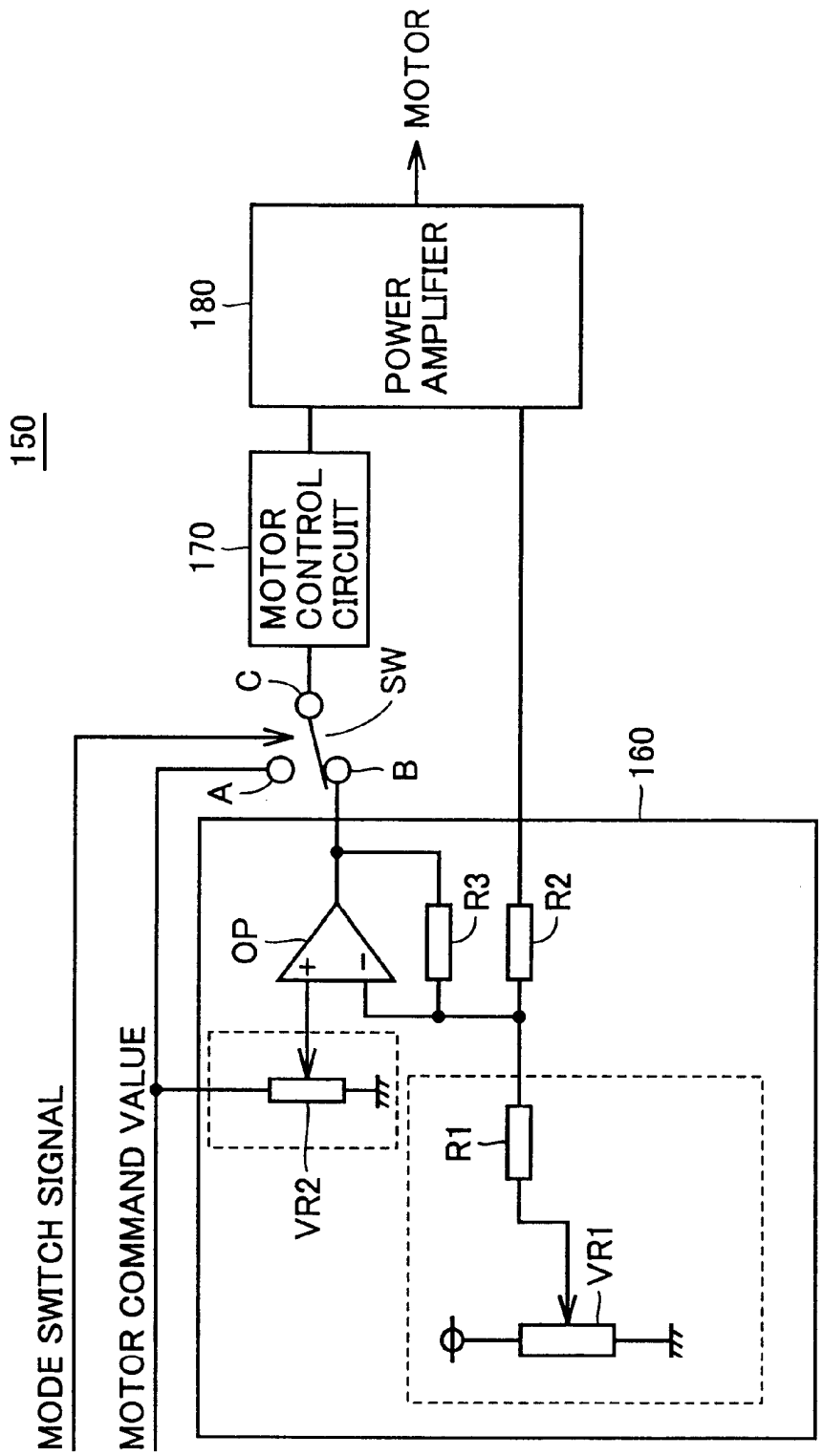
150
MODE SWITCH SIGNAL
MOTOR COMMAND VALUE
A
C
SW
B
170
MOTOR CONTROL CIRCUIT
180
POWER AMPLIFIER
MOTOR
160
OP
+
-
R3
R2
VR2
R1
VR1

FIG.9

FIG.10

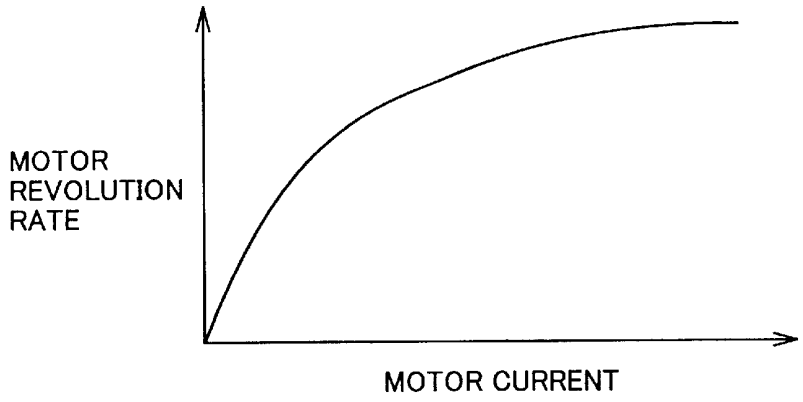
MOTOR
REVOLUTION
RATE
MOTOR CURRENT

FIG.11

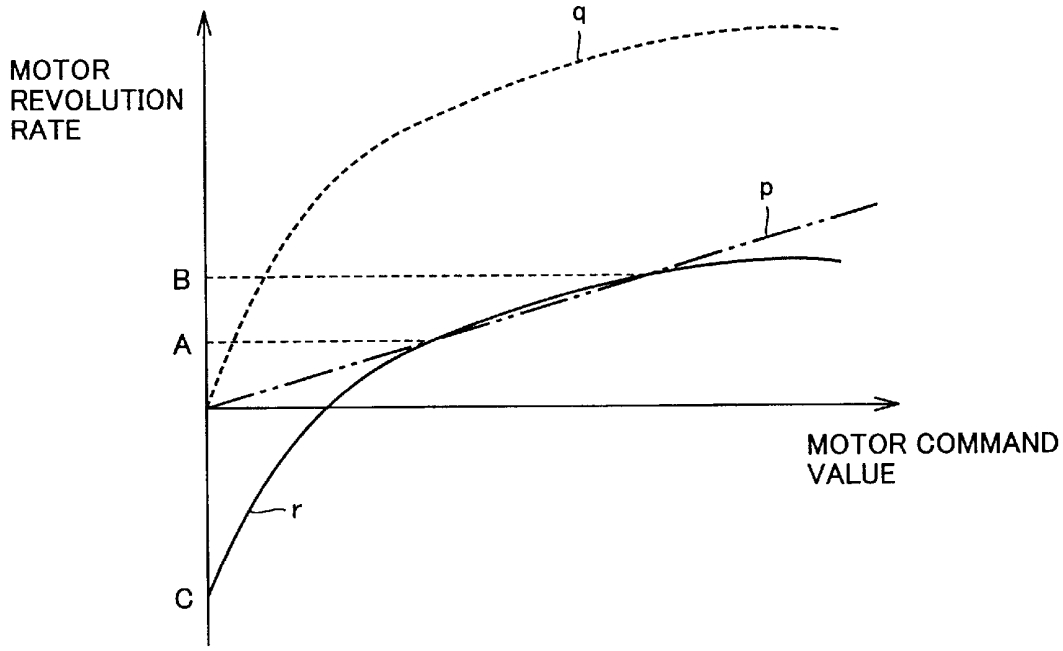
q
MOTOR
REVOLUTION
RATE
p
B
A
MOTOR COMMAND
VALUE
r
C

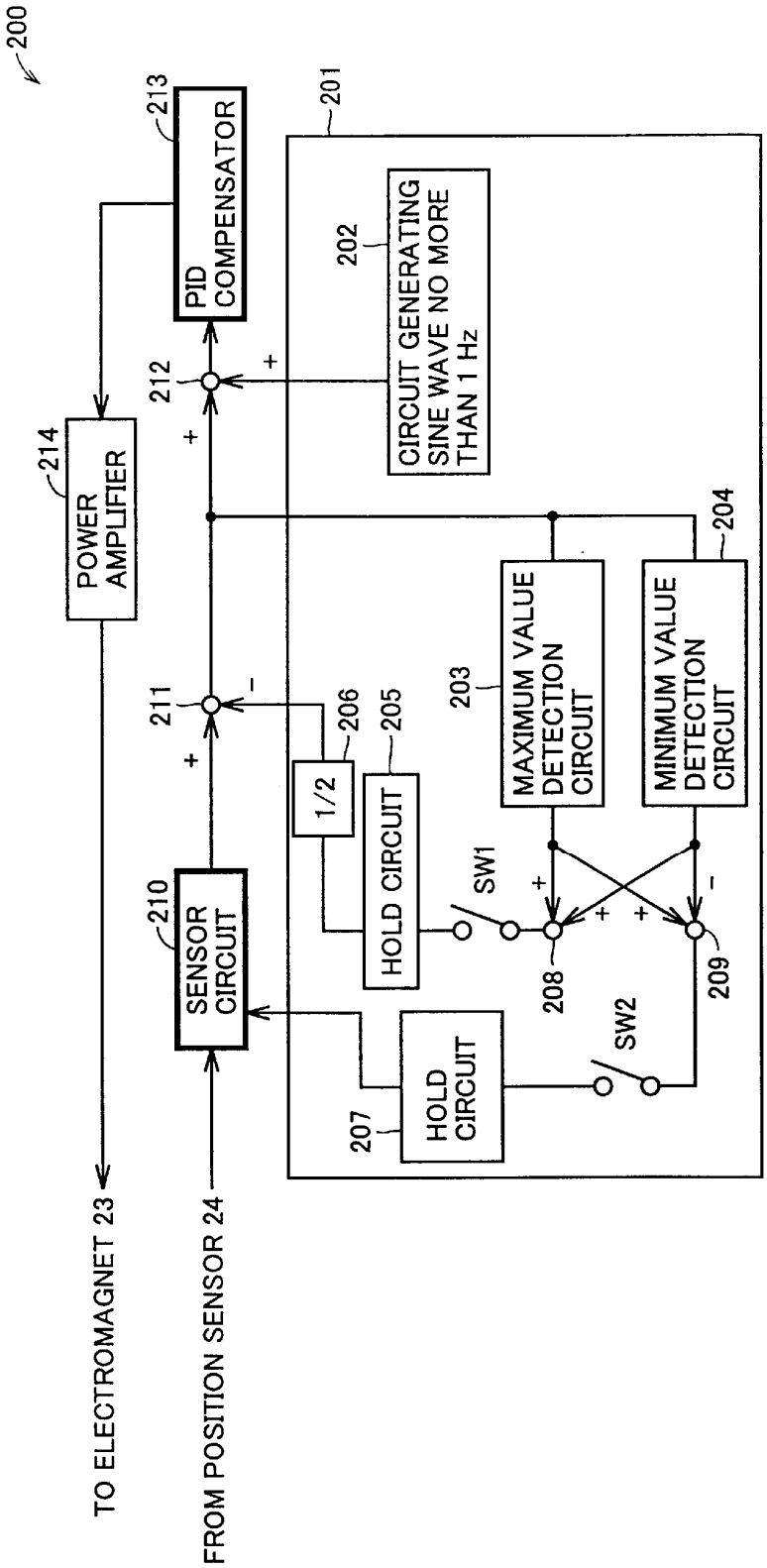
200
201
202
CIRCUIT GENERATING SINE WAVE NO MORE THAN 1 Hz
203
MAXIMUM VALUE DETECTION CIRCUIT
204
MINIMUM VALUE DETECTION CIRCUIT
205
HOLD CIRCUIT
206
1/2
207
HOLD CIRCUIT
208
209
210
SENSOR CIRCUIT
211
212
213
PID COMPENSATOR
214
POWER AMPLIFIER
SW1
SW2
TO ELECTROMAGNET 23
FROM POSITION SENSOR 24

FIG.12

FIG.13

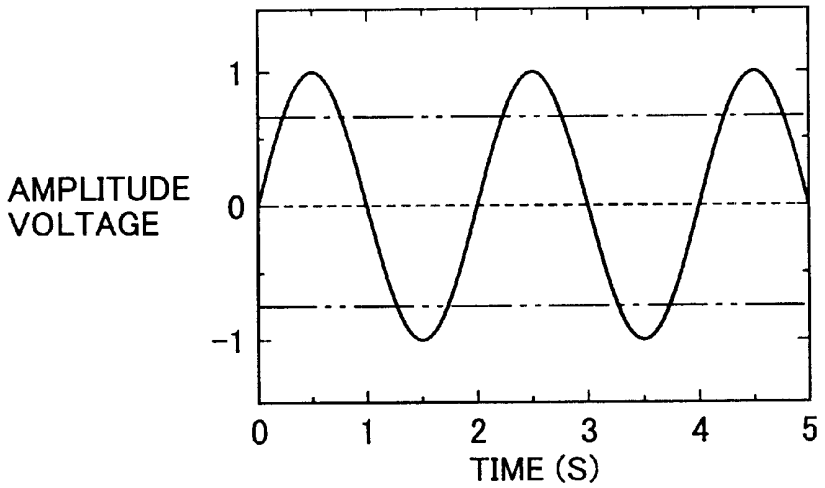
AMPLITUDE
VOLTAGE
1
0
−1
0
1
2
3
4
5
TIME (S)

FIG.14

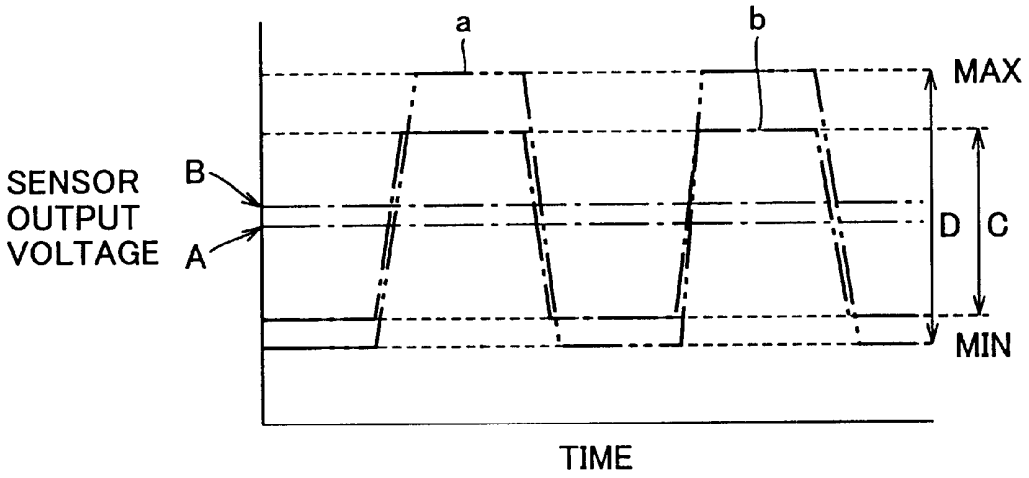
a
b
MAX
SENSOR
OUTPUT
VOLTAGE
B
A
D
C
MIN
TIME

FIG.15

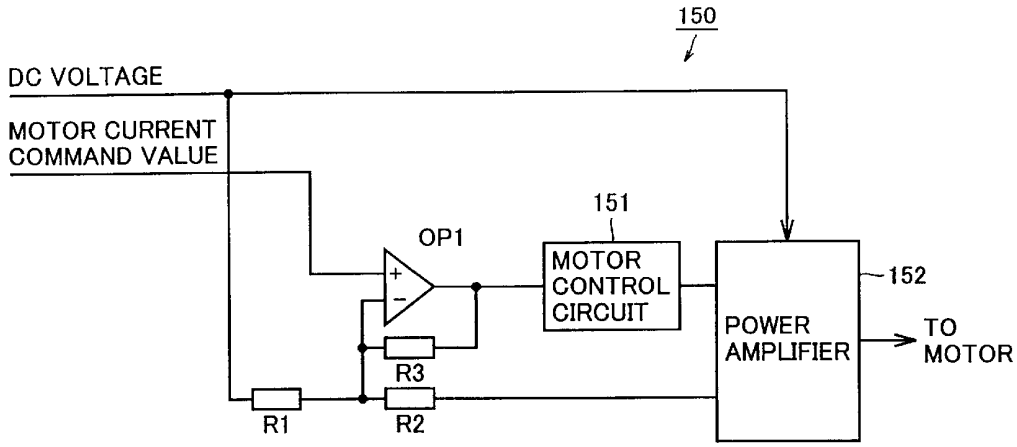

FIG.16

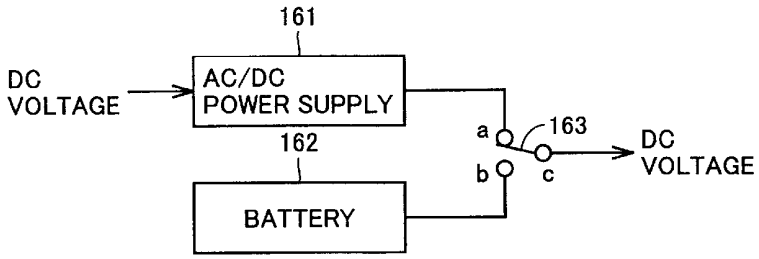

FIG.17

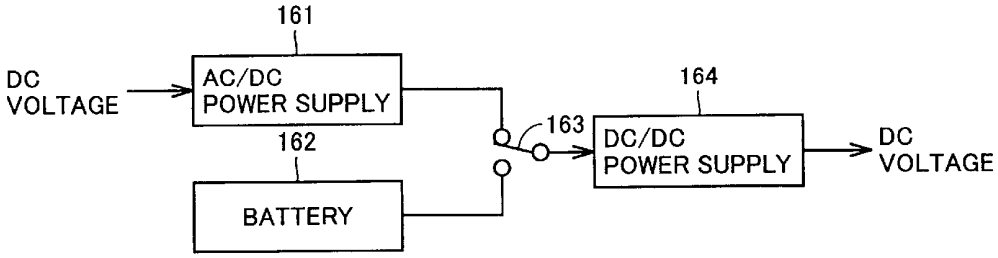

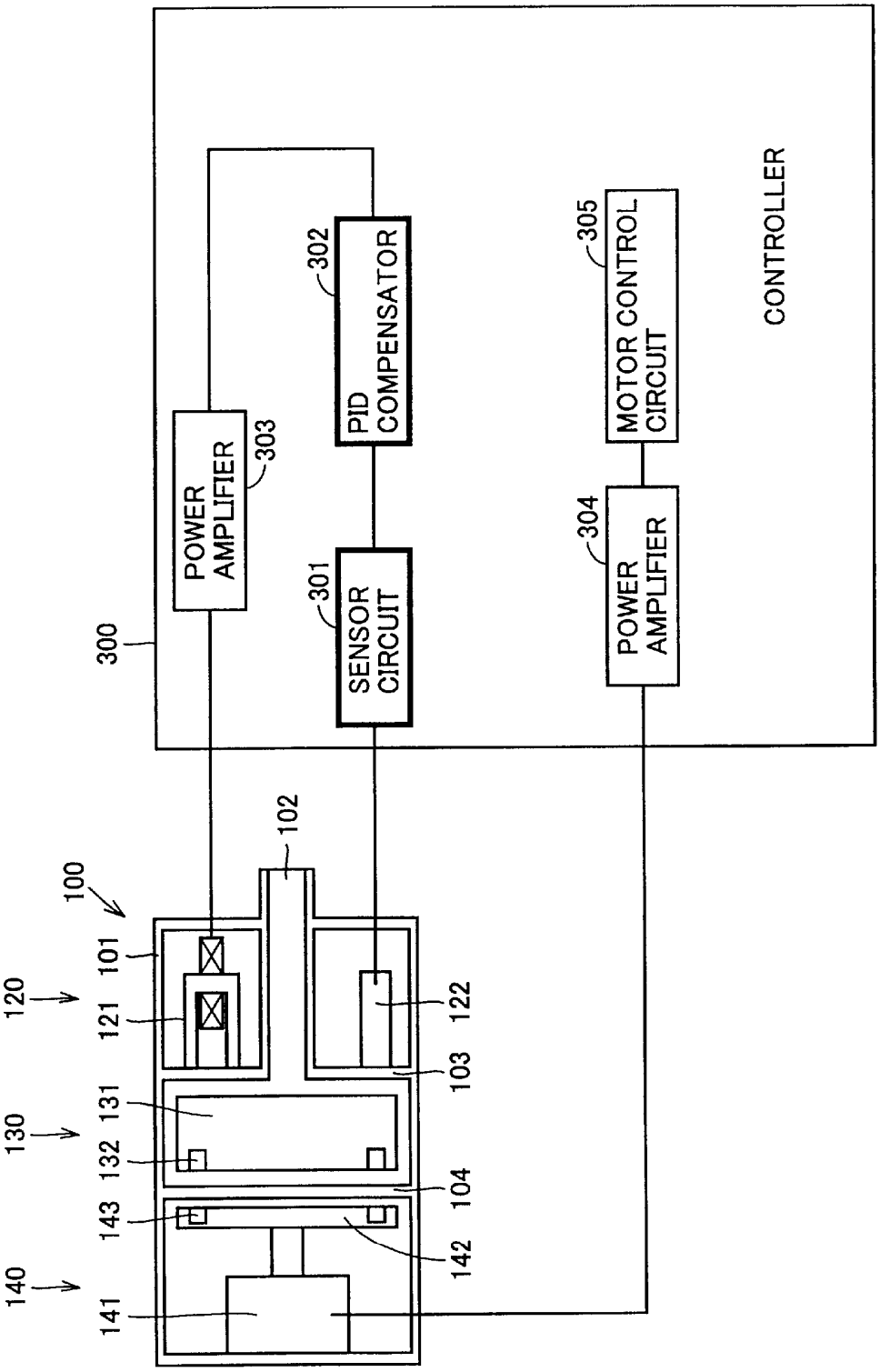

FIG.18 PRIOR ART

FIG.19 PRIOR ART

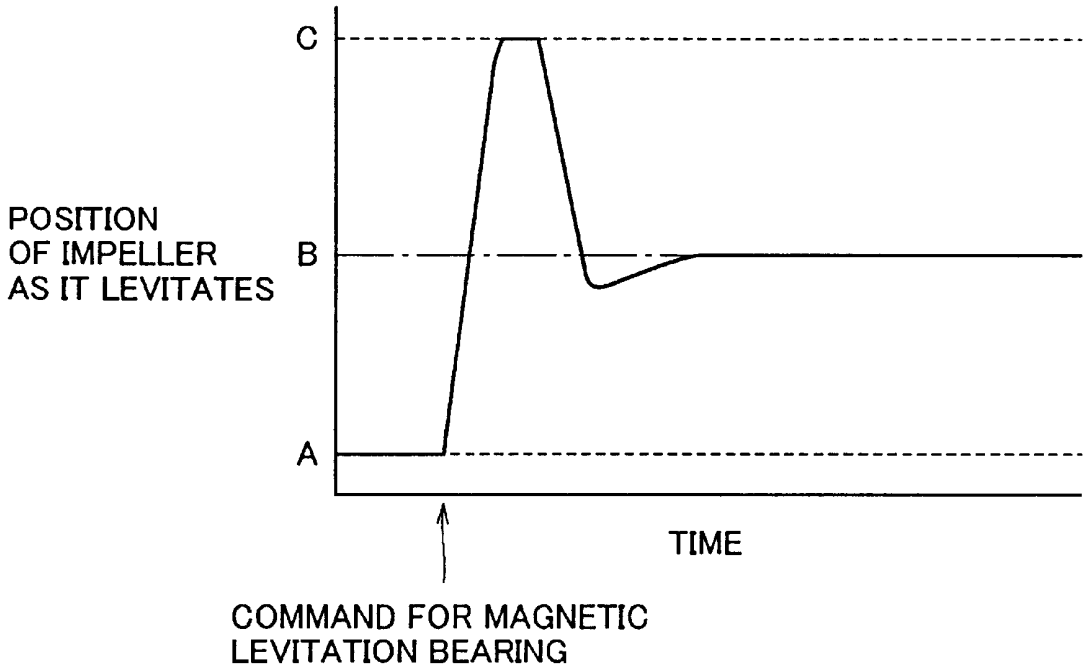

MAGNETICALLY LEVITATED PUMP APPARATUS

BACKGROUND OF THE INVENTION

1. Field of the Invention

The present invention relates to fluid pump apparatus and more specifically to those magnetically levitating an impeller to discharge fluid such as blood.

2. Description of the Background Art

FIG. **18** is a vertical cross section of a magnetically levitated (maglev) pump apparatus and a block diagram of a controller thereof. In FIG. **18** a maglev pump apparatus **100** is configured with an electromagnet unit **120**, a pump unit **130** and a motor unit **140** housed in a cylindrical housing **101**. Electromagnet unit **120** has an electromagnet **121** and a position sensor **122** incorporated therein. Housing **101** has on one side a side wall having a center provided with an inlet **102** introducing a fluid. At least three electromagnets **121** and at least three position sensors **122** surround inlet **102**.

In pump unit **130** an impeller **131** is rotatably housed and it has a portion closer to electromagnet unit **120**, or closer to one side, that is supported by electromagnet **121** contactless through a partition **103**, and position sensor **122** senses the distance as measured from one side of impeller **131**. Impeller **131** has the other side with a permanent magnet **132** buried therein. Motor unit **140** houses a motor **141** and a rotor **142**. Rotor **142** has a surface facing pump unit **130** and having a permanent magnet **143** buried therein opposite to permanent magnet **132** of impeller **131** with a partition **104** posed therebetween.

In the maglev pump apparatus thus configured, position sensor **122** provides an output which is in turn input to a sensor circuit **301** included in a controller **300** and sensor circuit **301** detects the distance between one side of impeller **131** and position sensor **122**. Sensor circuit **301** provides an output which is in turn input to a PID compensator **302** to provide PID compensation and PID compensator **302** provides an output which is in turn amplified by a power amplifier **303** and thus applied to electromagnet **121** to control attractive force exerted toward the opposite side of impeller **131**.

Furthermore impeller **131** has a portion closer to motor unit **140** that is affected by the attractive force exerted by permanent magnets **132** and **143** and impeller **131** is magnetically levitated by a non-controlled bearing provided by permanent magnets **132** and **143** and a controlled bearing provided by electromagnet **121** and it is rotated by the driving force of a motor **141** to allow blood or any other similar fluid introduced through inlet **102** to be output through an outlet (not shown) formed at pump unit **130**.

In the FIG. **18** maglev pump **100** when a command is issued to provide levitation via the magnetic bearing, i.e., when attractive force occurs at electromagnet **121**, as shown FIG. **19**, impeller **13** moves from a position A, corresponding to an internal wall surface closer to motor **140** affected by a significant attractive force created by permanent magnets **132** and **143** configuring magnetic-coupling, to a normal levitation position B. However, because of over-shoot of an excessive response as impeller **131** levitates, impeller **131** exceeds normal position B and impinges against a position C corresponding to an internal wall surface closer to electromagnet unit **120**, as represented in FIG. **19**. Thereafter impeller **131** moves to normal levitation position B. If impeller **131**, a target of position sensor **122**, impinges on a wall surface and have its surface damaged, the sensing function may be impaired.

Furthermore if the apparatus is used as a blood pomp impeller **131** is housed in pump unit **130** having its inner wall surface coated with heparin to prevent formation of thrombosis and if impeller **131** impinges against the inner wall of the pump chamber the coating would be disadvantageously peeled off.

SUMMARY OF THE INVENTION

Therefore a main object of the present invention is to provide a maglev pump capable of preventing an impeller from impinging against an inner wall of a pump chamber when a command is issued to provide magnetic levitation.

The present invention provides a maglev pump including: a pump unit outputting a fluid through revolution of a rotative member in a casing; a drive unit magnetically coupled with the rotative member without contacting the rotative member, to rotate the rotative member; a position detection unit detecting a position of the rotative member as the rotative member levitates; and a controlled magnetic bearing unit operative in response to an output of the position detection unit to support the rotative member without contacting the rotative member, and it is characterized in that it is provided with a control means controlling a command signal of the controlled magnetic bearing unit to allow the rotative member to have a position closer to the drive unit when the rotative member starts magnetic levitation.

Thus in the present invention the rotative member can be prevented from impinging against an internal wall of the housing when a command is issued to provide magnetic levitation. Thus the internal wall of the housing can be protected from damage.

Preferably in magnetic levitation the control means shifts the signal output of the position detection unit gradually to a normal value.

More preferably the control means gradually shifts the signal output from the position detection unit in a direction opposite to a normal value to terminate magnetic levitation.

More preferably the maglev pump configures a blood pump.

More preferably the drive unit is switchable between a mode controlling a revolution rate to be constant and a mode controlling a current to be constant and the control circuit controls a revolution rate to be substantially constant when one of the modes is switched to the other of the modes.

Furthermore the control circuit controls a revolution rate within a tolerance of approximately ±20% when one of the modes is switched the other of the modes.

Furthermore the pump includes an adjustment circuit adjusting the position of the rotative member as the rotative member levitates after the maglev pump has been assembled.

The adjustment circuit periodically moves the rotative member in the casing axially.

Furthermore the adjustment circuit includes: a periodical signal generation circuit generating a periodical signal of a low frequency and applying the periodical signal to a circuit portion of the controlled magnetic bearing unit; and a correction circuit outputting a correction signal to the control circuit to rotate the rotative member in the casing at an axially center position, in response to the output from the position detection unit when the rotative member periodi-

cally moves according to the periodical signal output from the periodical signal generation circuit.

The periodical signal generation circuit generates a periodical signal of no more than 1 Hz to periodically move the rotative member.

The present invention in another aspect provides a maglev pump including: a pump unit having in a casing a rotative member rotated to output a fluid; a support supporting the rotative member; a drive unit rotating the rotative member; and a control circuit controlling and thus preventing the rotative member from having a revolution rate varying when a supplied power supply voltage varies while the rotative member is rotating in a mode controlling a current to be constant.

Preferably the control circuit adjusts a value of a command indicative of the mode according to the supplied power supply voltage and a feedback signal proportional to a value of a current fed to the drive unit.

More preferably the power supply voltage is supplied by switching between a direct current voltage converted from an alternating current voltage and a direct current voltage supplied from a battery.

The power supply voltage is a selected and further converted one of the direct current voltage converted from the alternating current and the direct current voltage supplied from the battery.

Still more preferably, the support is coupled with the rotative member magnetically without contacting the rotative member, and the maglev pump further includes: a position detection unit detecting a position of the rotative member as the rotative member levitates; and a controlled magnetic bearing operative in response to an output of the position detection unit to support the rotative member without contacting the rotative member.

The foregoing and other objects, features, aspects and advantages of the present invention will become more apparent from the following detailed description of the present invention when taken in conjunction with the accompanying drawings.

BRIEF DESCRIPTION OF THE DRAWINGS

In the drawings:

FIGS. **1**A and **1**B show a body of a blood pump as one embodiment of the present invention;

FIG. **2** is a cross section taken along line II—II of FIG. **1**A;

FIG. **3** is a cross section taken along line III—III of FIG. **1**A;

FIG. **4** is a schematic block diagram showing one embodiment of a controller controlling the body of the blood pump shown in FIGS. **1**A and **1**B;

FIG. **5** shows a shift voltage generation circuit shown in FIG. **4**;

FIG. **6** represents a shift circuit output voltage varying with time after a command is issued to provide magnetic levitation;

FIG. **7** represents a shift circuit output voltage varying with time after a command is issued to terminate magnetic levitation;

FIG. **8** represents the position of the impeller varying with time as the impeller levitates after a command is issued to provide magnetic levitation;

FIG. **9** is a block diagram showing a controller controlling a maglev pump apparatus provided as another embodiment of the present invention;

FIG. **10** represents a relationship between motor revolution rate and motor current when the FIG. **9** pump is used as a blood pump;

FIG. **11** represents a relationship between motor command value and motor revolution rate;

FIG. **12** is a block diagram showing an exemplary controller controlling a maglev pump apparatus provided as still another embodiment of the present invention;

FIG. **13** is a waveform diagram of a sine wave output from the sine wave generation circuit shown in FIG. **12**;

FIG. **14** represents a relationship between sensor output and time;

FIG. **15** is a block diagram showing an exemplary controller controlling a blood pump apparatus provided as still another embodiment of the present invention;

FIG. **16** shows an exemplary power supply circuit supplying the FIG. **15** power amplifier with a power supply voltage;

FIG. **17** shows another exemplary power supply circuit supplying the FIG. **15** power amplifier with a power supply voltage;

FIG. **18** shows a conventional maglev pump apparatus and controller; and

FIG. **19** represents the position of an impeller varying with time as it levitates after a command is issued to provide magnetic levitation.

DESCRIPTION OF THE PREFERRED EMBODIMENTS

FIGS. **1**A and **1**B show a body of a blood pump as one example of a maglev pump apparatus of one embodiment of the present invention. More specifically, FIG. **1**A is a vertical cross section thereof and FIG. **1**B is a cross section thereof taken along line IB—IB of FIG. **1**A. FIG. **2** is a cross section taken along line II—II of FIG. **1**A and FIG. **3** is a cross section taken along line III—III of FIG. **1**A.

With reference to FIGS. **1**A and **1**B, the blood pump body includes a cylindrical casing **1** axially partitioned by partitions **11**, **12**, **13** and **14** to have sections housing a magnetic bearing unit **20**, a pump unit **30** and a motor unit **40**, respectively. Casing **1** is formed for example of plastic, ceramic, metal or the like, although of casing **1**, partition **12** provided between electromagnet unit **20** and pump unit **30** and partition **13** provided between pump unit **30** and motor unit **40** are not allowed to be formed of magnetic material and they are accordingly formed of non-magnetic material.

At pump unit **30** casing **1** is internally provided with a pump chamber **33** in which an impeller **31** rotates to output through an outlet **16** shown in FIG. **1**B a fluid introduced through an inlet **15**. Impeller **31** has a plurality of vanes **34** spirally provided, as shown in FIG. **1**B. Impeller **31** includes a non-magnetic member **35** having a permanent magnet **32** configuring a non-controlled magnetic bearing and a soft magnetic member **36** corresponding to a rotor of a controlled magnetic bearing. Permanent magnet **32** is divided in a circumferential direction of impeller **31** and adjacent magnets are magnetized to have opposite magnetic poles.

Note that by coating the entire interior of pump chamber **33** with heparin serving as an anticoagulant, formation of thrombus can be prevented therein and the fluid pump apparatus can thus be used as a blood delivering pump. In this example, the heparin coating can effectively limit activation of coagulation system, protect platelets, limit activation, activation of inflammation system, activation of fibrinolysis system, and the like.

In FIG. **1**A, the dotted portion of impeller **31** is formed of soft magnetic material and the remainder thereof is shown formed of nonmagnetic material. If the pump is used to deliver a corrosive fluid such as blood, the soft magnetic material is preferably a highly corrosive-resistant, ferritic stainless steel (SUS447J1, SUS444 or the like) and the nonmagnetic material is preferably a highly corrosive-resistant, austenitic stainless steel (SUS316L or the like) or titanium alloy, pure titanium or the like.

Opposite to a side of impeller **31** having permanent magnet **32**, a cylindrical member **48** is provided in motor unit **40**, extending from a center of partition **13** toward partition **14**. Cylindrical member **48** has an external peripheral surface provided with a motor bearing **49** provided in the form of a ball or roller bearing which axially supports a motor rotor **46** rotatably. Cylindrical member **48** has an end with a motor stator **47** attached thereto. Motor rotor **46** is driven by motor stator **47** to rotate. Motor rotator **46** is provided with the same number of permanent magnets **45** as permanent magnets **32** of impeller **31** opposite thereto to provide attractive force. Adjacent permanent magnets **45** are magnetized to have opposite magnetic poles.

Note that while the motor is a synchronous motor including a DC brushless motor, a non-synchronous motor including an induction motor, or the like, it may be any kind of motor.

Provided in electromagnet unit **20** are an electromagnet **23** and a position sensor **24**, attached on a wall of partition **12** provided between electromagnet unit **20** and pump unit **30**, opposite to that side of impeller **31** having soft magnetic member **36**. Electromagnet **23** and position sensor **24** allow impeller **31** to be held at the center of pump chamber **33**, matching the attractive force produced between permanent magnets **32** and **45**.

Thus the heat generated at electromagnet **23** can be transferred to partition **12** and thus cooled by a fluid (blood) existing in pump unit **30**. Similarly, the heat generated at motor stator **47** can also be transferred through cylindrical member **48** to partition **13** and thus cooled by the fluid existing in motor unit **30**. This can reduce heat transfer to outside casing **1** and also reduce heat transfer to position sensor **24** to provide a reliable sensing operation. Furthermore, if partitions **12** and **13** are increased in thickness to have a level of strength allowing electromagnet **23**, position sensor **24** and motor stator **47** to be attached thereto, housing **1** can advantageously have an outer-diameter portion reduced in thickness.

Electromagnet **23** and position sensor **24** are arranged, as shown in FIGS. **2** and **3**. More specifically, paired electromagnets **23** have magnetic poles **51** and **52** with a sensor **241** arranged therebetween, magnetic poles **53** and **54** with a sensor **242** arranged therebetween, and magnetic poles **55** and **56** with a sensor **243** arranged therebetween. Sensors **241** to **243** are typically a magnetic sensor, such as a reluctance sensor.

Furthermore, as shown in FIG. **3**, electromagnets **23** have their respective yokes **71–76** in the form of a column with electromagnet coils **81–86** wound therearound, respectively.

Circumferentially arranging magnetic poles **51–56** can increase the space housing electromagnet coils **81–86** that can be housed in magnetic bearing unit **40**. This ensures a large space for winding the coils without increasing the size of the pump. Increasing a space for housing a coil in turn allows an electromagnet coil to have an increased turn count and an increased wire diameter and can thus save power for the electromagnet.

Furthermore, electromagnet yokes **71–76** in the form of a column can facilitate winding electromagnet coils **81–86** around electromagnet yokes **71–76**, respectively. Electromagnet yokes **71–76** having a simple geometry also ensure insulation from electromagnet coils **81–86**. While electromagnet yokes **71–76** are cylindrical, they may be in the form of a prism, which can facilitate winding coils and thus ensuring a withstand voltage between the coils and the yokes.

Furthermore while in FIGS. **2** and **3** electromagnet yokes **71–76** and electromagnet coils **81–86** are all arranged in a single circle, they may not thus be arranged, if required, to effectively ensure a space for housing the same.

With the magnetic bearing having each electromagnet with its magnetic pole and yoke arranged circumferentially, the magnetic bearing unit is not required to have a large space and the electromagnet yoke can be provided in a cylinder or a prism, which can facilitate winding coils and thus ensuring a withstand voltage between the coils and the yokes.

FIG. **4** is a block diagram showing an example of a controller controlling a blood pump of the embodiment shown in FIGS. **1**A and **1**B.

In FIG. **4**, the FIGS. **1**A and **1**B position sensor **24** has an inductance L and receives a carrier wave signal for example of 100 kHz from a carrier wave generation circuit **60** via a capacitor C**2**. Position sensor **24** outputs via a capacitor C**3** to a rectifying circuit **61** a detection signal with the carrier wave having an amplitude varying as the distance from the FIGS. **1**A and **1**B impeller **31** varies. Rectifying circuit **61** rectifies the detection signal to provide a dc signal which is in turn output to a shift circuit **62**.

In magnetic levitation, shift circuit **62** compulsively sets an output of position sensor **24** to allow impeller **31** to have a position closer to motor **40** as the impeller levitates. More specifically, shift circuit **62** raises the sensor output according to a shift voltage applied from a shift voltage generation circuit **67** to gradually, magnetically levitate impeller **31**. Shift voltage generation circuit **67** responds to a command to provide magnetic bearing levitation by outputting and supplying a shift voltage to shift circuit **62**. A gain adjustment circuit **63** adjusts a gain. The sensor signal with the gain adjusted is fed to a notch filter **64** and the carrier wave thus has a center frequency component removed.

FIG. **5** shows an example of the FIG. **4** shift voltage generation circuit. In the figure, a signal corresponding a command to levitate the impeller via the magnetic bearing, is input via a resistance **671** to an operational amplifier **673** at a non-inverting input. Between the non-inverting input and ground is connected a capacitor **672**. Operational amplifier **673** also has an inverting input and an output terminal connected to the inverting input and outputting a shift voltage.

FIG. **6** represents the shift circuit output voltage varying with time after a command is issued to terminate the impeller's levitation via the magnetic bearing. FIG. **7** represents the shift circuit output voltage varying with time after a command is issued to stop levitating the impeller via the magnetic bearing. FIG. **8** represents the position of the impeller varying with time as the impeller levitates.

In FIG. **5**, when the command signal to provide magnetic levitation goes high the magnetic levitation is terminated and when the command signal is driven low the magnetic levitation is provided. When the command signal is driven low, electric charge stored in capacitor **672** is discharged and the operational amplifier **673** output, corresponding to the

shift circuit output voltage, gradually reduces, as shown in FIG. **6**. The shift circuit output voltage is composited with a voltage output from a rectifying circuit **61**. Thus shift circuit **62** outputs a gradually increasing voltage to gain adjustment circuit **63**. Consequently, impeller **31** can be free from conventional overshoot when it levitates, and, as represented in FIG. **8** by the solid line, as time elapses the impeller gradually levitates from position A corresponding to an inner wall surface of motor unit **40** and arrives at normal position B. This can prevent magnetically levitated impeller **31** from impinging against and damaging an inner wall of pump chamber **33**.

When the signal indicating the command to provide magnetic levitation goes high to terminate magnetic levitation, capacitor **672** is charged via resistance **671** and operational amplifier **673** thus outputs a voltage gradually increasing as shown in FIG. **7**. Consequently, shift circuit **62** outputs a gradually decreasing voltage to gain adjustment circuit **63**. Consequently impeller **31** moves gradually from normal position B shown in FIG. **8** to position A corresponding to an internal wall surface closer to motor unit **40** and stops there.

Thus in the present embodiment when the rotative member is to be magnetically levitated a command is issued to allow the rotative member to have a position closer to the drive unit as it levitates. Thus the rotative member can be free of overshooting and thus prevented from moving from a position closer to the drive unit toward the controlled magnetic bearing and impinging against and thus damaging an internal wall of the housing.

The FIG. **18** maglev fluid pump **100** is used as a blood pump for an artificial heart, and controller **300** can switch motor **140** between a constant revolution rate (CRR) mode and a constant motor current (CMC) mode. In the CRR mode if a motor is revolving for example at a rate of 2000 rpm and a load imposed varies the motor still can rotate at the same, constant revolution rate. The CMC mode allows a motor to pass a constant current for example of **1**A. In the CMC mode, a blood pump has a revolution rate increasing to supply a constant amount of blood when a blood vessel contracts, and the blood pump has a revolution rate decreasing when the blood vessel expands as a load imposed thereon is reduced. However, if in use a mode is switched to another and for example an erroneous operation results in a motor revolution rate varying significantly the pump's load system may be disadvantageously overloaded.

A description will now be provided of an embodiment capable of preventing a revolution rate from significantly varying when a mode is switched to another.

FIG. **9** is a block diagram showing a controller controlling a maglev pump apparatus of such an embodiment. A blood pump with the present invention applied thereto normally revolves in a range of 1500 rpm to 2500 rpm and seldom rotates at a rate higher or lower than this range. Accordingly, in the present embodiment, a relationship between current and revolution rate is calculated with a predetermined revolution rate range adopted, to control the pump to revolve at a constant rate if one mode is switched to another. Such control is implemented by a controller **150** as shown in FIG. **9**.

In FIG. **9**, controller **150** includes a mode conversion adjustment circuit **160**, a motor control circuit **170**, a power amplifier **180** and a mode switch SW. Motor control circuit **170** provides control to maintain a constant value of a motor revolution rate corresponding to the value of a signal input thereto and it is provided in the form of a motor revolution rate control circuit. Power amplifier **180** is provided to supply power to the motor in response to an output of motor control circuit **170**.

A mode switch signal is provided to switch between the CRR mode and the CMC mode and it switches mode switch SW. More specifically, as shown in FIG. **9**, mode switch SW has contact points A and C connected together in the CRR mode and contact points B and C connected together in the CMC mode.

Via mode switch SW motor control circuit **170** receives a signal, which corresponds to a motor revolution rate command value. More specifically, if in response to a mode switch signal mode switch SW has connection points A and C connected together then a motor command value serves as a motor revolution rate command value and the motor is controlled to have a revolution rate in proportion to the command value (the CRR mode).

The motor command value allows the FIG. **1**A motor **40** to rotate in the CRR mode and it is also applied to mode conversion adjustment circuit **160**. Mode conversion adjustment circuit **160** converts the motor command value to a constant motor current (CMC) value, i.e., a value allowing motor **40** to have a revolution rate free of significant variation when a mode switches to another.

Mode conversion adjustment circuit **160** is an operation circuit added receiving and allowing a motor command value to control a motor current to have a constant value and it is configured to prevent motor **40** from having a significantly varying revolution rate when a mode switches to another. More specifically, mode conversion adjustment circuit **160** includes variable resistances VR**1** and VR**2**, an operational amplifier OP, and resistances R**1**–R**3**. A motor command value is divided by variable resistance VR**2** to have a gain adjusted. Operational amplifier OP has a non-inverting input receiving the motor command value divided by variable resistance VR**2**, and an inverting input receiving a voltage in proportion to a motor current via resistance R**2** and also receiving via resistance R**1** a voltage set by variable resistance VR**1**. More specifically, mode conversion adjustment circuit **160** feeds an amount of motor current back to operational amplifier OP to function to provide an operation to obtain a signal to be input to motor control circuit **170** so as to obtain a motor current corresponding to a motor command value. Resistance R**3** is provided to adjust a gain for the entirety of operational amplifier OP.

If in response to a mode switch signal mode switch SW has connection points B and C connected together then an output of mode conversion adjustment circuit **160** controls the motor and the CMC mode is thus set.

FIG. **10** represents a relationship between motor revolution rate and motor current when the FIG. **1**A pump is used as a blood pump. As shown in the figure, when a current starts to flow a motor revolution rate also increases accordingly, although the motor revolution rate and the motor current are not in proportion to each other. However, the blood pump has a range of revolution rate normally used and therein a motor revolution rate and a motor current can approximate linearly.

FIG. **11** represents a relationship between a motor command value and a motor revolution rate. In the figure, a chained line represents the relationship in the CRR mode, a broken line q represents the relationship when neither VR**2** functioning to adjust a gain in mode conversion adjustment circuit **160** nor VR**1** providing operational amplifier OP's offset adjustment are adjusted, and a solid line r represents the relationship matching that in the CRR mode within a normal motor revolution rate range of A to B as VR**1** an VR**2** are adjusted.

Thus there can be shown that at a normal revolution rate the motor's revolution can have a variation range limited for a single given motor command value in both of the CRR mode and the CMC mode. In FIG. **11**, for solid line r, an intercept c on axis y can be adjusted with variable resistance VR**1** (in mode conversion adjustment circuit **160**) and the gradient between motor revolution rate A–B can be adjusted with variable resistance VR**2** (in mode conversion adjustment circuit **160**).

In the FIG. **11** solid line r adjustment preferably the blood pump's standard condition for use is previously assumed and a relationship between the impeller **31** revolution rate and motor current is previously obtained in a pump load system using a blood vessel having a length and diameter to be actually used, to allow a motor command value to control a revolution rate to be substantially uniform in the two modes. Practically, it is tolerable if the uniform revolution rate is achieved within a range of approximately ±20%.

Thus when mode switch SW switches a mode to the CMC mode a motor command value is converted to a linear line p shown in FIG. **11** and the converted output is fed from operational amplifier OP to motor control circuit **170** which in turn provides an output which is received by power amplifier **180** to drive motor stator **47**.

Thus in the present embodiment if the CRR mode and the CMC mode are switched the both modes can maintain substantially the same revolution rate to prevent the pump load system of interest from bearing a disadvantageous overload.

Thus in the present embodiment when the both modes of constant revolution rate control and constant current control are switched a revolution rate can be controlled to have a substantially constant value to prevent the pump load system of interest from bearing a disadvantageous overload when the modes are switched.

If maglev pump apparatus **100** is used as an artificial heart, casing **101** has each portion welded and thus assembled to seal pump unit **130** airtight. As such, after it is assembled the casing cannot be disassembled and accordingly impeller **131** and position sensor **122** cannot have a distance therebetween that is adjustable. A description will now be provided of an embodiment of a maglev pump apparatus capable of adjusting the position of the rotative member as it rotates so that the sensor output can be optimized after the casing is assembled.

FIG. **12** is a block diagram showing a controller controlling a maglev pump apparatus of such an embodiment.

In FIG. **12** a controller **200** includes a sensor adjustment circuit **201**, a sensor circuit **210**, addition circuits **211** and **212**, a PID compensator **213**, and a power amplifier **214**. Sensor adjustment circuit **201** includes a sine wave generation circuit **202** generating a sine wave signal serving as a periodical signal of no more than 1 Hz, such as 0.5 Hz, and inputting the signal to addition circuit **212** provided at a stage preceding PID compensator **213**. Addition circuit **212** receives the sensor output and adds thereto a sine wave of 0.5 Hz and outputs it to PID compensator **213**.

The sensor output is also fed to a maximum value detection circuit **203** and a minimum value detection circuit **204**. Maximum value detection circuit **203** detects a maximum value of the sensor output and minimum value detection circuit **204** detects a minimum value of the sensor output. The output of maximum value detection circuit **203** and that of minimum value detection circuit **204** are input to addition circuits **208** and **209**. Addition circuit **208** adds the maximum and minimum values together and addition circuit **209** extracts the minimum value from the maximal value. Thus addition circuit **208** outputs an average value of the maximum and minimum values in amplitude of the sensor output and addition circuit **209** outputs a difference between the maximum and minimum values, i.e., an amplitude.

The addition circuit **208** output is fed via a switch element SW**1** to a hold circuit **205** which provides an output received by a ½ circuit **206** and thus halved and thus fed to addition circuit **211**. The amplitude output from addition circuit **209** is fed via a switch element SW**2** to a hold circuit **207** which provides an output received by sensor circuit **210** as a signal to correct a gain of a sensor output.

Sensor circuit **210** receives a sensor output from position sensor **24** and it receives the output of hold sensor **207** to adjust a gain of the sensor. The sensor circuit **210** output is input to addition circuit **211** and the addition circuit **211** output is input to addition circuit **212**.

FIG. **13** is a waveform diagram of a sine wave output from the FIG. **12** sine wave generation circuit **202** and FIG. **14** represents a relationship between sensor output and time.

With reference to FIGS. **12–14** an operation of the present embodiment will be described. Sine wave generation circuit **202**, as shown in FIG. **13**, generates a sine wave signal of no more than 1 Hz, such as 0.5 Hz. This sine wave signal is added to a sensor output by addition circuit **212**, which in turn outputs the addition to PID compensator **213** for PID-compensation and then amplified by power amplifier **214** which outputs a drive signal to drive the FIG. **1** electromagnet **23**. The signal driving electromagnet **23** has an amplitude varying in synchronization with a waveform shown in FIG. **13**, owing to the 0.5 Hz sine wave signal.

As such electromagnet **23** exerts attractive force toward impeller **31** that is intensified and weakened in a cycle of 0.5 Hz and impeller **31**, as shown in FIG. **1A**, moves between partition **12** closer to electromagnet unit **20** and partition **13** closer to motor **40** in pump chamber **33** in the axial direction slowly, repeatedly. Depending on the level of the sine wave signal, impeller **31** can abut against an internal wall of pump chamber **33** However, impeller **31** moves depending on the 0.5 Hz sine wave and thus does not impinge against an internal wall of pump chamber **33** to damage the heparin coating the wall surface.

As impeller **31** is moved by the 0.5 Hz sine wave signal axially, the position sensor **24** output also varies significantly, and maximum and minimum value detection circuits **203** and **204** detect maximum and minimum values, respectively, of the voltage of the sensor output. The detected maximum and minimum values are added together by addition circuit **208** and addition circuit **209** also subtracts the minimum value from the maximum value. The maximum and minimum values have a relationship as shown in FIG. **14**. More specifically, sensor circuit **210** outputs a voltage in a waveform a having an amplitude D between MAX and MIN shown in FIG. **14**. FIG. **14** also represents a waveform b corresponding to set data having an amplitude C and a neutral voltage as indicated by A in FIG. **6**. In FIG. **14**, MAX represents impeller **31** closest to magnetic bearing unit **20** and MIN represents impeller **31** closest to motor unit **40**.

The addition circuit **208** output is fed via switch element SW**1** to hold circuit **205** and held therein. Hold circuit **205** provides an output received by ½ circuit **206** and thus halved and then fed to addition circuit **211**. The addition circuit **211** input corresponds to the FIG. **14** voltage B. The addition circuit **209** output is fed via switch element SW**2** to hold circuit **207** and held therein. The hold voltage is applied

to sensor circuit **210** to correct a gain of sensor circuit **210**. More specifically, the ½ circuit **206** output allows impeller **31** to levitate in pump chamber **33** at a neutral position, as set in addition circuit **211**, while the hold circuit **207** output corrects a gain of a sensor output. Consequently, impeller **31** can have the neutral position that corresponds to the FIG. **14** voltage A and furthermore the sensor output's voltage can have a gain set to have a value as desired.

Note that the above setting is provided as follows: with electromagnet **23** and motor unit **40** driven to magnetically levitate impeller **31**, sine wave generation circuit **202** is operated to generate a sine wave and then when for example a temporal period of 10 seconds has elapsed the generation of the sine wave is stopped and switch elements SW**1** and SW**2** are turned on.

Consequently, if impeller **31** is sealed in pump chamber **33** its neutral position can be set to obtain an appropriate sensor output.

While in the above description sine wave generation circuit **202** generates a sine wave of 0.5 Hz, any frequency no more than 1 Hz is applicable to the present invention.

FIG. **15** is a block diagram showing an example of a controller controlling a blood pump apparatus in a still another embodiment of the present invention, and FIGS. **16** and **17** show a power supply circuit supplying the FIG. **15** power amplifier with a power supply voltage.

A blood pump with the present invention applied thereto normally revolves in a range of 1500 rpm to 2500 rpm and seldom revolves at a rate higher or lower than this range. Accordingly, in the present embodiment, a relationship between a power supply voltage and a motor current command value is calculated in a predetermined revolution rate range to control the motor current command value to allow the pump to revolve at a constant rate if power supply voltage varies. Such control is implemented by a controller **150** as shown in FIG. **15**.

In FIG. **15**, controller **150** includes a motor control circuit **151**, a power amplifier **152**, an operational amplifier OP**1**, and resistances R**1**, R**2**, R**3**. Power amplifier **152** drives the FIG. **1**A motor unit **40** and in response to a control signal from motor control circuit **151** supplies motor stator **47** with a predetermined direct current.

Power amplifier **152** receives a dc voltage from the FIG. **16** or **17** power supply circuit. In the FIG. **16** example, a commercial ac voltage is converted by an AC/DC power supply **161** to a dc voltage, more preferably a stable dc voltage, which is fed to a switch **163** at a contact point a, while a battery **162** feeds a dc voltage to switch **163** at a contact point b. Switch **163** is switched to allow a contact point c to output a dc voltage which is in turn fed to power amplifier **152**.

In the FIG. **17** example, the dc voltage from AC/DC power supply **161** and that from battery **162** are switched by switch **163** and furthermore boosted or down-converted by a DC/DC power supply **164** such as an inverter power supply before it is fed to power amplifier **152**. If DC/DC power supply **164** is employed and when the battery **162** charge voltage varies, a dc voltage output may also vary.

Power amplifier OP**1** has a non-inverting input receiving a motor current command value and an inverting input receiving a dc voltage via resistance R**1**. The operational amplifier OP**1** inverting input also receives a feedback signal from power amplifier **152** via resistance R**2** and a signal output from operational amplifier OP**1** via resistance R**3**. The operational amplifier OP**1** output signal is applied to motor control circuit **151**.

The present embodiment specifically operates, as described below. For the sake of convenience, the FIG. **16** AC/DC power supply **161** feeds a dc 12V voltage to power amplifier **152**, a motor current command value of **1**A is set and the motor has a revolution rate of 1500 rpm.

When switch **163** is switched to the dc voltage of battery **162** and if battery **162** is fully charged and dc voltage is for example 15V then power amplifier **152** operates to increase the motor's revolution rate. However, the dc voltage is received via resistance R**1** by operational amplifier OP**1** at the inverting input, and as the dc voltage increases from 12V to 15V operational amplifier OP**1** has the inverting input increased in potential and thus operates to decrease its output signal, or a motor current command value, in level. In response to the motor current command value motor control circuit **151** controls the motor's revolution, resulting in the motor having a reduced revolution rate.

In contrast, when dc voltage is lower than a rated voltage and if a motor current command value is a constant value then the motor's revolution rate reduces. However, the operational amplifier OP**1** inverting input also has a voltage reduced and operational amplifier OP**1** operates to increase its output signal in level. Consequently, operational amplifier OP**1** outputs a signal larger in level than the motor current command value and in response to the motor current command value motor control circuit **151** increases the motor's revolution rate.

Thus in the present embodiment if dc voltage is higher or lower than a rated voltage a motor current command value can be decreased or increased to prevent dc voltage variation from resulting in a motor revolution rate having a significant variation.

Note that while in the above embodiment the present invention is applied to a maglev blood pump apparatus by way of example it is applicable to any blood pump apparatus controlled in response to a motor current command value to have a constant motor revolution rate.

Thus, in the present embodiment, in a mode controlling a current to be constant, allowing a drive unit to receive a constant current to rotate a rotative member, if a power supply voltage varies a revolution rate can be controlled to be free of variation for example to prevent a pump load system from disadvantageously bearing an overload.

Although the present invention has been described and illustrated in detail, it is clearly understood that the same is by way of illustration and example only and is not to be taken by way of limitation, the spirit and scope of the present invention being limited only by the terms of the appended claims.

What is claimed is:

1. A maglev pump, comprising:

a pump unit outputting a fluid through revolution of a rotative member in a casing;

a drive unit magnetically coupled with said rotative member without contacting said rotative member, to rotate said rotative member;

a position detection unit detecting a position of said rotative member as said rotative member levitates;

a controlled magnetic bearing unit operative in response to an output of said position detection unit to support said rotative member without contacting said rotative member; and

a control circuit controlling a command signal of said controlled magnetic bearing unit to allow said rotative member to have a position closer to said drive unit when said rotative member starts magnetic levitation.

2. The maglev pump of claim 1, wherein in magnetic levitation said control means shifts the output of said position detection unit gradually to a normal value.

3. The maglev pump of claim 1, wherein to terminate magnetic levitation said control means changes the output of said position detection unit gradually from said normal value to shift the position of said rotative member toward said pump unit as said rotative member levitates.

4. The maglev pump of claim 3, wherein said maglev pump configures a blood pump.

5. The maglev pump of claim 1, wherein:

said drive unit is switchable between a mode controlling a revolution rate to be constant and a mode controlling a current to be constant; and

said control circuit controls a revolution rate to be substantially constant when one of said modes is switched to the other of said modes.

6. The maglev pump of claim 5, wherein said control circuit controls a revolution rate within a tolerance of approximately ±20% when one of said modes is switched the other of said modes.

7. The maglev pump of claim 5, wherein said maglev pump configures a blood pump.

8. The maglev pump of claim 1, further comprising an adjustment circuit adjusting the position of said rotative member as said rotative member levitates after said maglev pump has been assembled.

9. The maglev pump of claim 8, wherein said adjustment circuit periodically moves said rotative member in said casing axially.

10. The maglev pump of claim 9, wherein said adjustment circuit includes:

a periodical signal generation circuit generating a periodical signal of a low frequency and applying said periodical signal to a circuit portion of said controlled magnetic bearing unit; and

a correction circuit outputting a correction signal to said control circuit to rotate said rotative member in said casing at an axially center position, in response to the output from said position detection unit when said rotative member periodically moves according to said periodical signal output from said periodical signal generation circuit.

11. The maglev pump of claim 10, wherein said periodical signal generation circuit generates a periodical signal of no more than 1 Hz to periodically move said rotative member.

12. The maglev pump of claim 11, wherein said maglev pump configures a blood pump.

13. A maglev pump comprising:

a pump unit having in a casing a rotative member rotated to output a fluid;

a support supporting said rotative member;

a drive unit rotating said rotative member; and

a control circuit controlling and thus preventing said rotative member from having a revolution rate varying when a supplied power supply voltage varies while said rotative member is rotating in a mode controlling a current to be constant.

14. The maglev pump of claim 13, wherein said control circuit adjusts a value of a command indicative of said mode according to said supplied power supply voltage and a feedback signal proportional to a value of a current fed to said drive unit.

15. The maglev pump of claim 14, wherein said power supply voltage is supplied by switching between a direct current voltage converted from an alternating current voltage and a direct current voltage supplied from a battery.

16. The maglev pump of claim 15, wherein a selected one of the direct current voltage converted from the alternating current and the direct current voltage supplied from the battery, is further converted to provide said power supply voltage.

17. The maglev pump of claim 13, said support being coupled with said rotative member magnetically without contacting said rotative member, further comprising:

a position detection unit detecting a position of said rotative member as said rotative member levitates; and

a controlled magnetic bearing operative in response to an output of said position detection unit to support said rotative member without contacting said rotative member.

* * * * *