US010500321B2

(12) **United States Patent**
Bourque

(10) **Patent No.: US 10,500,321 B2**
(45) **Date of Patent: *Dec. 10, 2019**

(54) **IMPLANTABLE BLOOD PUMP**

(71) Applicant: **TC1 LLC**, St. Paul, MN (US)

(72) Inventor: **Kevin Bourque**, Reading, MA (US)

(73) Assignee: **TC1 LLC**, St. Paul, MN (US)

(*) Notice: Subject to any disclaimer, the term of this patent is extended or adjusted under 35 U.S.C. 154(b) by 2 days.

This patent is subject to a terminal disclaimer.

(21) Appl. No.: **15/594,373**

(22) Filed: **May 12, 2017**

(65) **Prior Publication Data**

US 2017/0246365 A1 Aug. 31, 2017

Related U.S. Application Data

(60) Division of application No. 14/735,990, filed on Jun. 10, 2015, now Pat. No. 9,675,741, which is a (Continued)

(51) **Int. Cl.**
A61M 1/12 (2006.01)
A61M 1/10 (2006.01)
(Continued)

(52) **U.S. Cl.**
CPC ***A61M 1/1036*** (2014.02); ***A61M 1/101*** (2013.01); ***A61M 1/1015*** (2014.02);
(Continued)

(58) **Field of Classification Search**
CPC A61M 1/122
See application file for complete search history.

(56) **References Cited**

U.S. PATENT DOCUMENTS

845,816 A 3/1907 Prindle
888,654 A 5/1908 Prindle
(Continued)

FOREIGN PATENT DOCUMENTS

CN 300837668 10/2008
EP 150320 5/1990
(Continued)

OTHER PUBLICATIONS

Antaki et al., Pedia Flow TM Maglev Ventricular Assist Device: A Prescriptive Design Approach, Cardiovascular Engineering and Technology, vol. 1, No. 1, Mar. 2010, pp. 104-121.
(Continued)

Primary Examiner — Eric D. Bertram
(74) *Attorney, Agent, or Firm* — Kilpatrick Townsend and Stockton LLP

(57) **ABSTRACT**

A method for assisting blood circulation in a patient includes drawing a flow of blood from a patient's heart into a blood flow channel formed by a housing. The flow of blood is passed through a motor stator to a rotor disposed within the blood flow channel. The motor stator is arranged circumferentially around the blood flow channel. The rotor has permanent magnetic poles for magnetic levitation and rotation of the rotor. The motor stator is controlled to act as a radial bearing for magnetic levitation of the rotor and to rotate the rotor within the blood flow channel. The rotor is levitated within the blood flow channel in the direction of the rotor axis of rotation via passive magnetic interaction between the rotor and the motor stator. The flow of blood is output from the blood flow channel to the patient.

16 Claims, 6 Drawing Sheets

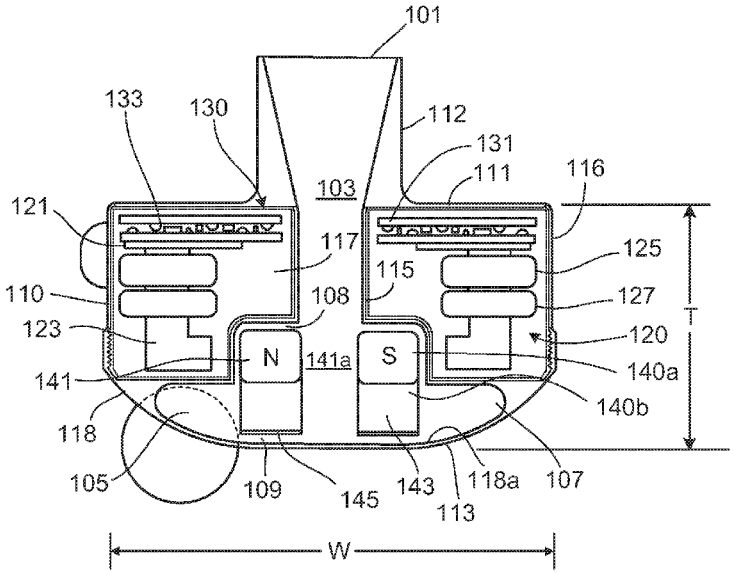

Related U.S. Application Data

continuation of application No. 13/212,813, filed on Aug. 18, 2011, now Pat. No. 9,091,271.

(60) Provisional application No. 61/375,504, filed on Aug. 20, 2010.

(51) **Int. Cl.**
F04D 13/06 (2006.01)
F04D 29/048 (2006.01)

(52) **U.S. Cl.**
CPC ***A61M 1/1029*** (2014.02); ***A61M 1/1031*** (2014.02); ***A61M 1/1086*** (2013.01); ***A61M 1/122*** (2014.02); ***A61M 1/127*** (2013.01); ***F04D 13/064*** (2013.01); ***F04D 13/0606*** (2013.01); ***F04D 13/0633*** (2013.01); ***F04D 13/0646*** (2013.01); ***F04D 29/048*** (2013.01); *A61M 1/1008* (2014.02); *A61M 1/1012* (2014.02); *A61M 2205/3365* (2013.01); *Y10T 29/49009* (2015.01)

(56) **References Cited**

U.S. PATENT DOCUMENTS

1,026,101 A 5/1912 Marsh
2,128,988 A 9/1938 Russell
2,747,512 A 5/1956 Paul
2,864,552 A 12/1958 Norman
3,005,117 A 10/1961 Buchhold
3,066,849 A 12/1962 Beams
3,122,101 A 2/1964 Baker et al.
3,225,608 A 12/1965 Ivan
3,401,640 A 9/1968 John et al.
3,499,274 A 3/1970 Fergason
3,575,536 A 4/1971 Jacobs et al.
3,597,022 A 8/1971 Waldron
3,608,088 A 9/1971 Dorman et al.
3,611,815 A 10/1971 Fischell
3,647,324 A 3/1972 Rafferty et al.
3,650,581 A 3/1972 Boden et al.
3,938,913 A 2/1976 Isenberg et al.
3,957,389 A 5/1976 Rafferty et al.
4,082,376 A 4/1978 Wehde et al.
4,135,253 A 1/1979 Reich et al.
4,213,207 A 7/1980 Wilson
4,340,260 A 7/1982 Forster et al.
4,382,199 A 5/1983 Isaacson
4,398,773 A 8/1983 Boden et al.
4,405,286 A 9/1983 Studer
4,408,966 A 10/1983 Maruyama
4,475,866 A 10/1984 Kambe et al.
4,507,048 A 3/1985 Belenger et al.
4,589,822 A 5/1986 Clausen et al.
4,642,036 A 2/1987 Young
4,688,998 A 8/1987 Olsen et al.
4,704,121 A 11/1987 Moise
4,763,032 A 8/1988 Bramm et al.
4,779,614 A 10/1988 Moise
4,844,707 A 7/1989 Kletschka
4,876,492 A 10/1989 Lester et al.
4,878,831 A 11/1989 Ewing
4,929,158 A 5/1990 Girault
4,944,748 A 7/1990 Bramm et al.
4,957,504 A 9/1990 Chardack
5,055,005 A 10/1991 Kletschka
5,078,741 A 1/1992 Bramm et al.
5,106,273 A 4/1992 Lemarquand et al.
5,112,200 A 5/1992 Isaacson et al.
5,112,202 A 5/1992 Oshima et al.
5,126,612 A 6/1992 Girault
5,127,792 A 7/1992 Katsuta et al.
5,159,219 A 10/1992 Chu et al.
5,177,387 A 1/1993 Mcmichael et al.
5,195,877 A 3/1993 Kletschka
5,220,232 A 6/1993 Rigney, II et al.
5,341,059 A 8/1994 Fukuyama et al.
5,360,317 A 11/1994 Clausen et al.
5,385,581 A 1/1995 Bramm et al.
5,470,208 A 11/1995 Kletschka
5,678,306 A 10/1997 Bozeman, Jr. et al.
5,708,346 A 1/1998 Schob
5,725,357 A 3/1998 Nakazeki et al.
5,798,454 A 8/1998 Nakazeki et al.
5,808,437 A 9/1998 Schob
5,917,297 A 6/1999 Gerster et al.
5,928,131 A 7/1999 Prem
5,947,703 A 9/1999 Nojiri et al.
6,053,705 A 4/2000 Schob et al.
6,100,618 A 8/2000 Schoeb et al.
6,130,494 A 10/2000 Schob
6,146,325 A 11/2000 Lewis et al.
6,222,290 B1 4/2001 Schob et al.
6,227,797 B1 5/2001 Watterson et al.
6,234,772 B1 5/2001 Wampler et al.
6,244,835 B1 * 6/2001 Antaki F04D 3/005 415/900
6,249,067 B1 6/2001 Schob et al.
6,264,635 B1 7/2001 Wampler et al.
6,278,251 B1 8/2001 Schöb
6,293,901 B1 9/2001 Prem
6,302,661 B1 10/2001 Khanwilkar et al.
6,351,048 B1 2/2002 Schob et al.
6,355,998 B1 3/2002 Schob et al.
6,394,769 B1 5/2002 Bearnson et al.
6,447,266 B2 9/2002 Antaki et al.
6,468,041 B2 10/2002 Ozaki
6,559,567 B2 5/2003 Schob
6,575,717 B2 6/2003 Ozaki et al.
6,589,030 B2 7/2003 Ozaki
6,605,032 B2 8/2003 Benkowski et al.
6,623,475 B1 9/2003 Siess
6,626,644 B2 9/2003 Ozaki
6,634,224 B1 10/2003 Schob et al.
6,640,617 B2 11/2003 Schob et al.
6,641,378 B2 11/2003 Davis et al.
6,688,861 B2 2/2004 Wampler
6,707,200 B2 3/2004 Carroll et al.
6,711,943 B1 3/2004 Schob
6,817,836 B2 11/2004 Nose et al.
6,949,066 B2 9/2005 Bearnson et al.
7,070,398 B2 7/2006 Olsen et al.
7,112,903 B1 9/2006 Schob
7,138,776 B1 11/2006 Gauthier et al.
7,150,711 B2 12/2006 Nüsser et al.
D534,548 S 1/2007 Urano et al.
7,160,242 B2 1/2007 Yanai
7,229,258 B2 6/2007 Wood et al.
7,229,474 B2 6/2007 Hoffmann et al.
7,239,098 B2 7/2007 Masino
7,284,956 B2 10/2007 Nose et al.
7,338,521 B2 3/2008 Antaki et al.
7,462,019 B1 12/2008 Allarie et al.
7,497,116 B2 3/2009 Miyakoshi et al.
7,511,443 B2 3/2009 Townsend et al.
7,578,782 B2 8/2009 Miles et al.
7,591,777 B2 9/2009 Larose
7,645,225 B2 1/2010 Medvedev et al.
7,699,588 B2 4/2010 Mendler
7,854,631 B2 12/2010 Townsendl et al.
7,861,582 B2 1/2011 Miyakoshi et al.
7,887,479 B2 2/2011 Larose et al.
7,951,062 B2 5/2011 Morello
7,976,271 B2 7/2011 Larose et al.
8,152,493 B2 4/2012 Larose et al.
8,157,720 B2 4/2012 Marseille et al.
8,303,482 B2 11/2012 Schima et al.
8,382,830 B2 2/2013 Maher et al.
8,506,470 B2 8/2013 Larose et al.
8,517,699 B2 8/2013 Horvath
8,556,795 B2 10/2013 Bolyard et al.
8,597,350 B2 12/2013 Rudser et al.
8,764,621 B2 7/2014 Badstibner et al.
8,870,739 B2 10/2014 Larose et al.

(56) **References Cited**

U.S. PATENT DOCUMENTS

8,882,477	B2	11/2014	Fritz, IV et al.	
8,956,275	B2	2/2015	Bolyard et al.	
9,091,271	B2 *	7/2015	Bourque	A61M 1/101
2003/0021683	A1	1/2003	Capone et al.	
2004/0236420	A1	11/2004	Yamane et al.	
2005/0004421	A1	1/2005	Pacella et al.	
2005/0025630	A1	2/2005	Ayre et al.	
2005/0135948	A1	6/2005	Olsen et al.	
2005/0147512	A1	7/2005	Chen et al.	
2007/0100196	A1	5/2007	Larose et al.	
2009/0064755	A1	3/2009	Fleischli et al.	
2009/0234447	A1	9/2009	Larose et al.	
2010/0130809	A1	5/2010	Morello	
2010/0150749	A1	6/2010	Horvath	
2010/0152526	A1	6/2010	Pacella et al.	
2010/0241223	A1	9/2010	Lee et al.	
2010/0327687	A1	12/2010	Iannello et al.	
2011/0002794	A1	1/2011	Haefliger et al.	
2011/0031836	A1	2/2011	Nussbaumer	
2011/0054239	A1	3/2011	Sutton et al.	
2011/0071337	A1	3/2011	Thompson et al.	
2011/0144413	A1	6/2011	Foster	
2011/0187217	A1	8/2011	Nussbaumer	
2011/0237863	A1	9/2011	Ricci et al.	
2011/0245582	A1	10/2011	Zafirelis et al.	
2011/0313237	A1	12/2011	Miyakoshi et al.	
2012/0035411	A1	2/2012	Larose et al.	
2012/0046514	A1	2/2012	Bourque	
2012/0059212	A1	3/2012	Larose et al.	
2012/0134832	A1	5/2012	Wu	
2012/0226097	A1	9/2012	Smith et al.	
2012/0245680	A1 *	9/2012	Masuzawa	A61M 1/1086 623/3.11
2012/0245681	A1	9/2012	Casas et al.	
2012/0253103	A1	10/2012	Robert	
2012/0310036	A1	12/2012	Peters et al.	
2013/0331934	A1	12/2013	Kabir et al.	
2014/0100413	A1	4/2014	Casas et al.	
2014/0194985	A1	7/2014	Vadala, Jr.	
2014/0275723	A1	9/2014	Fritz, IV et al.	
2014/0303426	A1	10/2014	Kerkhoffs et al.	
2014/0357937	A1	12/2014	Reyes et al.	
2015/0051438	A1	2/2015	Taskin	

FOREIGN PATENT DOCUMENTS

EP	60569	12/1990
EP	378251	6/1994
EP	2357374	8/2011
GB	1491710	11/1977
JP	01257792	10/1989
JP	02016390	1/1990
JP	03088996	4/1991
JP	04148095	5/1992
JP	2000510929	8/2000
JP	2002512333	4/2002
JP	2003093500	4/2003
JP	D1373017	10/2009
JP	2011530315	12/2011
TW	D136032	7/2010
WO	9953974	10/1999
WO	2005032620	4/2005
WO	2006137496	12/2006
WO	2010015836	2/2010
WO	2010023815	3/2010
WO	2010036815	4/2010
WO	2012028181	3/2012

OTHER PUBLICATIONS

Barletta et al., Design of a bearing less blood pump, Proc.3rd Int. Symp. on Magnetic Suspension Technology, Dec. 13-15, 1995, pp. 265-274.

Izraelev et al., A Pasively-Suspended Tesla Pump Left Ventricular Assist Device, NIH Public Access, vol. 55, No. 6, 2009, pp. 556-561.

* cited by examiner

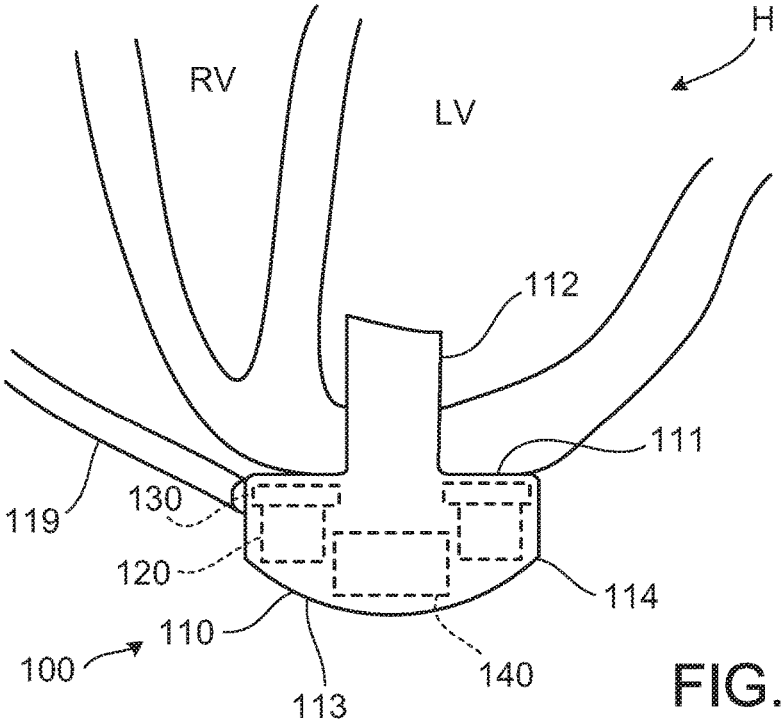
H
RV
LV
112
111
119
130
120
114
110
100
113
140

FIG. 1

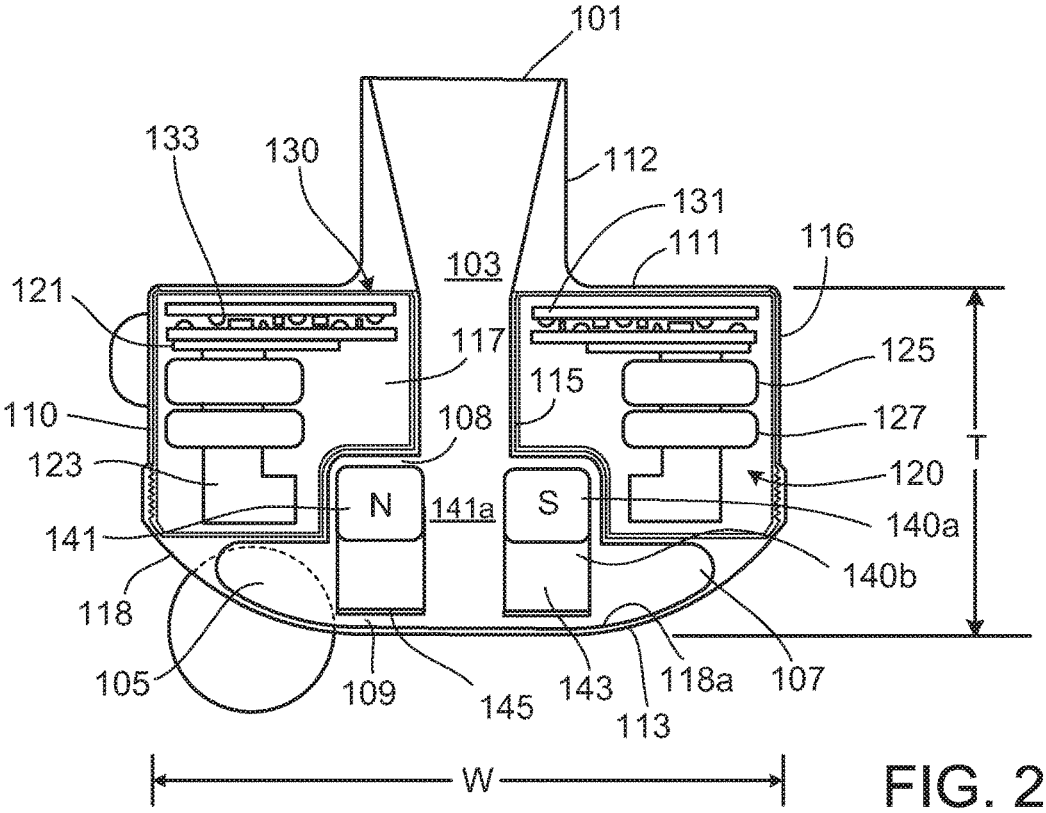
101
133
130
112
131
111
116
103
121
117
125
115
110
108
127
123
120
N
141a
S
140a
141
140b
118
105
109
145
143
113
118a
107
T
W

FIG. 2

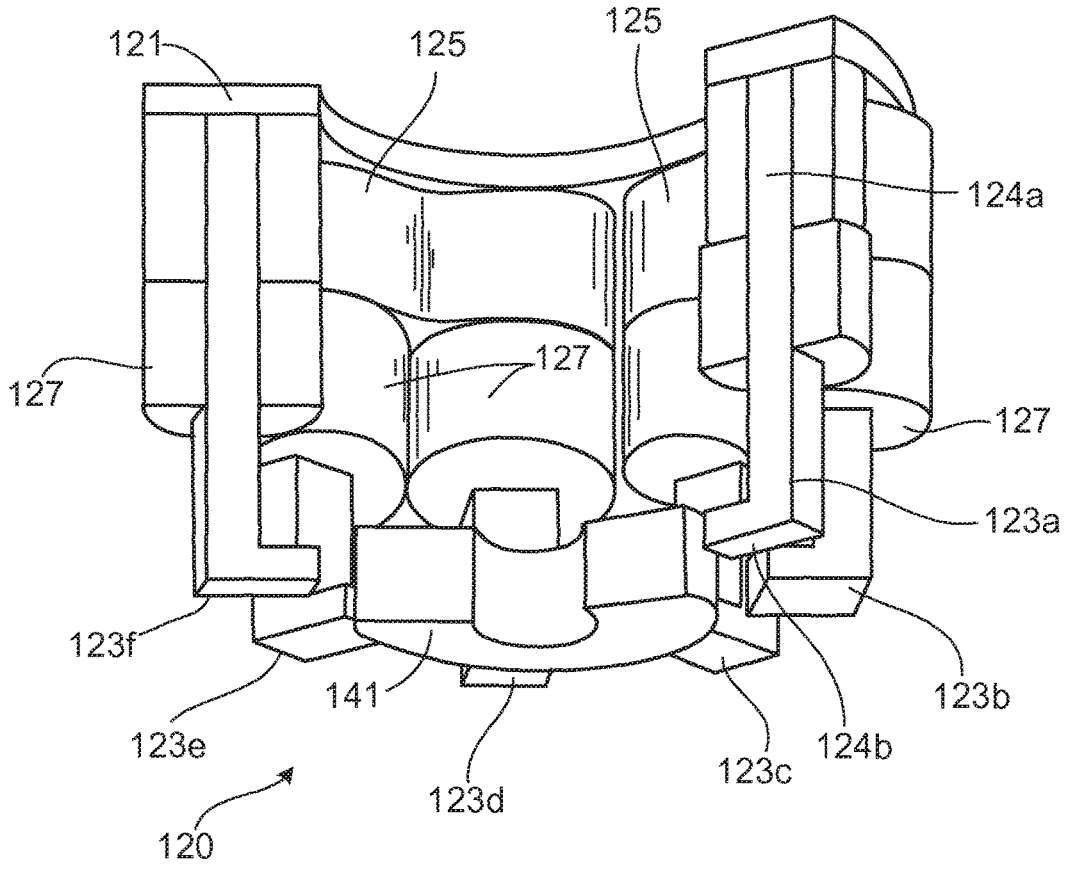
121
125
125
124a
127
127
127
123a
123f
123b
141
123e
124b
123c
123d
120

FIG. 3

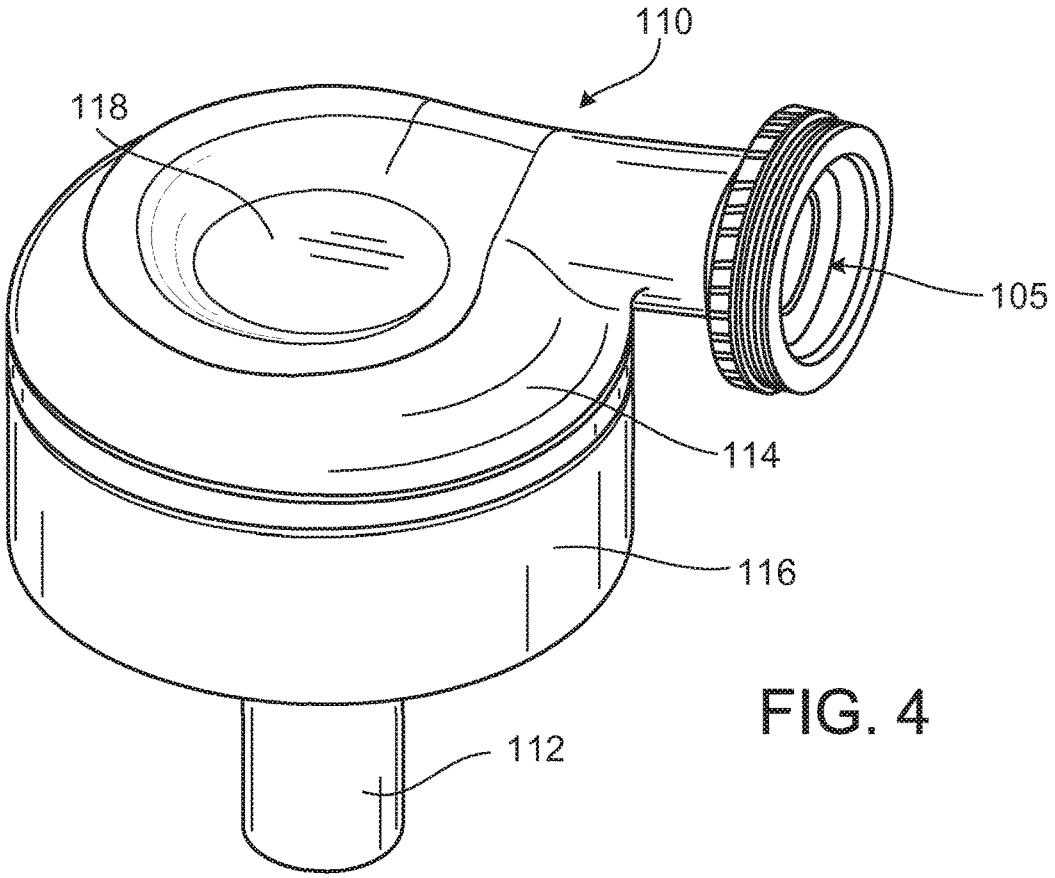

FIG. 4

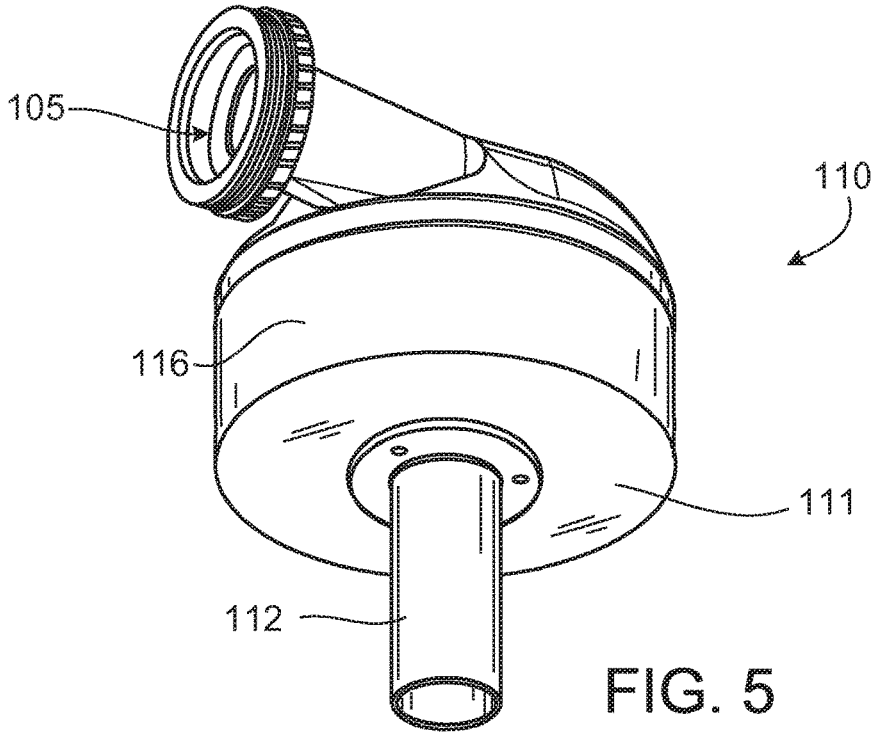

FIG. 5

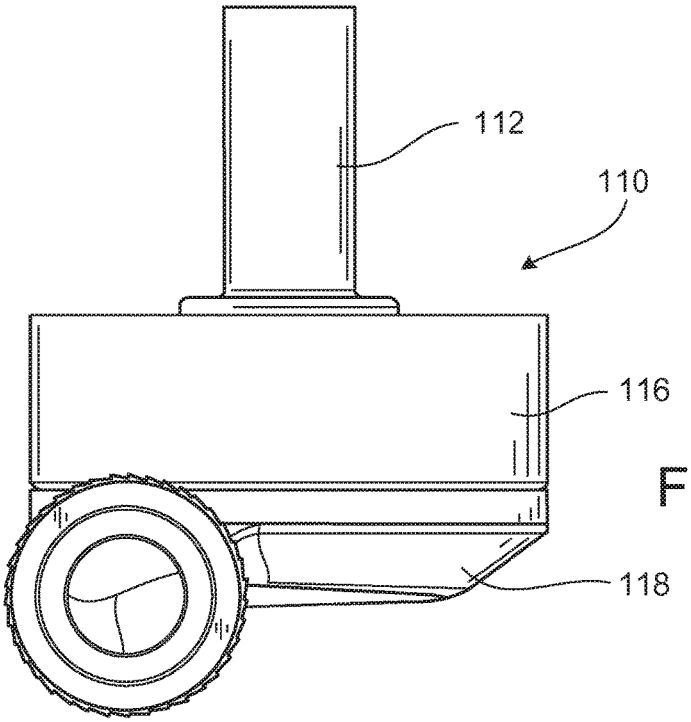

FIG. 6

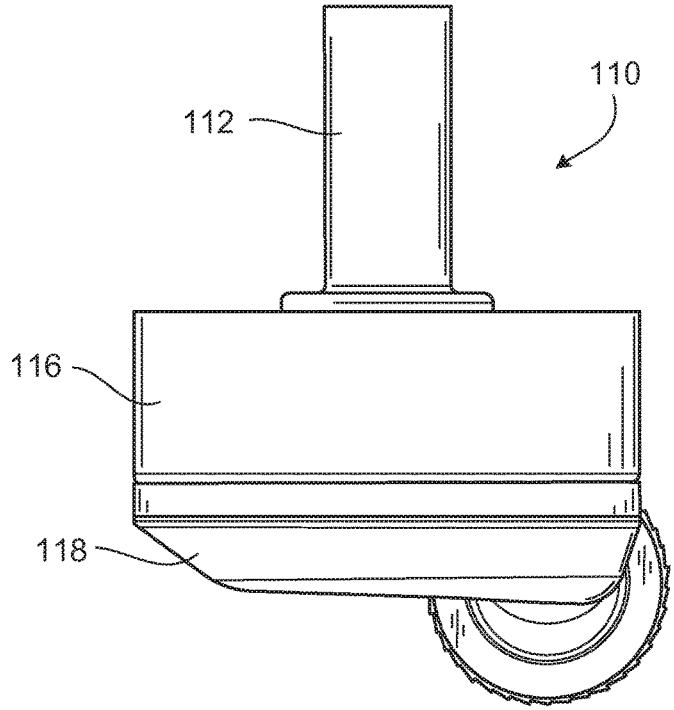

FIG. 7

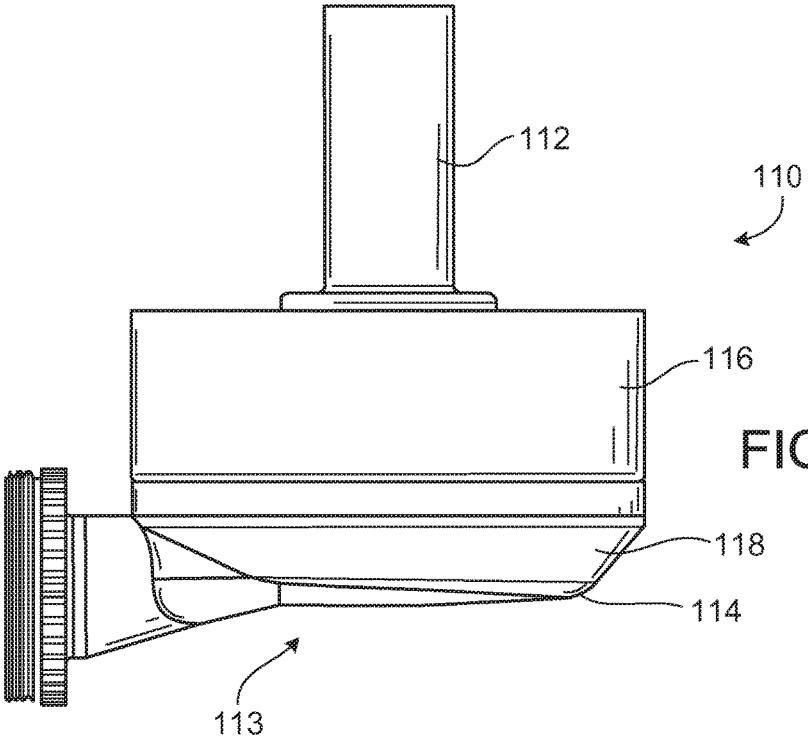

FIG. 8

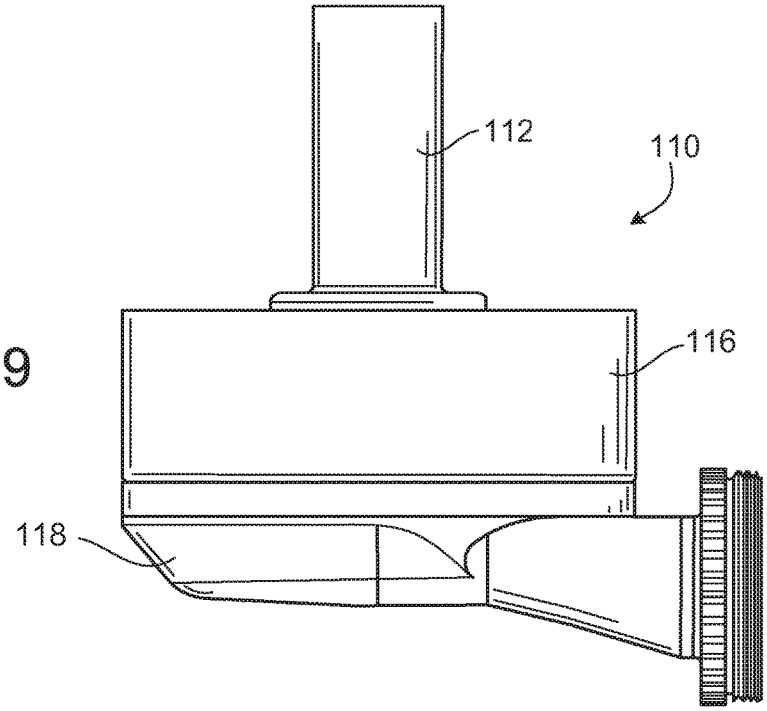

FIG. 9

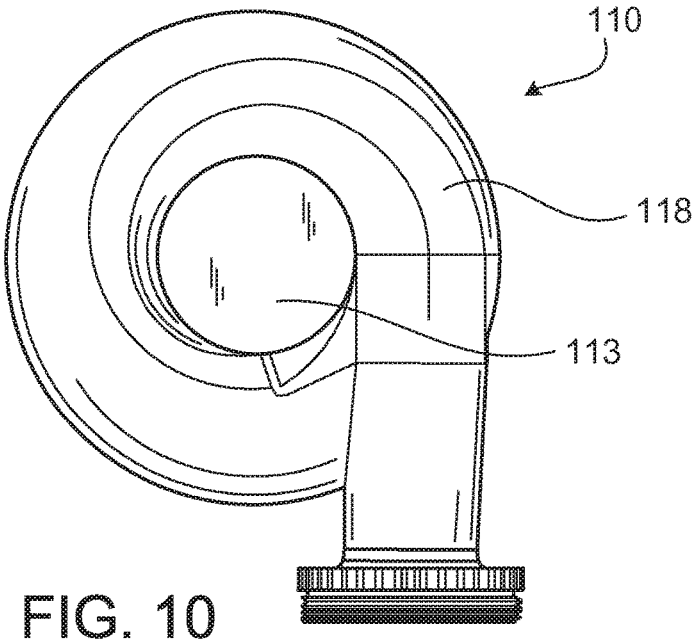

FIG. 10

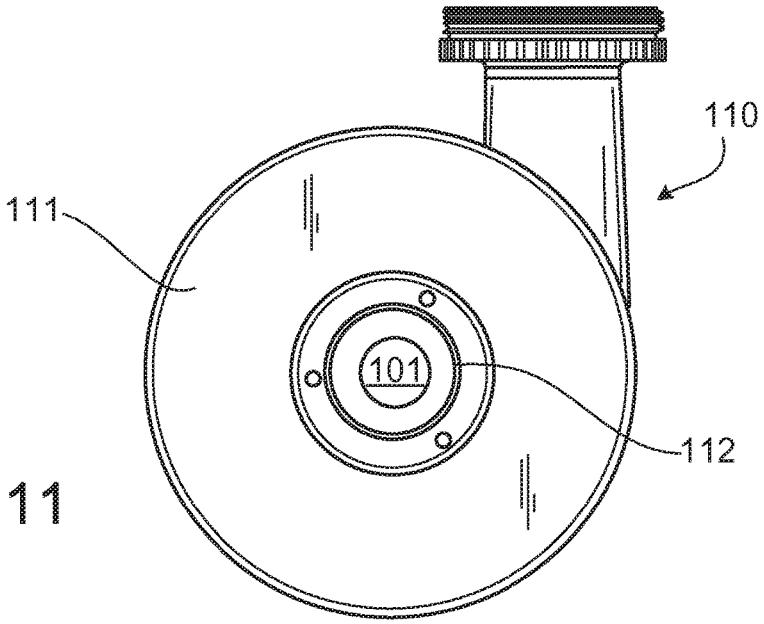

FIG. 11

IMPLANTABLE BLOOD PUMP

CROSS-REFERENCES TO RELATED APPLICATIONS

This application is a divisional of U.S. application Ser. No. 14/735,990, filed Jun. 10, 2015, now U.S. Pat. No. 9,675,741, issued Jun. 13, 2017, and titled "Implantable Blood Pump," which application is a continuation application of U.S. application Ser. No. 13/212,813, filed Aug. 18, 2011, now U.S. Pat. No. 9,091,271, issued Jul. 28, 2015, and titled "Implantable Blood Pump," which application claims the benefit of U.S. Provisional Application Ser. No. 61/375,504, filed Aug. 20, 2010, and titled "Implantable Blood Pump," the entire contents of which are incorporated herein by reference in their entirety.

FIELD

This description relates to implantable blood pumps.

BACKGROUND

Ventricular assist devices, known as VADs, are implantable blood pumps used for both short-term and long-term applications where a patient's heart is incapable of providing adequate circulation. For example, a patient suffering from heart failure may use a VAD while awaiting a heart transplant. In another example, a patient may use a VAD while recovering from heart surgery. Thus, a VAD can supplement a weak heart or can effectively replace the natural heart's function. VADs can be implanted in the patient's body and powered by an electrical power source outside the patient's body.

BRIEF SUMMARY

In one general aspect, an implantable blood pump includes a housing and a blood flow conduit. Within the housing, the blood pump includes a stator located about the blood flow conduit and a magnetically-levitated rotor.

In another general aspect, an implantable blood pump includes a housing defining an inlet opening and an outlet opening. Within the housing, a dividing wall defines a blood flow conduit extending between the inlet opening and the outlet opening of the housing. The blood pump has a rotary motor that includes a stator and a rotor. The stator is disposed within the housing circumferentially about the dividing wall such that the inner blood flow conduit extends through the stator.

In another general aspect, an implantable blood pump includes a puck-shaped housing having a first face defining an inlet opening, a peripheral sidewall, and a second face opposing the first face. The blood pump has an internal dividing wall defining an inner blood flow conduit extending between the inlet opening and an outlet opening of the housing. The puck-shaped housing has a thickness from the first face to the second face that is less than a width of the housing between opposing portions of the peripheral sidewall. The blood pump also has a motor having a stator and a rotor. The stator is disposed in the housing circumferentially about the blood flow conduit and includes magnetic levitation components operable to control an axial position and a radial position of the rotor. The rotor is disposed in the inner blood flow conduit and includes an impeller operable to pump blood from the inlet opening to the outlet opening through at least a portion of the magnetic levitation components of the stator.

Implementations of the above aspects may include one or more of the following features. For example, the stator is disposed circumferentially about at least a part of the rotor and is positioned relative to the rotor such that in use blood flows within the blood flow conduit through the stator before reaching the rotor. The rotor has permanent magnetic poles for magnetic levitation of the rotor. A passive magnetic control system is configured to control an axial position of the rotor relative to the stator, and an active electromagnetic control system is configured to radially center the rotor within the inner blood flow conduit. An electromagnetic control system controls at least one of a radial position and an axial position of the rotor relative to the stator, and the electromagnetic control system has control electronics located within the housing about the dividing wall.

The control electronics are located between the inlet opening and the stator. The control electronics can be configured to control the active magnetic control system. The rotor has only one magnetic moment. The stator includes a first coil for driving the rotor and a second coil for controlling a radial position of the rotor, and the first coil and the second coil are wound around a first pole piece of the stator. The housing has a first face that defines the inlet opening, a second face opposing the first face, and a peripheral wall extending from the first face to the second face. The housing includes a rounded transition from the second face to the peripheral wall. The housing defines a volute located such that in use blood flows within the blood flow conduit through the stator before reaching the volute. The volute can be located between the stator and the second face. The housing can also include a cap that includes the second face, defines at least part of the volute, and defines at least part of the outlet. The cap is engaged with the peripheral wall of the housing. The housing also includes an inlet cannula extending from the first face and in fluid communication with the inlet opening. The inlet cannula can be inserted into the patient's heart. The outlet opening is defined in the second face and/or the peripheral wall. A thickness of the housing between the first face and the second face is less than a width of the housing.

In another general aspect, a method includes inserting a puck-shaped blood pump housing into a patient's body. The blood pump is inserted such that an opening defined in a first flat face of the housing that is proximate to a stator of the blood pump faces the patient's heart. Additionally, the blood pump is inserted such that a second rounded face of the housing that is proximate to an impeller of the blood pump faces away from the patient's heart. The first face is disposed against a portion of the patient's heart such that the second face of the housing faces away from the heart of the patient. In some implementations, the method includes inserting an inlet cannula of the housing into the patient's heart.

In another general aspect, making a blood pump includes assembling a motor stator and control electronics in a puck-shaped housing circumferentially about an internal dividing wall. The internal dividing wall defines an inner blood flow conduit that extends from an inlet opening to an outlet opening of the housing. The stator is assembled in the housing such that the inner blood flow conduit extends through the motor stator. Disposed within the inner blood flow conduit is a magnetically-levitated rotor. The rotor is surrounded by the stator such that impeller blades carried by the rotor are downstream of the stator from the inlet opening.

In use, the impeller pumps blood from the inlet opening to the outlet opening through the stator.

Implementations may include one or more of the following features. For example, the rotor has only one magnetic moment. The stator includes at least one first coil for driving the rotor and at least one second coil for controlling a radial position of the rotor, the at least one first coil and the at least one second coil being wound around a first pole piece of the stator. The housing includes a first face that defines the inlet opening, and further comprising engaging an end cap with a peripheral wall of the housing, the end cap including a second face, defining at least part of a volute, and defining at least part of the outlet opening. The housing includes a rounded transition from the second face to the peripheral wall. The housing further includes an inlet cannula extending from the first face and in fluid communication with the inlet opening. A thickness of the housing between the first face and the second face is less than a width of the housing.

In another general aspect, a method of pumping blood includes magnetically rotating a centrifugal pump impeller of a blood pump device to draw blood from a patient's heart through an inlet opening of a housing of the blood pump device into an inner blood flow conduit within a stator in the housing, through the inner blood flow conduit, and through an outlet opening of the housing. The method includes selectively controlling a radial position of the impeller within the inner blood flow conduit.

The details of one or more implementations are set forth in the accompanying drawings and the description below. Other features will be apparent from the description and drawings, and from the claims.

BRIEF DESCRIPTION OF THE DRAWINGS

FIG. **1** is an illustration of a blood pump in a use position implanted in a patient's body.

FIG. **2** is a cross-sectional view of the blood pump of FIG. **1**.

FIG. **3** is a partial cut-away perspective view of a stator of a blood pump.

FIG. **4** is a bottom perspective view of a blood pump.

FIG. **5** is a top perspective view of the blood pump of FIG. **4**.

FIG. **6** is a front view of the blood pump of FIG. **4**.

FIG. **7** is a back view of the blood pump of FIG. **4**.

FIG. **8** is a right side view of the blood pump of FIG. **4**.

FIG. **9** is a left side view of the blood pump of FIG. **4**.

FIG. **10** is a bottom view of the blood pump of FIG. **4**.

FIG. **11** is a top view of the blood pump of FIG. **4**.

DETAILED DESCRIPTION

With reference to FIGS. **1** and **4-11**, a left ventricular assist blood pump **100** having a puck-shaped housing **110** is implanted in a patient's body with a first face **111** of the housing **110** positioned against the patient's heart H and a second face **113** of the housing **110** facing away from the heart H. The first face **111** of the housing **110** includes an inlet cannula **112** extending into the left ventricle LV of the heart H. The second face **113** of the housing **110** has a chamfered edge **114** to avoid irritating other tissue that may come into contact with the blood pump **100**, such as the patient's diaphragm. To construct the illustrated shape of the puck-shaped housing **110** in a compact form, a stator **120** and electronics **130** of the pump **100** are positioned on the inflow side of the housing toward first face I**11**, and a rotor **140** of the pump **100** is positioned along the second face **113**. This positioning of the stator **120**, electronics **130**, and rotor **140** permits the edge **114** to be chamfered along the contour of the rotor **140**, as illustrated in at least FIGS. **2**, **4**, and **6-9**, for example.

Referring to FIG. **2**, the blood pump **100** includes a dividing wall **115** within the housing **110** defining a blood flow conduit **103**. The blood flow conduit **103** extends from an inlet opening **101** of the inlet cannula **112** through the stator **120** to an outlet opening **105** defined by the housing **110**. The rotor **140** is positioned within the blood flow conduit **103**. The stator **120** is disposed circumferentially about a first portion **140***a* of the rotor **140**, for example about a permanent magnet **141**. The stator **120** is also positioned relative to the rotor **140** such that, in use, blood flows within the blood flow conduit **103** through the stator **120** before reaching the rotor **140**. The permanent magnet **141** has a permanent magnetic north pole N and a permanent magnetic south pole S for combined active and passive magnetic levitation of the rotor **140** and for rotation of the rotor **140**. The rotor **140** also has a second portion **140***b* that includes impeller blades **143**. The impeller blades **143** are located within a volute **107** of the blood flow conduit such that the impeller blades **143** are located proximate to the second face **113** of the housing.

The puck-shaped housing **110** further includes a peripheral wall **116** that extends between the first face **111** and a removable cap **118**. As illustrated, the peripheral wall **116** is formed as a hollow circular cylinder having a width W between opposing portions of the peripheral wall **116**. The housing **110** also has a thickness T between the first face I**11** and the second face **113** that is less than the width W. The thickness T is from about 0.5 inches to about 1.5 inches, and the width W is from about 1 inch to about 4 inches. For example, the width W can be approximately 2 inches, and the thickness T can be approximately 1 inch.

The peripheral wall **116** encloses an internal compartment **117** that surrounds the dividing wall **115** and the blood flow conduit **103**, with the stator **120** and the electronics **130** disposed in the internal compartment **117** about the dividing wall **115**. The removable cap **118** includes the second face **113**, the chamfered edge **114**, and defines the outlet opening **105**. The cap **118** can be threadably engaged with the peripheral wall **116** to seal the cap **118** in engagement with the peripheral wall **116**. The cap **118** includes an inner surface **118***a* of the cap **118** that defines the volute **107** that is in fluid communication with the outlet opening **105**.

Within the internal compartment **117**, the electronics **130** are positioned adjacent to the first face **111** and the stator **120** is positioned adjacent to the electronics **130** on an opposite side of the electronics **130** from the first face **111**. The electronics **130** include circuit boards **131** and various components **133** carried on the circuit boards **131** to control the operation of the pump **100** by controlling the electrical supply to the stator **120**. The housing **110** is configured to receive the circuit boards **131** within the internal compartment **117** generally parallel to the first face Ill for efficient use of the space within the internal compartment **117**. The circuit boards also extend radially-inward towards the dividing wall **115** and radially-outward towards the peripheral wall **116**. For example, the internal compartment **117** is generally sized no larger than necessary to accommodate the circuit boards **131**, and space for heat dissipation, material expansion, potting materials, and/or other elements used in installing the circuit boards **131**. Thus, the external shape of the housing **110** proximate the first face **111** generally fits the

shape of the circuits boards **131** closely to provide external dimensions that are not much greater than the dimensions of the circuit boards **131**.

With continued reference to FIG. **2** and with reference to FIG. **3**, the stator **120** includes a back iron **121** and pole pieces **123***a*-**123***f* arranged at intervals around the dividing wall **115**. The back iron **121** extends around the dividing wall **115** and is formed as a generally flat disc of a ferromagnetic material, such as steel, in order to conduct magnetic flux. The back iron **121** is arranged beside the control electronics **130** and provides a base for the pole pieces **123***a*-**123***f*.

Each of the pole piece **123***a*-**123***f* is L-shaped and has a drive coil **125** for generating an electromagnetic field to rotate the rotor **140**. For example, the pole piece **123***a* has a first leg **124***a* that contacts the back iron **121** and extends from the back iron **121** towards the second face **113**. The pole piece **123***a* also has a second leg **124***b* that extends from the first leg **124***a* towards the dividing wall **115** proximate the location of the permanent magnet **141** of the rotor **140**. Each of the pole pieces **123***a*-**123***f* also has a levitation coil **127** for generating an electromagnetic field to control the radial position of the rotor **140**.

Each of the drive coils **125** and the levitation coils **127** includes multiple windings of a conductor around the pole pieces **123***a*-**123***f* Particularly, each of the drive coils **125** is wound around two adjacent ones of the pole pieces **123**, such as pole pieces **123***d* and **123***e*, and each levitation coil **127** is wound around a single pole piece. The drive coils **125** and the levitation coils **127** are wound around the first legs of the pole pieces **123**, and magnetic flux generated by passing electrical current though the coils **125** and **127** during use is conducted through the first legs and the second legs of the pole pieces **123** and the back iron **121**. The drive coils **125** and the levitation coils **127** of the stator **120** are arranged in opposing pairs and are controlled to drive the rotor and to radially levitate the rotor **140** by generating electromagnetic fields that interact with the permanent magnetic poles S and N of the permanent magnet **141**. Because the stator **120** includes both the drive coils **125** and the levitation coils **127**, only a single stator is needed to levitate the rotor **140** using only passive and active magnetic forces. The permanent magnet **141** in this configuration has only one magnetic moment and is formed from a monolithic permanent magnetic body **141**. For example, the stator **120** can be controlled as discussed in U.S. Pat. No. 6,351,048, the entire contents of which are incorporated herein by reference. The control electronics **130** and the stator **120** receive electrical power from a remote power supply via a cable **119** (FIG. **1**).

The rotor **140** is arranged within the housing **110** such that its permanent magnet **141** is located upstream of impeller blades in a location closer to the inlet opening **101**. The permanent magnet **141** is received within the blood flow conduit **103** proximate the second legs **124***b* of the pole pieces **123** to provide the passive axial centering force though interaction of the permanent magnet **141** and ferromagnetic material of the pole pieces **123**. The permanent magnet **141** of the rotor **140** and the dividing wall **115** form a gap **108** between the permanent magnet **141** and the dividing wall **115** when the rotor **140** is centered within the dividing wall **115**. The gap **108** may be from about 0.2 millimeters to about 2 millimeters. For example, the gap **108** is approximately 1 millimeter. The north permanent magnetic pole N and the south permanent magnetic pole S of the permanent magnet **141** provide a permanent magnetic attractive force between the rotor **140** and the stator **120** that acts as a passive axial centering force that tends to maintain the rotor **140** generally centered within the stator **120** and tends to resist the rotor **140** from moving towards the first face Ill or towards the second face **113**. When the gap **108** is smaller, the magnetic attractive force between the permanent magnet **141** and the stator **120** is greater, and the gap **108** is sized to allow the permanent magnet **141** to provide the passive magnetic axial centering force having a magnitude that is adequate to limit the rotor **140** from contacting the dividing wall **115** or the inner surface **118***a* of the cap **118**. The rotor **140** also includes a shroud **145** that covers the ends of the impeller blades **143** facing the second face **113** that assists in directing blood flow into the volute **107**. The shroud **145** and the inner surface **118***a* of the cap **118** form a gap **109** between the shroud **145** and the inner surface **118***a* when the rotor **140** is levitated by the stator **120**. The gap **109** is from about 0.2 millimeters to about 2 millimeters. For example, the gap **109** is approximately 1 millimeter.

As blood flows through the blood flow conduit **103**, blood flows through a central aperture **141** a formed through the permanent magnet **141**. Blood also flows through the gap **108** between the rotor **140** and the dividing wall **115** and through the gap **109** between the shroud **145** and the inner surface **108***a* of the cap **118**. The gaps **108** and **109** are large enough to allow adequate blood flow to limit clot formation that may occur if the blood is allowed to become stagnant. The gaps **108** and **109** are also large enough to limit pressure forces on the blood cells such that the blood is not damaged when flowing through the pump **100**. As a result of the size of the gaps **108** and **109** limiting pressure forces on the blood cells, the gaps **108** and **109** are too large to provide a meaningful hydrodynamic suspension effect. That is to say, the blood does not act as a bearing within the gaps **108** and **109**, and the rotor is only magnetically-levitated.

Because the rotor **140** is radially suspended by active control of the levitation coils **127** as discussed above, and because the rotor **140** is axially suspended by passive interaction of the permanent magnet **141** and the stator **120**, no rotor levitation components are needed proximate the second face **113**. The incorporation of all the components for rotor levitation in the stator **120** (i.e., the levitation coils **127** and the pole pieces **123**) allows the cap **118** to be contoured to the shape of the impeller blades **143** and the volute **107**. Additionally, incorporation of all the rotor levitation components in the stator **120** eliminates the need for electrical connectors extending from the compartment **117** to the cap **118**, which allows the cap to be easily installed and/or removed and eliminates potential sources of pump failure.

In use, the drive coils **125** of the stator **120** generates electromagnetic fields through the pole pieces **123** that selectively attract and repel the magnetic north pole N and the magnetic south pole S of the rotor **140** to cause the rotor **140** to rotate within stator **120**. As the rotor **140** rotates, the impeller blades **143** force blood into the volute **107** such that blood is forced out of the outlet opening **105**. Additionally, the rotor draws blood into pump **100** through the inlet opening **101**. As blood is drawn into the blood pump by rotation of the impeller blades **143** of the rotor **140**, the blood flows through the inlet opening **101** and flows through the control electronics **130** and the stator **120** toward the rotor **140**. Blood flows through the aperture **141***a* of the permanent magnet **141** and between the impeller blades **143**, the shroud **145**, and the permanent magnet **141**, and into the volute **107**. Blood also flows around the rotor **140**, through the gap **108** and through the gap **109** between the shroud **145** and the inner surface **118***a* of the cap **118**. The blood exits the volute **107** through the outlet opening **105**.

A number of implementations have been described. Nevertheless, it will be understood that various modifications may be made without departing from the spirit and scope of the claimed invention. For example, the cap **118** can be engaged with the peripheral wall **116** using a different attachment mechanism or technique, including snap-fit engagement, adhesives, or welding. Additionally, while the cap **118** has been described as defining the outlet opening **105** and the chamfered edge **114**, the outlet opening **105** and/or the chamfered edge **114** can be defined by the peripheral wall **116** or by both the peripheral wall **116** and the cap **118**. Similarly, the dividing wall **115** can be formed as part of the cap **118**.

Additionally, the rotor **140** can include two or more permanent magnets. The number and configuration of the pole pieces **123** can also be varied. The operation of the control electronics **130** is selected to account for the number and position of pole pieces of the stator and permanent magnets of the rotor. Also, the cap **118** can be engaged with the peripheral wall using other techniques, such as adhesives, welding, snap-fit, shrink-fit, or other technique or structure. Similarly, the first face Ill may be formed from a separate piece of material than the peripheral wall **116** and the first face **111**, including the inlet cannula **112**, can be attached to the peripheral wall **116**, such as by welding, after the control electronics **130** and the stator **120** have been mounted in the internal compartment **117**. The shroud **145** may be omitted and optionally replaced by other flow control devices to achieve a desired pump efficiency. As another option, the control electronics **130** can be located external to the pump **100**, such as in a separate housing implanted in the patient's abdomen, or external to the patient's body.

In some implementations, the dimensions of the housing **110** can be larger or smaller than those described above. Similarly, the ratio of the width W of the housing **110** to the thickness T of the housing can be different than the ratio described above. For example, the width W can be from about 1.1 to about 5 times greater than the thickness T. Additionally, the permanent magnet **141** of the rotor **140** can include two or more pairs of north and south magnetic poles. While the peripheral wall **116** and the dividing wall **115** are illustrated as cylinders having circular cross-sectional shapes, one or both can alternatively be formed having other cross-sectional shapes, such as oval, or an irregular shape. Similarly, the peripheral wall **116** can be tapered such that the housing does not have a constant width W from the first face Ill to the second face **113**.

As mentioned above, in some implementations, the blood pump **100** can be used to assist a patient's heart during a transition period, such as during a recovery from illness and/or surgery or other treatment. In other implementations, the blood pump **100** can be used to partially or completely replace the function of the patient's heart on a generally permanent basis, such as where the patient's aortic valve is surgically sealed.

Accordingly, other embodiments are within the scope of the following claims.

What is claimed is:

1. A method for assisting blood circulation in a patient, the method comprising:

drawing a flow of blood from a patient's heart into a blood flow channel formed by a housing;

passing the flow of blood through a motor stator to a rotor disposed within the blood flow channel, the motor stator being arranged circumferentially around the blood flow channel, the rotor having permanent magnetic poles for magnetic levitation and rotation of the rotor;

passing a first portion of the flow of blood through a central aperture formed through the rotor;

passing a second portion of the flow of blood through a gap formed between the rotor and the housing;

controlling delivery of current to the motor stator to control a radial position of the rotor within the blood flow channel and to control rotation of the rotor within the blood flow channel, the rotor being rotated around a rotor axis of rotation;

levitating the rotor within the blood flow channel in the direction of the rotor axis of rotation via only a passive magnetic interaction between the rotor and the motor stator; and

outputting the flow of blood from the blood flow channel to the patient.

2. The method of claim **1**, wherein the motor stator axially overlaps the permanent magnetic poles of the rotor with respect to the rotor axis of rotation.

3. The method of claim **1**, wherein the motor stator comprises a back iron and a plurality of pole pieces supported by the back iron, the back iron being configured to conduct magnetic flux and having an aperture through which the blood flow channel passes.

4. The method of claim **3**, further comprising supporting control electronics within the housing and between the back iron and the patient's heart, the control electronics being configured to control the delivery of current to the motor stator for controlling the rotation and radial levitation of the rotor within the blood flow channel.

5. The method of claim **1**, wherein the rotor and housing are configured and the delivery of current to the motor stator is controlled such that the gap between the rotor and the housing is between about 0.2 mm to about 2 mm.

6. The method of claim **1**, comprising impelling the first portion of the flow of blood via impeller blades of the rotor to force the flow of blood from the blood flow channel to the patient.

7. The method of claim **6**, wherein:

the first portion of the flow of blood is impelled substantially centrifugally via the rotor; and

the flow of blood is output from the blood flow channel in a direction transverse to the rotor axis of rotation.

8. The method of claim **1**, wherein the rotor is levitated within the blood flow channel in the direction of the rotor axis of rotation such that the rotor is separated from the housing in the direction of the rotor axis of rotation via axial gaps between about 0.2 mm to about 2 mm.

9. A method for assisting blood circulation in a patient, the method comprising:

drawing a flow of blood from a patient's heart into a blood flow channel formed by a housing;

passing the flow of blood through a motor stator to a rotor disposed within the blood flow channel, the motor stator being arranged circumferentially around the blood flow channel, the rotor having permanent magnetic poles for magnetic levitation and rotation of the rotor;

passing a first portion of the flow of blood through a central aperture formed through the rotor;

passing a second portion of the flow of blood through a gap formed between the rotor and the housing;

controlling the motor stator to act as a radial bearing for magnetic levitation of the rotor and to rotate the rotor within the blood flow channel,

levitating the rotor within the blood flow channel in the direction of the rotor axis of rotation via only a passive magnetic interaction between the rotor and the motor stator; and

outputting the flow of blood from the blood flow channel to the patient.

10. The method of claim **9**, wherein the motor stator axially overlaps the permanent magnetic poles of the rotor with respect to the rotor axis of rotation.

11. The method of claim **9**, wherein the motor stator comprises a back iron and a plurality of pole pieces supported by the back iron, the back iron being configured to conduct magnetic flux and having an aperture through which the blood flow channel passes.

12. The method of claim **11**, further comprising supporting control electronics within the housing and between the back iron and the patient's heart, the control electronics being configured to control the delivery of current to the motor stator for controlling the rotation and radial levitation of the rotor within the blood flow channel.

13. The method of claim **9**, wherein the rotor and housing are configured and the delivery of current to the motor stator is controlled such that the gap between the rotor and the housing is between about 0.2 mm to about 2 mm.

14. The method of claim **9**, comprising impelling the first portion of the flow of blood via impeller blades of the rotor to force the flow of blood from the blood flow channel to the patient.

15. The method of claim **14**, wherein:

the first portion of the flow of blood is impelled substantially centrifugally via the rotor; and

the flow of blood is output from the blood flow channel in a direction transverse to the rotor axis of rotation.

16. The method of claim **9**, wherein the rotor is levitated within the blood flow channel in the direction of the rotor axis of rotation such that the rotor is separated from the housing in the direction of the rotor axis of rotation via axial gaps between about 0.2 mm to about 2 mm.

* * * * *