Artificial Organs
30(5):324–338, Blackwell Publishing, Inc.
© 2006, Copyright the Authors
Journal compilation © 2006, International Center for Artificial Organs and Transplantation

Third-generation Blood Pumps With Mechanical Noncontact Magnetic Bearings

*Hideo Hoshi, †Tadahiko Shinshi, and *Setsuo Takatani

**Department of Artificial Organs, Institute of Biomaterials and Bioengineering, Tokyo Medical and Dental University, Tokyo; and †Precision and Intelligence Laboratory, Tokyo Institute of Technology, Yokohama, Japan*

Abstract: This article reviews third-generation blood pumps, focusing on the magnetic-levitation (maglev) system. The maglev system can be categorized into three types: (i) external motor-driven system, (ii) direct-drive motor-driven system, and (iii) self-bearing or bearingless motor system. In the external motor-driven system, Terumo (Ann Arbor, MI, U.S.A.) DuraHeart is an example where the impeller is levitated in the axial or *z*-direction. The disadvantage of this system is the mechanical wear in the mechanical bearings of the external motor. In the second system, the impeller is made into the rotor of the motor, and the magnetic flux, through the external stator, rotates the impeller, while the impeller levitation is maintained through another electromagnetic system. The Berlin Heart (Berlin, Germany) INCOR is the best example of this principle where one-axis control combination with hydrodynamic force achieves high performance. In the third system, the stator core is shared by the levitation and drive coil to make it as if the bearing does not exist. Levitronix CentriMag (Zürich, Switzerland), which appeared recently, employs this concept to achieve stable and safe operation of the extracorporeal system that can last for a duration of 14 days. Experimental systems including HeartMate III (Thoratec, Woburn, MA, U.S.A.), HeartQuest (WorldHeart, Ottawa, ON, Canada), MagneVAD (Gold Medical Technologies, Valhalla, NY, U.S.A.), MiTiHeart (MiTi Heart, Albany, NY, U.S.A.), Ibaraki University's Heart (Hitachi, Japan) and Tokyo Medical and Dental University/Tokyo Institute of Technology's disposable and implantable maglev blood pumps are also reviewed. In reference to second-generation blood pumps, such as the Jarvik 2000 (Jarvik Heart, New York, NY, U.S.A.), which is showing remarkable achievement, a question is raised whether a complicated system such as the maglev system is really needed. We should pay careful attention to future clinical outcomes of the ongoing clinical trials of the second-generation devices before making any further remarks. What is best for patients is the best for everyone. We should not waste any efforts unless they are actually needed to improve the quality of life of heart-failure patients. **Key Words:** Third-generation blood pumps—Second-generation blood pumps—Magnetic levitation—Hydrodynamic levitation—Mechanical noncontact blood pumps.

The progress of rotary blood pump technology has been so fast that during the last 5 years, so-called second-generation rotary blood pumps with blood-immersed bearings such as the MicroMed (Houston, TX, U.S.A.) DeBakey ventricular assist device (VAD) (1), the Jarvik 2000 FlowMaker (Jarvik Heart) (2), and the HeartMate II (Thoratec) (3) whose developments had been started in 1995 have been implanted in selected end-stage cardiac patients for bridge to transplantation and for destination therapy (DT). Although considered unphysiological, the continuous flow or reduced pulsatility continues to work in humans for a duration of as long as 5.5 years (4). Beyond second-generation devices, third-generation mechanical noncontact devices utilizing magnetic suspension mechanisms, such as the Terumo DuraHeart (5) and the Berlin Heart INCOR system (6), and hydrodynamic bearing mechanisms, such as Arrow International's (Reading, PA, U.S.A.) CorAide and Ventracor's (Chatswood, NSW, Australia) VentrAssist VADs (7,8), are making their way into clinical applications. It was exciting to hear the successful clinical outcomes of various rotary blood pumps reported at the 13th International Society for Rotary Blood Pumps (ISRBP) Congress from September 14

Presented in part at the 13th Congress of the International Society for Rotary Blood Pumps held September 14–16, 2005, in Tokyo, Japan.
Received February 2006.
Address correspondence and reprint requests to Dr. Setsuo Takatani, Department of Artificial Organs, Institute of Biomaterials and Bioengineering, Tokyo Medical and Dental University, 2-3-10 Surugadai, Kanda, Chiyoda-ku, Tokyo 101-0062, Japan. E-mail: takatani.ao@tmd.ac.jp

Abbott v. Miracor, IPR2025-00115
Abbott Ex. 1046, p. 1 of 15

to 16 in Tokyo, Japan. In addition to clinical outcomes, new devices in the experimental stage and those moving into clinical trials were updated.

Looking back at the history of rotary blood pump technology, it was in 1980 when the Cleveland Clinic group reported the survival of animals under ventricular fibrillation and completely nonpulsatile blood flow generated using a pair of magnetically coupled centrifugal blood pumps with a shaft seal mechanism (9–12). A purge system had been employed to lubricate the seal area behind the impeller that separated the blood chamber from the motor chamber. The management of animals as long as 99 days with the completely depulsed pulmonary and systemic blood flow took a tremendous effort requiring to change the pump head every week or so due to wear of the lip seal causing leakage of the blood into the motor chamber or the excessive purge fluid leaking into the blood stream. The first successful animal that survived for 34 days expired due to stoppage of the left pump that was caused by a blood clot formed around the shaft seal area. These pilot studies, however, proved that the continuous flow was not a limitation to an animal's survival, provided that adequate arterial pressure and blood flow were maintained. It was suggested that rotary blood pumps with a simple mechanism without requiring inflow and outflow valves might be a simpler way of realizing a compact, implantable blood pump system, provided shaft seal problems were solved. Blood-immersed mechanical contact bearings resulted in wear of materials as well as heat generation that led to device malfunction and thrombus formation around the contact area.

The competitive efforts in reliable rotary blood pump development started in mid-1980s in Europe, the U.S.A., and Japan. This momentum was connected to the formation of the ISRBP in 1993. In 1995, the U.S.A. launched the Innovative Ventricular Assist System (IVAS) program in which VADs having 5-year durability were pursued to possibly link with other therapies while the patients were supported by the device. Jarvik 2000 and HeartMate II axial flow devices, and the CorAide centrifugal pump came out of the IVAS program together with the MicroMed DeBakey VAD developed separately under a joint collaboration between Baylor College of Medicine, Houston, TX, U.S.A., and the National Space and Aeronautics Agency (NASA). As reported at the 13th ISRBP meeting, the second-generation continuous flow devices with blood-immersed bearings demonstrated that continuous flow worked in patients, but with limited reliability because of the wear problem in the contact bearings. It was projected that the expected life span of the blood-immersed bearings of second-generation blood pumps should be around 5 years. Beyond a 5-year duration and for permanent support or DT in those who are ineligible for heart transplantation, what is called "third-generation blood pumps" without mechanical contact bearings were proposed, and several systems are already making their way into clinical applications.

This article reviews the concepts and currently available third-generation continuous flow devices, focusing on the magnetically suspended continuous flow pumps. Although hydrodynamic mechanical noncontact blood pumps also fit into the category of the third-generation blood pumps, they are beyond the scope of this review.

HISTORY AND CONCEPT OF MAGNETIC-LEVITATION (MAGLEV) BLOOD PUMPS

The maglev allows suspension of a moving element without any mechanical contact, thus eliminating wear that will take place at the contact surface, and heat generation. The technology of maglev was first applied for rotating machinery by the University of Virginia research group in 1950 (13). Application for rotary blood pumps was reported by Akamatsu et al. in 1992 (14,15) and Allaire et al. in 1996 (16). The technology developed by Akamatsu et al. was transferred to Terumo Corporation in 1995 and was supported by the Japanese government's New Energy and Industrial Technology Development Organization from 1995 to 2000. The DuraHeart VAD was thus born in 2001 when the spin-off company Terumo Heart was formed in Michigan to continue with the development process.

The maglev system developed by Allaire et al. for centrifugal rotary blood pump (CRBP) at the University of Virginia utilized a five-degree-of-freedom (DOF) levitation system to suspend the impeller, while the impeller was rotated by a direct drive stator. This system had a length of 196 mm, a diameter of 115 mm, and a weight of 365 g. A flow rate of 6 L/min and a head pressure of 100 mm Hg were obtained at a rotational speed of 2400 rpm. The maximum flow was 10 L/min. A power of around 50 W was required to produce the bias flux and copper loss with a large current. In addition, heat generation and low stiffness in controllability were the problems of this system.

Many systems followed the successful application and implementation of the maglev concept by Akamatsu et al. and Allaire et al., including the Berlin Heart INCOR axial flow device, the Levitronix CentriMag extracorporeal device, the HeartMate III, the

15251594, 2006, 5, Downloaded from https://onlinelibrary.wiley.com/doi/10.1111/j.1525-1594.2006.00222.x by University Of California - Davis, Wiley Online Library on [18/02/2025]. See the Terms and Conditions (https://onlinelibrary.wiley.com/terms-and-conditions) on Wiley Online Library for rules of use; OA articles are governed by the applicable Creative Commons License

Abbott v. Miracor, IPR2025-00115
Abbott Ex. 1046, p. 2 of 15

HeartQuest (WorldHeart), the MagneVAD (Gold Medical Technologies), the Ibaraki University (Mito, Japan) System, and the Tokyo Medical and Dental University/Tokyo Institute of Technology (TMDU/TIT) system.

The concept of maglev is summarized in Fig. 1. It can be categorized into (i) external motor-driven system, (ii) direct-drive system, and (iii) self-bearing system. In the external motor-driven system, a motor is used to induce magnetic coupling force to the impeller, while a separate levitation system controls the impeller suspension. The shortcomings of this system may be the requirement of mechanical bearings that should support the rotation of the motor. In the direct-drive system, the impeller becomes the motor rotor, while a separate levitation system is built into the system to realize magnetic suspension. In the third system, both the drive and the levitation coils share the same stator core to make it like a self-bearing system. What is called "self-bearing" or "bearingless" motor was investigated by Chiba (17), Bichsel (18), and Shöb (19) in the beginning of the 1990s. The control and drive are also available in the radial and axial directions. In the following section, an example of the clinical maglev system in each concept is presented.

CLINICAL MAGLEV BLOOD PUMPS

Terumo DuraHeart: external motor-driven system (20–27)

The Terumo DuraHeart is an example of an external motor-driven axial levitation system. The maglev is in the axial z-direction. Figure 2 shows the levitation and drive mechanisms of the Terumo DuraHeart system. The implantable DuraHeart system consists of a titanium pumping unit, a titanium inflow and outflow conduit, and a drive and control console. A displacement volume of 180 mL, a weight of 540 g, an external diameter of 72 mm, and a height of 45 mm were attained, allowing the pump to be implanted in the patients with a body surface area (BSA) of <1.1 m^2. The pumping unit consists of an upper housing with the levitation system, impeller, and bottom housing. Three electromagnets and three

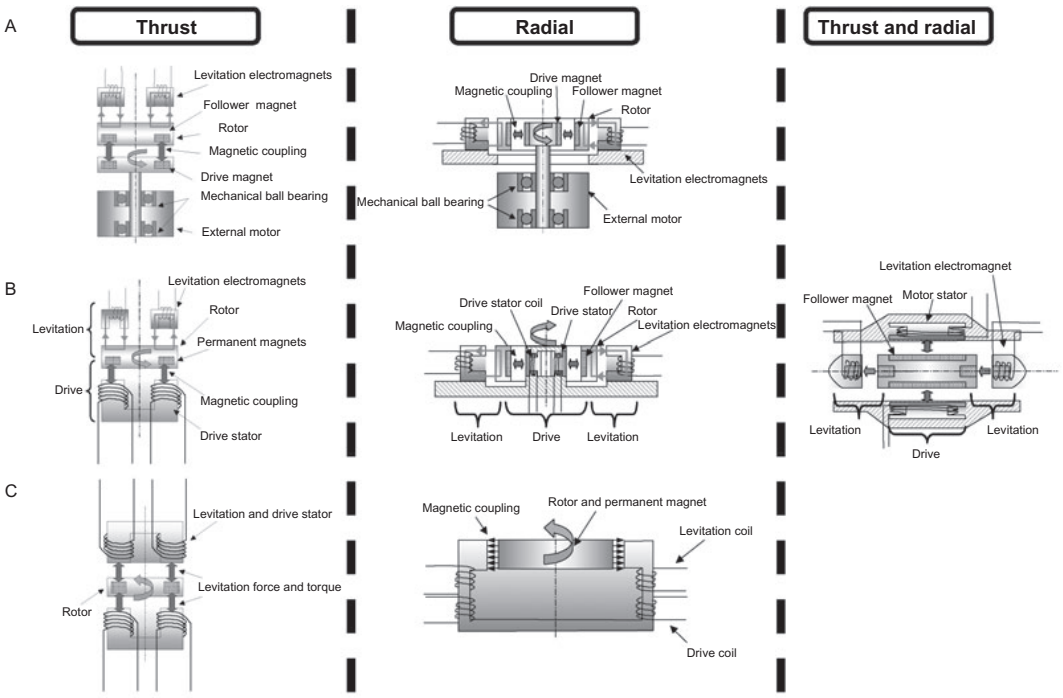

FIG. 1. Conceptual representations of maglev systems. They are (A) external motor-driven system, (B) direct-drive system, and (C) self-bearing or bearingless system. Each levitation can be implemented in the thrust or radial direction, or a combination of both directions.

15251594, 2006, 5, Downloaded from https://onlinelibrary.wiley.com/doi/10.1111/j.1525-1594.2006.00222.x by University Of California - Davis, Wiley Online Library on [18/02/2025]. See the Terms and Conditions (https://onlinelibrary.wiley.com/terms-and-conditions) on Wiley Online Library for rules of use; OA articles are governed by the applicable Creative Commons License

Abbott v. Miracor, IPR2025-00115
Abbott Ex. 1046, p. 3 of 15

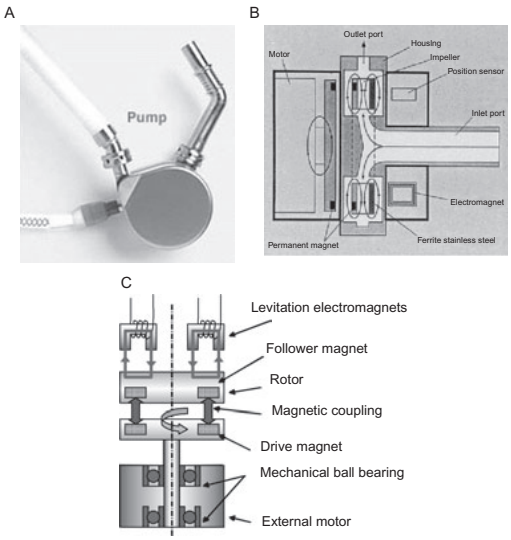

FIG. 2. (A) Terumo DuraHeart; (B) schematic representation of the maglev concept; and (C) levitation and drive system schematic.

position sensors are mounted in the upper housing. Tilting and axial displacements of the impeller are monitored and controlled using a three-DOF control. A levitated impeller is driven through a magnetic coupling force from the direct current brushless motor mounted outside. Radial impeller movement is passively suspended with a bias flux through electromagnetic rotor and drive magnet rotor. Also, the pump design incorporating the double volute can reduce hydraulic force imbalance inside the pump housing, stabilizing the radial movement. The pump speed is controlled from 1200 to 2600 rpm and can produce a flow rate of 2–10 L/min. A chronic animal study in sheep for a duration of 864 and 482 days demonstrated the reliability and stability of the maglev system.

The clinical implant of the DuraHeart left ventricular assist system (LVAS) was started in January 2004 in Bad Oeynhausen, Germany. To date, a total of 20 implants have been completed (17 male, 3 female) at four heart centers in Europe. The mean age was 52 ± 12.5 years (range: 29–72 years, median: 55.5 years) with a mean BSA of 1.9 ± 0.18 m^2 (1.4–2.3 m^2). As of August 2005, the mean support duration was 130 ± 131.0 days (range: 17–497 days). Eight patients (40%) were transplanted at 196 ± 138.3 days and the remaining six patients (30%) were under support. Thirteen patients were discharged home (80% survived 30 days post implant) and 10 patients (50%) met primary end points, while four were pending. There were six deaths (30%) between 17 and 86 days of support. The pump flow rate and pump flow index averaged 4.94 ± 0.36 L/min and 2.60 ± 0.21 L/min/m^2, respectively, at the mean motor speed of 1597 ± 57.5 rpm. Plasma-free hemoglobin averaged 7.35 mg/dL.

At the Bad Oeynhausen Heart Center, seven patients (six male and one female; mean age: 54 years) were discharged home for 1–360 days. Three patients were hospitalized again due to (i) maglev system problem, (ii) drive line infection, and (iii) severe right-heart failure, respectively. All problems could be resolved with conventional therapy. Currently, DuraHeart is pending for Conformité Européenne (CE) mark approval.

Berlin Heart INCOR axial pump: direct-drive system (28–30)

The Berlin Heart INCOR axial pump is an example of the direct-drive mechanism with axial levitation. The system block diagram is shown in Fig. 3. Axial impeller movement is monitored by a position sensor and controlled actively by the two electromagnets mounted at both ends of the rotor. Radial and tilting impeller movements are passively controlled. Levitated impeller can be rotated at speeds between 5000 and 10 000 rpm generating up to 5 L/min of flow against a pressure of 100 mm Hg with a maglev power consumption of 2–4 W. The motor efficiency of more than 90% and power consumption <4 W ensure that the pump does not generate any significant amount of heat. The control software enables monitoring of the pressure gradient and the flow by detection of the rotor's position in the magnetic field. An antisuction algorithm can be activated to eliminate suction of ventricular structures. The pump, which is made of titanium, weighs 200 g, has an axial direction of 120 mm, an outer diameter of 30 mm, and a volume of 80 mL. The pump is controlled through a percutaneous cable connected to the control unit and a main as well as a backup battery. The flow straighter and diffuser are adapted for inflow and outflow passage, respectively, to reduce the spin of blood flow and add to the pressure buildup. All blood-contacting surfaces are heparin coated by the Carmeda process.

The first human clinical trial was started on June 16, 2002, at the German Heart Institute, Berlin, Germany. Since then, the Berlin Heart INCOR axial pump has been used in 212 cases worldwide. The mean patient age was 51.5 ± 13 years (range: 16–72 years), and 24 patients (11.3%) were female. Indications were ischemic cardiomyopathy, 88 cases

15251594, 2006, 5, Downloaded from https://onlinelibrary.wiley.com/doi/10.1111/j.1525-1594.2006.00222.x by University Of California - Davis, Wiley Online Library on [18/02/2025]. See the Terms and Conditions (https://onlinelibrary.wiley.com/terms-and-conditions) on Wiley Online Library for rules of use; OA articles are governed by the applicable Creative Commons License

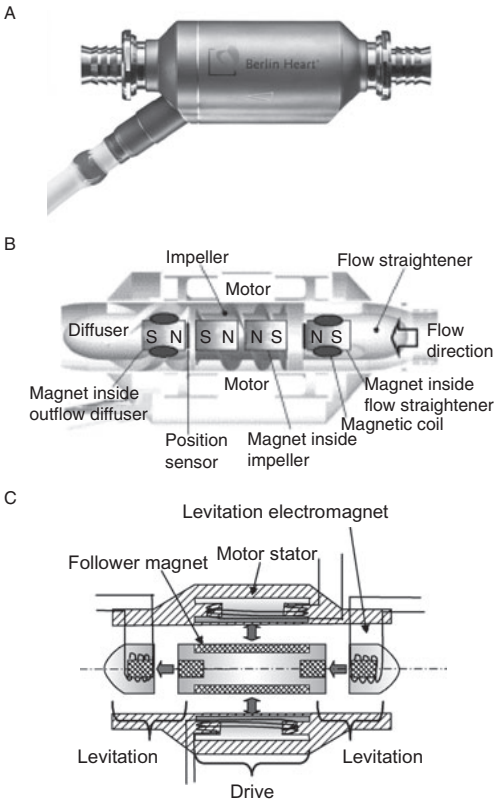

FIG. 3. (A) Berlin Heart INCOR axial maglev axial flow pump; (B) schematic representation of its structure; and (C) levitation and drive system schematic.

(42%); dilative cardiomyopathy, 86 cases (41%); acute infarction, 19 cases (9%); acute myocarditis, 9 cases (4%); and others, 10 cases (5%). The mean support time on device was 162 ± 182 days (maximum: 1071 days). Sixty-five (31%) patients were transplanted, 11 (5%) were explanted (weaned from the system), 43 (20%) are currently on the system, and 93 (44%) patients died on the system. The major cause of death was multi-organ failure in 47 (22%) cases followed by cerebrovascular events in 17 cases. Other causes of death were right ventricular failure, five cases (2%); trauma, two cases (1%); cancer, three cases (1%); and others or unknown, 20 cases (9%). Fifty-one patients (21%) were discharged home on the device. Blood chemistry analysis revealed no trauma of the blood cells, and no hemolysis could be detected (lactic dehydrogenase and haptoglobin within normal ranges). There were no deaths related to device failure.

Levitronix CentriMag extracorporeal maglev pump: self-bearing system (31–35)

The CentriMag manufactured by Levitronix as the extracorporeal magnetically levitated CRBP (maglev CRBP) system, using what is called bearingless motor or self-bearing motor, may be a solution to such a problem by eliminating mechanical contact bearings. In the CentriMag, the rotor is suspended and rotated by eight L-shaped iron cores (four pairs) with drive and control winding together. The rotor position and rotation are continuously controlled by feedback control system in radial directions by two DOF as shown in Fig. 4. Another impeller motion is passively suspended with bias flux between rotor and stator.

The pump system consists of a single-use disposable polycarbonate pump head (priming volume: 31 mL, connectors: 0.375-in. inlet/outlet ports), motor/bearing drive unit (diameter × height = 87 × 70 mm), cannulas, and a bedside controller. It can deliver a pump flow of up to 9.9 L/min, head pressures of up to 600 mm Hg operated at a rotational speed of up to 5500 rpm. The pump was specially designed for extracorporeal circulatory support applications as cardiopulmonary bypass or uni- or biventricular assistance. The hemolysis rate of this pump is about half that of the BioMedicus BP-80 (Medtronic, Minneapolis, MN, U.S.A.). The device is CE mark approved for short-term usage for up to 14 days in cardiogenic shock patients.

Between July 2003 and March 2005, over 150 patients worldwide were supported with the CentriMag. The main indications for support were

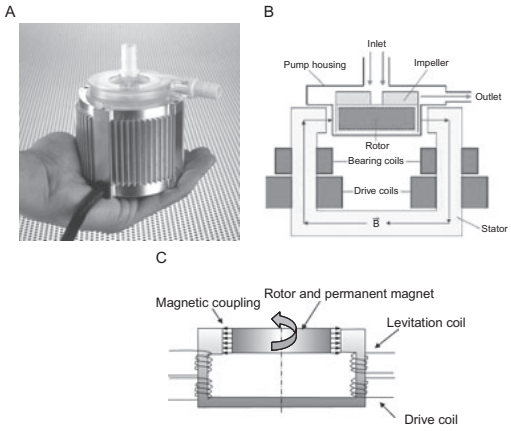

FIG. 4. (A) Levitronix CentriMag maglev centrifugal blood pump; (B) schematic representation of its structure; and (C) levitation and drive system schematic.

15251594, 2006, 5, Downloaded from https://onlinelibrary.wiley.com/doi/10.1111/j.1525-1594.2006.00222.x by University Of California - Davis, Wiley Online Library on [18/02/2025]. See the Terms and Conditions (https://onlinelibrary.wiley.com/terms-and-conditions) on Wiley Online Library for rules of use; OA articles are governed by the applicable Creative Commons License

Abbott v. Miracor, IPR2025-00115
Abbott Ex. 1046, p. 5 of 15

postcardiotomy failure (38%), acute myocardial infarction (21%), graft failure after transplantation (12%), and adult respiratory distress syndrome (4%). Seventy-six patients (50%) were successfully recovered, 10 patients were bridged to long-term left ventricular assist device, and three patients (7%) were successfully bridged to transplantation. All cases exhibited low hemolysis, and termination of support has always been elective. No technical problems occurred with the maglev system during the observation period. The ratio of successful weaning was better than first- and second-generation extra-/para-corporeal mechanical support systems in acute carcinogenic shock. This system achieved "bridge-to-bridge support" for (i) recovery, (ii) heart transplantation, and (iii) more advanced chronic mechanical support, which gives moratorium of decision situations for patients and clinicians to choose better and cost-effective treatment.

FUTURE MAGLEV SYSTEMS

Thoratec HeartMate III: radial self-bearing system (36–40)

The HeartMate III, as shown in Fig. 5, is a totally implantable uni-/biventricular assist system (VAS). The pump casing, vent port, and inflow cannula are made of titanium alloy. The textured surface adapted for blood-contacting surfaces of the pump housing can reduce the risk of thromboembolism. The rotor is fabricated with smooth, polished surfaces. External pump head size and weight are approximately 69 mm in diameter, 35 mm in height, and 475 g in weight (535 g, including the inflow cannula, recovery section, outflow graft, bend relief, and all connecting hardware). The maglev mechanism is the same as that of the CentriMag system, but the pump and actuator size were reduced as an implantable system. A flow rate of 7 L/min was obtained at 135 mm Hg of head pressure with 8 W of power consumption. At a rotational speed of 2000–5500 rpm, 10 L/min pump output can be produced under the left ventricular assist condition. The percutaneous version of the HeartMate demonstrated up to 120 days survival in animal tests. Mean plasma-free hemoglobin was 5.1–7.8 mg/dL in six in vivo studies.

WorldHeart HeartQuest: self-bearing system (41–46)

The HeartQuest VAD (Fig. 6) next-generation rotary pump uses a centrifugal pump, with a bearingless, magnetically levitated impeller. HeartQuest has a single-axis active control levitation system. The levitated impeller rotated with a direct-drive actuator-eliminated mechanical friction parts. The clinical system has been finalized, and animal tests have been

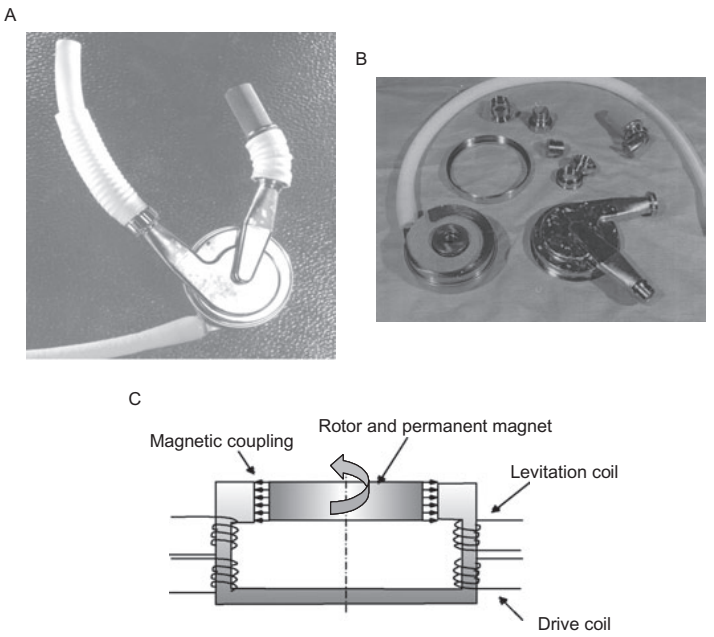

FIG. 5. (A) Thoratec HeartMate III maglev centrifugal blood pump; (B) its components layout; and (C) levitation and drive system schematic.

15251594, 2006, 5, Downloaded from https://onlinelibrary.wiley.com/doi/10.1111/j.1525-1594.2006.00222.x by University Of California - Davis, Wiley Online Library on [18/02/2025]. See the Terms and Conditions (https://onlinelibrary.wiley.com/terms-and-conditions) on Wiley Online Library for rules of use; OA articles are governed by the applicable Creative Commons License

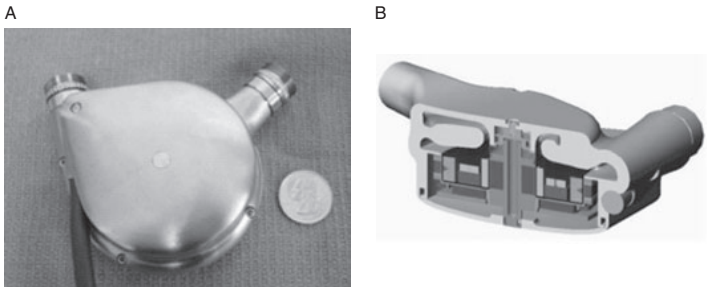

FIG. 6. (A) WorldHeart HeartQuest maglev centrifugal blood pump; and (B) its structure.

performed in calves. WorldHeart was recently notified by the Ethics Committee of St. Luke's Hospital in Thessaloniki, Greece, of approval to proceed with the clinical feasibility study of its rotary VAD. The clinical evaluation is expected to begin in early 2006, pending completion of preclinical testing and acceptance of the clinical investigation application by the Greek Ministry of Health.

The PediaFlow pediatric VAD (WorldHeart) is currently being developed as an implantable and magnetically suspended mixed-flow pump supported by the National Institute of Health (NIH). Design requirements include a support duration of 6 months, a flow rate of 0.3–1.5 L/min, and a body weight of 3–15 kg. This pump utilizes a similar maglev system to achieve mechanical contactless operation.

Ibaraki University maglev blood pumps (47–49)

Ibaraki University has been developing three types (two centrifugal and one axial flow) of maglev systems, and completely eliminated the mechanical friction parts by the self-bearing system or direct-drive system.

In the direct-drive centrifugal maglev pump (Fig. 7), the impeller is set between the active magnetic bearing and the motor stator. The active magnetic bearing uses four electromagnets to control the tilt and the axial position of the impeller (three DOF). The radial movement of the levitated impeller is restricted with the passive stability dependent upon the top stator and the passive permanent magnetic bearing to reduce the energy consumption and the control system complexity. The levitated impeller was rotated with bottom stator. This system is 56 mm in height, 95 mm in diameter, and an impeller diameter of 60 mm. The maximum head pressure and the maximum flow rate were 200 mm Hg and 10.5 L/min, respectively, at the rotational speed of 2000 rpm.

The inner stator type self-bearing maglev system was developed for the CRBP system. The impeller was suspended with self-bearing maglev system for radial directions. This system was similar to that of outer stator type CentriMag or HeartMate maglev systems. The inner stator can use a larger impeller and reduce the rotational speed than the outer stator type. The impeller has six vanes and an outer diameter of 63 mm. Power consumption for levitation and radial displacement of the impeller with a rotational speed of 1500 rpm were 0.7 W and 0.04 mm, respectively, in the double volute, while those in the single volute were 1.3 W and 0.07 mm, respectively. The maximum flow rate and the pressure head were 9 L/min and 250 mm Hg, respectively. The impeller can be rotated up to 2200 rpm. At the double-volute design, the total efficiency was 11% at the flow rate of 5 L/min against a head pressure of 100 mm Hg.

An axial self-bearing motor is proposed which can drive an axial blood pump without physical contact. The impeller was suspended with upper and lower self-bearing stators. Only axial motion is actively controlled (one DOF) and rotates the impeller concurrently. This system has a diameter of 62 mm and an axial length of 107.7 mm. The pump test recorded a maximum head pressure of 50 mm Hg and a maximum flow rate of 2.8 L/min at the rotational speed of 4000 rpm.

Gold Medical Technologies MagneVAD (50,51)

The MagneVAD I (Fig. 8) is an ultrasmall magnetically levitated axial pump system with a volume of only 25 mL and weight of 82 g. Magnetic flux was produced between inlet side electromagnet stator and impeller. The impeller position was monitored with ultrasonic position sensor in axial direction (one DOF). Other impeller movements were passively suspended by magnetic flux. Typical pump specifications are 6 L/min at 100 mm Hg and 12 500 rpm. The motor power consumption is typically 5 W and the magnetic suspension system consumes 0.33 W using

15251594, 2006, 5, Downloaded from https://onlinelibrary.wiley.com/doi/10.1111/j.1525-1594.2006.00222.x by University Of California - Davis, Wiley Online Library on [18/02/2025]. See the Terms and Conditions (https://onlinelibrary.wiley.com/terms-and-conditions) on Wiley Online Library for rules of use; OA articles are governed by the applicable Creative Commons License

Abbott v. Miracor, IPR2025-00115
Abbott Ex. 1046, p. 7 of 15

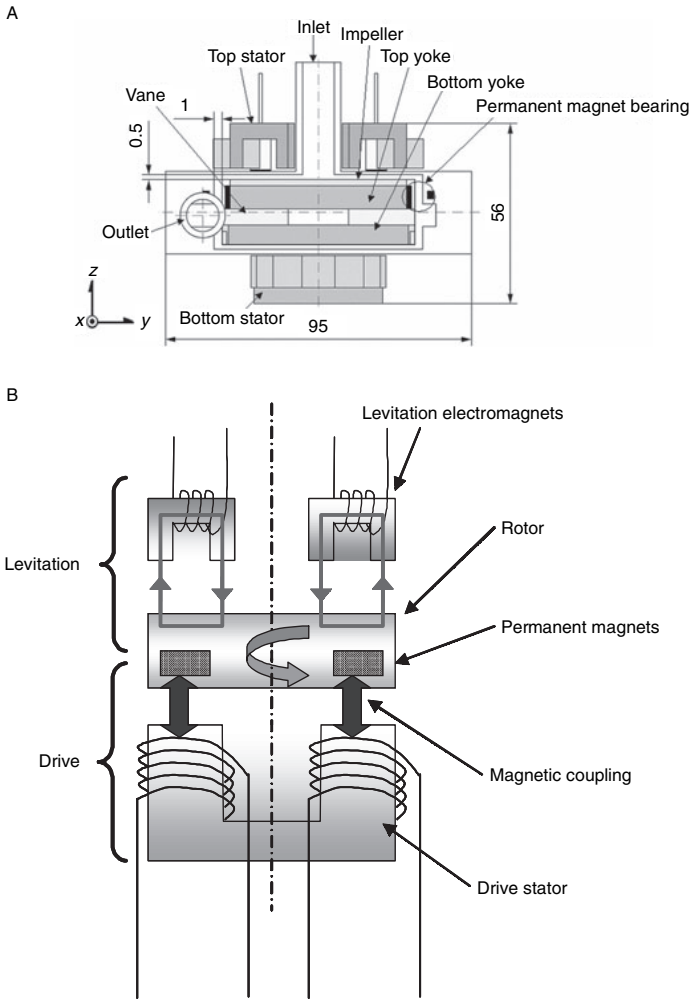

FIG. 7. (A) Ibaraki University (Mito, Japan) maglev centrifugal blood pump schematic; and (B) levitation and drive system schematic.

virtually zero power control. Washout hole was in rotor to produce secondary flow for better antithrombogenecity. An outlet diffuser reduces the flow separation and obtains better washout in the outlet line junction. The rotor location shifts in response to differential pressure. A low-cost position sensor measures this motion to provide pump differential pressure.

The MagneVAD II is an improved version of the MagneVAD I with all passive bearing systems using hydrodynamic and permanent magnets bearing, but otherwise (overview, impeller, motor, diffuser) similar. A self-washing radial hydrodynamic bearing suspends the rotor.

Mohawk hybrid magnetic bearing: MiTiHeart (MiTi Heart) (52,53)

The MiTiHeart (Fig. 9) design uses a hybrid passive/active magnetic bearing system such that only one actively controlled axis is required. A reduction in the number of actively controlled axes reduces the power required to operate the bearings, thus increasing the operating time before a battery change or recharge is required. The MiTiHeart has a diameter of 50 mm, is 80 mm in length, and weighs 300 g. Flow rates of 2–7 L/min and pressure rises of 50–150 mm Hg were measured. Pump speeds were varied during these tests, ranging from 2500 to 3500 rpm. The nominal design flow of 5 L/min at 100 mm Hg

15251594, 2006, 5, Downloaded from https://onlinelibrary.wiley.com/doi/10.1111/j.1525-1594.2006.00222.x by University Of California - Davis, Wiley Online Library on [18/02/2025]. See the Terms and Conditions (https://onlinelibrary.wiley.com/terms-and-conditions) on Wiley Online Library for rules of use; OA articles are governed by the applicable Creative Commons License

Abbott v. Miracor, IPR2025-00115
Abbott Ex. 1046, p. 8 of 15

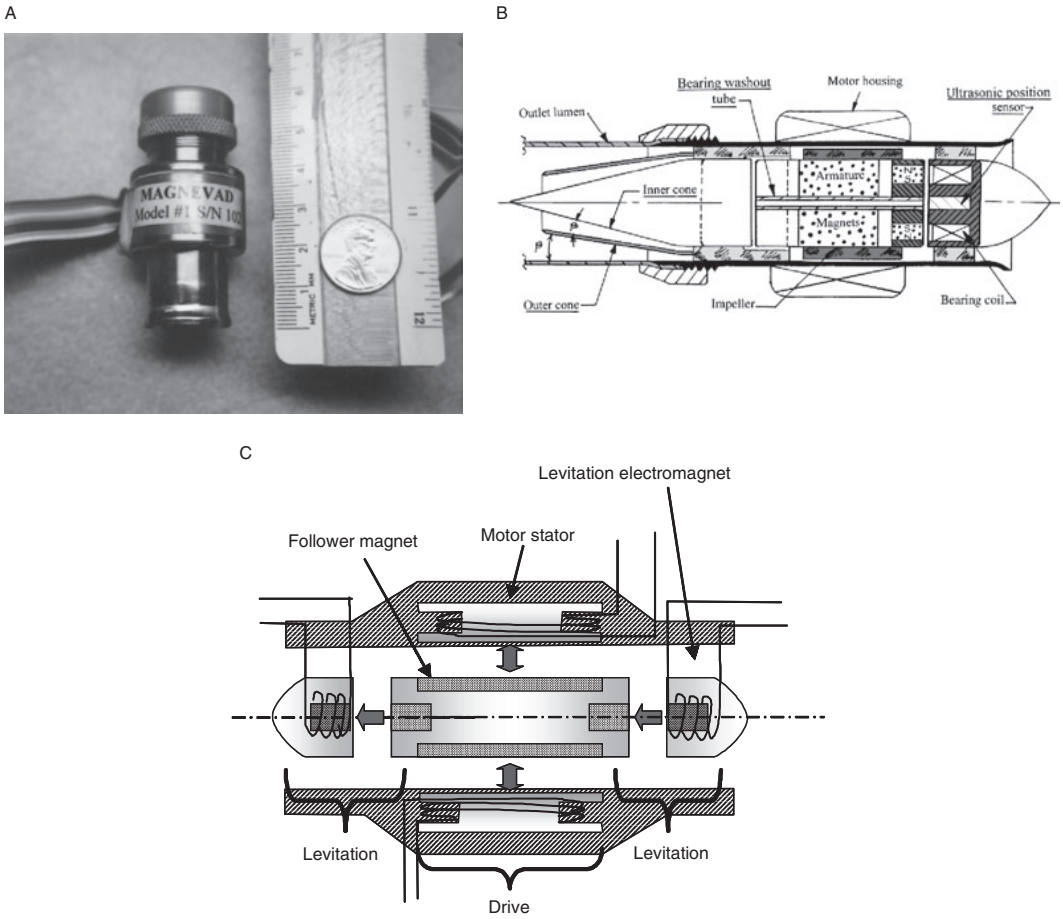

FIG. 8. (A) Gold Medical Technologies MagneVAD; (B) schematic diagram of its structure; and (C) levitation and drive system schematic.

pressure rise was successfully achieved at the design speed of 3000 rpm. Power consumptions of the maglev system and motor were <0.5 and 6 W. The hemolysis rate was NIH <0.01 g/100 L.

TMDU/TIT external motor system with radial levitation (54–58)

In this maglev system, the impeller is suspended with two pairs of electromagnets in two DOF controlling in *x*- and *y*-directions. Strong magnetic bias flux was also produced between the rotor and the magnetized steel in the outer pump housing to passively control the movement of the impeller in the *z*-axis and rotational axes. This system has high passive stiffness of 15.9–17.0 N/mm in *z*-direction and 3.4–4.4 Nm/rad in tilt directions. This levitation system was used to implement (i) an extracorporeal disposable centrifugal blood pump system and (ii) an implantable LVAS (ILVAS). Each blood pump system is discussed now.

Extracorporeal disposable centrifugal blood pump system

A disposable pump system consists of a pump head with an easy detach-and-insert feature and an actuator unit (Fig. 10). The radial magnetic coupling force induced from the driver magnet mounted on the external motor shaft and placed inside the doughnut-shaped impeller rotated the impeller. A flow rate of 5 L/min at a head pressure of 100 mm Hg was

15251594, 2006, 5, Downloaded from https://onlinelibrary.wiley.com/doi/10.1111/j.1525-1594.2006.00222.x by University Of California - Davis, Wiley Online Library on [18/02/2025]. See the Terms and Conditions (https://onlinelibrary.wiley.com/terms-and-conditions) on Wiley Online Library for rules of use; OA articles are governed by the applicable Creative Commons License

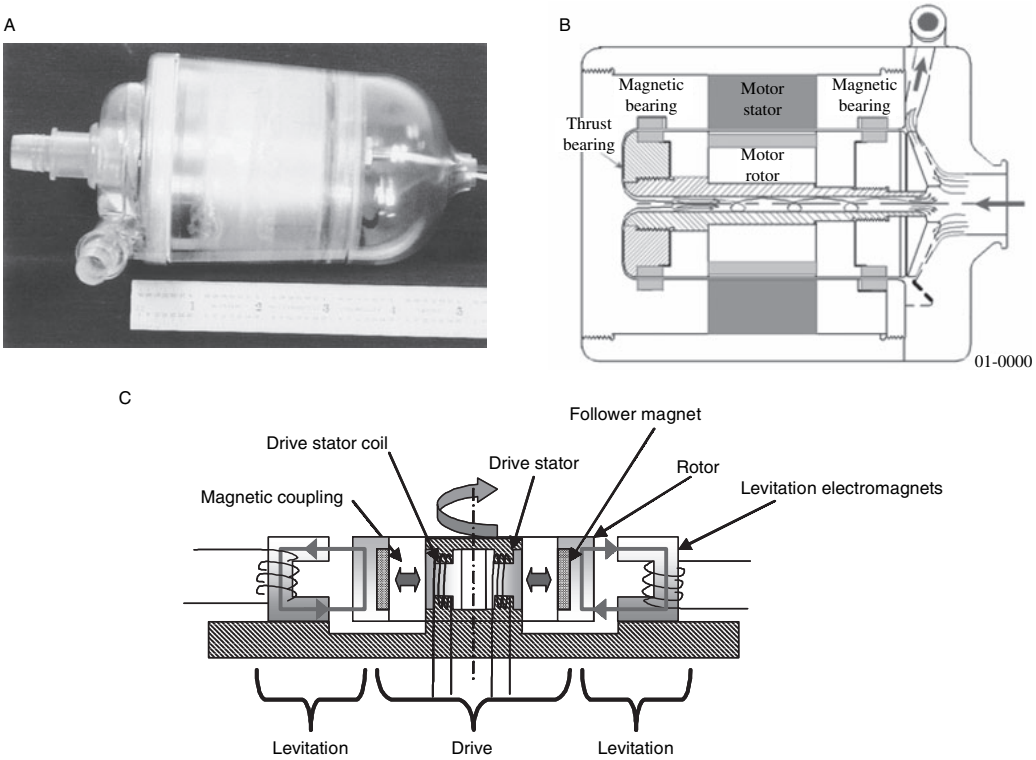

FIG. 9. (A) Mohawk hybrid bearing MiTiHeart (MiTi Heart); (B) schematic diagram of the pump structure; and (C) levitation and drive system schematic.

obtained at the rotational speed of around 1800 rpm. The power consumption of the magnetic bearing was <0.7 W at the rotational speed of 1400–2400 rpm. Maybe because of mechanical noncontact feature, the mechanical damage to blood cell elements measured as an NIH was <0.001 g/100 L, one-fifth of the BioMedicus BP-80 and one-half of Nikkiso (Tokyo, Japan) HPM-15. In the simulated mock loop testing with a pulsating ventricle, it was shown that the impeller stability was affected by the ventricular pulsation, indicating that from the level of impeller movement the ejection strength of the ventricle could be diagnosed. This system is intended as 1-month bridge-to-bridge extracorporeal heart assist device bridging to various options including the implantable VAS, heart transplantation, medical treatment, and other advanced therapies.

ILVAS

To reduce the overall pump height and make it acceptable as an implantable system, a direct-drive stator was installed inside the doughnut-shaped impeller (inner stator drive) by eliminating the external motor of the disposable system (Fig. 11). The ring-shaped permanent magnets embedded inside the doughnut-shaped impeller became the direct-drive motor rotor. The overall dimensions of the maglev implantable pump are 65 mm in diameter and 40 mm in height and a smaller system (diameter × height = 65 × 32.5 mm) than HeartMate III is under development. A flow rate of 6 L/min at a head pressure of 105 mm Hg was obtained at around 1800 rpm. The maglev and motor power consumption were 1.5 and 5 W, respectively, and efficiency was 21%. An impeller stability of <20 μm was demonstrated as the pump was connected to the simulated left ventricular apex in the mock circulatory loop and under 8 *g* of acceleration testing. The impeller remained levitated; it neither made any contact with the pump housing nor did it touch down. NIH was 0.002 g/100 L, one-half of the BioMedicus BPX-80.

15251594, 2006, 5, Downloaded from https://onlinelibrary.wiley.com/doi/10.1111/j.1525-1594.2006.00222.x by University Of California - Davis, Wiley Online Library on [18/02/2025]. See the Terms and Conditions (https://onlinelibrary.wiley.com/terms-and-conditions) on Wiley Online Library for rules of use; OA articles are governed by the applicable Creative Commons License

Abbott v. Miracor, IPR2025-00115
Abbott Ex. 1046, p. 10 of 15

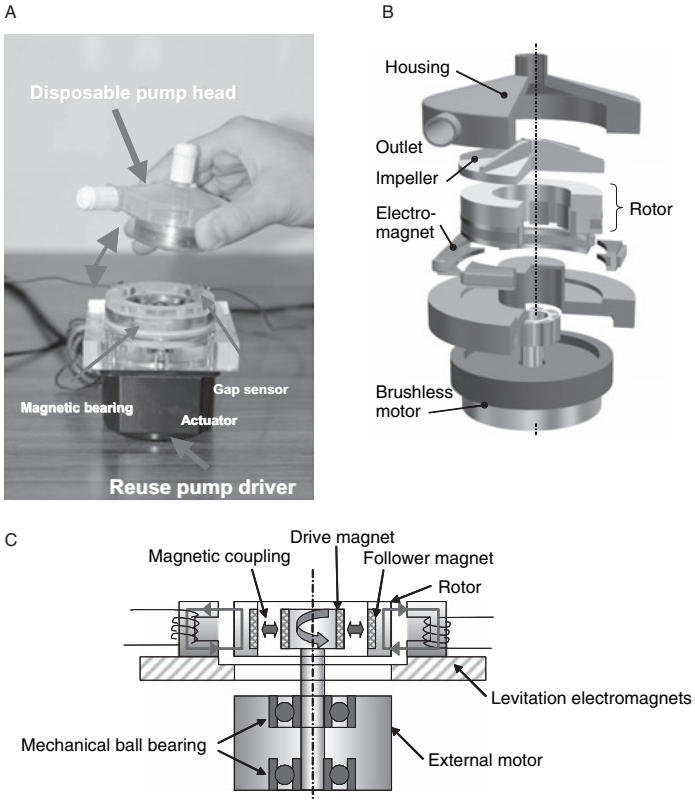

FIG. 10. (A) TMDU/TIT maglev extracorporeal centrifugal blood pump; (B) schematic diagram of its structure; and (C) levitation and drive system schematic.

DISCUSSION AND FUTURE DIRECTIONS

Table 1 summarizes the features of the maglev systems presented in this review. There are a dozen maglev centrifugal or axial blood pumps now under development or in clinical trials. The maglev system requires a rotor, position sensors, electromagnets, and an instrument control system. The maglev system also requires an active control theory. The early-stage maglev rotary blood pump system was larger and more complex than the second-generation rotary blood pump system because of the weakness in the electromagnetic force per area. We thought many control axes were required to obtain stable and reliable mechanical noncontact operation. With the progress in understanding and technology, fewer axes are now required such as the Berlin Heart INCOR, the Gold Medical Technologies MagneVAD, the MedQuest HeartQuest, and MiTi Heart's MiTiHeart where only one-axis control is used to obtain a stable operation. Among them, INCOR has been successful in clinical applications in several hundred patients. Although requiring two DOF, the extracorporeal Levitronix CentriMag has appeared more recently to extend the continuous usage of the extracorporeal blood pumps longer than 24–48 h.

The factors of improvement include (i) design of suspension mechanism and testing (structure and magnetic field with computer-aided design [CAD]/finite element method [FEM] analysis); (ii) combination of magnetic and hydraulic bearings; (iii) control theory; and (iv) durability and stability of sensors and instruments. As for the design of the suspension mechanism, CAD/computer-aided manufacturing/FEM can be fully utilized to simulate conditions that are difficult to speculate and to minimize the development time and effort. Levitation control stability and robust performances should be evaluated as a blood pump system in the simulated actual environment rather than a levitation system alone. A better understanding of rotor dynamics together with pump

15251594, 2006, 5, Downloaded from https://onlinelibrary.wiley.com/doi/10.1111/j.1525-1594.2006.00222.x by University Of California - Davis, Wiley Online Library on [18/02/2025]. See the Terms and Conditions (https://onlinelibrary.wiley.com/terms-and-conditions) on Wiley Online Library for rules of use; OA articles are governed by the applicable Creative Commons License

Abbott v. Miracor, IPR2025-00115
Abbott Ex. 1046, p. 11 of 15

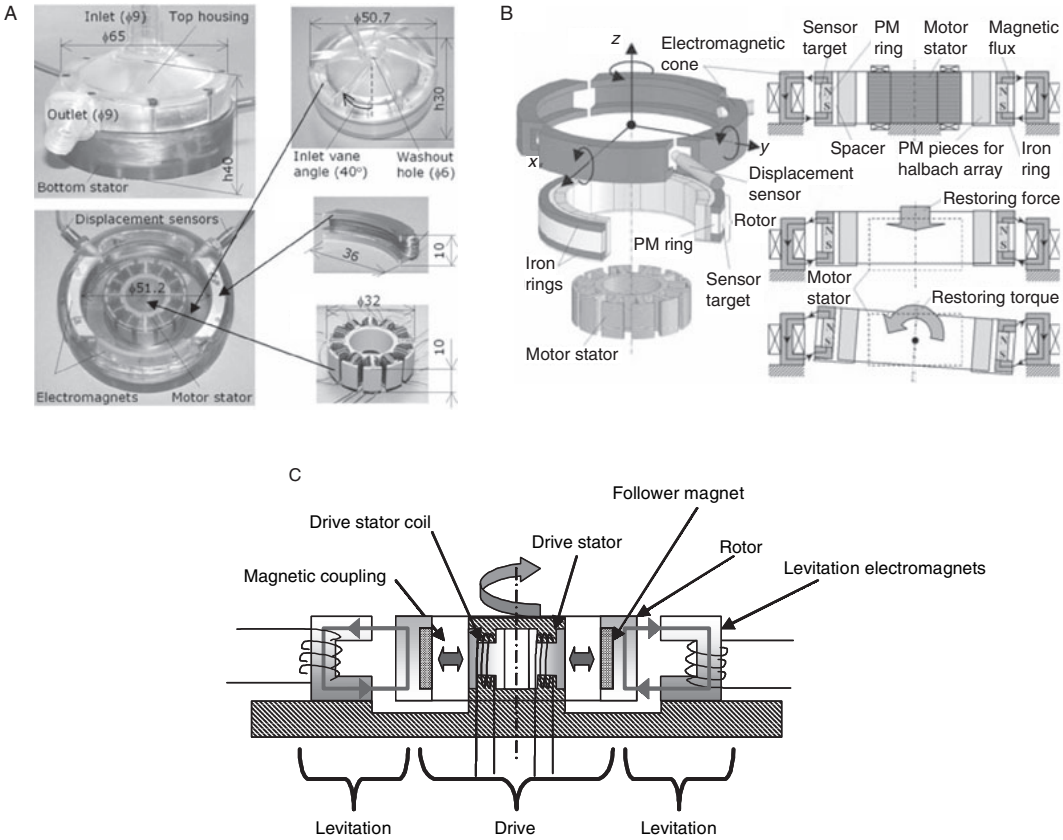

FIG. 11. (A) TMDU/TIT maglev implantable centrifugal blood pump; (B) schematic diagram of the structure; and (C) levitation and drive system schematic.

design should help improve the levitation mechanism and its theory. Because all these devices will be used in the pulsatile environment receiving fairly high impact from the native heart, its control stability must be assured in the simulated pulsatile mock loop and in vivo animal studies.

As for the number of control axis, according to the theory of Earnshaw (59), zero-axis levitation with the permanent magnet alone is not possible. At least one-axis control is required to obtain a stable performance. From this point of view, the INCOR system may be closest to the ideal system. To compensate for the shortcomings by reducing the number of axes involved in the control, a combination of the active and passive mechanisms such as hydraulic levitation might be a solution. In the DuraHeart system, a hydraulic bearing is incorporated in the pump bottom housing to help stabilize an axial offset so that in the case of maglev failure, it can ascertain noncontact operation as a backup system.

Durability and stability of the sensors and control system are another problem in the maglev system. Because all the equipment are operated in the biological environment with a body temperature of 37°C and with high humidity, electronic performance and sealing of body fluid entering the package sometimes shorten the life span of the devices. When the number of control axes increases, the probability of failure increases. A simpler MagLev system was required for making a long-life device.

In closing, as demonstrated by the achievement of the Jarvik 2000 blood pump, the blood-immersed bearings work in humans for a duration longer than 5 years. Although it is required to produce more success stories, it is concrete evidence that the blood-immersed bearings work for 5 years or longer

15251594, 2006, 5, Downloaded from https://onlinelibrary.wiley.com/doi/10.1111/j.1525-1594.2006.00222.x by University Of California - Davis, Wiley Online Library on [18/02/2025]. See the Terms and Conditions (https://onlinelibrary.wiley.com/terms-and-conditions) on Wiley Online Library for rules of use; OA articles are governed by the applicable Creative Commons License

Abbott v. Miracor, IPR2025-00115
Abbott Ex. 1046, p. 12 of 15

TABLE 1. *Summary of clinical and experimental maglev rotary blood pumps*

	Team or pump	Pump type	Support type	DOF, Control direction	Size	Power or efficiency for LV assist	Hemolysis	Stage
External motor drive	TMDU/TIT	Centrifugal	Ex uni-/bi- VAS, ECMO, PCPS	2 DOF, radial	—	0.7 W (maglev) 5 W (motor)	0.001 g/100 L one-fifth of BP-80	In vitro test
	DuraHeart	Centrifugal	ILVAS	3 DOF, axial	72*, 45†, 180‡, 540§	8–10 W (total) at in vivo	0.003 g/100 L 0.01–0.03 g/100 L at 10 L/min, 150 mm Hg	Clinical trial
Direct drive	CentriMag	Centrifugal	Ex uni-/bi-VAS	2 DOF, radial	87*, 70†		One-half of BP-80	Clinical use
	Berlin Heart INCOR	Axial	ILVAS	1 DOF, axial	30*, 120†, 80‡, 200§	2–4 W (maglev) 4 W (motor)	0.003 g/100 L	Clinical trial
	MagneVAD	Axial	ILVAS	1 DOF, axial	25‡, 82§	5 W	0.001–0.002 g/100 L	Animal test
	MedQuest/ HeartQuest	Centrifugal	ILVAS	1 DOF, axial	75*, 35†	12 W	Acceptable at in vivo	Animal test
	PediaFlow	Centrifugal	IBiVAS or ILVAS for children	1 DOF, axial	38*, 21†, 40§	—	—	In vitro test
	MiTiHeart	Centrifugal	ILVAS	1 DOF, radial	50*, 80†, 300§	<0.5 W (maglev) <6 W (total)	0.01 g/100 L	Animal test
	Ibaraki University	(i) Centrifugal (ii) Centrifugal (iii) Axial	ILVAS	(i) 3 DOF, axial (ii) 2 DOF, radial (iii) 3 DOF, axial	(i) 95*, 56† (ii) —— (iii) 62*, 107.7†	(i) 8 W (ii) 0.7 W (maglev), 11% (iii) ——	—	In vitro test
	TMDU/TIT	Centrifugal	ILVAS	2 DOF, radial	65*, 40†	1.5 W (maglev) 5 W (motor), 21%	0.002 g/100 L one-half of BPX-80	In vitro test
	HeartMate III	Centrifugal	Total ILVAS	2 DOF, radial	69*, 35†, 475§	8 W, 27% at 7 L/min,135 mm Hg	Acceptable at in vivo	Animal test

*Diameter (mm).
†Height (mm).
‡Volume (mL).
§Weight (g).
LV, left ventricular; ECMO, extracorporeal membrane oxygenation; PCPS, percutaneous cardiopulmonary support; IBiVAS, implantable biventricular assist system.

Abbott v. Miracor, IPR2025-00115
Abbott Ex. 1046, p. 13 of 15

15251594, 2006, 5, Downloaded from https://onlinelibrary.wiley.com/doi/10.1111/j.1525-1594.2006.00222.x by University Of California - Davis, Wiley Online Library on [18/02/2025]. See the Terms and Conditions (https://onlinelibrary.wiley.com/terms-and-conditions) on Wiley Online Library for rules of use; OA articles are governed by the applicable Creative Commons License

as proposed. The sophisticated and expensive levitation mechanism is not required in the second-generation contact bearing blood pumps. Also, second-generation pumps can be reduced in size compared with third-generation devices. So, do we not need third-generation maglev systems? To answer this question, we should keep an eye on the clinical outcomes of second-generation blood pumps in the future. What is best for the patients is the best for everyone. We should not waste efforts unless they are actually needed to improve the quality of life of patients.

REFERENCES

1. Noon GP. The MicroMed DeBakey VAD United States clinical experience. *Artif Organs* 2006;30:A13.
2. Westaby S. The Jarvik 2000 axial flow pump. *Artif Organs* 2006;30:A12.
3. Butler K, Farar D, Heatley J. Continued development of the HeartMate II LVAD. *Artif Organs* 2006;30:A13.
4. Westaby S, Banning AP, Jarvik R, et al. First permanent implant of the Jarvik 2000 heart *Lancet* 2000;356:900–3.
5. El-Banayosy A, Arusoglu L, Morshuis M, et al. Initial out-of-hospital experience with the DuraHeart. *Artif Organs* 2006; 30:A1.
6. Mueller J, Nuesser P, Graichen H, et al. Three years of experience with the magnetically levitated axial flow pump INCOR. *Artif Organs* 2006;30:A13.
7. Woodard J. VentrAssist program status. *Artif Organs* 2006; 30:A13.
8. Golding L, Massiello A, Horvath D. The CorAide automatic control mode—initial clinical experience. *Artif Organs* 2006; 30:A13.
9. Golding LR, Jacobs G, Murakami T, et al. Chronic nonpulsatile blood flow in an alive, awake animal 34-day survival. *Trans Am Soc Artif Intern Organs* 1980;26:251–5.
10. Takatani S, Ozawa K, Golding L, et al. Comparative evaluation of nonpulsatile and pulsatile cardiac prostheses. *Trans Am Soc Artif Intern Organs* 1980;26:438–43.
11. Golding LR, Murakami G, Harasaki H, et al. Chronic nonpulsatile blood flow. *Trans Am Soc Artif Intern Organs* 1982; 28:81–5.
12. Takatani S. Beyond implantable first generation cardiac prostheses for treatment of end-stage cardiac patients with clinical results in a multicenter. *Ann Thorac Cardiovasc Surg* 2002;8:253–63.
13. Beams JW. Magnetic suspension for small rotors. *Rev Sci Inst* 1950;21:182–4.
14. Akamatsu T, Nakazeki T, Itoh H. Centrifugal blood pump with a magnetically suspended impeller. *Artif Organs* 1992; 16:305–8.
15. Akamatsu T, Tsukiya T, Nishimura K, Park CH, Nakazeki T. Recent studies of the centrifugal blood pump with a magnetically suspended impeller. *Artif Organs* 1995;19:631–4.
16. Allaire PE, Kim HC, Maslen EH, Olsen DB, Bearnson GB. Prototype continuous flow ventricular assist device supported on magnetic bearings. *Artif Organs* 1996;20:582–90.
17. Chiba A, Fukao T, Rahman MA. An Analysis of Bearingless AC motors. *IEEE Transaction on Energy Conversion* 1994;9(1);61–68.
18. Bichsel J. Contributions on bearingless electric motors. *ETH Thesis NO.9303,* 1990.
19. Schöb R, Barletta N. Principle and application of a bearingless slice motor. *JSME International journal series C* 1997;40:593–8.
20. Nojiri C, Kijima T, Maekawa J, et al. More than one year continuous operation of a centrifugal pump with a magnetically suspended impeller. *ASAIO J* 1997;43:M548–52.
21. Nojiri C, Kijima T, Maekawa J, et al. Recent progress in the development of Terumo implantable LVAS (TILVAS). *ASAIO J* 1999;45:199–203.
22. Nishimura K, Kono S, Nishina S, et al. Results of animal experiments with a new version of a magnetically suspended centrifugal pump. *ASAIO J* 1998;44:M725–7.
23. Nojiri C, Kijima T, Maekawa J, et al. Recent progress in the development of Terumo implantable LVAS (TILVAS). *ASAIO J* 1999;45:199–203.
24. Nojiri C, Kijima T, Maekawa J, et al. Terumo implantable left ventricular assist system (TILVAS): results of long-term animal study. *ASAIO J* 2000;46:117–22.
25. Saito S, Westaby S, Piggot D, et al. Reliable long-term non-pulsatile circulatory support without anticoagulation. *Eur J Cardiothorac Surg* 2001;19:678–83.
26. Terumo Corporation. Available at: http://www.terumo.co.jp/index.html. Accessed February 10, 2006.
27. El-Banayosy A, Koerfer R, Hetzer R, Wieselthaler G, Pavie A. Initial results of a European multicenter clinical trial with the DuraHeart Mag-Lev centrifugal left ventricular assist device. *J Heart Lung Transplant* 2006;25(Suppl. 1):145.
28. Hetzer R, Weng Y, Potapov EV, et al. First experiences with a novel magnetically suspended axial flow left ventricular assist device. *Eur J Cardiothorac Surg* 2004;25:964–70.
29. Schmid C, Tjan TD, Etz C, et al. First clinical experience with the INCOR left ventricular assist device. *J Heart Lung Transplant* 2005;24:1188–94.
30. Huber CH, Tozzi P, Hurni M, von Segesser LK. No drive line, no seal, no bearing and no wear: magnetics for impeller suspension and flow assessment in a new VAD. *Interact Cardiovasc Thorac Surg* 2004;3:336–40.
31. Schöb R. Centrifugal pump without bearings or seals. *World Pumps* 2002;430:34–7.
32. Schoeb R, Barletta N, Fleischli A, Foiera G, Gempp T, Reiter H-G, Poirier VL, Gernes DB, Bourque K, Loree HM, Richardson JS. A bearingless motor for a left ventricular assist device (LVAD). *7th ISMB.* 7th international symposium on magnetic bearings. Zurich, Switzerland, August 23–25, 2000, pp. 383–8.
33. De Robertis F, Birks EJ, Rogers P, Dreyfus G, Pepper JR, Khaghani A. Clinical performance with the Levitronix Centrimag short-term ventricular assist device. *J Heart Lung Transplant* 2006;25:181–6.
34. Linneweber J, Konertz W. Klinik für Kardiovaskuläre Chirurgie, clinical experience with the Levitronix Centrimag ventricular assist system. *Artif Organs* 2006;30:A8.
35. Levitronix LLC. Technical data. Available at: http://www.levitronix.com/Home.php. Accessed February 10, 2006.
36. Loree HM, Bourque K, Gernes DB, et al. The Heartmate III: design and in vivo studies of a maglev centrifugal left ventricular assist device. *Artif Organs* 2001;25:386–91.
37. Maher TR, Butler KC, Poirier VL, Gernes DB. HeartMate left ventricular assist devices: a multigeneration of implanted blood pumps. *Artif Organs* 2001;25:422–6.
38. Bourque K, Gernes DB, Loree HM, et al. HeartMate III: pump design for a centrifugal LVAD with a magnetically levitated rotor. *ASAIO J* 2001;47:401–5.
39. Bourque K, Gernes DB, Loree HM, et al. Incorporation of electronics within a compact, fully implanted left ventricular assist device. *Artif Organs* 2002;26:939–42.
40. Frazier OH, Tuzun E, Cohn W, Tamez D, Kadipasaoglu KA. Total heart replacement with dual centrifugal ventricular assist devices. *ASAIO J* 2005;51:224–9.
41. Chen C, Antaki JF, Ludlow J, Paden B, Long JW. Design optimization of the HeartQuest maglev VAD. *ASAIO J* 2001;47:135.
42. Chen C, Paden B, Antaki J, et al. A magnetic suspension theory and its application to the HeartQuest ventricular assist device. *Artif Organs* 2002;26:947–51.

15251594, 2006, 5, Downloaded from https://onlinelibrary.wiley.com/doi/10.1111/j.1525-1594.2006.00222.x by University Of California - Davis, Wiley Online Library on [18/02/2025]. See the Terms and Conditions (https://onlinelibrary.wiley.com/terms-and-conditions) on Wiley Online Library for rules of use; OA articles are governed by the applicable Creative Commons License

43. Bearnson G, Jacobs G, Miles S, et al. HEARTQUEST magnetically levitated centrifugal pump. *Artif Organs* 2006;30:A9.
44. Borovetz H, Badylak S, Boston JR, et al. The PediaFlow pediatric ventricular assist device. *Artif Organs* 2006;30:A9.
45. World Heart Corporation. Available at: http://www.worldheart.com/index.cfm. Accessed February 10, 2006.
46. Medquest Products. Available at: http://www.medquest-inc.com/index.html. Accessed February 10, 2006.
47. Onuma H, Murakami M, Masuzawa T. Novel maglev pump with a combined magnetic bearing. *ASAIO J* 2005;51:50–5.
48. Okada Y, Masuzawa T, Matsuda K, et al. Axial type self-bearing motor for axial flow blood pump. *Artif Organs* 2003;27:887–91.
49. Masuzawa T, Onuma H, Kim SJ, Okada Y. Magnetically suspended centrifugal blood pump with a self bearing motor. *ASAIO J* 2002;48:437–42.
50. Goldowsky M. Magnevad—the world's smallest magnetic-bearing turbo pump. *Artif Organs* 2004;28:945–52.
51. Goldowsky M, Lafaro R, Reed G. Magnevad status of design improvements human blood results and preliminary sheep trial. *Artif Organs* 2005;29:855–7.
52. Locke DH, Swanson ES, Walton JF, Willis JP, Heshmat H. Testing of a centrifugal blood pump with a high efficiency hybrid magnetic bearing. *ASAIO J* 2003;49:737–43.
53. MiTiHeart Corporation. Available at: http://www.mitiheart.com/index.html. Accessed February 2006.
54. Hoshi H, Asama J, Shinshi T, et al. Disposable magnetically levitated centrifugal blood pump: design and in vitro performance. *Artif Organs* 2005;29:520–6.
55. Hoshi H, Katakoa K, Ohuchi K, et al. Magnetically suspended centrifugal blood pump with a radial magnetic driver. *ASAIO J* 2005;51:60–4.
56. Asama J, Shinshi T, Hoshi H, Takatani S, Shimokohbe A. A new design for a compact centrifugal blood pump with a magnetically levitated rotor. *ASAIO J* 2004;50:550–6.
57. Asama J, Shinshi T, Hoshi H, Takatani S, Shimokohbe A. A compact highly efficient and low hemolytic centrifugal blood pump with a magnetically levitated impeller. *Artif Organs* 2006;30:184–91.
58. Hoshi H, Asama J, Hara C, et al. Detection of left ventricular function from the Mag-Lev impeller behavior. *Artif Organs* 2006;30(5):377–383.
59. Earnshaw S. On the nature of molecular forces which regulated the constitution of the luminiferous ether. *Trans Camb Phil Soc* 1842;7(Part 1):97–112.

15251594, 2006, 5, Downloaded from https://onlinelibrary.wiley.com/doi/10.1111/j.1525-1594.2006.00222.x by University Of California - Davis, Wiley Online Library on [18/02/2025]. See the Terms and Conditions (https://onlinelibrary.wiley.com/terms-and-conditions) on Wiley Online Library for rules of use; OA articles are governed by the applicable Creative Commons License

Abbott v. Miracor, IPR2025-00115
Abbott Ex. 1046, p. 15 of 15