UNITED STATES PATENT AND TRADEMARK OFFICE

BEFORE THE PATENT TRIAL AND APPEAL BOARD

ABBOTT LABORATORIES,

Petitioner,

v.

MIRACOR MEDICAL SA,

Patent Owner.

IPR2025-00116
Patent 11,754,077

PATENT OWNER MIRACOR MEDICAL SA'S SUR-REPLY TO PETITIONER'S REPLY

TABLE OF CONTENTS

TABLE OF AUTHORITIES ..... *iv*

LIST OF EXHIBITS ..... *v*

CHALLENGED CLAIMS ..... *viii*

I. INTRODUCTION 1

II. PERSON OF ORDINARY SKILL IN THE ART 1

III. CLAIM CONSTRUCTION 2

A. Petitioner Continues to Assert Two Claim Constructions That Contradict Its Own Unpatentability Positions 2

B. Axially Adjacent 4

1. The Board's Claim Construction 4

2. Petitioner's New Arguments Fail 5

a. Petitioner's Reliance on a New Exhibit from the Co-Pending Litigation Is Untrue 5

b. Petitioner's Arguments Contradict Its Own Statements Earlier in This Proceeding 7

3. Wampler Does Not Teach or Suggest a First Magnetic Device Axially Adjacent to a Magnetically Driven Rotor [1C], [16D] 8

4. Akamatsu Does Not Teach or Suggest a First Magnetic Device Axially Adjacent to a Magnetically Driven Rotor [1C], [16D] 9

C. Axially Closer 10

1. Wampler Does Not Teach or Suggest a Second Magnetic Device Positioned Axially Closer to the First Magnetic Device Than to the Rotor [16J] 12

2. Akamatsu Does Not Teach or Suggest a Second Magnetic Device Positioned Axially Closer to the First Magnetic Device Than to the Magnetically Driven Rotor [16J] 13

D. Bourque-2001 Fails to Teach a Rotor and Inflow Tube That Are Axially Aligned 14

1. The Board Agreed That Bourque-2001's Rotor and Inflow Tube Are Not Axially Aligned 14

2. Petitioner's New Claim Construction Argument Fails for Many Reasons 16

IV. PETITIONER'S COMBINATIONS FAIL 17

A. The Combination of Bourque and Wampler Fails Because Petitioner Relies on an Embodiment That Does Not Meet Its Asserted Motivation 19

1. The Second Embodiment Is Different from the First in Critical Ways 19

2. Petitioner's Argument That the Second Embodiment of Wampler Was Implanted at the Apex of the Heart Is False 22

B. A Person of Ordinary Skill Would Not Combine Bourque-2001 and Wampler 24

1. Petitioner Never Addresses Patent Owner's Cited Law That a Failure of Evidence for the Motivation to Combine, Even if It Is Outside the Claims, Dooms the Combination 25

2. Petitioner Is Wrong That Patent Owner Fails to Rebut Other Motivations to Combine 26

3. Petitioner's Proposed Motivation to Combine Undoubtedly Requires a Pump That Can be Placed Between the Apex of the Heart and the Diaphragm 27

4. Petitioner's Evidence for Its Motivation Fails Because a POSA Would Know That the Bourque Pump is Too Big to Meet the Described Motivation 28

C. A Person of Ordinary Skill Would Not Combine Schima and Akamatsu 30

V. PETITIONER'S REPLY DOES NOT REASONABLY ADDRESS ONE OR MORE SENSORS THAT DELIVER FEEDBACK SIGNALS TO AN EXTERNAL CONTROL UNIT 32

VI. CONCLUSION.....33

CERTIFICATE OF WORD COUNT.....34

CERTIFICATE OF SERVICE.....35

TABLE OF AUTHORITIES

Cases

Intelligent Bio-Systems, Inc. v. Illumina Cambridge Ltd.,
821 F.3d 1359 (Fed. Cir. 2016).....25

Revvo Techs. Inc. v. Cerebrum Sensor Techs., Inc.,
IPR2025-00632, Paper 20 (PTAB November 3, 2025).....2, 3

LIST OF EXHIBITS

Exhibit No.	Description
2001	Certification of Todd G. Vare
2002	Corrected Certification of Todd G. Vare
2003	Kenneth K. Liao et al., *End-Stage Congestive Heart Failure in the Adult Population: Ventricular Assist Devices*, Handbook of Cardiac Anatomy, Physiology, and Devices 725–732 (2015)
2004	Howard M. Loree II et al., *The HeartMate III: Design and In Vivo Studies of a Maglev Centrifugal Left Ventricular Assist Device*, 25 Artificial Organs 386–391 (2001)
2005	Greg W. Burgreen et al., *Computational Fluid Dynamics Analysis of a Maglev Centrifugal Left Ventricular Assist Device*, 28 Artificial Organs 874–880 (2004)
2006	David J. Farrar et al., *Design Features, Developmental Status, and Experimental Results With the Heartmate III Centrifugal Left Ventricular Assist System With a Magnetically Levitated Rotor*, American Society of Artificial Internal Organs (ASAIO) Journal 310–315 (2007)
2007	Abbott, *A Father of HeartMate 3 Wants A Bigger Family*, available at https://www.abbott.com/corpnewsroom/products-and-innovation/a-father-of-heartmate-3-wants-a-bigger-family.html (December 16, 2021)
2008	Kevin Bourque et al., *Design Rationale and Preclinical Evaluation of the HeartMate 3 Left Ventricular Assist System for Hemocompatibility*, American Society of Artificial Internal Organs (ASAIO) Journal 375–383 (2016)
2009	U.S. Patent No. 10,500,321 to Bourque (issued December 10, 2019)

Exhibit No.	Description
2010	American Heart Association News, *The past, present and future of the device keeping alive Carew, thousands of HF patients*, available at https://www.heart.org/en/news/2018/06/13/the-past-present-and-future-of-the-device-keeping-alive-carew-thousands-of-hf-patients (June 13, 2018)
2011	Chart of Petitioner's Reliance on Pleadings from Parallel Litigation for Claim Construction
2012	Reserved
2013	Donald Esmore et al., *VentrAssist Left Ventricular Assist Device: Clinical Trial Results and Clinical Development Plan Update*, 32 European Journal of Cardio-Thoracic Surgery 735–744 (2007)
2014	Transcript of Deposition of Peter Crosby (September 4, 2025)
2015	Declaration of Boris Leschinsky
2016	Curriculum Vitae of Boris Leschinsky
2017	Declaration of Dr. Robert Gallegos
2018	Curriculum Vitae of Dr. Robert Gallegos
2019	Richard Wampler et al., *A Sealless Centrifugal Blood Pump with Passive Magnetic and Hydrodynamic Bearings*, 23 Artificial Organs 780–784 (1999)
2020	Trever Symalla et al., *Choosing the Appropriate Left Ventricular Assist Device for Your Patient*, 36 (Suppl 2) Indian Journal of Thoracic and Cardiovascular Surgery S256–S264.
2021	Milad Hosseinipour et al., *Rotary Mechanical Circulatory Support Systems*, 4 Journal of Rehabilitation and Assistive Technologies Engineering, 1–24 (2017)

Exhibit No.	Description
2022	Martin Stoiber et al., *A Passive Magnetically and Hydrodynamically Suspended Rotary Blood Pump*, 33 Artificial Organs 250–257 (2009)
2023	HeartWare™ HVAD™ System: Instructions for Use (2018)
2024	Georg M. Wieselthaler, *Ventricular Assist Devices: The Future is Now*, University of California, San Francisco
2025	Jeffrey A. LaRose et al., *Design Concepts and Principle of Operation of the HeartWare Ventricular Assist System*, American Society of Artificial Internal Organs (ASAIO) Journal 285–289 (2010)
2026	Tomohiro Nishinaka et al., *The DuraHeart VAD, a Magnetically Levitated Centrifugal Pump: The University of Vienna Bridge-to-Transplant Experience*, 70 Circulation Journal 1421–1425 (2006)
2027	Transcript of Second Deposition of Peter Crosby (January 8, 2026)
2028	Transcript of Deposition of Dr. Georg Wieselthaler (January 15, 2026)
2029	Chart of Petitioner's Reliance on Positioning at Apex of Heart

CHALLENGED CLAIMS

Claim No.	Claim Language
[1PRE]	A system for assisting the blood circulation of a heart, comprising:
[1A]	a heart assist pump device deliverable to the heart and comprising: an inflow tube defining a blood inflow path and having a suction end insertable into a ventricle of the heart;
[1B]	a magnetically driven rotor assembly configured to be axially aligned with the inflow tube and to be spaced apart from the suction end when the suction end of the inflow tube is inserted into the ventricle,
[1C]	the magnetically driven rotor assembly comprising a first magnetic device that is rigidly coupled to and axially adjacent to a rotor
[1D]	[the rotor] having guide surfaces to produce centrifugal flow components,
[1E]	the magnetically driven rotor assembly being rotatable about a central axis within a surrounding stationary housing to act upon blood flowing from the inflow tube to the rotor
[1F]	while the magnetically driven rotor assembly is entirely spaced apart from the stationary housing by a gap sized for passage of the blood;
[1G]	a second magnetic device axially aligned with the inflow tube and positioned to magnetically drive rotation of the magnetically driven rotor assembly via a magneto coupling with the first magnetic device
[1H]	while [the second magnetic device is] being spaced apart and sealed from both the rotor and the first magnetic device of the magnetically driven rotor assembly,
[1I]	the second magnetic device being positioned axially spaced apart from the guide surfaces of the rotor;

Claim No.	Claim Language
[1J][1]	a blood outflow port positioned radially adjacent the guide surfaces of the rotor such that, when the blood is driven by the magnetically driven rotor assembly, the blood exits the surrounding stationary housing in a direction substantially perpendicular to the central axis of the magnetically driven rotor assembly,
[1K][2]	wherein the magneto coupling is configured to both drive rotation of the magnetically driven rotor assembly and orient the magnetically driven rotor assembly such that the magnetically driven rotor assembly remains entirely spaced apart from the surrounding stationary housing by the gap sized for passage of the blood; and
[1L][3]	an external control unit configured to regulate operation of the second magnetic device based upon a control value indicative of cardiac output,
[1M][4]	wherein the external control unit is connectable to the heart assist pump device for controlling the second magnetic device to thereby magnetically drive the rotation of the magnetically driven rotor assembly via the magneto coupling with the first magnetic device.
[2]	The system of claim 1, wherein the first magnetic device is configured to be positioned between the second magnetic device and the guide surfaces of the rotor of the magnetically driven rotor assembly.

[1] This element was labeled [1K] in the Petition's Claim Index, as label [1J] was skipped.
[2] This element was labeled [1L] in the Petition's Claim Index, as label [1J] was skipped.
[3] This element was labeled [1M] in the Petition's Claim Index, as label [1J] was skipped.
[4] This element was omitted from the Petition's Claim Index.

Claim No.	Claim Language
[3]	The system of claim 2, wherein the first magnetic device is configured to rotate together with the rotor relative to the surrounding stationary housing.
[4]	The system of claim 3, wherein the second magnetic device is positioned closer to the blood outflow port than to the suction end of the inflow tube.
[5]	The system of claim 1, wherein the magnetically driven rotor assembly is sealed from the second magnetic device and a drive source configured to regulate the operation of the second magnetic device.
[7]	The system of claim 1, further comprising one or more sensors configured to deliver feedback signals to the external control unit.
[10]	The system of claim 1, wherein the heart assist pump device is a catheter device.
[16PRE]	A system for assisting blood circulation of a heart, the system comprising:
[16A]	a heart assist pump device deliverable to the heart and comprising: an inflow tube defining a blood inflow path along an inflow axis and being insertable into a left ventricle;
[16B]	chamber walls at least partially defining a chamber to receive blood from the inflow tube;
[16C]	a magnetically driven rotor assembly configured to be axially aligned with the inflow axis and comprising a first magnetic device
[16D]	that [the first magnetic device] is rigidly coupled to and axially adjacent to a rotor
[16E]	[the rotor] having guide surfaces to produce centrifugal flow components,

Claim No.	Claim Language
[16F]	the rotor and the first magnetic device of the magnetically driven rotor assembly being rotatable within the chamber about an axis of rotation
[16G]	[the axis of rotation is] aligned with the inflow axis to drive the blood flowing from the inflow tube;
[16H]	a magnetic drive system comprising a second magnetic device axially aligned with the inflow axis
[16I]	and spaced apart from the magnetically driven rotor assembly such that a wall of the chamber walls defining the chamber is positioned between the magnetically driven rotor assembly and the second magnetic device,
[16J]	the second magnetic device positioned axially closer to the first magnetic device than to the rotor of the magnetically driven rotor assembly so as to magnetically drive rotation of the magnetically driven rotor assembly within the chamber via a magneto coupling with the first magnetic device; and
[16K]	a blood outflow port positioned radially outward of the guide surfaces of the rotor such that, when the blood is driven by the magnetically driven rotor assembly, the blood exits the chamber in a direction substantially perpendicular to the inflow axis,
[16L]	wherein the magneto coupling is configured to both drive rotation of the magnetically driven rotor assembly and orient the magnetically driven rotor assembly such that the magnetically driven rotor assembly remains entirely spaced apart from the chamber walls by a gap sized for passage of the blood; and
[16M]	an external control unit configured to control operation of the second magnetic device based on a control value indicative of cardiac output

Claim No.	Claim Language
[16N]	wherein the external control unit is connectable to the heart assist pump device for controlling the second magnetic device to thereby magnetically drive the rotation of the magnetically driven rotor assembly via the magneto coupling with the first magnetic device.
[17]	The system of claim 16, wherein the first magnetic device is rigidly coupled to the rotor of the magnetically driven rotor assembly at a position between the second magnetic device and the rotor.
[18]	The system of claim 16, wherein said gap sized for passage of the blood is configured to be occupied by the blood when the second magnetic device drives the rotation of the magnetically driven rotor assembly.
[19]	The system of claim 18, wherein the gap surrounds the magnetically driven rotor assembly.
[20]	The system of claim 18, wherein at least part of the gap extends radially outward from the magnetically driven rotor assembly.
[21]	The system of claim 20, wherein at least part of the gap extends along a face of the magnetically driven rotor assembly that is axially opposite from the inflow tube.
[22]	The system of claim 16, wherein the chamber is a first chamber within which the magnetically driven rotor assembly is positioned, and the magnetic drive system is positioned within a second chamber sealed from the first chamber.
[23]	The system of claim 22, wherein said wall of the chamber walls separates the first chamber from the second chamber.
[24]	The system of claim 16, wherein the first magnetic device comprises a permanent magnet.
[26]	The system of claim 16, further comprising one or more sensors configured to deliver feedback signals to the external control unit.

Claim No.	Claim Language
[28]	The system of claim 16, wherein the heart assist pump device is a catheter device.

I. INTRODUCTION

The Board should find that Petitioner has not carried its burden to show unpatentability of any of the challenged claims of the '077 patent. Petitioner's failures extend from its inappropriate and contradictory claim construction to its unmakeable combinations that cannot work. Each of Petitioner's four grounds of alleged unpatentability fails.

II. PERSON OF ORDINARY SKILL IN THE ART

Petitioner proposed, and the Board adopted, a level of ordinary skill in the art as "at least a bachelor's degree in engineering; knowledge and experience in human circulatory system anatomy and physiology; and at least five years' experience designing and developing implantable medical devices." Institution 10 (citing Pet. 6). Patent Owner proposed tailoring that definition to include at least five years' experience designing and developing implantable cardiac assist devices in particular. POR 3–5. Petitioner argues much about the experts, but does not seem to oppose this modification to the level of ordinary skill. Rep. 1–2. Patent Owner submits that the Board should adopt the modification to the level of ordinary skill.

III. CLAIM CONSTRUCTION

A. Petitioner Continues to Assert Two Claim Constructions That Contradict Its Own Unpatentability Positions

Petitioner proposes narrowing claim constructions for the terms "magneto coupling" and "by a gap sized for the passage of the blood" that Petitioner actually contradicts in its unpatentability positions. POR 6–10. On Reply, Petitioner doubles down by bluntly stating their narrow constructions are the correct constructions. Rep. 2–3. Petitioner continues to play games with claim construction—goading the Board into broad claim constructions here to achieve the best chance of proving unpatentability while maintaining its arguments for a completely different and more narrow claim construction in the district court where it will argue non-infringement. POR 6–10.

Recently, the Director vacated a Decision Granting Institution for just such game playing by a petitioner. *Revvo Techs. Inc. v. Cerebrum Sensor Techs., Inc.*, IPR2025-00632, Paper 20 (PTAB November 3, 2025). There, the petitioner adopted the patent owner's broad proposed claim constructions from the co-pending district court litigation. *Id.*, 2. The petitioner's claim construction positions were different than the narrow constructions that it proposed in the infringement case. *Id.* As happened here, the patent owner argued that these claim construction

positions amounted to gamesmanship. *Id.* Also as happened here, the Board disagreed and adopted the broader claim constructions.

The Director in *Revvo*, however, saw the issues differently. Referring to the change in the PTAB claim construction standard, the Director noted:

> [T]he rules discourage petitioners from seeking broader constructions at the Board to support a patentability challenge while seeking narrower constructions in litigation to avoid infringement liability. As the Office explained when it changed the claim construction standard used in inter partes reviews and post-grant reviews to match the standard used in litigation, '[petitioners] will have less flexibility to advance inconsistent arguments about claim scope, and will instead be required to choose a single claim construction that best captures the true meaning of the patent claim.'

Id., 4 (internal citations omitted). In *Revvo*, the Director found that the same claim construction tactics utilized by Petitioner here warranted vacating the institution. *Id.*, 4–5.

Adopting Petitioner's two claim constructions would result in excluding all of the Bourque, Wampler, and Akamatsu references because Bourque would lack the "by the blood flowing" limitation and all three would lack the "magneto

coupling" element. Patent Owner requests that the Board dismiss this IPR on this basis.

B. Axially Adjacent

Applying the Board's plain meaning construction, neither Wampler nor Akamatsu has a first magnetic device positioned *axially adjacent* to the magnetically driven rotor. In an effort to diffuse this problem with its asserted grounds, Petitioner spins a false story from a new exhibit from the co-pending litigation. The Board has already dismissed this tactic and should do so again.

1. The Board's Claim Construction

The Board applied the ordinary meaning of the term "axially adjacent," finding that the term meant "adjacent to one another as measured along a central axis." Institution 11–12. This construction is consistent with the intrinsic evidence. Institution 11, POR 5. The Board rejected Petitioner's arguments based on an assumed Patent Owner "interpretation" from the co-pending litigation. Institution 11. Petitioner's argument was based solely on Exhibit 1019—which did not support Petitioner's point. *Id*.; Pet. 20–22.

Based on this plain meaning, the Board concluded that Wampler, having a "first magnetic device" that is embedded inside the "magnetically driven rotor," did not teach or suggest a "a first magnetic device that is axially adjacent to a rotor

based on the positioning of its magnet segments 88 and impeller 74 because these components are not adjacent to one another as measured along the central or inflow axis of the device," as required by the claims. Institution 25–26; POPR 20–23. The Board reached the same conclusion for Akamatsu. Institution 26–27; POPR 56–63.

2. Petitioner's New Arguments Fail

Petitioner never addresses the plain meaning of "axially adjacent."

Petitioner never addresses the intrinsic evidence that shows the first magnetic device being disposed next to (adjacent to) a magnetically driven rotor. Institution 11; Ex. 1001, Fig. 2.

Instead, Petitioner introduces a new and different exhibit from the co-pending litigation that relates to a product accused of infringement. Rep. 3–14; Ex. 1036. Worse, Petitioner misrepresents what that exhibit shows.

a. Petitioner's Reliance on a New Exhibit from the Co-Pending Litigation Is Untrue

New Exhibit 1036 is an infringement claim chart showing how Abbott's current product infringes claim 1. Addressing the specific claim language at issue here ("a magnetically driven rotor . . . axially adjacent to a first magnetic device"), the exhibit clearly points out a "magnetically driven rotor" and a "first magnetic device" that are "axially adjacent:"

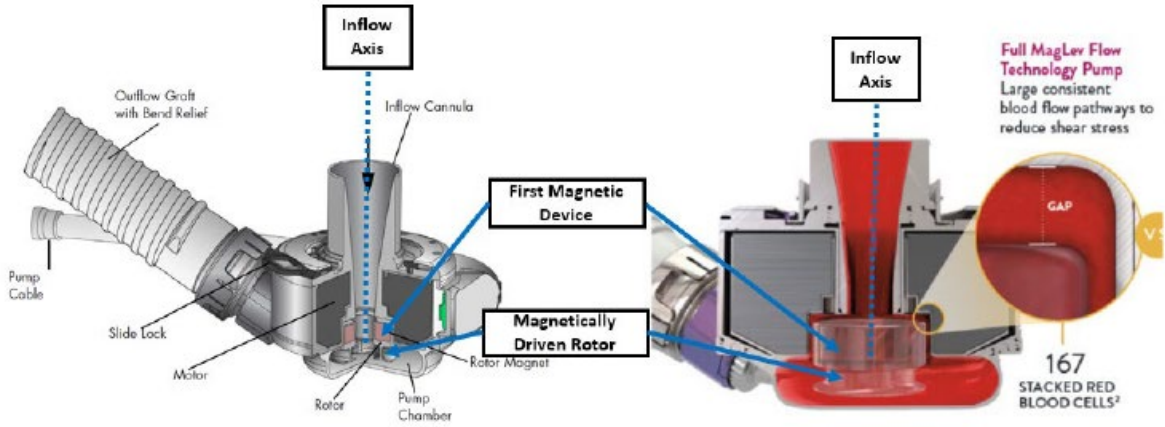

Ex. 1036, 5; Ex. 2027, 14:22–21:3 (Petitioner's expert prevaricating on what this image shows). In fact, all of pages 6–12, 16–18, and 21 make similar showings identifying a magnetically driven rotor and a first magnet that are adjacent along the central pump axis. Ex. 1036; Ex. 2027, 21:5–28:6 (discussing many of these figures).

Petitioner, however, points to one erroneously placed arrow on one half of the figure on page 20 of the Exhibit (while not recognizing the 16 correct figures in that document alone) and announces that Patent Owner has taken a position on axially adjacent in the co-pending litigation that is different than the position it takes here. Rep. 3–14. That announcement is false. The figure from page 5, reproduced above, specifically addressing the claim language at issue here, is perfectly consistent with Patent Owner's arguments and the Board's conclusions in the Institution Decision.

b. Petitioner's Arguments Contradict Its Own Statements Earlier in This Proceeding

Earlier in this proceeding Petitioner and its expert took the exact opposite position to the one they take now. In his opening Declaration, Mr. Crosby stated:

> I have been informed that in parallel litigation, the Patent Owner has asserted a theory of infringement that maps the impeller portion of the "rotor" of the "HeartMate 3" to the "magnetically driven rotor" element recited in Claim 1. Ex.1019, at pp. 5-6 (Complaint, Ex. 12).

Ex. 1003, ¶ 160. That is, when they thought that it helped them, Petitioner and its expert believed that the infringement charts in the co-pending litigation identified the impeller portion of the rotor as the magnetically driven rotor. Now, when they have a different objective, they believe that the infringement charts in the co-pending litigation identify the entire rotating mass as the magnetically driven rotor. In fact, Patent Owner identifies the impeller portion as the magnetically driven rotor in its infringement charts and Petitioner identifies the impeller portion as the magnetically driven rotor in Wampler. *See* Ex. 2014, 40:19–41:1 ("So the idea that a rotor is everything that rotates is not supported by the 356 patent itself. So I've tried to map the way the 356 patent uses the term to the way Wampler uses the term. And it appears that the 356 patent, the term rotor is really used to describe

the element that rotates that pumps the blood, and I've tried to use the same approach in the Wampler description.").

3. Wampler Does Not Teach or Suggest a First Magnetic Device Axially Adjacent to a Magnetically Driven Rotor [1C], [16D]

Petitioner and its expert have stated that they are relying exclusively on the "second" embodiment of Wampler and that Figure 13 of Wampler is representative of that embodiment. Rep. 17–19; Ex. 2027, 48:21–51:11; Ex. 1042, ¶ 82. Petitioner's markup of Figure 13 is provided below with impeller 74 (the "magnetically driven rotor") highlighted in pink and magnet segments 88 (the "first magnetic device") uncolored within the impeller:

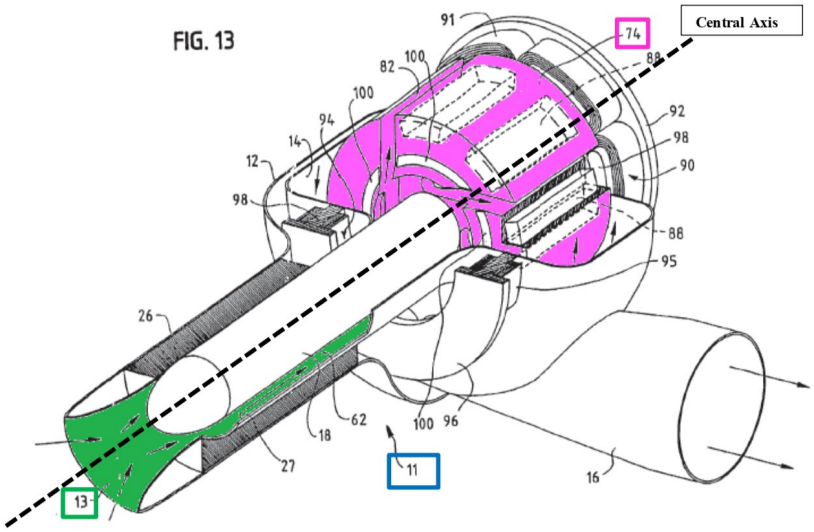

There is no doubt that the magnet segments 88 (the "first magnetic device") are ***not adjacent*** to the impeller 74 (the "magnetically driven rotor"). POR 11–14; Ex. 2015, ¶¶ 74–78.

Petitioner does not persuade that the Board was wrong when it agreed that the positioning of the magnet segments 88, housed within the impeller 74, is not adjacent to the impeller 74 along the axis. Institution 25–26.

4. Akamatsu Does Not Teach or Suggest a First Magnetic Device Axially Adjacent to a Magnetically Driven Rotor [1C], [16D]

Applying its determined meaning of this claim limitation as "adjacent to one another as measured along a central axis," the Board found that Petitioner does not show that Akamatsu teaches a first magnetic device that is . . . axially adjacent to a rotor." Institution 26–27.

Petitioner essentially points to FIG. 2 of Akamatsu alone as support for teaching of claim element [1C], [16D], alleging with an annotated figure that the reference teaches a permanent magnet (purple) axially adjacent an impeller (pink) along a central axis (black). Pet. 93–94; Ex. 1003, ¶ 682.

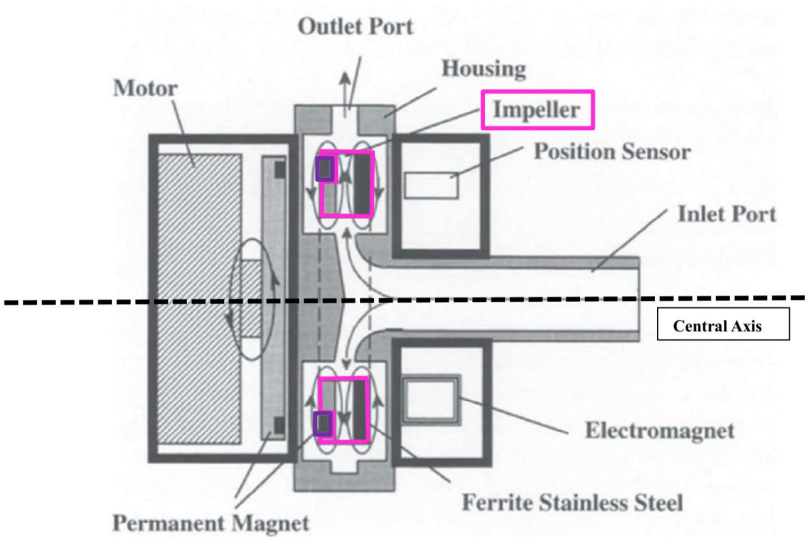

Fig. 2. Schematic cross section of the MSCP

Petitioner's marked up figure highlights that the permanent magnet is embedded within the impeller in an arrangement that is not axially adjacent. Indeed, Petitioner's expert Peter Crosby describes Akamatsu's teaching in exactly this way: "the permanent magnet embedded in the motor plate and the permanent magnet embedded in the impeller." Ex. 1003, ¶ 671 (citing Ex. 1006 at 4 and FIG. 2).

As with Wampler, there is no doubt that Akamatsu fails to teach or suggest this claim element.

C. Axially Closer

Petitioner also provides strained analysis regarding the recitation in claim 16 that the second magnetic device [be] positioned axially closer to the first magnetic device than to the rotor. As with "axially adjacent," their arguments are based on an assumed Patent Owner "interpretation" from the co-pending litigation. Rep. 8–14.

As noted above, new Exhibit 1036 is an infringement claim chart showing how Abbott's current product infringes claim 1. Addressing the specific claim language at issue here ("the second magnetic device [be] positioned axially closer to the first magnetic device than to the rotor"), the exhibit notes that a "second

magnetic device" is positioned axially closer to the "first magnetic device" than to the "rotor" with reference to the following figure:

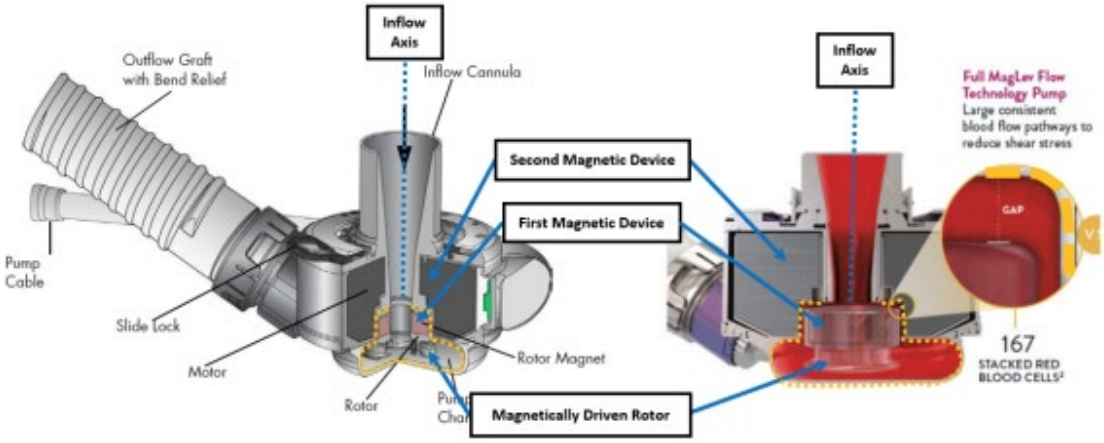

Ex. 1036, 8. None of the various colored boxes added by Petitioner in their Reply are included in the exhibit, and Patent Owner does not agree with Petitioner's delineations here.

Petitioner has simply announced that Patent Owner has taken a position on axially closer in the co-pending litigation that is different than the position it takes here. Rep. 8–14. That announcement is false. The figure from page 8, reproduced above, specifically addressing the claim language at issue here, is perfectly consistent with Patent Owner's arguments and the Board's conclusions in the Institution Decision.

1. Wampler Does Not Teach or Suggest a Second Magnetic Device Positioned Axially Closer to the First Magnetic Device Than to the Rotor [16J]

Petitioner and its expert have stated that they are relying exclusively on the "second" embodiment of Wampler and that Figure 13 of Wampler is representative of that embodiment. Rep. 17–20; Ex. 2027, 48:21–51:11; Ex. 1042, ¶¶ 82–84. Petitioner's markup of Figure 13 is provided below with impeller 74 (the "magnetically driven rotor") highlighted in pink and magnet segments 88 (the "first magnetic device"), as well as stators 90, 94 (the "second magnetic device"), uncolored within the impeller:

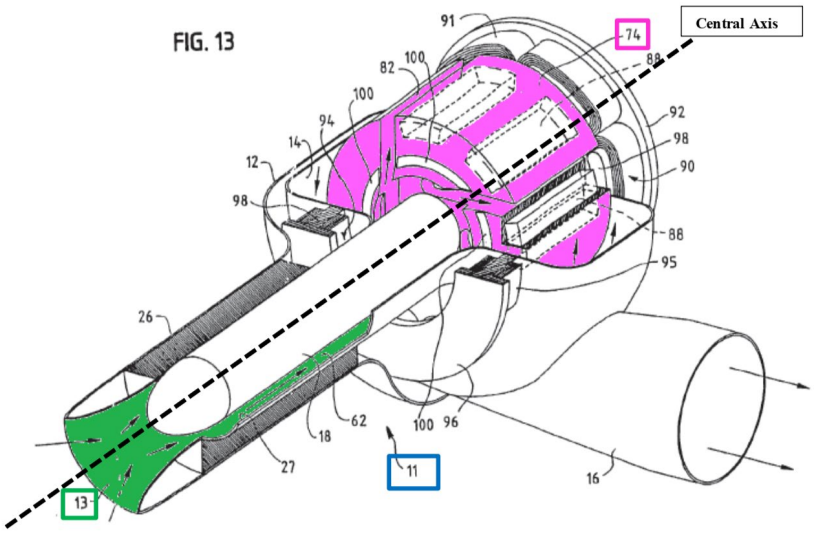

There is no doubt that the motor stators 90, 94 (the "second magnetic device") are not axially closer to the magnet segments 88 (the "first magnetic device") than to the impeller 74 (the "magnetically driven rotor"). POR 14–19.

Petitioner is not convincing in its attempt to persuade that the magnet segments 88, housed within the impeller 74, are axially closer to the motor stators 90, 94 than to the impeller 74.

2. Akamatsu Does Not Teach or Suggest a Second Magnetic Device Positioned Axially Closer to the First Magnetic Device Than to the Magnetically Driven Rotor [16J]

Petitioner essentially points to FIG. 2 of Akamatsu alone as support for teaching of claim element [16J], alleging with an annotated figure that the reference teaches a first magnet (purple) axially closer to a second magnet (motor at left) than to an impeller (pink). Pet. 112; Ex. 1003, ¶ 820.

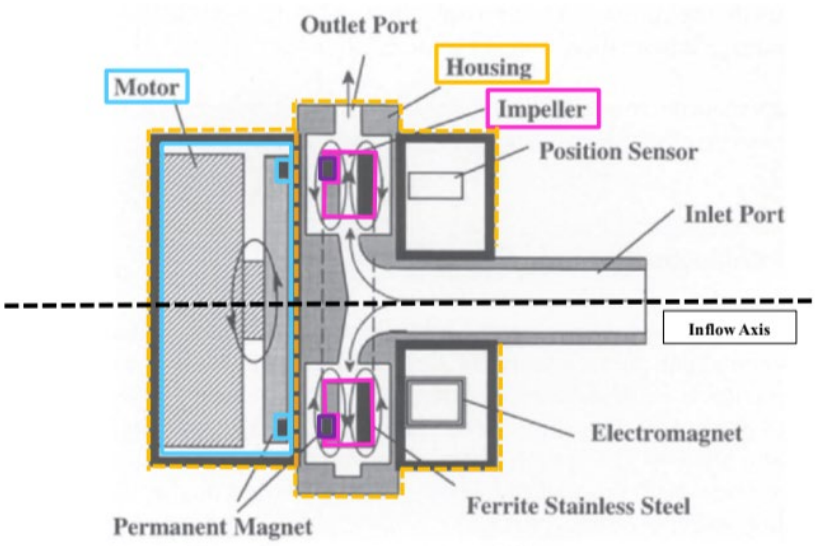

Fig. 2. Schematic cross section of the MSCP

Petitioner's marked up figure highlights that the permanent magnet is embedded within the impeller in an arrangement that does not place the purple bounded magnet axially closer to the motor magnet than the pink bounded

impeller. Indeed, Petitioner's expert Peter Crosby describes Akamatsu's teaching in exactly this way: "the permanent magnet embedded in the motor plate and the permanent magnet embedded in the impeller." Ex. 1003, ¶ 671 (citing Ex. 1006 at 4 and FIG. 2).

As with Wampler, there is no doubt that Akamatsu fails to teach or suggest this claim element.

D. Bourque-2001 Fails to Teach a Rotor and Inflow Tube That Are Axially Aligned

The Bourque-2001 reference fails to teach or suggest that its inflow tube is axially aligned with its rotor, as required by the claims. The Board agreed with this premise. Institution 14–19. Despite never proposing a claim construction for "axially aligned," Petitioner now looks to the intrinsic evidence to suggest that axially aligned includes structures that are not axially aligned. Petitioner is wrong on the evidence and wrong on the merits.

1. The Board Agreed That Bourque-2001's Rotor and Inflow Tube Are Not Axially Aligned

Based on Petitioner's own characterizations of the "inflow tube" (colored in green) and "magnetically driven rotor" (colored in pink), the Board concluded that the magnetically driven rotor is perpendicular to the inflow tube rather than axially aligned with the inflow tube:

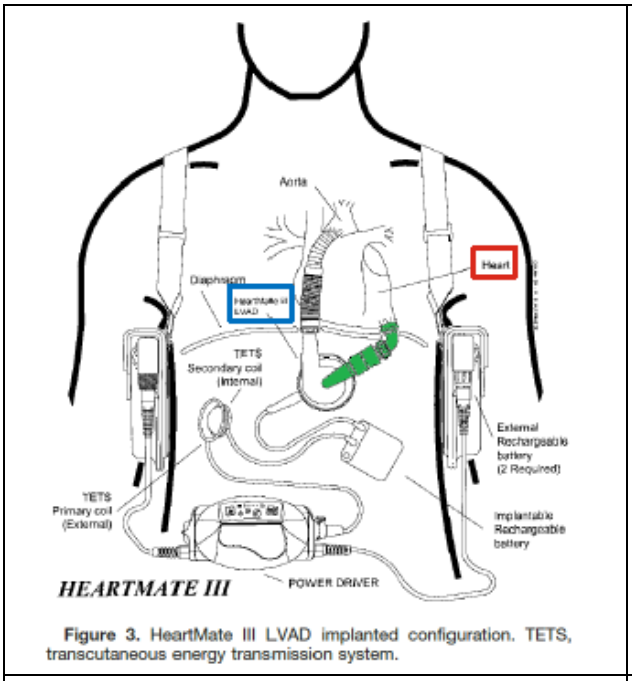

Figure 3. HeartMate III LVAD implanted configuration. TETS, transcutaneous energy transmission system.

Pet. 54

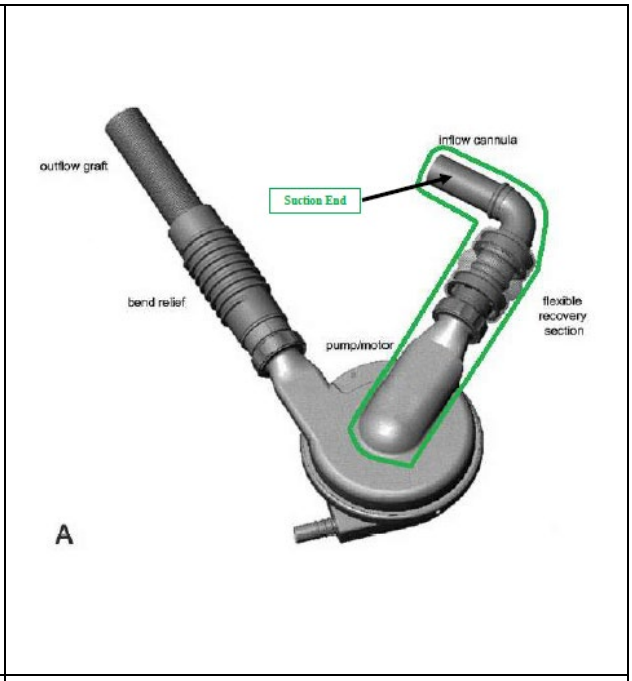

Ex. 1003, ¶ 412

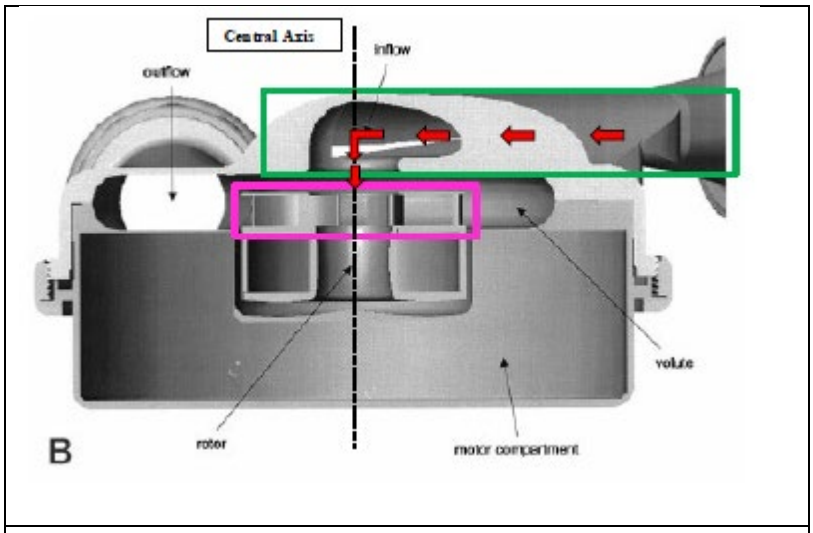

Pet. 55

Institution 14–19; POR 28–31.

2. Petitioner's New Claim Construction Argument Fails for Many Reasons

Petitioner accuses Patent Owner of taking the position that "axially aligned" requires the entirety of the inflow tube to be aligned in a straight, unbent line along the rotor's axis. Rep. 20–22. This is untrue and unnecessary—Patent Owner's position is that an inflow tube that is perpendicular to the rotor's axis is not axially aligned with the rotor's axis. POR 28–31.

Nevertheless, Petitioner turns to the intrinsic evidence, namely Fig. 1, to argue that the "sole" embodiment of the '077 patent does not have a perfectly straight inflow tube—and so Bourque-2001's perpendicular inflow tube can be axially aligned. Rep. 20–22.

Petitioner fails to recognize that Fig. 2 shows axial alignment between the rotor and the inflow tube. Ex. 2015, ¶ 124. Indeed, Petitioners expert Mr. Crosby agreed that Figure 2 illustrates an embodiment of the invention, agreed that the rotational axis of the rotor 18 (colored pink below using Petitioner's color convention) is straight up and down in the page, and agreed that the inflow tube 9 (colored green below) also extends straight up and down in the page. Ex. 2027, 28:10–32:5.

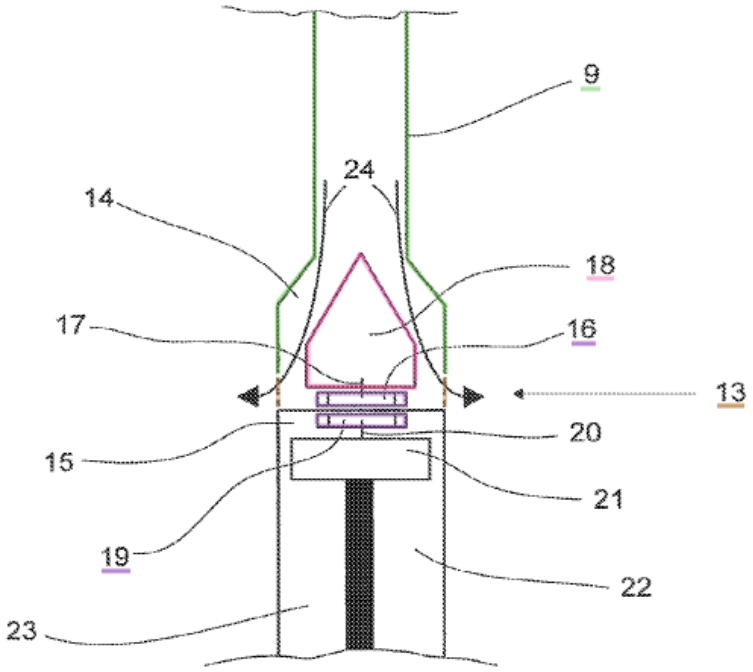

Ex. 1001, Figure 2 (annotated with color).

When asked whether the inflow tube and rotor illustrated in Figure 2 were axially aligned, Mr. Crosby asserted that he could not answer because he has never formed an opinion about what "axially aligned" means. Ex. 2027, 32:6–33:17. This position would seem to make it difficult for Petitioner to prove its case.

IV. PETITIONER'S COMBINATIONS FAIL

Petitioner argued strenuously in its Petition and opening expert declaration that the reason why a person of ordinary skill in the art would combine Bourque-2001 and Wampler was so that the Bourque-2001 pump could be placed at the apex of the heart in the same manner as Wampler. *See* Ex. 2029 (listing 20 times that Petitioner and its expert make this claim). Patent Owner persuasively

explained that a skilled person would not see it that way—that the Bourque-2001 pump was simply too large and heavy to fit at the apex of the heart and that a POSA would find the combination unusable. Petitioner never disputes this evidence or explanation. Instead, Petitioner points to other pumps that are not part of its grounds and incorrectly argues that it does not matter whether the pump would work for the motivated purpose.

Petitioner also has a problem with its presentation of Wampler. It admits that it relies only on the second embodiment of Wampler—but when it does so, it loses its teaching of placing the pump at the apex of the heart. In an attempt to cure this, Petitioner argues that the second embodiment of Wampler became the HeartWare HVAD product that was ultimately implanted at the apex—but cross-examination showed that HeartWare HVAD was a different pump whose structure was not disclosed before the priority date.

Turning to Akamatsu and Schima, a POSA looking at Akamatsu, like Bourque-2001, would find it to be too big and heavy to mount at the apex of the heart pursuant to Petitioner's motivation. Not being able to argue that a POSA would see it differently, Petitioner argues that the Akamatsu became the DuraHeart pump, which was implanted more than 20 times. We learned on cross-examination, however, that the DuraHeart pump was implanted in a preperitoneal pocket with a

perpendicular inflow tube just like Bourque-2001 because "it was definitely too big" to fit anywhere else.

A. The Combination of Bourque and Wampler Fails Because Petitioner Relies on an Embodiment That Does Not Meet Its Asserted Motivation

Petitioner insists that it does not rely on the first embodiment of Wampler—which is the embodiment that is mounted at the apex of the heart—but instead relies on the second embodiment with no motivation, teaching, or reasons as to why the second embodiment would be mounted in the same manner as the first.

1. The Second Embodiment Is Different from the First in Critical Ways

The Petition in this matter depends on Figure 5 of Wampler. For claim elements [1A], [1L], and [1M] (as well as claim elements [16A], [16M], and [16N]), Petitioner relies on the pump embodiment shown in Wampler's FIGS. 1–8. Pet. 16–17, 38–41, 45, 51. Petitioner must do so because only this first embodiment of Wampler is illustrated and described as being delivered to the heart and including controller 59 and power supply 61 that "may be worn external by the user." Ex. 1008, ¶¶ [0070], [0075], FIG. 5.

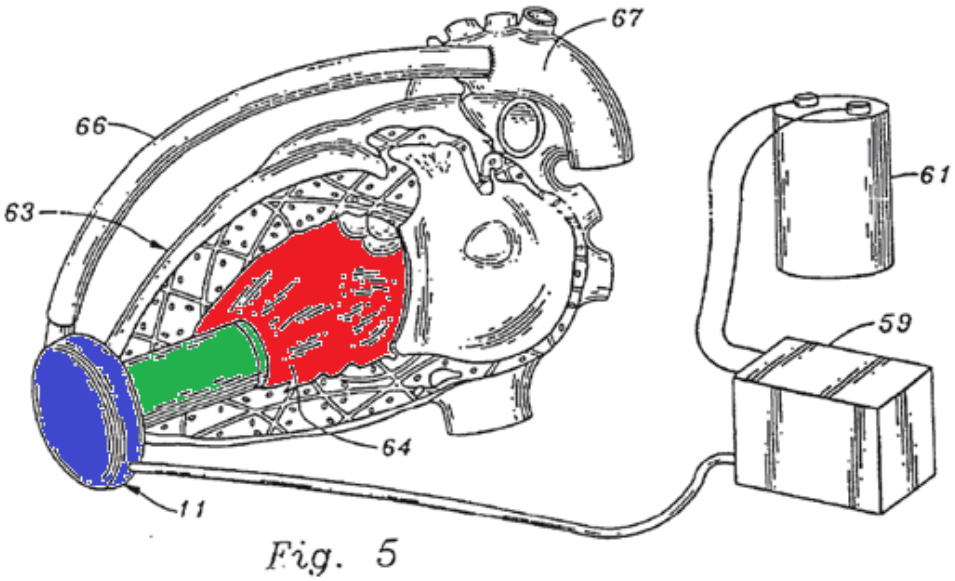

Pet. 17.

The Petition cites again to Figure 5, and Wampler's description of it, for the purpose of combining Wampler with Bourque-2001 to allegedly teach that the inflow tube that is inserted into the apex of the left ventricle is axially aligned with the rotor. Pet. 56–57.

Now, Petitioner asserts strenuously that it does not rely on the first embodiment of Wampler (including Figure 5), but only on the second embodiment. Rep. 17–19. In doing so, Petitioner argues that it need not find a motivation to combine features between the first and second embodiments, citing case law for the proposition that no such motivation is needed when the prior art explicitly contemplates the combination of the disclosed functionalities. *Id.*, 18–19.

Not only does Wampler not explicitly contemplate this combination, but actually teaches away from it. Wampler says of Figure 5 that "[g]ood anatomic compatibility is possible since the pump casing is ***compact and disc-shaped***, fitting well between the apex of the heart and the adjacent diaphragm." Ex. 1008, ¶ [0076] (emphasis added); Ex. 2015, ¶ 138. But the second embodiment has a very different size and shape of the portion of the device that would have to fit between the apex and diaphragm.

Comparing the "disc-shaped" portions of the first and second embodiments in the drawings below, it is readily apparent that the size and shape are different. Ex. 2027, 50:10–51:11 (Petitioner expert agreeing that Figs. 3 and 13 are partial sectional views of the first and second embodiments, respectively).

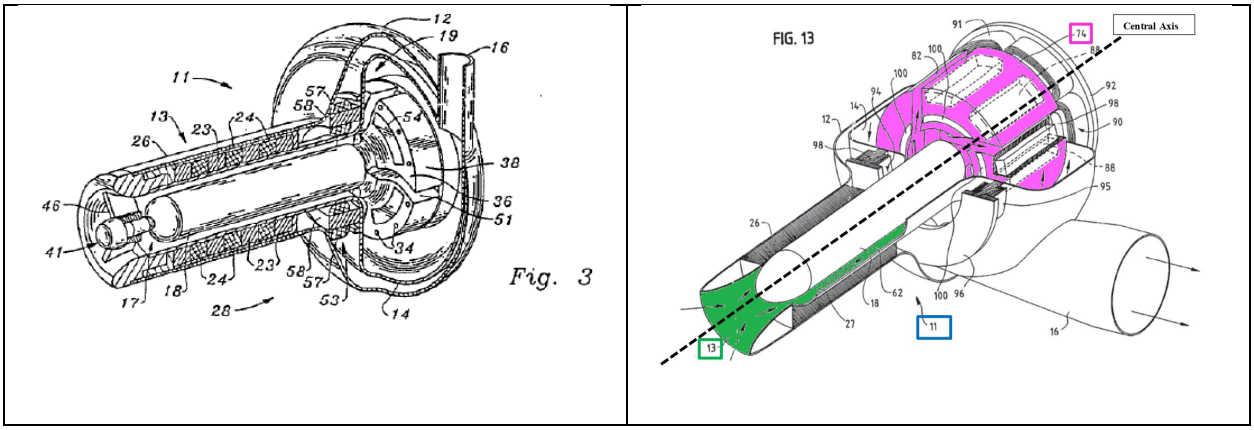

As can be seen in the presentation of these two figures, the impeller 74 of Figure 13 is much thicker than the impeller 19 of Figure 3, resulting in a thicker cylindrical shape for the second embodiment, not the compact, disc-shaped first

embodiment that is critical for Petitioner's case. And this is no accident. Discussing impeller 74, Wampler explains that this thickness of the impeller allows for fewer blades and results in less damage to the blood being pumped while still maintaining pumping efficiency. Ex. 1008, ¶ [0078].

Petitioner does not describe a motivation for changing the device of Figure 13 to provide the compact, disc-shaped effect of Figure 3—or even whether such a change is possible. Instead, Petitioner says that it is not combining elements from different embodiments—when Petitioner plainly does.

Because there is no evidence that the second embodiment of Wampler, the only one relied upon by Petitioner, is or even can be mounted to the apex of the heart, this embodiment fails to meet Petitioner's motivation to change Bourque-2001 to match Wampler.

2. Petitioner's Argument That the Second Embodiment of Wampler Was Implanted at the Apex of the Heart Is False

Petitioner tries to bolster its case by asserting that the HeartWare pump had been developed from Wampler's second embodiment and was implanted at the apex of the heart before the priority date of the '077 patent. Rep. 28–30. There are numerous problems with this assertion.

First, the HeartWare HVAD pump appears nowhere in the four grounds asserted in the Petition.

Further, there are no documents evidencing the structure of the HeartWare pump before the priority date. Petitioner and its experts refer to Exhibits 1015 and 1044—both of which are press releases with precious little information about the structure of the pump.

Petitioner's expert Crosby states in his Reply Declaration that the HeartWare HVAD design was developed from the Wampler second embodiment, but admitted on cross-examination that he had no idea what the structure of the HeartWare HVAD pump was. Ex. 1042, ¶ 111; Ex. 2027, 36:17–48:13.

Still further, Petitioner's expert Wieselthaler asserts that the HeartWare HVAD "progressed from the design disclosed in Wampler's Patent" but provides no documentation to suggest that the devices were similar. Ex. 1041, ¶ 53. Again, on cross-examination, Dr. Wieselthaler, faced with the images below, had to admit that the second embodiment of Wampler and the HeartWare HVAD were different pumps:

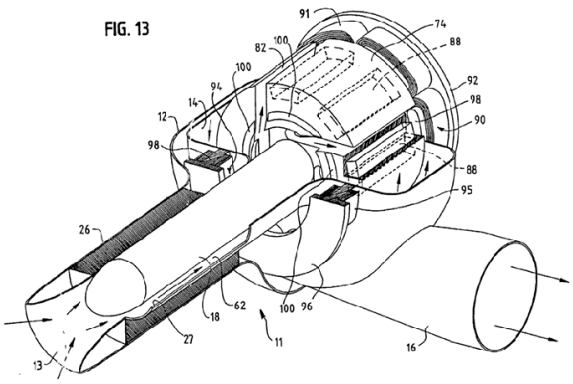	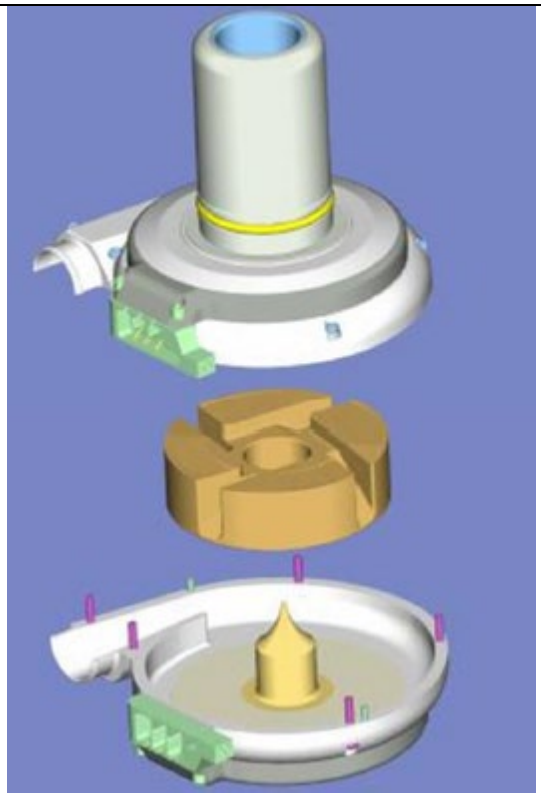
Ex. 1041, ¶ 53 (Wampler Fig. 13)	Ex. 2024, 51 (HeartWare HVAD)

Ex. 2027, 54:13–57:15, 58:3–58:10 (Wampler embodiment "never came into existence").

B. <u>A Person of Ordinary Skill Would Not Combine Bourque-2001 and Wampler</u>

Petitioner's proposed motivation to combine fails because the Bourque-2001 pump is simply too big to meet the goals set by Petitioner's motivation. POR 32–48. Indeed, Richard Wampler himself criticizes magnetic suspension pumps like Bourque-2001 as being too big and heavy. POR 32–33; Ex. 2015, ¶ 141; Ex. 2019,

780. Petitioner makes all manner of arguments in response, but never says that a POSA would think that the Bourque-2001 pump would fit at the apex of the heart, as stated in Petitioner's motivation.

1. Petitioner Never Addresses Patent Owner's Cited Law That a Failure of Evidence for the Motivation to Combine, Even if It Is Outside the Claims, Dooms the Combination

Critically, Patent Owner's Response cited case law, and in particular the *Intelligent Bio-Systems* case, to make the point that, if a skilled person would know that the combination would not work for the stated motivation, then motivation to combine fails even if the reason why it fails falls outside the claims. POR 43–46. In essence, even though the claims do not have a space constraint requirement, the undisputed fact that Bourque-2001 will not fit at the location necessary for the motivation is "central to a finding of no motivation to combine." *Intelligent Bio-Systems, Inc. v. Illumina Cambridge Ltd.*, 821 F.3d 1359, 1367–68 (Fed. Cir. 2016).

Petitioner never responds to this argument, simply stating that there is no space constraint requirement in the claims. Rep. 22. Petitioner's motivation fails and the combination cannot be made.

2. Petitioner Is Wrong That Patent Owner Fails to Rebut Other Motivations to Combine

Petitioner claims that Patent Owner "fails to rebut multiple, independent motivations to combine Bourque and Wampler." Rep. 23–26. Patent Owner addresses those reasons specifically at pages 46 to 48 of its POR. The reasons are not independent, and they further fail on their own.

Petitioner argues for the removal of the "flow restrictive elbow." Rep. 23–24. But Mr. Bourque himself argued in favor of the elbow because it created a swirl that prevented stagnation of the flow and thus prevented thrombus formation. POR 47; Ex. 2015, ¶ 157; Ex. 2005, 878. Further, a skilled person would recognize that removing the elbow from this large and heavy pump would leave the pump with no practical way to be implanted in a human. Ex. 2015, ¶¶ 128–164; Ex. 2017, ¶¶ 42–69.

Petitioner argues that the combination would eliminate "peripheral hardware." Rep. 24–25. Petitioner criticizes Patent Owner's position on this point, but misses the critical first step in Patent Owner's analysis—the peripheral hardware is only eliminated if the pump is placed at the apex of the heart. POR 47–48; Ex. 2015, ¶ 158. Otherwise, the pump would need to be connected to a cannula ("peripheral hardware") for routing blood from the heart. *Id.*; *see also* Ex. 2027,

12:6–13:19 (describing for the VentrAssist pump that the inflow cannula attaches to the pump using a threaded element).

Far from "fails to rebut," Patent Owner has pointed to a logical and undisputed flaw in this motivation argument for which Petitioner has no response.

Petitioner argues that the references "are analogous." Rep. 24–25. Patent Owner very much disputes the argument that the proposed modification is a mere rearrangement of old elements—in particular, that there is any evidence for this proposition. POR 48. The more critical issue, even if the Bourque-2001 and Wampler references are in the same field, is that a skilled person would read those references and understand that it would be practically impossible to combine them because there would be no way to implant the resulting device. POR 36–43 ("A POSA at the priority date would not have believed that the prototype HeartMate III pump of Bourque-2001 could have been successfully placed at the apex of the heart, as required by the stated motivation to combine, and would not have been so motivated." (citations omitted)).

3. Petitioner's Proposed Motivation to Combine Undoubtedly Requires a Pump That Can be Placed Between the Apex of the Heart and the Diaphragm

Petitioner relies on Wampler's statement that its "pump casing is compact and disc-shaped, fitting well between the apex of the heart and the adjacent

diaphragm." Ex. 1008, ¶ [0076]. The Petition and associated declaration refer to positioning the combination at this location at least 20 times. Ex. 2029. The Petition describes the motivation to combine this way:

> Instead of borrowing parts from predecessor systems, a POSITA would have adhered to the express teachings of Wampler-169, which focused on "[g]ood anatomic compatibility" so that the device "fit[s] well between the apex of the heart and the adjacent diaphragm," eliminating the need for a peritoneal pocket dissection associated with increased rates of infection.

Pet. 86–87. The Petition goes on to say that to "implant the device at the cardiac apex, a POSITA would have used the Bourque-2001/Wampler-169 combination." Pet. 87–88.

4. Petitioner's Evidence for Its Motivation Fails Because a POSA Would Know That the Bourque Pump is Too Big to Meet the Described Motivation

Petitioner never disputes that the Bourque-2001 pump is too big for the combination's intended purpose. Instead, Petitioner argues incorrectly that it doesn't matter whether the Bourque-2001 pump is fit for the stated motivation. Rep. 25–26. Petitioner argues that a different pump that is not part of any asserted ground—the HeartWare HVAD—was being used in clinical trials (even if the structure of the pump was undisclosed). Rep. 23, 28–30. Petitioner also argues that

Mr. Bourque himself recognized in 2006 that the Bourque-2001 pump was too big (though this admission came in a 2021 interview and the redesign that followed this recognition was first disclosed in a 2016 ASAIO article). Rep. 31–32; *contra* POR 41–43, Ex. 2015, ¶¶ 151–155.

Petitioner argues that Bourque-2001 describes the specific placement of its pump in a peritoneal pocket as the best option—but the law doesn't require Petitioner's alternative placement (at the apex of the heart) to be the best option—only a suitable option. Rep. 25–26. But the whole point of Patent Owner's extensive analysis of the size of the Bourque-2001 pump is to show that it was practically impossible to place the pump at the apex of the heart because it will not fit. POR 36–43. The apex of the heart is not a suitable option for implantation of the Bourque-2001 pump.

Petitioner even turns to a further pump (VentrAssist) that is not part of any ground asserted in the Petition and says that this pump, even though it is not implanted at the apex of the heart, is evidence of something. Rep. 26–27. Even if the VentrAssist pump were relevant to the asserted grounds, that pump is smaller than Bourque-2001 and Petitioner provides no evidence that a POSA would use Bourque-2001 in the same way.

Petitioner never disputes that the Bourque-2001 pump was too big to fit into its reasons for combining with Wampler.

C. A Person of Ordinary Skill Would Not Combine Schima and Akamatsu

Akamatsu, like Bourque-2001, is simply too big to be implanted at the apex of the heart, and this undermines Petitioner's reasons for motivation. POR 58–64; Ex. 2015, ¶¶ 182–201 ("even if a POSA were to have combined Schima and Akamatsu, they would not have understood that implantation at the apex of the heart with an inlet tube disposed in the left ventricle of the heart was possible").

Petitioner responds that Akamatsu not only would fit at the apex of the heart, but that its alleged commercial embodiment ("the DuraHeart") was implanted in that way. Rep. 27–28. We discovered on cross-examination, however, that the DuraHeart pump was an altered version of the Akamatsu pump—set up for implantation in a preperitoneal pocket with a perpendicular inflow tube exactly like the similarly sized Bourque-2001 pump:

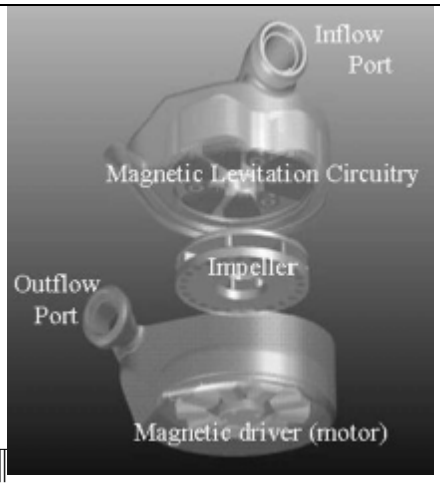 ¶	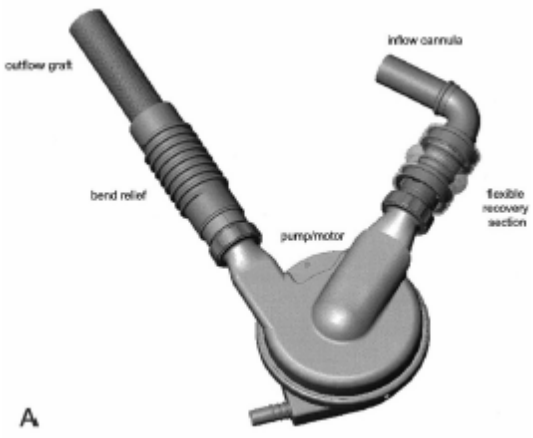
Ex. 2026, Figs. 1, 3	Bourque-2001, Fig. 1(A)

Ex. 2026, 1423; Ex. 2028, 38:23–40:21 (Petitioner's expert, asked about implantation of DuraHeart at the apex of the heart, responding "it was definitely too big").

Remarkably, Patent Owner expert Leschinsky predicted exactly that the Akamatsu pump would need to be implanted in a preperitoneal pocket like Bourque-2001 because it was too large. Ex. 2015, ¶ 199. Petitioner's expert, who

implanted the DuraHeart, confirmed Mr. Leschinsky's intuition. Ex. 2028, 38:23–40:21.

Petitioner provides no reliable response to Patent Owner's arguments regarding the lack of evidence supporting a motivation to combine Akamatsu and Schima. This ground should be rejected.

V. PETITIONER'S REPLY DOES NOT REASONABLY ADDRESS ONE OR MORE SENSORS THAT DELIVER FEEDBACK SIGNALS TO AN EXTERNAL CONTROL UNIT

For both of its combinations, Petitioner's Reply betrays that there is no teaching of an external control unit [1L], [1M], [16M], [16N] or the presence of one or more sensors that deliver feedback signals to that external control unit [Claims 7, 26]. Rep. 32, 36. There is no disclosure that the sensors disclosed in the references are delivered to an external control unit that controls operation of the pump. POR 26–27, 49–50, 55–58, 69–70.

VI. CONCLUSION

For the reasons articulated above and in Patent Owner's Response (Paper 23), the Board should find that the challenged claims of the '077 patent have not been shown to be unpatentable.

Respectfully submitted,

Date: January 22, 2026

/ Joshua P. Larsen /

Joshua P. Larsen
Reg. No. 62,761

Lead Counsel for Patent Owner
Miracor Medical SA

Barnes & Thornburg LLP
11 South Meridian Street
Indianapolis, Indiana 46204
Telephone: (317) 231-6422
Facsimile: (317) 231-7433
E-mail: joshua.larsen@btlaw.com

CERTIFICATE OF WORD COUNT

Under 37 C.F.R. § 42.24(d), the undersigned certifies that the foregoing PATENT OWNER MIRACOR MEDICAL SA'S SUR-REPLY TO PETITIONER'S REPLY has 5,430 words, which is less than the 5,600 word limit, as determined by the word count feature of the word-processing system used to prepare this paper.

/ Joshua P. Larsen /
Joshua P. Larsen
Reg. No. 62,761

Lead Counsel for Patent Owner
Miracor Medical SA

CERTIFICATE OF SERVICE

Under 37 C.F.R. § 42.6(e), the undersigned certifies that on this 22nd day of January 2026, I caused a true and correct copy of the foregoing PATENT OWNER MIRACOR MEDICAL SA'S SUR-REPLY TO PETITIONER'S REPLY, together with all exhibits filed therewith, to be served via e-mail on the following counsel of record for Petitioner:

Scott M. Border
sborder@winston.com
Charles B. Klein
cklein@winston.com
Saranya Raghavan
sraghavan@winston.com
Nimalka R. Wickramasekera
nwickramasekra@winston.com

/ Joshua P. Larsen /
Joshua P. Larsen
Reg. No. 62,761

Lead Counsel for Patent Owner
Miracor Medical SA