US006360102B1

(12) **United States Patent**
**Havinis et al.**

(10) **Patent No.: US 6,360,102 B1**
(45) **Date of Patent: Mar. 19, 2002**

(54) **SYSTEM AND METHOD FOR DEFINING A SUBSCRIBER LOCATION PRIVACY PROFILE**

(75) Inventors: **Theodore Havinis**, Plano; **David Boltz**, Garland, both of TX (US)

(73) Assignee: **Ericsson Inc.**, Research Triangle Park, NC (US)

( * ) Notice: Subject to any disclaimer, the term of this patent is extended or adjusted under 35 U.S.C. 154(b) by 0 days.

(21) Appl. No.: **09/151,050**

(22) Filed: **Sep. 10, 1998**

(51) **Int. Cl.**[7] ..... **H04Q 7/06**
(52) **U.S. Cl.** ..... **455/457**; 455/433; 455/411
(58) **Field of Search** ..... 455/433, 456, 455/457, 440, 404, 435, 411; 72/715; 701/208

(56) **References Cited**

U.S. PATENT DOCUMENTS

5,033,076 A * 7/1991 Jones et al. ..... 379/88.2
5,570,412 A * 10/1996 LeBlanc et al. ..... 455/456
5,602,903 A * 2/1997 LeBlanc et al. ..... 455/456
5,614,914 A * 3/1997 Bolgiano ..... 342/364
5,742,668 A * 4/1998 Pepe ..... 379/58
5,815,808 A * 9/1998 Valentine ..... 455/422
5,901,352 A * 5/1999 St-Pierre et al. ..... 455/426
5,918,159 A * 6/1999 Fomukong ..... 455/38.1
6,038,451 A * 3/2000 Syed ..... 455/445
6,044,265 A * 3/2000 Roach, Jr. ..... 455/419
6,049,718 A * 4/2000 Stewart ..... 455/456
6,101,387 A * 8/2000 Granberg et al. ..... 455/433
6,131,067 A * 10/2000 Girerd ..... 701/213
6,169,899 B1 * 1/2001 Havinis et al. ..... 455/433
6,181,937 B1 * 1/2001 Joensuu ..... 455/433

* cited by examiner

*Primary Examiner*—Thanh Cong Le
*Assistant Examiner*—Nick Corsaro
(74) *Attorney, Agent, or Firm*—Jenkens & Gilchrist, P.C.

(57) **ABSTRACT**

A telecommunications system and method is disclosed for allowing each mobile subscriber that has subscribed to location services to define a Subscriber Location Privacy Profile (SLPP) containing a list of preferred subscribers that have permission to position the mobile subscriber. The SLPP can also define the conditions under which each of the preferred subscribers can position the mobile subscriber. The SLPP is preferably connected to the mobile subscriber's main subscription record in the Home Location Register and can be downloaded to the Mobile Switching Center/Visitor Location Register together the rest of the subscription information when the mobile subscriber is roaming.

**26 Claims, 7 Drawing Sheets**

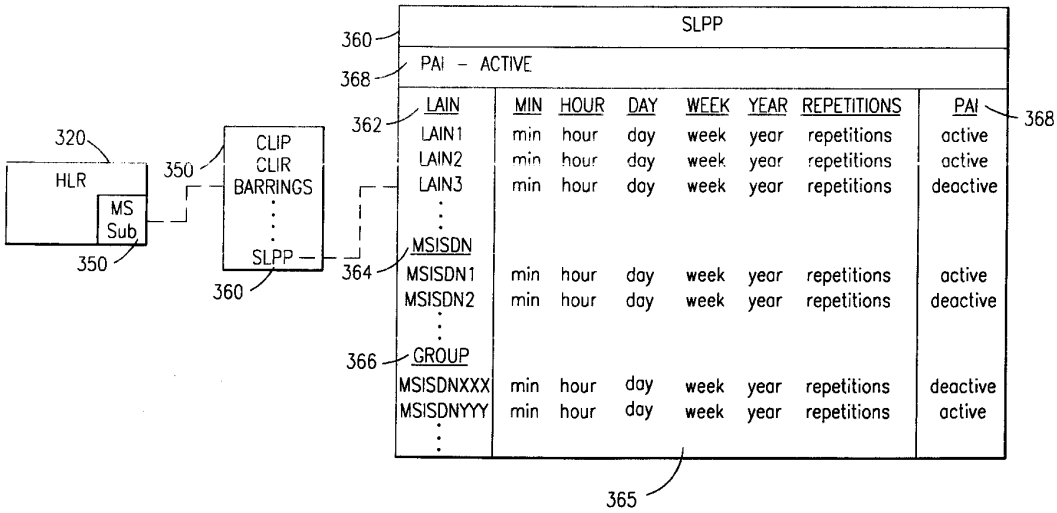

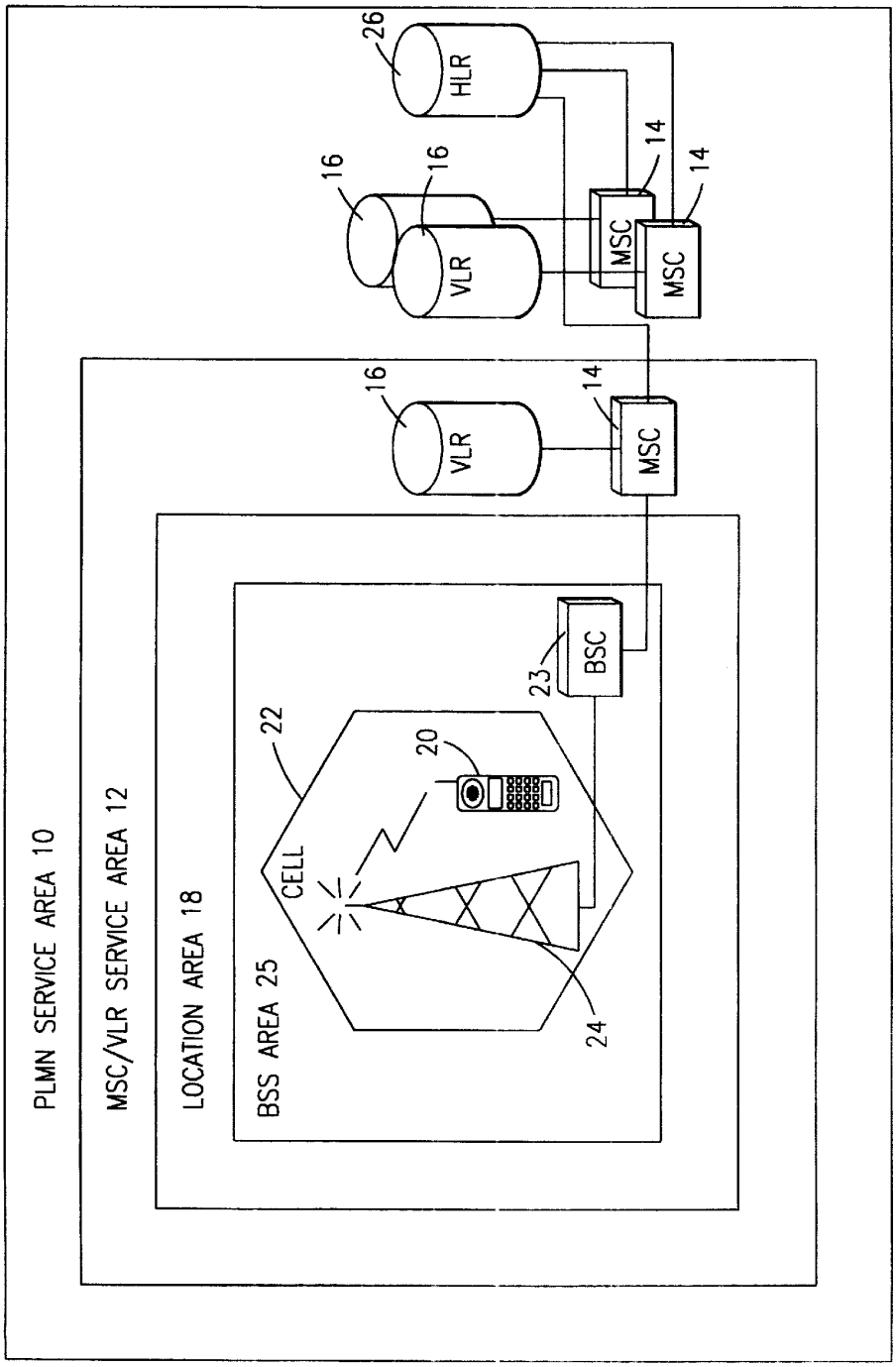
PLMN SERVICE AREA 10
MSC/VLR SERVICE AREA 12
LOCATION AREA 18
BSS AREA 25
CELL
22
20
24
23
BSC
16
VLR
14
MSC
16
VLR
16
VLR
26
HLR
14
MSC
14
MSC

FIG. 1

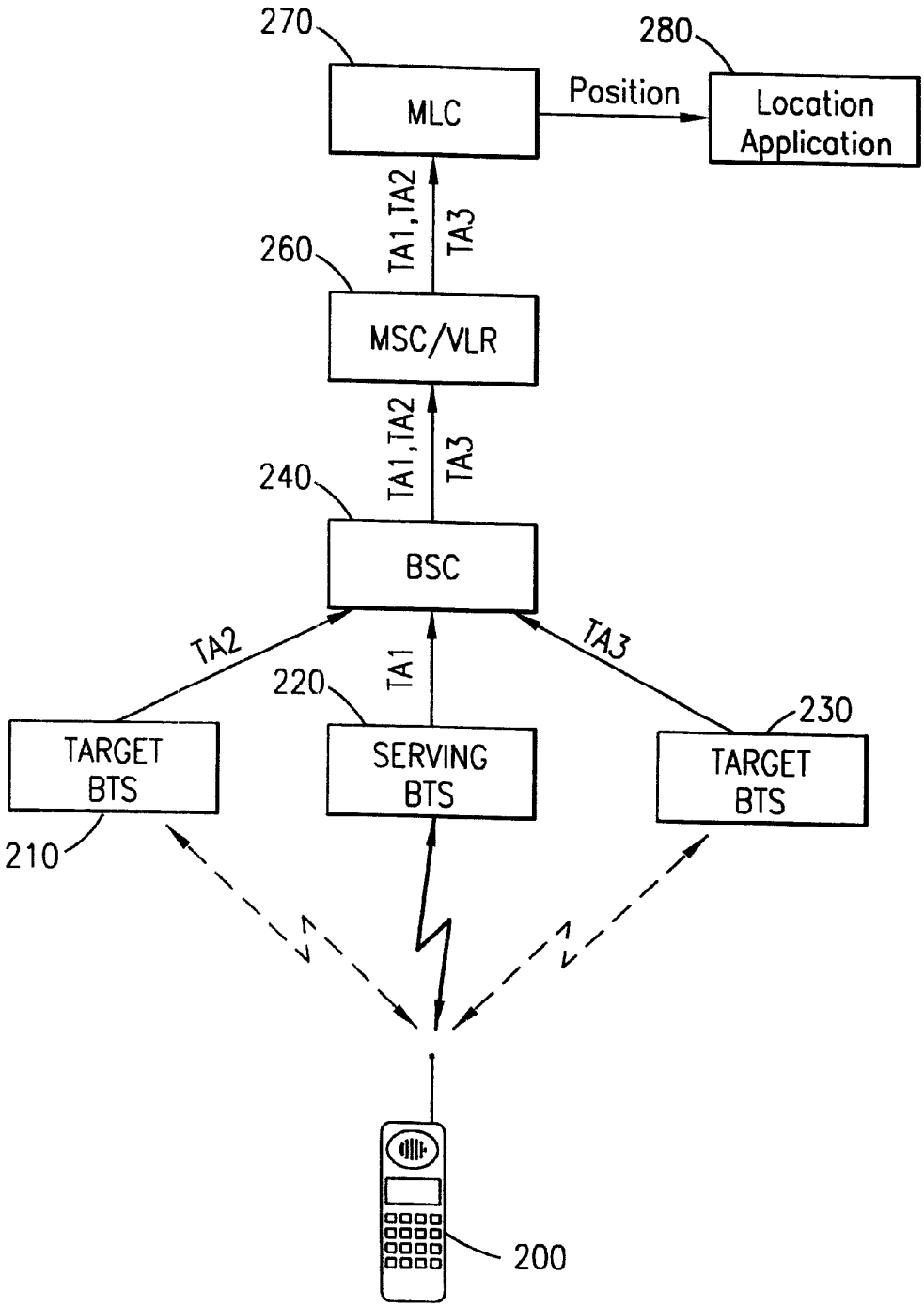
270
MLC
Position
280
Location Application
TA1,TA2
TA3
260
MSC/VLR
TA1,TA2
TA3
240
BSC
TA2
TA1
TA3
220
230
TARGET BTS
SERVING BTS
TARGET BTS
210
200

FIG. 2

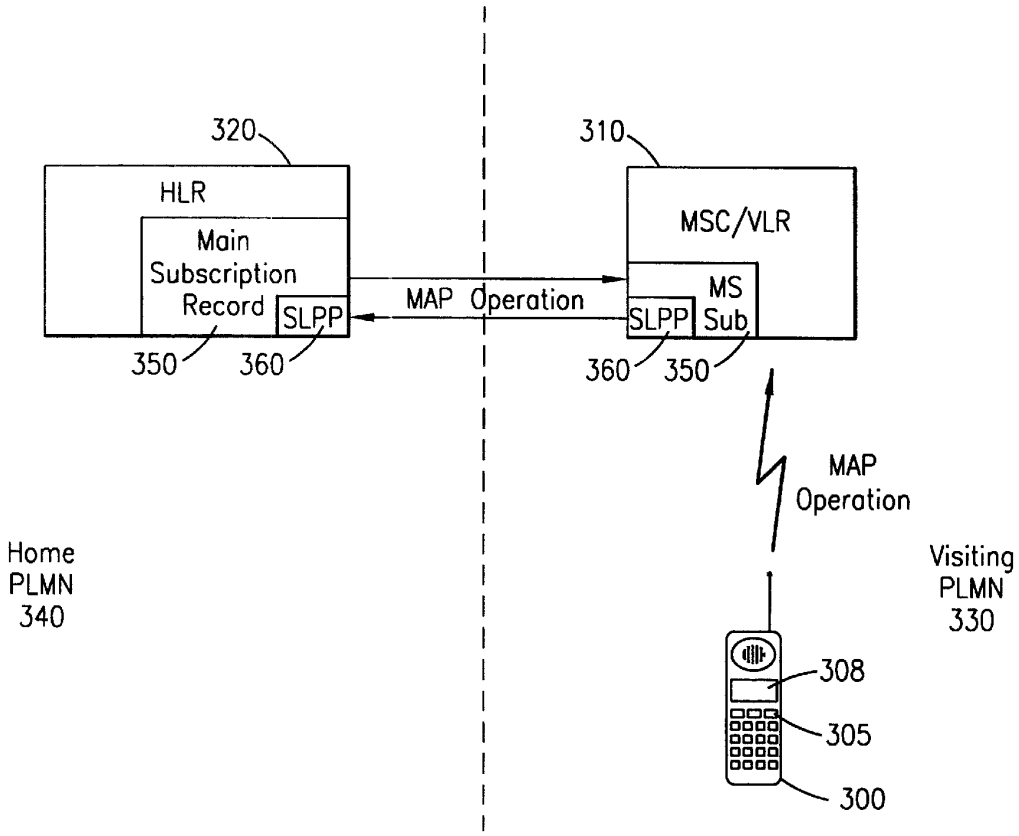
320
HLR
Main
Subscription
Record
SLPP
350
360
MAP Operation
310
MSC/VLR
MS
Sub
SLPP
360
350
MAP
Operation
Home
PLMN
340
Visiting
PLMN
330
308
305
300

*FIG. 3*

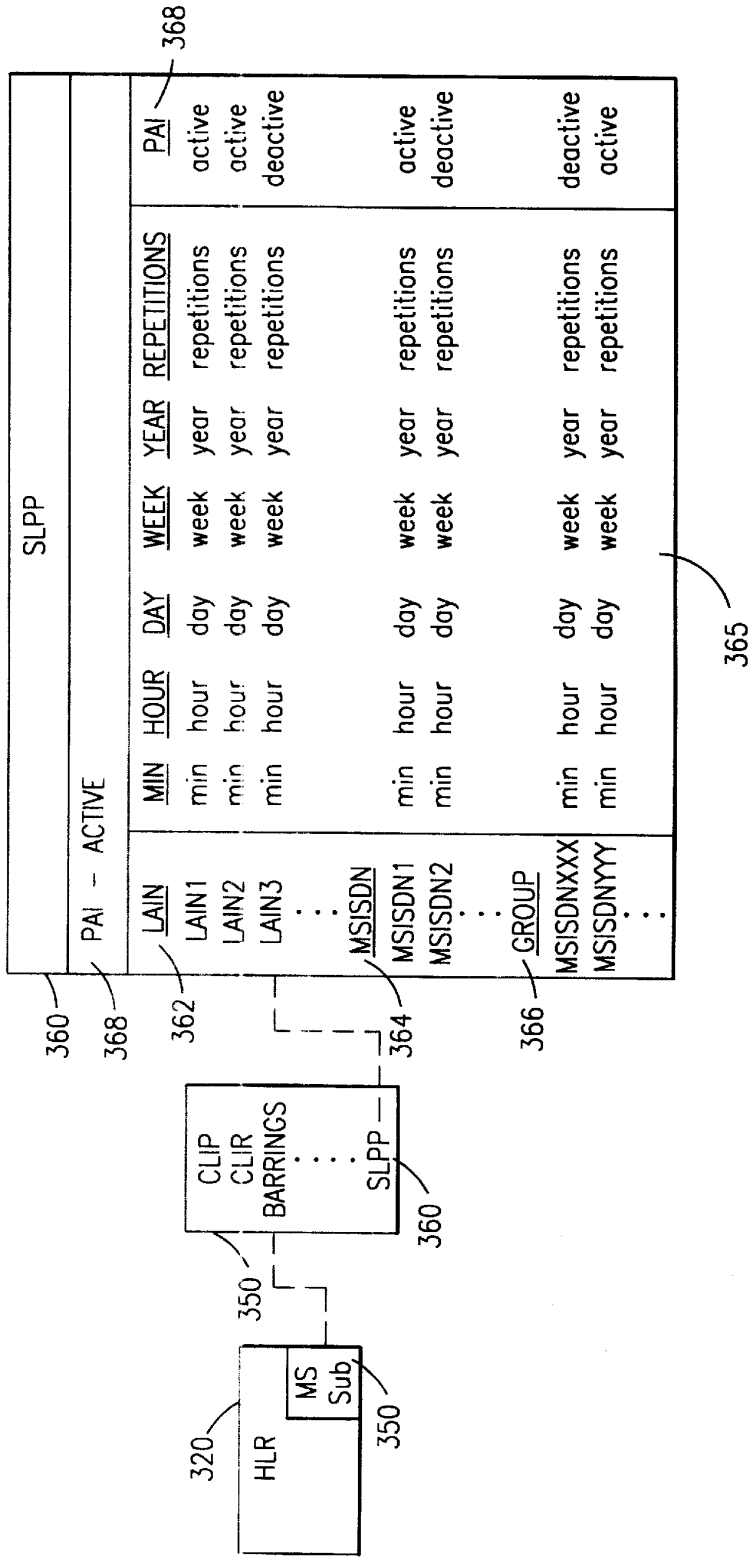
SLPP
PAI - ACTIVE
LAIN
LAIN1
LAIN2
LAIN3
MSISDN
MSISDN1
MSISDN2
GROUP
MSISDNXXX
MSISDNYYY
MIN
min
HOUR
hour
DAY
day
WEEK
week
YEAR
year
REPETITIONS
repetitions
PAI
active
deactive
CLIP
CLIR
BARRINGS
SLPP
HLR
MS
Sub
360
368
362
364
366
365
350
320

FIG. 4

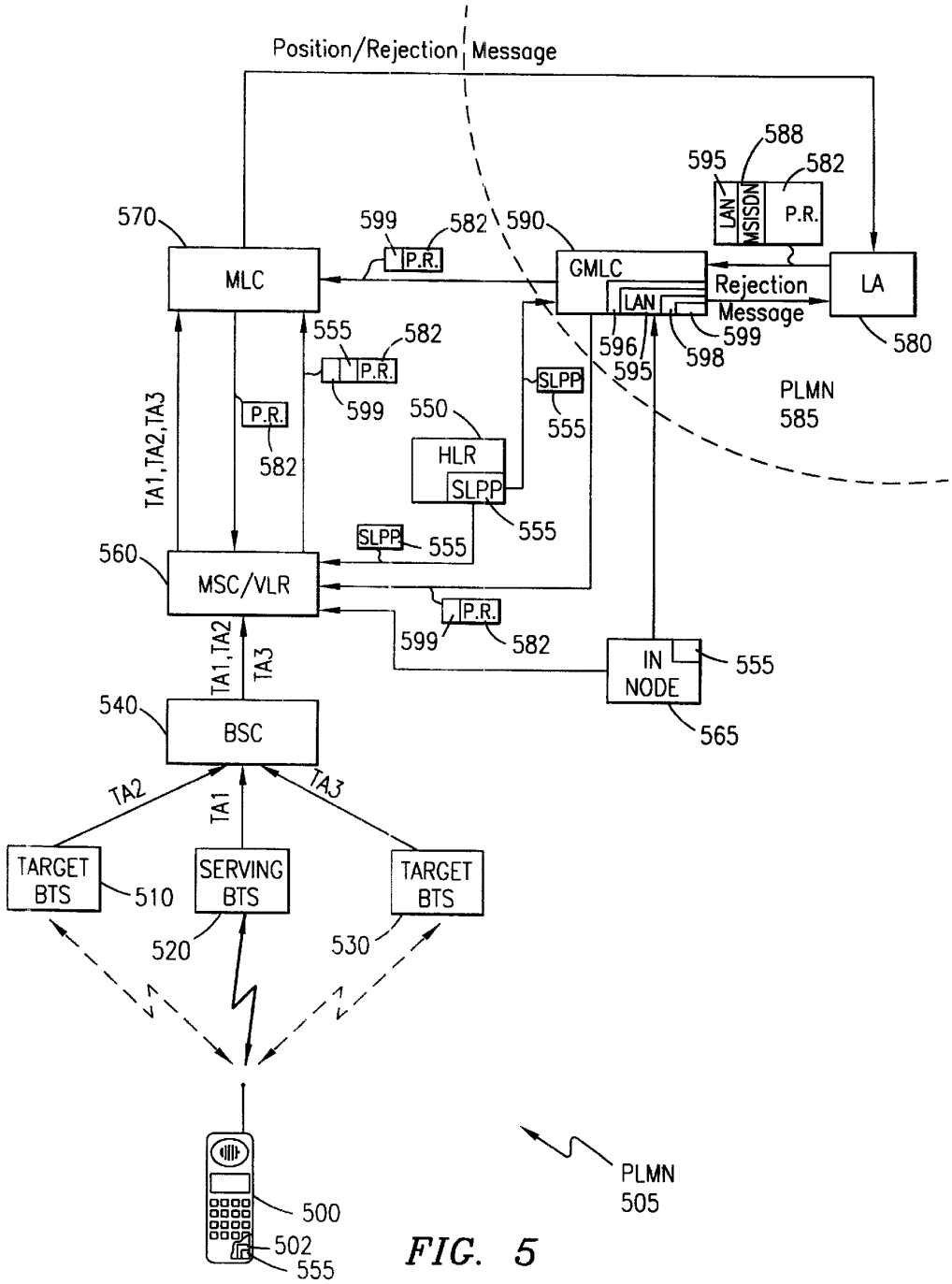
Position/Rejection Message
588
595
582
LAN
MSISDN
P.R.
570
599
582
590
MLC
P.R.
GMLC
LA
Rejection
Message
LAN
555
582
P.R.
599
596
595
598
599
580
SLPP
PLMN
585
P.R.
550
555
TA1,TA2,TA3
582
HLR
SLPP
555
SLPP
555
560
MSC/VLR
P.R.
599
582
TA1,TA2
TA3
IN
NODE
555
540
BSC
565
TA2
TA1
TA3
TARGET
BTS
510
SERVING
BTS
TARGET
BTS
520
530
PLMN
505
500
502
555

FIG. 5

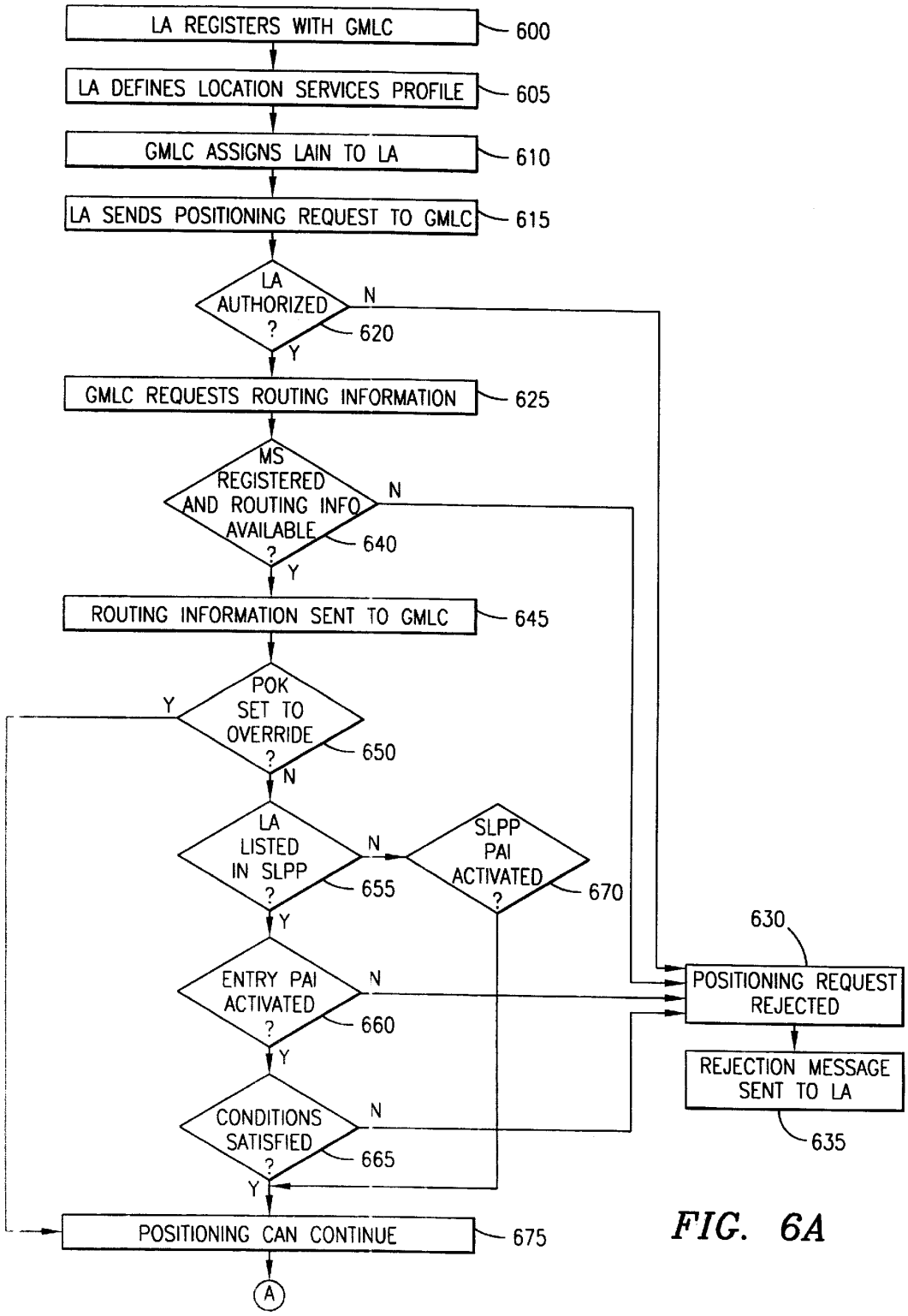
LA REGISTERS WITH GMLC
600
LA DEFINES LOCATION SERVICES PROFILE
605
GMLC ASSIGNS LAIN TO LA
610
LA SENDS POSITIONING REQUEST TO GMLC
615
LA AUTHORIZED ?
620
N
Y
GMLC REQUESTS ROUTING INFORMATION
625
MS REGISTERED AND ROUTING INFO AVAILABLE ?
640
N
Y
ROUTING INFORMATION SENT TO GMLC
645
POK SET TO OVERRIDE ?
650
Y
N
LA LISTED IN SLPP ?
655
N
SLPP PAI ACTIVATED ?
670
Y
ENTRY PAI ACTIVATED ?
660
N
Y
CONDITIONS SATISFIED ?
665
N
Y
POSITIONING CAN CONTINUE
675
A
630
POSITIONING REQUEST REJECTED
REJECTION MESSAGE SENT TO LA
635

FIG. 6A

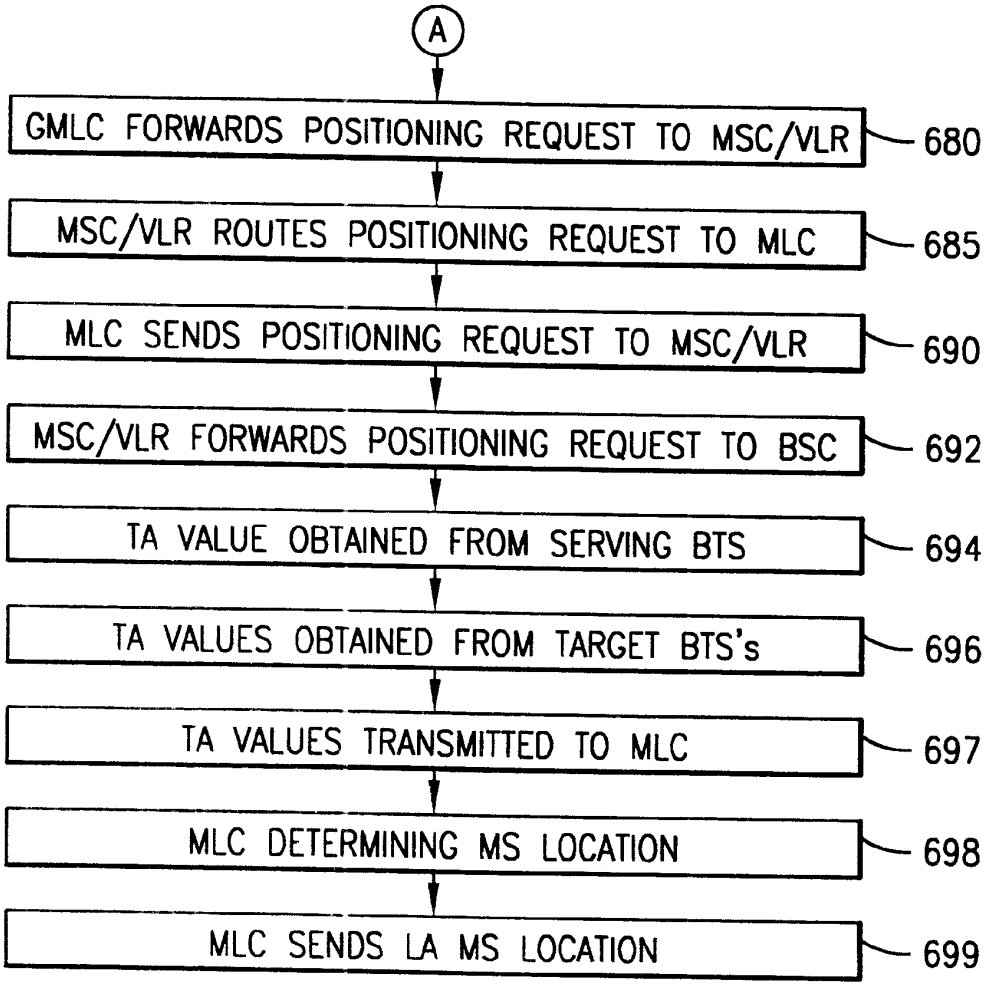
A
GMLC FORWARDS POSITIONING REQUEST TO MSC/VLR
680
MSC/VLR ROUTES POSITIONING REQUEST TO MLC
685
MLC SENDS POSITIONING REQUEST TO MSC/VLR
690
MSC/VLR FORWARDS POSITIONING REQUEST TO BSC
692
TA VALUE OBTAINED FROM SERVING BTS
694
TA VALUES OBTAINED FROM TARGET BTS's
696
TA VALUES TRANSMITTED TO MLC
697
MLC DETERMINING MS LOCATION
698
MLC SENDS LA MS LOCATION
699

*FIG. 6B*

# SYSTEM AND METHOD FOR DEFINING A SUBSCRIBER LOCATION PRIVACY PROFILE

## BACKGROUND OF THE PRESENT INVENTION

1. Field of the Invention

The present invention relates generally to telecommunications systems and methods for determining the location of a mobile terminal within a cellular network, and specifically for allowing mobile subscribers to define a privacy profile for positioning.

2. Background and Objects of the Present Invention

Cellular telecommunications is one of the fastest growing and most demanding telecommunications applications ever. Today it represents a large and continuously increasing percentage of all new telephone subscriptions around the world. A standardization group, European Telecommunications Standards Institute (ETSI), was established in 1982 to formulate the specifications for the Global System for Mobile Communication (GSM) digital mobile cellular radio system.

With reference now to FIG. **1** of the drawings, there is illustrated a GSM Public Land Mobile Network (PLMN), such as cellular network **10**, which in turn is composed of a plurality of areas **12**, each with a Mobile Switching Center (MSC) **14** and an integrated Visitor Location Register (VLR) **16** therein. The MSC/VLR areas **12**, in turn, include a plurality of Location Areas (LA) **18**, which are defined as that part of a given MSC/VLR area **12** in which a mobile station (MS) (terminal) **20** may move freely without having to send update location information to the MSC/VLR area **12** that controls the LA **18**. Each Location Area **18** is divided into a number of cells **22**. Mobile Station (MS) **20** is the physical equipment, e.g., a car phone or other portable phone, used by mobile subscribers to communicate with the cellular network **10**, each other, and users outside the subscribed network, both wireline and wireless.

The MSC **14** is in communication with at least one Base Station Controller (BSC) **23**, which, in turn, is in contact with at least one Base Transceiver Station (BTS) **24**. The BTS is the physical equipment, illustrated for simplicity as a radio tower, that provides radio coverage to the cell **22** for which it is responsible. It should be understood that the BSC **23** may be connected to several BTS's **24**, and may be implemented as a stand-alone node or integrated with the MSC **14**. In either event, the BSC **23** and BTS **24** components, as a whole, are generally referred to as a Base Station System (BSS) **25**.

With further reference to FIG. **1**, the PLMN Service Area or cellular network **10** includes a Home Location Register (HLR) **26**, which is a database maintaining all subscriber information, e.g., user profiles, current location information, International Mobile Subscriber Identity (IMSI) numbers, and other administrative information, for subscribers registered within that PLMN **10**. The HLR **26** may be co-located with a given MSC **14**, integrated with the MSC **14**, or alternatively can service multiple MSCs **14**, the latter of which is illustrated in FIG. **1**.

The VLR **16** is a database containing information about all of the MS's **20** currently located within the MSC/VLR area **12**. If an MS **20** roams into a new MSC/VLR area **12**, the VLR **16** connected to that MSC **14** requests data about that MS **20** from the HLR database **26** (simultaneously informing the HLR **26** about the current location of the MS **20**). Accordingly, if the user of the MS **20** then wants to make a call, the local VLR **16** will have the requisite identification information without having to reinterrogate the HLR **26**. In the aforedescribed manner, the VLR and HLR databases **16** and **26**, respectively, contain various subscriber information associated with a given MS **20**.



Determining the geographical position of an MS **20** within a cellular network **10** has recently become important for a wide range of applications. For example, positioning services may be used by transport and taxi companies to determine the location of their vehicles. In addition, for emergency calls, e.g., 911 calls, the exact location of the mobile terminal **20** may be extremely important to the outcome of the emergency situation. Furthermore, positioning services can be used to determine the location of a stolen car, for the detection of home zone calls, which are charged at a lower rate, for the detection of hot spots for micro cells, or for the subscriber to determine, for example, the nearest gas station, restaurant, or hospital, e.g., Where am I service.

As can be seen in FIG. **2** of the drawings, upon a network positioning request, the Base Station System (BSS) (**220** and **240**) serving the MS **200** to be positioned generates positioning data, which is delivered to the MSC **260**. This positioning data is then forwarded to a Mobile Location Center (MLC) **270** for calculation of the geographical location of the MS **200**. The location of the MS **200** can then be sent to a Location Application (LA) **280** that requested the positioning. Alternatively, the requesting LA **280** could be located within the MS **200** itself, within the MSC/VLR **260** or could be an external node, such as an Intelligent Network (IN) node.

In order to accurately determine the location of the MS **200**, positioning data from three or more separate BTS's (**210**, **220**, and **230**) is required. This positioning data for GSM systems can include, for example, a Timing Advance (TA) value, which corresponds to the amount of time in advance that the MS **200** must send a message in order for the BTS **220** to receive it in the time slot allocated to that MS **200**. When a message is sent from the MS **200** to the BTS **220**, there is a propagation delay, which depends upon the distance between the MS **200** and the BTS **220**. TA values are expressed in bit periods, and can range from 0 to 63, with each bit period corresponding to approximately 550 meters between the MS **200** and the BTS **220**.

Once a TA value is determined for one BTS **220**, the distance between the MS **200** and that particular BTS **220** is known, but the actual location is not. If, for example, the TA value equals one, the MS **200** could be anywhere along a radius of 550 meters. Two TA values from two BTSs, for example, BTSs **210** and **220**, provide two possible points that the MS **200** could be located (where the two radiuses intersect). However, with three TA values from three BTSs, e.g., BTSs **210**, **220**, and **230**, the location of the MS **200** can be determined with a certain degree of accuracy. Using a triangulation algorithm, with knowledge of the three TA values and site location data associated with each BTS (**210**, **220**, and **230**), the position of the MS **200** can be determined (with certain accuracy) by the MLC **270**.

It should be understood, however, that any estimate of time, distance, or angle for any cellular system **205** can be used, instead of the TA value discussed herein. For example, the MS **200** can have a Global Positioning System (GPS) receiver built into it, which is used to determine the location of the MS **200**. In addition, the MS **200** can collect positioning data based on the Observed Time Difference (OTD) between the time a BTS **220** sends out a signal and the time

the MS **200** receives the signal. This time difference information can be sent to the MLC **270** for calculation of the location of the MS **200**. Alternatively, the MS **200**, with knowledge of the location of the BTS **220**, can determine its location.

Existing technology can provide subscribers with the ability to prevent LAs **280** from positioning them in order to protect their privacy. However, in some cases, it is necessary for the specific LA **280** to position the MS **200** regardless of the privacy settings of the particular subscriber. For example, when the LA **280** is an emergency center or a law enforcement agency, the community interest in positioning the MS **200** outweighs the subscriber's need for privacy. In this case, the privacy settings of the subscriber will need to be overridden in order for the emergency center or law enforcement agency to position the MS **200**. In addition, LAs **280** may need to have the ability to override other location settings established by the subscriber. Thus, a Privacy Override Key (POK) (not shown) can be provided by network operators to allow an LA **280** to override the subscriber's privacy settings in order to obtain the location of the subscriber with a high degree of accuracy.

The POK is typically assigned on an individual LA **280** basis by a Gateway Mobile Location Center (GMLC) (not shown) during the registration of the LA **280** at the GMLC of the PLMN **205** that the LA **280** is located in. Normally, commercial-type LA's **280** are not allowed to override the subscriber's privacy settings, e.g., the assigned value of the POK is "not override". However, certain specific LA's **280**, such as law enforcement or E-**911**, which must be capable of positioning a subscriber regardless of the subscriber's settings, can be assigned a POK with the value "allowed to override subscriber's privacy settings." It should be noted that when the subscriber is roaming, law enforcement LA's **280** will need, in addition to the POK with the value "allowed to override subscriber's privacy settings," a court order in order to be able to override the MS **200** privacy settings.

Even though a mobile subscriber has established privacy settings, the mobile subscriber may want to allow certain other subscribers or LAs **280** to have the ability to position the mobile subscriber regardless of the mobile subscriber's privacy settings. Such other subscribers could be, for example, the mobile subscriber's family or member(s) of a particular group, such as, e.g., in the case where the subscriber is an employee of a taxi company, the operations center or the mobile subscriber's manager. For those cases, the mobile subscriber may also want to put limits on the ability of those other subscribers or LA's **280** to position him. For example, the mobile subscriber may only want those LA's **280** to be able to position the mobile subscriber during certain hours or minutes of the day, certain days of the week or certain days, weeks or months of the year. In addition, the mobile subscriber may want to limit the number of allowable repetitive positionings by a particular subscriber or LA **280** per hour, day, week, or year.

It is, therefore, an object of the present invention to allow a mobile subscriber to define a location privacy profile, which contains a list of subscribers able to position the subscriber regardless of the mobile subscriber's privacy settings.

It is a further object of the present invention to permit a mobile subscriber to place limits on the ability of the subscribers within the location privacy profile to position the mobile subscriber.

It is still a further object of the present invention to download the mobile subscribers location privacy profile to the an MSC/VLR when the mobile subscriber is roaming within the area served by that MSC/VLR.

## SUMMARY OF THE INVENTION

The present invention is directed to telecommunications systems and methods for allowing each mobile subscriber that has subscribed to location services to define a Subscriber Location Privacy Profile (SLPP), which contains a list of preferred subscribers or LA's that have permission to position the mobile subscriber. The SLPP can also define the conditions under which each of the preferred subscribers can position the mobile subscriber. For example, the mobile subscriber can limit the positioning by a particular preferred subscriber or LA to only certain hours of the day, certain days of the week and/or certain weeks of the year, and can limit the number of times that particular preferred subscriber or LA can request positioning of the mobile subscriber during those allowed times. The SLPP can preferably be connected to the mobile subscriber's main subscription record in the HLR and can be downloaded to the MSC/VLR together the rest of the subscription information when the MS is roaming within the area served by that MSC/VLR. In addition, in preferred embodiments, the mobile subscriber can define, activate, deactivate and delete the SLPP from the MS with a new family of MAP operations, which is similar in handling to Call Independent Supplementary Services (CISS) used within GSM systems.

## BRIEF DESCRIPTION OF THE DRAWINGS

The disclosed invention will be described with reference to the accompanying drawings, which show important sample embodiments of the invention and which are incorporated in the specification hereof by reference, wherein:

FIG. **1** is a block diagram of a conventional wireless telecommunications system;

FIG. **2** illustrates a sample positioning of a mobile terminal in which positioning data is acquired by a mobile location center to determine the location of the mobile terminal within a cellular network;

FIG. **3** is a block diagram showing the storage of a Subscriber Location Privacy Profile (SLPP) for a particular mobile subscriber within the mobile subscriber's Home Location Register in accordance with preferred embodiments of the present invention;

FIG. **4** is a sample structure of an SLPP for a mobile subscriber within the HLR showing various subscribers and Location Applications and the conditions under which each can position the mobile subscriber;

FIG. **5** is a block diagram depicting the positioning of a mobile terminal within a cellular network depending upon the values of a Positioning Override Keys associated with a requesting Location Application and the entries within the SLPP of the mobile terminal in accordance with preferred embodiments of the present invention; and

FIGS. **6**A and **6**B demonstrate steps in a sample positioning of a mobile terminal in accordance with preferred embodiments of the present invention.

## DETAILED DESCRIPTION OF THE PRESENTLY PREFERRED EXEMPLARY EMBODIMENTS

The numerous innovative teachings of the present application will be described with particular reference to the presently preferred exemplary embodiments. However, it should be understood that this class of embodiments pro-

vides only a few examples of the many advantageous uses of the innovative teachings herein. In general, statements made in the specification of the present application do not necessarily delimit any of the various claimed inventions. Moreover, some statements may apply to some inventive features but not to others.

Location Applications (LAs) currently have the ability to override a mobile subscriber's privacy settings by establishing a Privacy Override Key (POK) when the LA first registers with a Gateway Mobile Location Center (GMLC) serving the area that the LA is located in. Similarly, in some situations, mobile subscribers themselves would like to be able to override their privacy settings to allow specific subscribers or LA's to position them. For example, the mobile subscriber's family, boss or member(s) of a group of mobile subscribers may need to position the mobile subscriber regardless of the mobile subscribers privacy settings. This may be especially useful in the case where the mobile subscriber is an employee of a taxi company and the operations center or manager needs to obtain information regarding the mobile subscribers location.

With reference now to FIG. **3** of the drawings, mobile subscriber's that have subscribed to location services can be assigned a Subscriber Location Privacy Profile (SLPP) **360**, which defines a preferred list of additional subscribers or LA's to which the mobile subscriber gives permission to position the mobile subscriber. The SLPP **360** can preferably be connected to the main subscription record **350** in the mobile subscriber's Home Location Register (HLR) **320** in the mobile subscriber's home PLMN **340** such that the SLPP **360** can be downloaded to a Mobile Switching Center/Visitor Location Register (MSC/VLR) **310** when the Mobile Station (MS) **300** of the mobile subscriber roams into the PLMN **330** associated with the serving MSC/VLR **310**.

FIG. **4** illustrates a sample structure of an SLPP **360** of a particular mobile subscriber in the mobile subscriber's HLR **320** which contains a list of Location Application Identifier Numbers (LAINs) **362** for particular LA's and subscribers **364**, e.g., Mobile Station Integrated Service Digital Network Numbers (MSISDNs), and the defined conditions **365** under which the requesting LAINs **362** and MSISDN's **364** are allowed to position the mobile subscriber, such as all day, certain hours or minutes of the day, certain days of the week or certain days, weeks or months of the year. In addition, the SLPP **360** can contain group information **366**, such as an MSISDN number along with several additional digits, e.g., xxx or yyy, which are used for identifying the individual group members. It should be understood that the mobile subscriber can define the SLPP **360** so that certain LAINs **362**, MSISDNs **364** or groups **366** are given permission by the mobile subscriber to always position the mobile subscriber or always position the mobile subscriber during specific times, which can be practical for the situation where an employee of a taxi company is given an MS **300** and the SLPP **360** is defined to always allow the operations center to position the employee's MS **300** during working hours. In addition, the SLPP **360** can define the number of repetitive positionings allowed by a particular LAIN **362**, MSISDN **364** or group **366** per hour, day, week or year.

In preferred embodiments of the present invention, the mobile subscriber can define, activate, deactivate and/or delete the SLPP **360** or entries **362**, **364** or **366** within the SLPP **360** from the MS **300** by using a new family of Mobile Application Part (MAP) protocol operations similar to the format of Call Independent Supplementary Services (CISS) of GSM systems. The mobile subscriber can enter various SLPP **360** features and instructions on the MS **300** by using function keys **305** and menu display **308** on the MS **300**. These features and instructions can then be sent to the HLR **320** via the serving MSC/VLR **310** in a message in the format of the new MAP operations.

In addition, a Positioning Allowed Indicator (PAI) switch **368** can be provided within the SLPP **360** in the HLR **320** to allow the mobile subscriber to easily activate or deactivate the SLPP **360** or entries **362**, **364** or **366** within the SLPP **360**. For example, after the mobile subscriber has defined the SLPP **360** for a specific LAIN **362**, MSISDN **364** or group **366**, the mobile subscriber can activate or deactivate the SLPP **360** for that LAIN **362**, MSISDN **364** or group **366** by sending a message to the HLR **320** to turn the PAI **368** for that LAIN **362**, MSISDN **364** or group **366** on or off. Therefore, the mobile subscriber can prevent that particular LAIN **362**, MSISDN **364** or group **366** from performing a positioning of the MS **300** of the mobile subscriber without deleting the LAIN **362**, MSISDN **364** or group **366** from the SLPP **360**. Thereafter, when the mobile subscriber decides that the LAIN **362**, MSISDN **364** or group **366** can again position him, the mobile subscriber need only activate the PAI **368** for that LAIN **362**, MSISDN **364** or group **366** instead of having to re-define the SLPP **360**.

With reference now to FIG. **5** of the drawings, which will be described in connection with the steps listed in FIGS. **6**A and **6**B of the drawings, prior to an LA **580** sending a positioning request **582** to the GMLC **390** (step **615**), the LA **580** must first register with the GMLC **590** (step **600**) and define within, for example, a database **596** within the GMLC **590**, its location services profile **598** (step **605**), e.g., all of the relevant service parameters specific to that LA **580**. One such service parameter **598** that the LA **580** can define is whether the LA **580** has the authority to override subscriber limitations and/or system default behavior when positioning. Such service parameters **598** are called Location Override Keys (LOKs) (not shown). One such LOK is a Privacy Override Key (POK) **599**. The POK **599** can either have the value "override" or "not override". In addition, each LA **580** shall be associated with a particular value of POK **599**, with the default setting being "not override". At registration, a POK **599** can be accompanied by one or more additional parameters (not shown) that carry additional information related to the POK **599**. This information can be used to further define the override capabilities. For example, a positioning method parameter can be included which defines the particular positioning method to be used when positioning.

Once the LA **580** has defined the service parameters **598** specific to that LA **580** (step **605**), the GMLC **590** assigns an LAIN **595** (step **610**), which identifies the particular LA **580** and the associated service parameters **598**. Thereafter, the requesting LA **580** can send its LAIN **595** in a positioning request **582**, specifying the particular MSISDN **588** associated with the particular MS **500** to be positioned (step **615**) to the GMLC **590**. However, if the LA **580** is an emergency center, the emergency center can define its location services **598** such that positioning can be performed on any MS **500** that dials "911", regardless of the MSISDN **588** or whether the particular MS **500** has an MSISDN **588** (in the case where service for the MS **500** has not yet been activated). In that case, when an MS **500** dials "911", the MSC/VLR **560** serving an area **505** that the MS **500** is located in triggers the positioning request in a serving Mobile Location Center (MLC) **570**, and positioning of the MS **500** is performed. Thus, the emergency call can be routed to the appropriate Public Safety Answering Point (PSAP) (not shown) and

emergency services can be dispatched to the current location of the MS **500**.

When the GMLC **590** receives the positioning request **582** (step **615**), the GMLC **590** analyzes the LAIN **595** to determine if the LA **580** is authorized to request positioning (step **620**), e.g., that the LAIN **590** is registered in the GMLC **590**. If the LA **580** is authorized to position the requested MS(s) **500** (step **620**), the GMLC **590** can send a request for routing information (step **625**), e.g., the address of the MSC/VLR **560** serving the PLMN **505** that the MS **500** is currently located in and positioning subscription information (SLPP) **555** for the MS **500**, to the MS's HLR **550**, using the MS's **500** directory number as a global title. The signaling network, e.g., the Signaling System #7 (SS7) network (not shown), can perform a global title translation on the MSISDN **588** and route the request to the appropriate HLR **550** for the MS **500**. It should be noted that if, however, the LA **580** is not authorized to request positioning of the MS **500** (step **620**), the positioning request **582** is rejected by the GMLC **590** (step **630**) and a rejection message is sent to the LA **580** (step **635**).

The HLR **550** then checks its records to confirm that the MS **500** is registered in the HLR **550**, and that routing information for that MS **500** is available (step **640**). If the MS **500** is not registered in the HLR **550** or the routing information is not available (step **640**), the routing information request is rejected by the HLR **550** (step **630**) and the GMLC **590** sends a rejection message to the LA **580** (step **635**). However, if the MS **500** is registered in the HLR **550** and routing information is available (step **640**), the routing information, e.g., the serving MSC/VLR **560** address, together with the positioning subscription information **555**, is sent to the GMLC **590** (step **645**).

The GMLC **590** then checks the service parameters **598** defined by the LA **580** (step **650**). For example, if one of the LOKs is a POK **599**, which, as stated above, can be used by the GMLC **590** to determine whether the privacy settings of the subscriber to be positioned should be overridden for the positioning request **582**, the GMLC **590** then determines the value of the POK **599**: "override" or "not override". If the value is set to "override" (step **650**), the GMLC **590** does not check the privacy settings (SLPP) **555** of the MS **500** (step **655**), and the positioning request **582** along with the POK **599** of "override" is forwarded to the MSC/VLR **560** (step **680**). For example, if the LA **580** is an emergency center or a law enforcement agency, the LA **580** can define its location services profile **598** (step **605**) such that positioning can be performed regardless of the privacy settings **555** of the subscriber being positioned. The particular LA's **580** allowed to override privacy settings **555** and the conditions for doing so can be established by the network is operator or local and/or national government regulations.

If, however, the POK **599** is set to "not override" (step **650**), the GMLC **590** must then verify that the MS **500** to be positioned by the LA **580** allows positioning to be performed (step **655**), e.g., by checking the positioning subscription information (SLPP) **555**, sent by the HLR **550**. The GMLC **590** checks whether the LA **580** or MSISDN requesting location information is listed within the SLPP **555** (step **655**). If the LA **580** is listed in the SLPP **555** (step **655**), and the conditions for that LA **580** are activated, e.g., the PAI for that LA entry is activated (step **660**), then the conditions can be checked against the clock of the MSC/VLR **560** (step **665**). If the conditions are satisfied (step **665**), e.g., the MSC/VLR **560** clock matches the allowable time defined for the particular LA **580** and the LA **580** is not constrained by an excess of periodic requests within the allowable time, the GMLC **590** continues with the positioning of the MS **500** (step **675**). If the conditions are not satisfied (step **665**) or if the PAI for that LA **580** entry has been deactivated (step **660**), the positioning request **582** is rejected (step **630**) and the GMLC **590** sends a rejection message to the requesting LA **580** indicating that the conditions for positioning have not been met (step **635**).

If, however, the LA **580** is not listed in the SLPP **555** or if the SLPP **555** contains no entries (step **655**), the PAI for the entire SLPP **555** then has a generic behavior, which means that if the PAI is activated (step **670**), then as shown in FIG. **6**B of the drawings, any MSISDN or LA **580** can position the MS **500** (step **675**). Otherwise, no MSISDN or LA **580** can position the MS **500** (steps **630** and **635**) except for the LAs **580** with override capabilities, as stated hereinbefore.

Alternatively, the serving MSC/VLR **560** or serving MLC **570** can check the SLPP **555** of the MS **500**. The SLPP **555** can be downloaded to the serving MSC/VLR **560** together the rest of the mobile subscriber's subscription information with the existing Mobile Application Part (MAP) operation INSERT_SUBSCRIBER_DATA or with the existing MAP operation RESTORE_DATA. The serving MSC/VLR **560** can then transfer the SLPP **555** to the serving MLC **570** if the serving MLC **570** normally performs the check. In addition, if the MSC/VLR **560** or MLC **570** normally performs the check, the POK **599** for privacy override indication is passed onto the MSC/VLR **560** or MLC **570** from the GMLC **590** along with the positioning request.

If the GMLC **590** determines that positioning can continue (step **675**), the GMLC **590** can then send the positioning request to the serving MSC/VLR **560** (step **680**), using the MSC/VLR **560** address. Thereafter, the serving MSC/VLR **560** can route the positioning request to the MLC **570** serving the PLMN **505** that the MS **500** is located in (step **685**). It should be understood that the MLC **570** can be co-located with the serving MSC/VLR **560** or can be a separate node, the latter being illustrated.

Alternatively, after the GMLC **590** confirms that the MS **500** allows positioning to be performed (step **675**), the GMLC **590** can derive, from the MSC/VLR **560** address, the address of the MLC **570** in the serving PLMN **505**, using, for example, a look-up database (not shown). Thereafter, the positioning request **582** can be routed directly to the MLC **570** in the serving PLMN **505** (step **685**).

It should be noted that if the serving MSC/VLR **560** and MLC **570** are located within a PLMN **505** different from the PLMN **585** that the GMLC **590** is located in, which is shown in FIG. **5**, then, if the POK **599** is sent by the GMLC **590** with the value "override", the serving MLC **570** can either reject the positioning request **582** (step **630**) and send a rejection message to the LA **580** (step **635**), or convert the POK **599** to a value of "not override". If the POK **599** is converted to "not override," the serving MLC **570** must then check the SLPP **555** of the subscriber (step **655**). If the subscriber's SLPP **555** allows positioning, positioning will continue (step **675**). However, if the subscriber's SLPP **555** does not allow positioning, the serving MLC **570** can reject the positioning request **582** (step **630**) and send a rejection message to the LA **580** (step **635**). This avoids jurisdictional conflicts between PLMNs (**505** and **585**) with respect to the ability of LA's **580** to override privacy settings **555**.

However, it should be understood that agreements between PLMN's (**505** and **585**) can state that POK **599** values of "override" will be accepted between the PLMN's (**505** and **585**). In addition, if the LA **580** is a law enforce-

ment agency, which has a court order allowing positioning, then the POK **599** can be accepted by the serving MLC **570** if a court order also exists at the serving MLC **570**. It should be understood that a POK **599** with the value "not override" will not be changed by the serving MLC **570** and positioning will then only occur if the subscriber's SLPP **555** allows it.

The positioning request can then be carried out by the MLC **570** sending the positioning request to the serving MSC/VLR **560** (step **690**), which can then forward the positioning request to a Base Station Controller (BSC) **540** (step **692**). If the MS **500** is in idle mode, the serving MSC/VLR **560** must page the MS **500** and setup a call to the MS **500** prior to forwarding the positioning request **582** to the BSC **540** (step **692**). This call does not activate the ringing tone on the MS **500**, and therefore, is not noticed by the MS **500**.

The originating BSC **540** then determines which Base Transceiver Station (BTS) **520** is currently serving the MS **500**, and obtains a Timing Advance (TA) value (TA**1**), or other positioning data, from this serving BTS **520** (step **694**), if possible. Thereafter, TA values are obtained from at least two target BTSs (**510** and **530**) (step **696**) by performing a positioning handover. If the serving BTS **520** does not support positioning, an additional target BTS (not shown) must be selected. It should be noted that other positioning methods can be used instead of obtaining TA values, as discussed herein. In addition, positioning of the MS **500** can be performed using more than three BTSs (**510**, **520**, and **530**).

The TA values (TA**2** and TA**3**) measured by the target BTS's (**510** and **530**) are then transmitted by the serving BSC **540** to the MLC **570** via the MSC/VLR **560**, together with the TA value TA**1** obtained from the serving BTS **520** (step **697**). The serving MLC **570** then determines the location of the MS **500** using the triangulation algorithm (step **698**). The MLC **570** then presents the geographical position of the MS **500** to the requesting MSISDN or LA (node) **580** (step **699**).

In alternative embodiments, the SLPP **555** can be defined and stored on a Subscriber Identity Module (SIM) card **502** within the MS **500** or within an external node, such as an Intelligent Network (IN) node **565**, in order to off-load the information from the network. In this situation, either the GMLC **590**, MLC **570** or serving MSC/VLR **560** can request the SLPP **555** from the MS **500** or the IN node when a positioning request **582** is received. Positioning can then continue as discussed above.

As will be recognized by those skilled in the art, the innovative concepts described in the present application can be modified and varied over a wide range of applications. Accordingly, the scope of patented subject matter should not be limited to any of the specific exemplary teachings discussed.

For example, it should be noted that the location services can be used by applications located-in or connected-to the subscriber's MS, by network applications or by external applications.

In addition, it should be understood that other positioning methods, instead of the Timing Advance positioning method discussed herein, can be used to determine the location of the mobile terminal. For example, such positioning methods can include: Time of Arrival, Angle of Arrival, Global Positioning System, Observed Time Difference, or Enhanced Observed Time Difference.

Furthermore, it should be understood that the positioning systems and methods disclosed herein can be utilized by any cellular network, including, but not limited to the Global System for Mobile Communications (GSM) network, the Personal Communications Systems (PCS) network, the AMPS network and the D-AMPS network.

What is claimed is:

**1**. A telecommunications system for allowing a mobile subscriber to selectively permit certain location applications to perform positioning of a mobile terminal associated with said mobile subscriber, each of said location applications having a separate identity associated therewith, said telecommunications system comprising:

a node for responding to a positioning request for said mobile terminal, said positioning request being initiated by a requesting location application, said positioning request including said identity of said requesting location application; and

a Subscriber Location Privacy Profile (SLPP) within said node, said SLPP being defined by said mobile subscriber and containing a list of location application identities allowed to position said mobile terminal, said SLPP enabling authorization of said positioning request when said identity of said requesting location application is within said list of location application identities.

**2**. The telecommunications system of claim **1**, further comprising a gateway mobile location center for receiving said positioning request, said gateway mobile location center being in communication with said node.

**3**. The telecommunications system of claim **2**, wherein said node is a home location register operatively connected with said gateway mobile location center, said home location register storing a subscriber profile for said mobile subscriber.

**4**. The telecommunications system of claim **3**, wherein said SLPP is connected with said subscriber profile, said home location register sending said SLPP to said gateway mobile location center.

**5**. The telecommunications system of claim **4**, further comprising a Mobile Switching Center/Visitor Location Register (MSC/VLR) in wireless communication with said mobile terminal and connected to said gateway mobile location center, said SLPP being sent from said home location register to said MSC/VLR, said gateway mobile location center forwarding said positioning request to said MSC/VLR, said MSC/VLR determining whether said identity of said requesting location application is within said list of location application identities.

**6**. The telecommunications system of claim **2**, wherein said node is a memory within said mobile terminal, said SLPP being sent from said mobile terminal to said gateway mobile location center when said positioning request is received.

**7**. The telecommunications system of claim **2**, wherein said node is an Intelligent Network node, said SLPP being sent from said mobile terminal to said gateway mobile location center when said positioning request is received.

**8**. The telecommunications system of claim **1**, wherein said list of location identities comprises a list of Location Application Identifier Numbers.

**9**. The telecommunications system of claim **1**, wherein said list of location application identities comprises a list of Mobile Station Integrated Service Digital Network numbers.

**10**. The telecommunications system of claim **1**, wherein each said location application identity within said list of location application identities has conditions associated therewith, said SLPP enabling authorization of said positioning request when said conditions associated with said identity of said requesting location application have been satisfied.

11. The telecommunications system of claim 10, wherein said conditions comprise at least one of allowable times for said requesting location application to send said positioning request and restrictions on the number of previous positioning requests allowed to be sent by said requesting location application within said allowable times.

12. The telecommunications system of claim 1, wherein each said location application identity within said list of location application identities has a Positioning Allowed Indicator (PAI) associated therewith, said SLPP enabling authorization of said positioning request when said PAI associated with said identity of said requesting location application is active.

13. The telecommunications system of claim 1, wherein said SLPP has a Positioning Allowed Indicator (PAI) associated therewith, said SLPP enabling authorization of said positioning request when said PAI is active and said identity of said requesting location application is within said list of location application identities.

14. The telecommunications system of claim 1, wherein said requesting location application has a privacy override key associated therewith, said SLPP enabling authorization of said positioning request when said identity of said requesting location application is within said list of location application identities and when said privacy override key is set to "not override."

15. The telecommunications system of claim 1, wherein said mobile subscriber can define, activate, deactivate or delete said SLPP using said mobile terminal.

16. The telecommunications system of claim 1, wherein said mobile subscriber can remove one or more identities of one or more respective ones of said location applications from said list of location application identities to prevent said respective location applications from positioning said mobile terminal without affecting the ability of remaining ones of said location applications remaining within said list of location application identities to position said mobile terminal.

17. A method for allowing a mobile subscriber to selectively permit certain location applications to perform positioning of a mobile terminal associated with said mobile subscriber, each of said location applications having a separate identity associated therewith, said method comprising the steps of:

defining, by said mobile subscriber, a Subscriber Location Privacy Profile (SLPP), said SLPP containing a list of location application identities allowed to position said mobile terminal;

receiving a positioning request for said mobile terminal from a requesting location application, said positioning request including said identity of said requesting location application; and

enabling authorization of said positioning request, by said SLPP, when said identity of said requesting location application is within said list of location application identities.

18. The method of claim 17, wherein said SLPP is stored within a home location register connected to a gateway mobile location center, said gateway mobile location center receiving said positioning request, said home location register storing a subscriber profile connected with said SLPP, and further comprising the step of:

sending said SLPP from said home location register to said gateway mobile location center.

19. The method of claim 17, wherein said step of enabling further includes the step of determining whether conditions associated with said identity of said requesting location application stored within said list of location application identities have been satisfied.

20. The method of claim 19, wherein said step of determining further comprises the step of determining at least one of allowable times for said requesting location application to send said positioning request and restrictions on the number of previous positioning requests allowed to be sent by said requesting location application within said allowable times.

21. The method of claim 17, wherein each said location application identity within said list of location application identities has a Positioning Allowed Indicator (PAI) associated therewith, said step of enabling further comprising the step of enabling authorization of said positioning request when said PAI associated with said requesting location application is active.

22. The method of claim 17, wherein said SLPP has a Positioning Allowed Indicator (PAI) associated therewith, said step of enabling further comprising the step of enabling authorization of said positioning request when said PAI is active and said identity of said requesting location application is within said list of location application identities.

23. The method of claim 17, further comprising the steps of:

sending said SLPP to said MSC/VLR;

forwarding said positioning request from said gateway mobile location center to a Mobile Switching Center/Visitor Location Register (MSC/VLR) in wireless communication with said mobile terminal; and

determining, by said MSC/VLR, whether said identity of said requesting location application is within said list of location application identities.

24. The method of claim 17, wherein said requesting location application has a privacy override key associated therewith, said step of enabling further comprising the step of enabling authorization of said positioning request when said identity of said requesting location application is within said list of location application identities and said privacy override key is set to "not override."

25. The method of claim 17, further comprising the step of:

removing one or more identities of one or more respective ones of said location applications from said list of location application identities to prevent said respective location applications from positioning said mobile terminal without affecting the ability of remaining ones of said location applications remaining within said list of location application identities to position said mobile terminal.

26. A telecommunications system for allowing a mobile subscriber to selectively permit certain location applications to perform positioning of a mobile terminal associated with said mobile subscriber, each of said location applications having a separate identity associated therewith, said telecommunications system comprising:

means for defining, by said mobile subscriber, a Subscriber Location Privacy Profile (SLPP), said SLPP containing a list of location application identities allowed to position said mobile terminal;

means for receiving a positioning request for said mobile terminal from a requesting location application, said positioning request including said identity of said requesting location application; and

means for enabling authorization of said positioning request, by said SLPP, when said identity of said requesting location application is within said list of location application identities.

* * * * *

UNITED STATES PATENT AND TRADEMARK OFFICE

# CERTIFICATE OF CORRECTION

PATENT NO. : 6,360,102 B1
DATED : March 19, 2002
INVENTOR(S) : Theodore Havinis et al.



It is certified that error appears in the above-identified patent and that said Letters Patent is hereby corrected as shown below:

Column 7,
Line 51, replace "network is operator" with -- network operator --

Signed and Sealed this

Eighteenth Day of June, 2002

*Attest:*

*Attesting Officer*

JAMES E. ROGAN
*Director of the United States Patent and Trademark Office*