US006285987B1

(12) **United States Patent**
Roth et al.

(10) **Patent No.: US 6,285,987 B1**
(45) **Date of Patent: Sep. 4, 2001**

(54) **INTERNET ADVERTISING SYSTEM**

(75) Inventors: **David William Roth**; **Dylan Salisbury**, both of San Francisco, CA (US)

(73) Assignee: **Engage, Inc.**, Andover, MA (US)

(*) Notice: Subject to any disclaimer, the term of this patent is extended or adjusted under 35 U.S.C. 154(b) by 320 days.

(21) Appl. No.: **08/787,979**

(22) Filed: **Jan. 22, 1997**

(51) **Int. Cl.**[7] **G06F 17/40**; G06F 17/60

(52) **U.S. Cl.** **705/27**; 705/26; 705/14; 705/37; 705/400

(58) **Field of Search** 705/26, 27, 14, 705/37, 400

(56) **References Cited**

U.S. PATENT DOCUMENTS

4,703,423	*	10/1987	Bado et al.	705/1
4,789,928	*	12/1988	Fujisaki	705/37
5,105,184		4/1992	Pirani	340/721
5,305,195		4/1994	Murphy .	
5,515,270	*	5/1996	Weinblatt	705/14
5,584,025		12/1996	Keithlety	395/615
5,684,963	*	11/1997	Clement	705/26
5,710,884	*	1/1998	Dedrick	395/200.47
5,721,827		2/1998	Logan et al. .	
5,724,521	*	3/1998	Dedrick	705/26
5,740,549	*	4/1998	Reilly et al.	705/14
5,745,882	*	4/1998	Bixler et al.	705/26

FOREIGN PATENT DOCUMENTS

WO 9726729 * 7/1997 (WO) .

OTHER PUBLICATIONS

Frook, John Evans, "Web sites sell ad space through auction—Despite industry skepticism, Individual Inc. and Netscape try out new strategies", Interactive Age, v2, n20, p. 5, 1 page, Jul. 1995.*

Article by Toland, P., entitled "CNET: The Computer Network Unveils Revolutionary Internet Advertising Tool That Allows Customer Banner Ad Delivery Based on Demographic Information", PR Newswire, Dateline: San Francisco, Dec. 6, 1995 (3 pages).

(List continued on next page.)

Primary Examiner—Allen R. MacDonald
Assistant Examiner—James W. Myhre
(74) *Attorney, Agent, or Firm*—Ropes & Gray

(57) **ABSTRACT**

A system for providing advertisements from a central server to viewers who access web sites. The central server stores both advertisements which are to be displayed and an information data base. The data base includes information about viewers, information about the characteristics of particular web sites and other information relevant to which advertisements should be displayed for particular viewers. Proposed bids submitted by different advertisers are evaluated in real time in order to determine which particular advertisement will be displayed to a viewer. Each proposed bid can specify a price or amount that the advertiser is willing to pay for the opportunity to display an advertisement (a) to a viewer who has a particular set of characteristics and (b) on a web site and web page that meets a particular set of criteria. The system includes (a) a web server system which has data bases stored therein, (b) bidding agents which compare the characteristics of view-ops to the specifications in proposed bids and which submit bids as appropriate, and (c) bid selection logic which decides which bid to accept for each particular view-op.

17 Claims, 13 Drawing Sheets

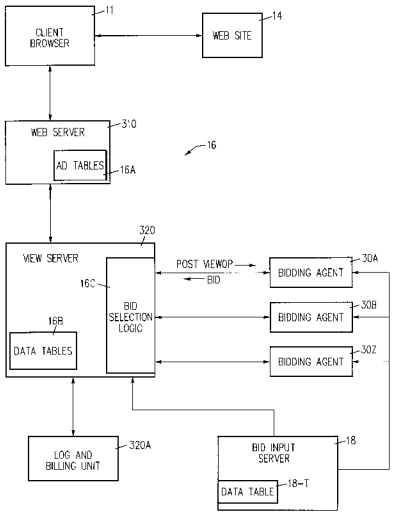

VIANT-1036

OTHER PUBLICATIONS

"Sites Dip Into Cookies to Track User Info", 2 pgs, Obtained from Internet site http://www.webweek.com printed from Internet Aug. 5, 1996.
"Cybertimes Start Ups Plot to make the Web Confortable for Advertisers" 4 pgs Obtained from Internet site http://www.netgravithy.com printed from Internet Mar. 28, 1996.
"Click here for DoubleClick Information Request Form et. seq." 82 pgs, Obtained form Internet site http://www.doubleclick.net printed from Internet Aug. 4, 1996.
"Focalink Welcome to Focalink" 34 pgs. Obtained from Internet site http://www.focalink.com etc. printed from Internet Aug. 8, 1996.
"About Worldata Worlddata Information Marketing Services", 48 pgs. Obtained from Internet site http://www.worldata.com printed from Internet Sep. 3, 1996.
Imgis AdForce Features and Benefits: 12 pgs Obtained from Internet site http://www.imgis.com printed from Internet Jul. 28, 1996.

* cited by examiner

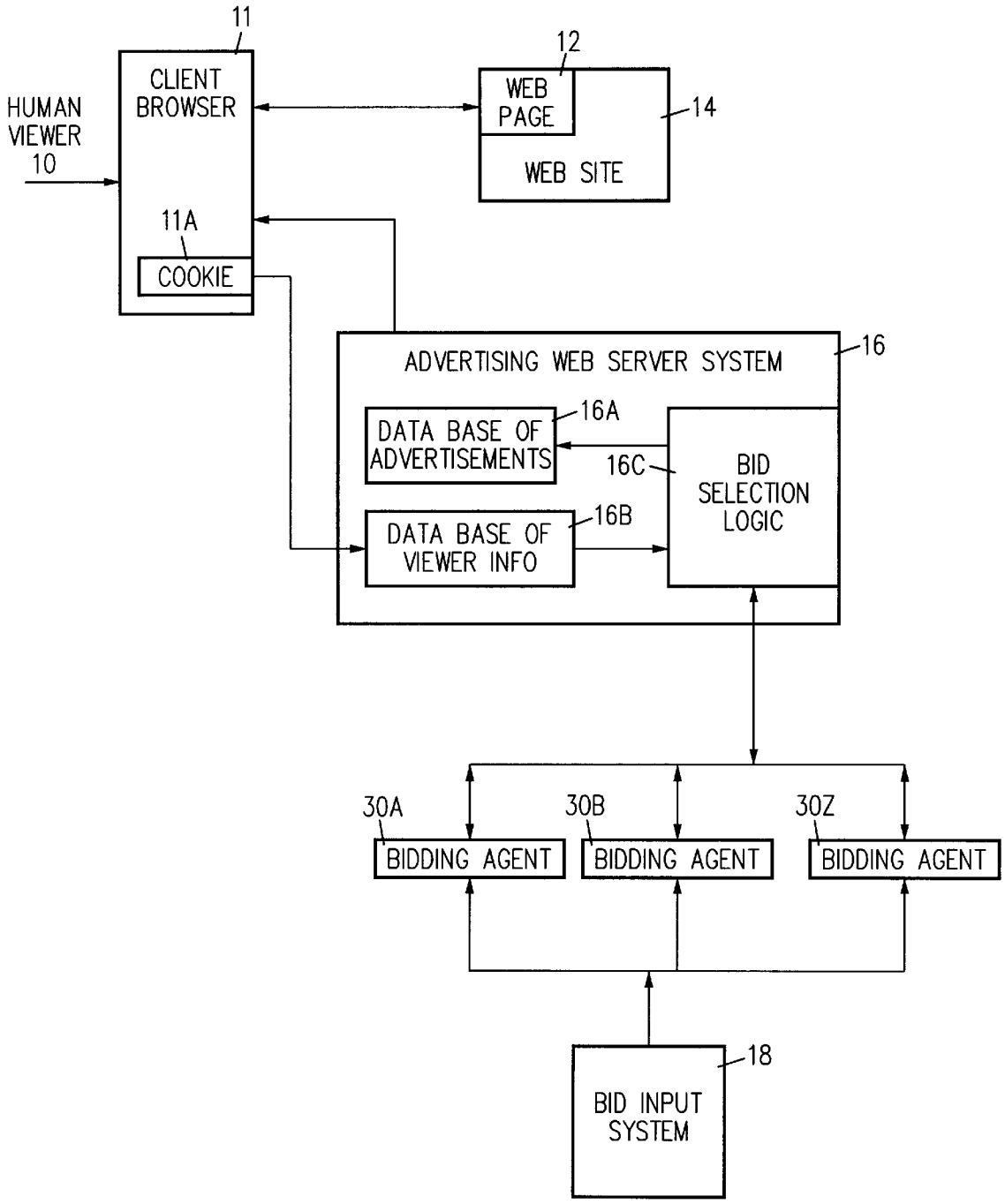
11
CLIENT BROWSER
HUMAN VIEWER 10
11A
COOKIE
12
WEB PAGE
14
WEB SITE
ADVERTISING WEB SERVER SYSTEM
16
DATA BASE OF ADVERTISEMENTS
16A
16C
BID SELECTION LOGIC
DATA BASE OF VIEWER INFO
16B
30A
30B
30Z
BIDDING AGENT
BIDDING AGENT
BIDDING AGENT
18
BID INPUT SYSTEM

FIG. 1

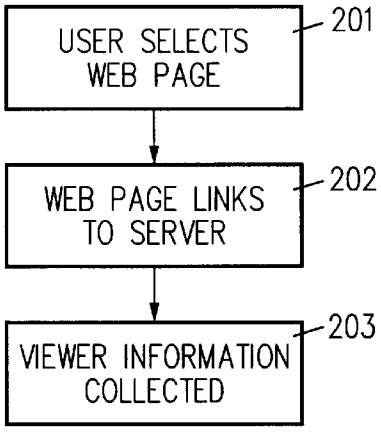
USER SELECTS WEB PAGE
201
WEB PAGE LINKS TO SERVER
202
VIEWER INFORMATION COLLECTED
203

FIG. 2A

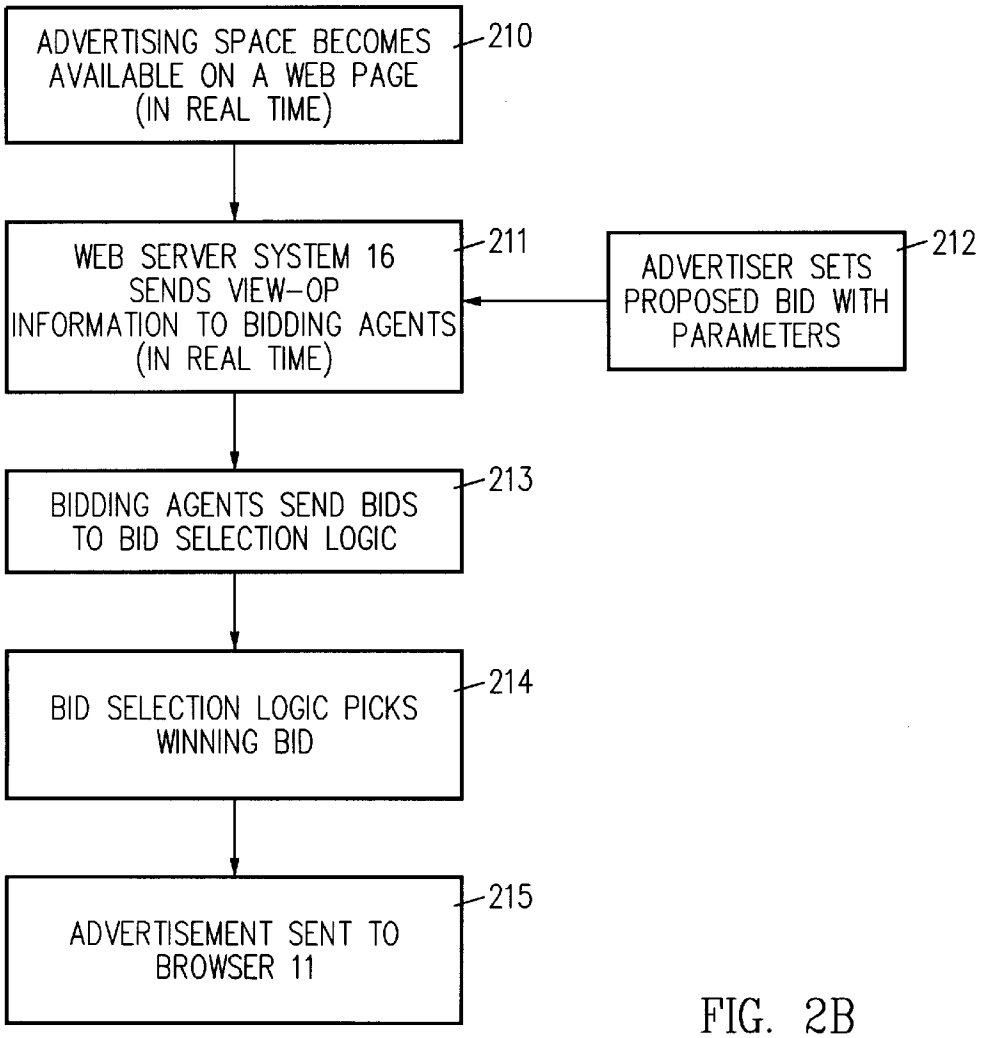
ADVERTISING SPACE BECOMES AVAILABLE ON A WEB PAGE (IN REAL TIME)
210
WEB SERVER SYSTEM 16 SENDS VIEW-OP INFORMATION TO BIDDING AGENTS (IN REAL TIME)
211
ADVERTISER SETS PROPOSED BID WITH PARAMETERS
212
BIDDING AGENTS SEND BIDS TO BID SELECTION LOGIC
213
BID SELECTION LOGIC PICKS WINNING BID
214
ADVERTISEMENT SENT TO BROWSER 11
215

FIG. 2B

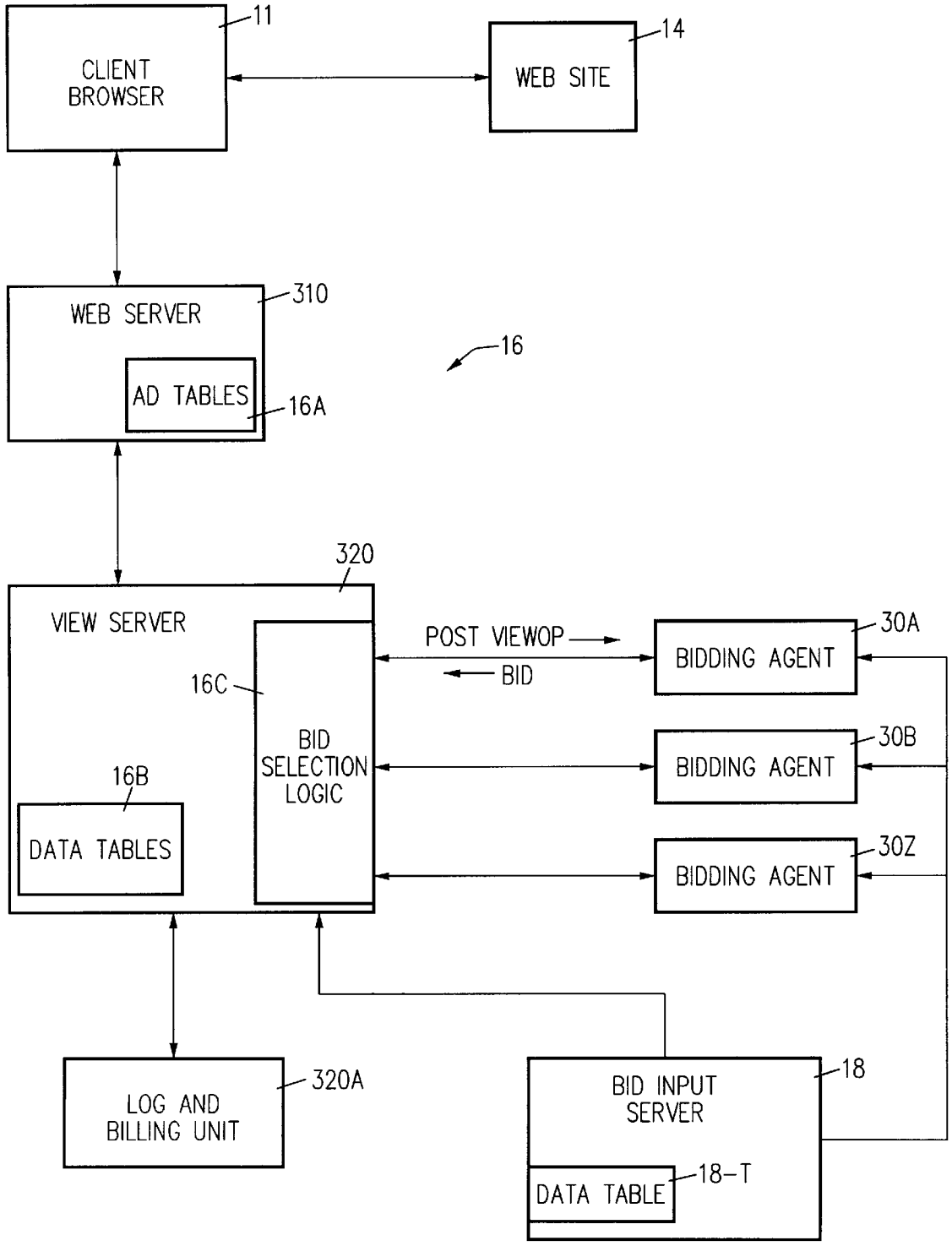
CLIENT BROWSER
11
WEB SITE
14
WEB SERVER
310
AD TABLES
16A
16
VIEW SERVER
320
16C
BID SELECTION LOGIC
16B
DATA TABLES
POST VIEWOP
BID
BIDDING AGENT
30A
BIDDING AGENT
30B
BIDDING AGENT
30Z
LOG AND BILLING UNIT
320A
BID INPUT SERVER
18
DATA TABLE
18-T

FIG. 3

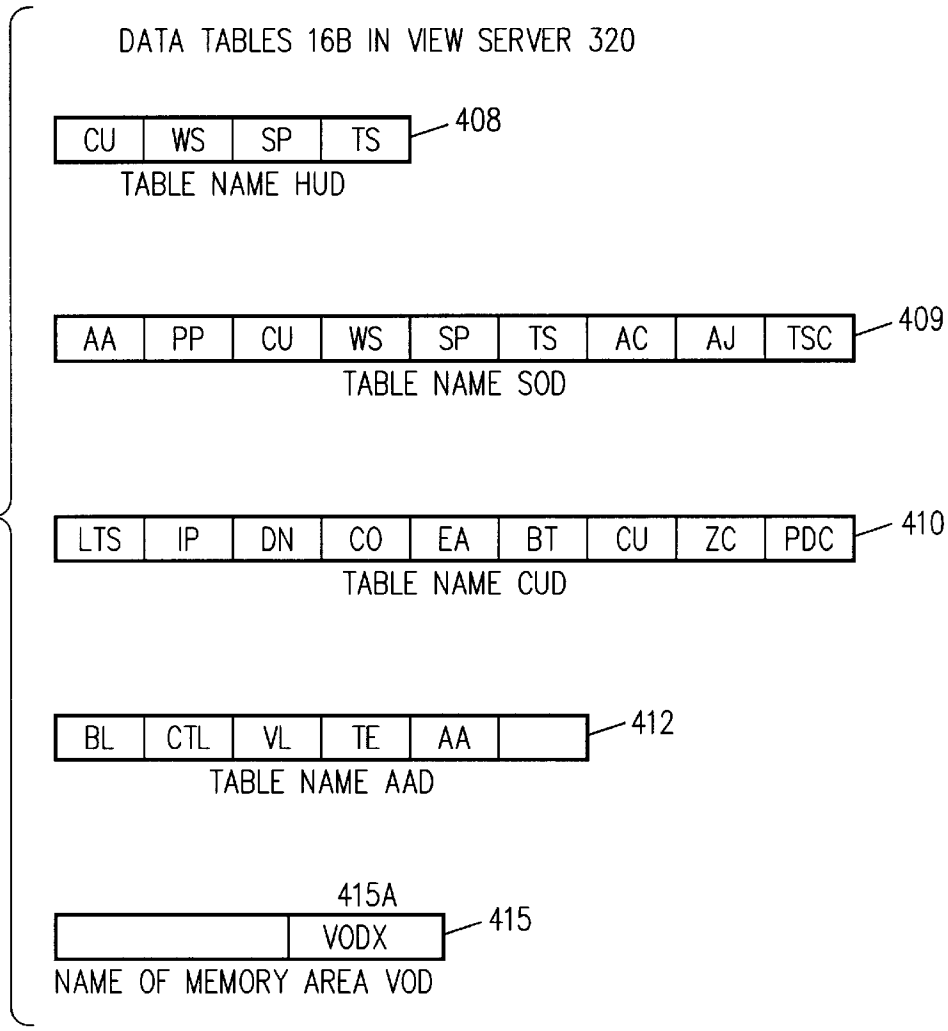
DATA TABLES 16B IN VIEW SERVER 320
CU
WS
SP
TS
408
TABLE NAME HUD
AA
PP
CU
WS
SP
TS
AC
AJ
TSC
409
TABLE NAME SOD
LTS
IP
DN
CO
EA
BT
CU
ZC
PDC
410
TABLE NAME CUD
BL
CTL
VL
TE
AA
412
TABLE NAME AAD
415A
VODX
415
NAME OF MEMORY AREA VOD

FIG. 4

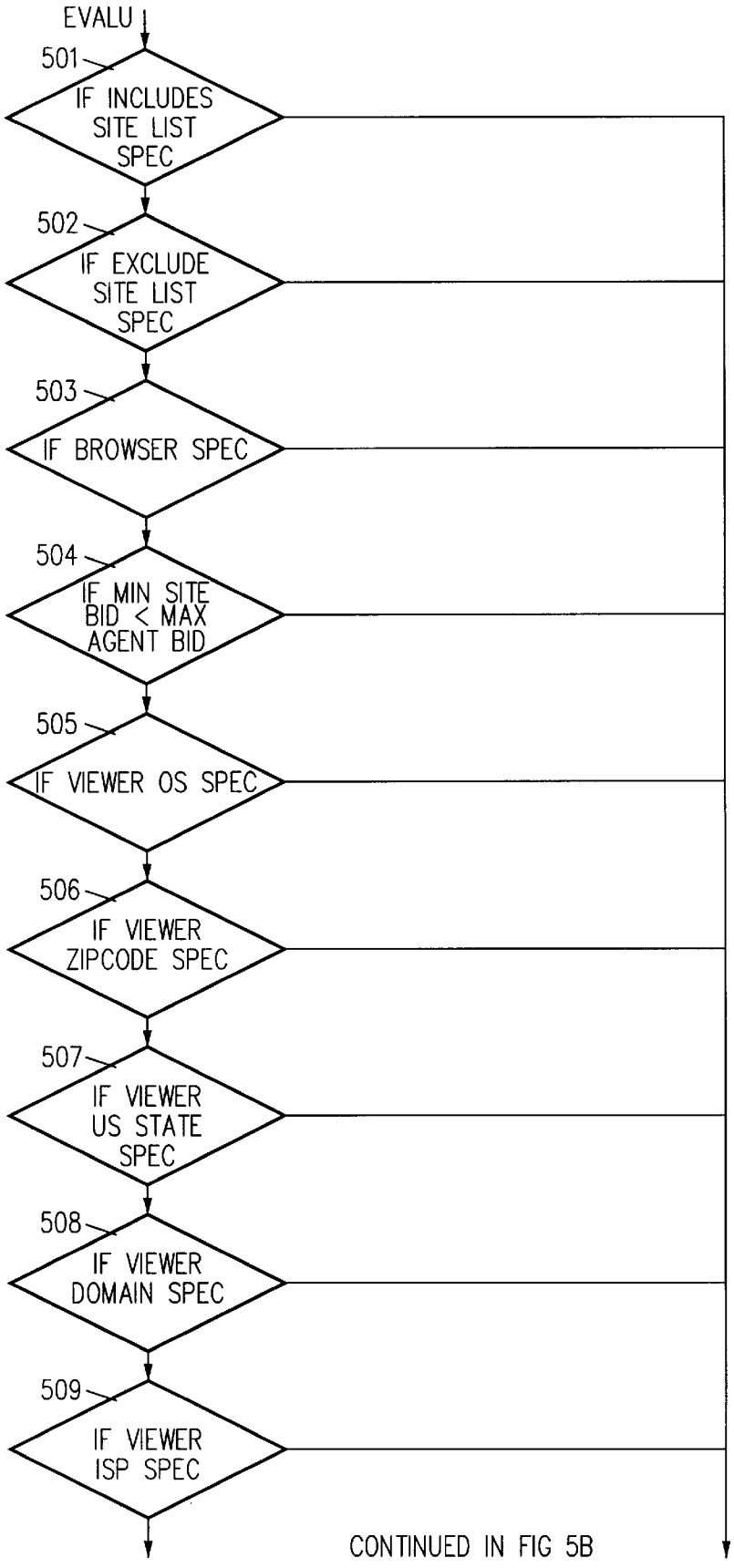
EVALU
501
IF INCLUDES SITE LIST SPEC
502
IF EXCLUDE SITE LIST SPEC
503
IF BROWSER SPEC
504
IF MIN SITE BID < MAX AGENT BID
505
IF VIEWER OS SPEC
506
IF VIEWER ZIPCODE SPEC
507
IF VIEWER US STATE SPEC
508
IF VIEWER DOMAIN SPEC
509
IF VIEWER ISP SPEC
CONTINUED IN FIG 5B

FIG. 5A

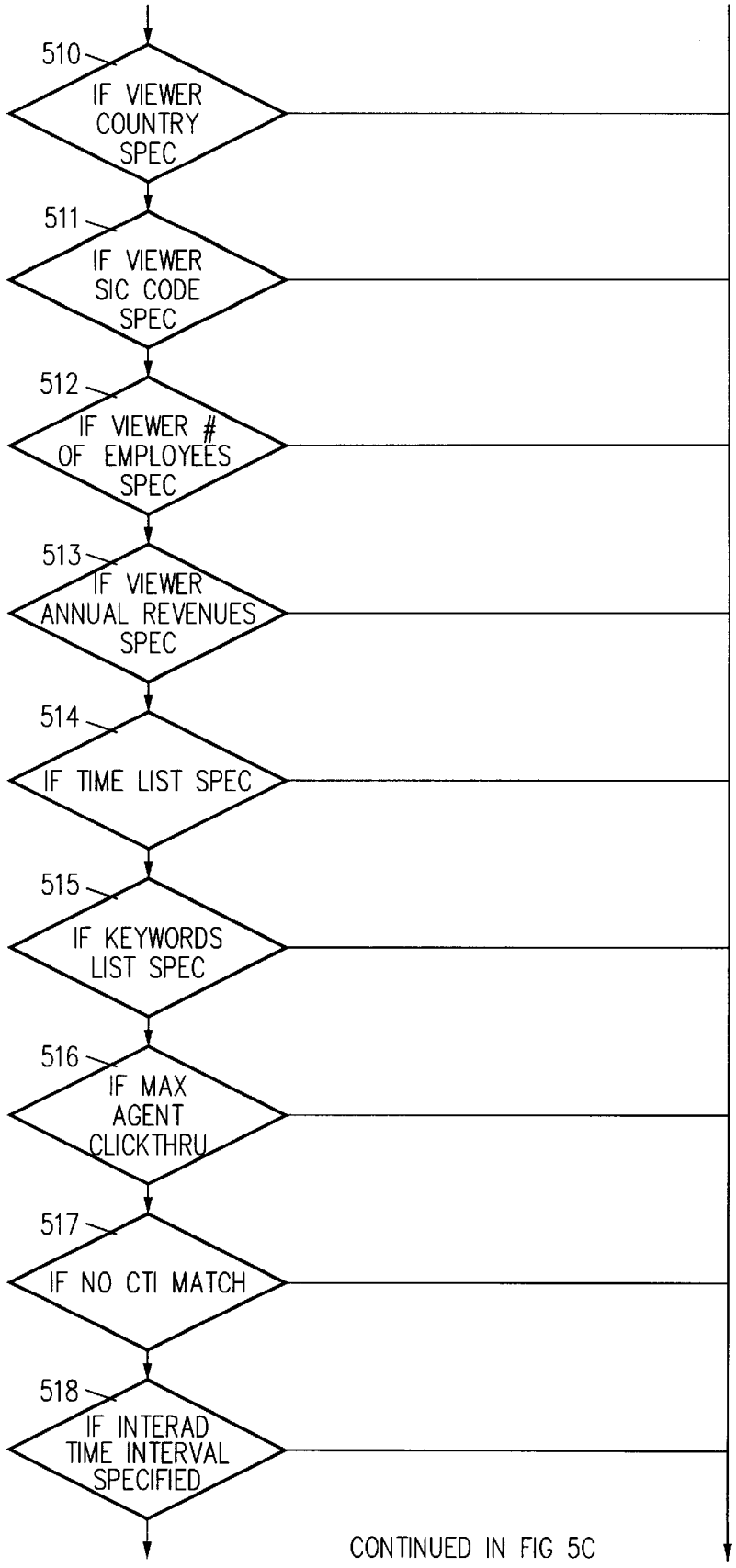
510
IF VIEWER COUNTRY SPEC
511
IF VIEWER SIC CODE SPEC
512
IF VIEWER # OF EMPLOYEES SPEC
513
IF VIEWER ANNUAL REVENUES SPEC
514
IF TIME LIST SPEC
515
IF KEYWORDS LIST SPEC
516
IF MAX AGENT CLICKTHRU
517
IF NO CTI MATCH
518
IF INTERAD TIME INTERVAL SPECIFIED
CONTINUED IN FIG 5C

FIG. 5B

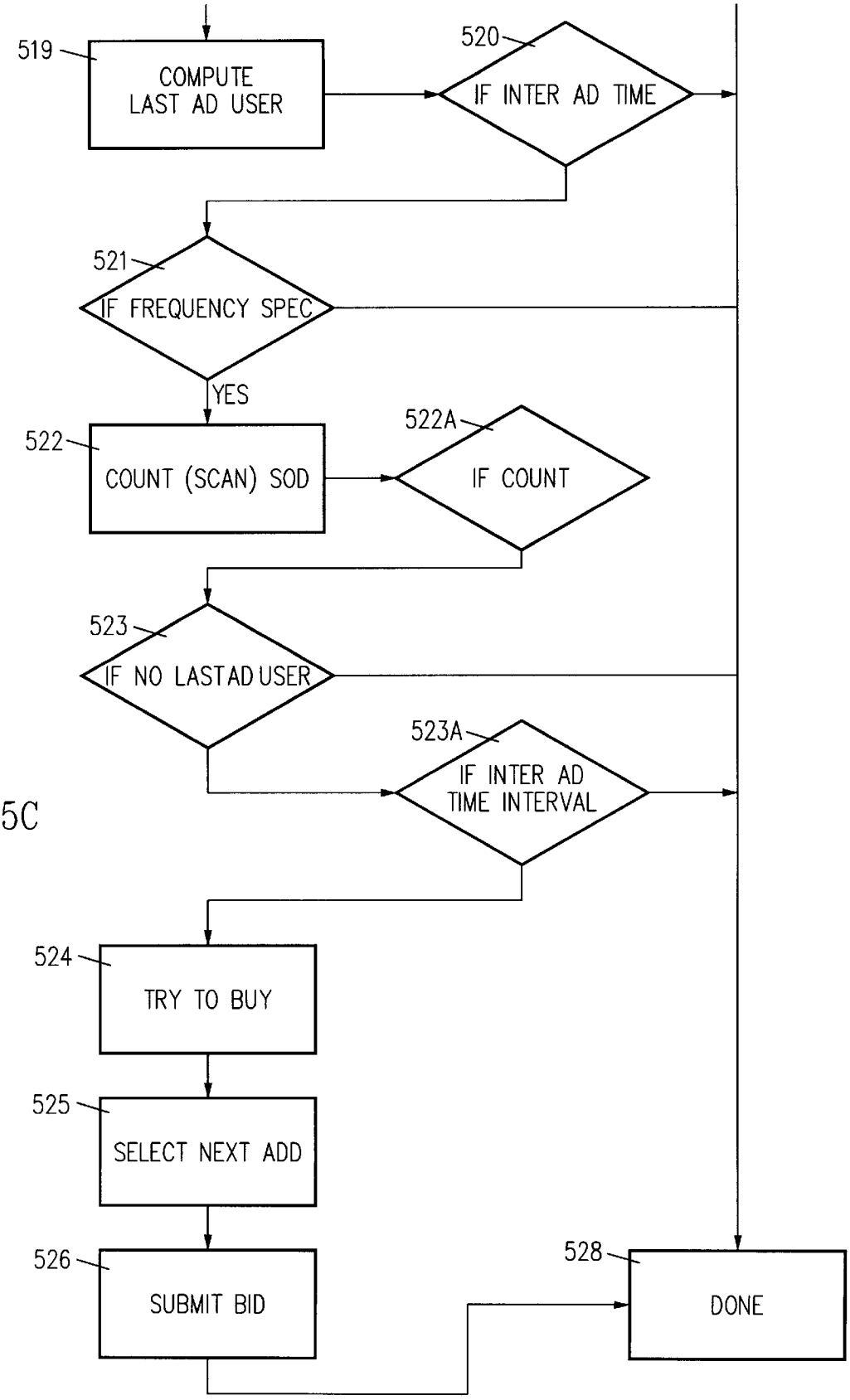
519
COMPUTE LAST AD USER
520
IF INTER AD TIME
521
IF FREQUENCY SPEC
YES
522
COUNT (SCAN) SOD
522A
IF COUNT
523
IF NO LASTAD USER
523A
IF INTER AD TIME INTERVAL
524
TRY TO BUY
525
SELECT NEXT ADD
526
SUBMIT BID
528
DONE

FIG. 5C

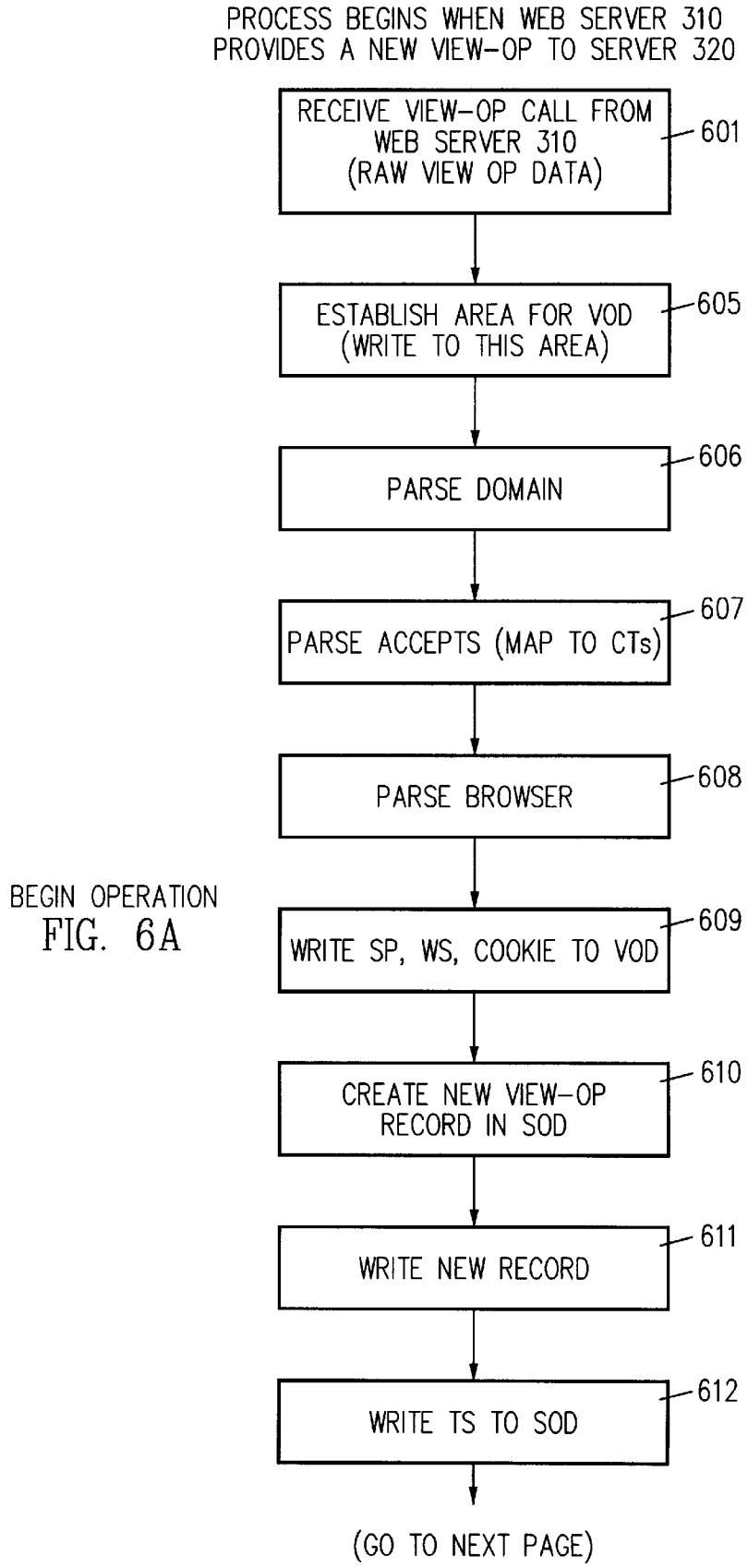
PROCESS BEGINS WHEN WEB SERVER 310
PROVIDES A NEW VIEW-OP TO SERVER 320
RECEIVE VIEW-OP CALL FROM WEB SERVER 310 (RAW VIEW OP DATA)
601
ESTABLISH AREA FOR VOD (WRITE TO THIS AREA)
605
PARSE DOMAIN
606
PARSE ACCEPTS (MAP TO CTs)
607
PARSE BROWSER
608
BEGIN OPERATION
FIG. 6A
WRITE SP, WS, COOKIE TO VOD
609
CREATE NEW VIEW-OP RECORD IN SOD
610
WRITE NEW RECORD
611
WRITE TS TO SOD
612
(GO TO NEXT PAGE)

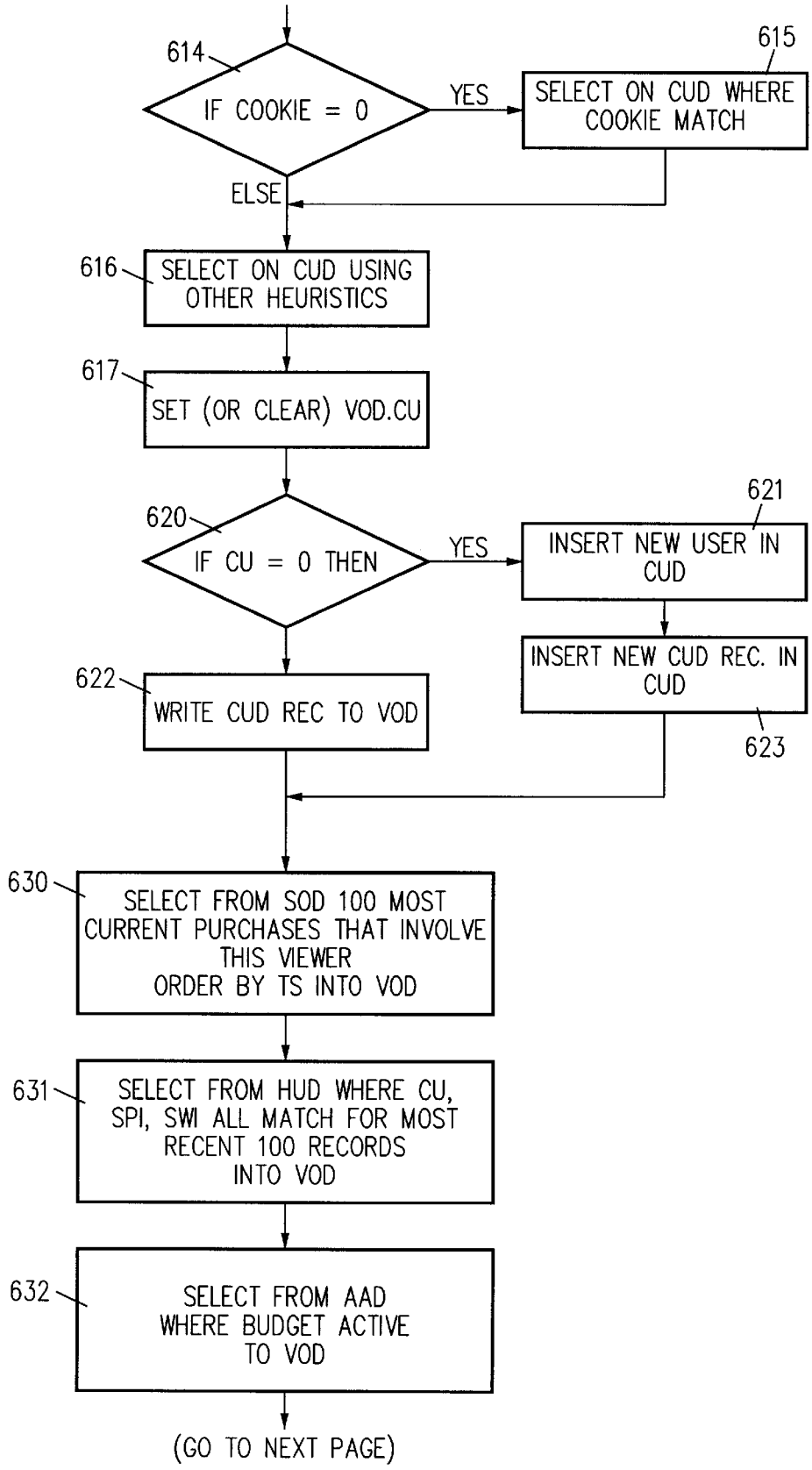
614
IF COOKIE = 0
YES
615
SELECT ON CUD WHERE COOKIE MATCH
ELSE
616
SELECT ON CUD USING OTHER HEURISTICS
617
SET (OR CLEAR) VOD.CU
620
IF CU = 0 THEN
YES
621
INSERT NEW USER IN CUD
INSERT NEW CUD REC. IN CUD
623
622
WRITE CUD REC TO VOD
630
SELECT FROM SOD 100 MOST CURRENT PURCHASES THAT INVOLVE THIS VIEWER ORDER BY TS INTO VOD
631
SELECT FROM HUD WHERE CU, SPI, SWI ALL MATCH FOR MOST RECENT 100 RECORDS INTO VOD
632
SELECT FROM AAD WHERE BUDGET ACTIVE TO VOD
(GO TO NEXT PAGE)

FIG. 6B

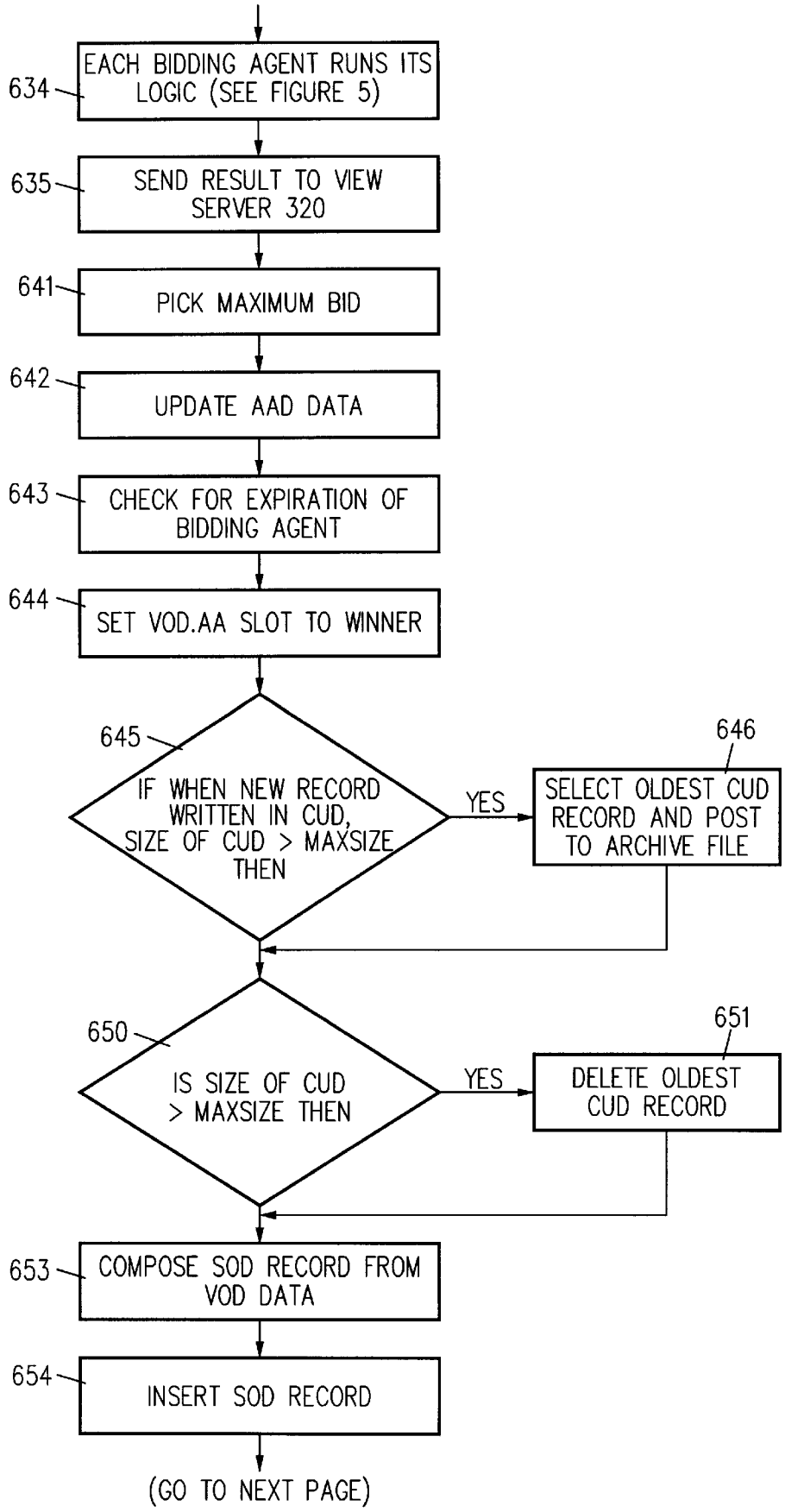
634
EACH BIDDING AGENT RUNS ITS LOGIC (SEE FIGURE 5)
635
SEND RESULT TO VIEW SERVER 320
641
PICK MAXIMUM BID
642
UPDATE AAD DATA
643
CHECK FOR EXPIRATION OF BIDDING AGENT
644
SET VOD.AA SLOT TO WINNER
645
IF WHEN NEW RECORD WRITTEN IN CUD, SIZE OF CUD > MAXSIZE THEN
YES
646
SELECT OLDEST CUD RECORD AND POST TO ARCHIVE FILE
650
IS SIZE OF CUD > MAXSIZE THEN
YES
651
DELETE OLDEST CUD RECORD
653
COMPOSE SOD RECORD FROM VOD DATA
654
INSERT SOD RECORD
(GO TO NEXT PAGE)

FIG. 6C

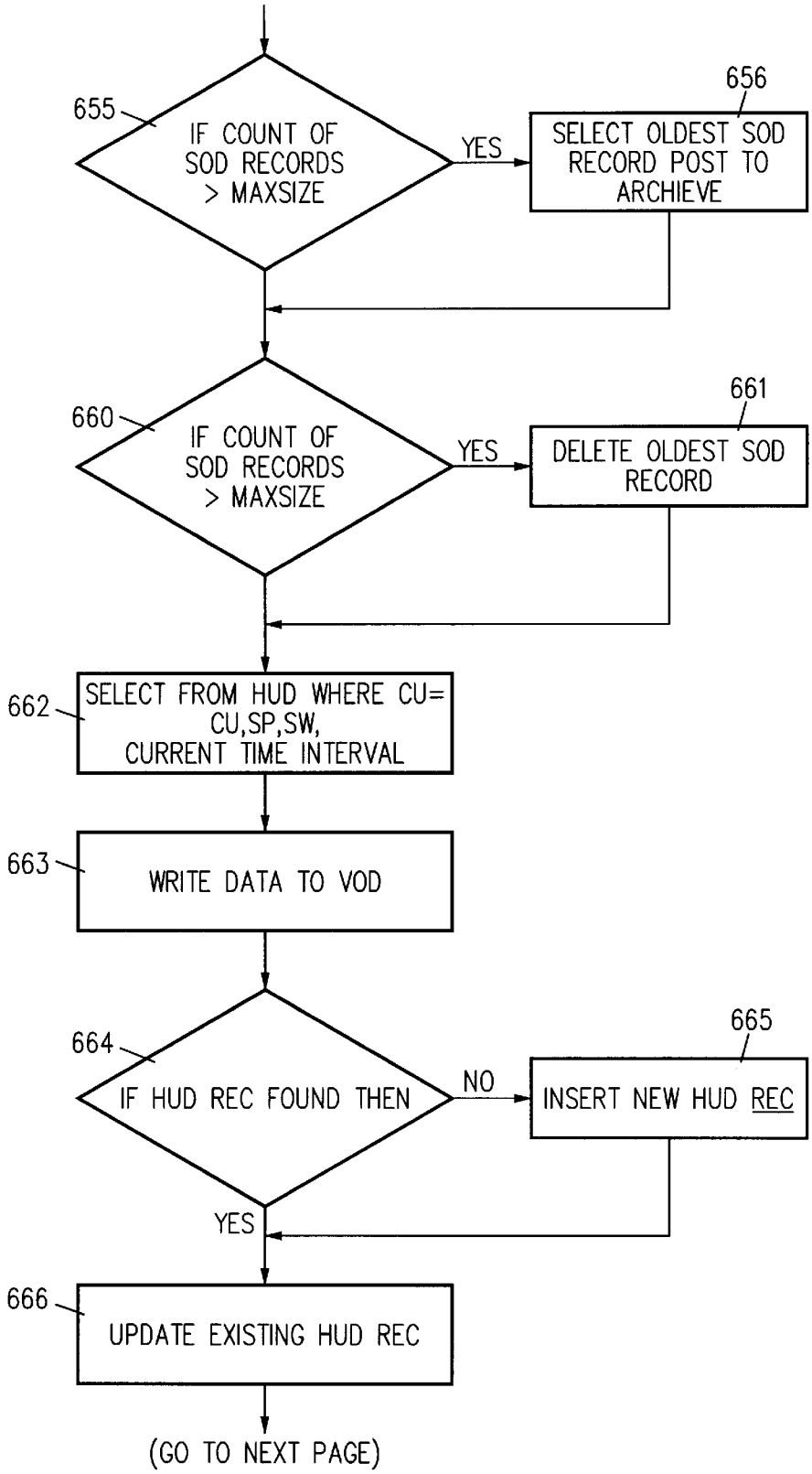
655
IF COUNT OF SOD RECORDS > MAXSIZE
YES
656
SELECT OLDEST SOD RECORD POST TO ARCHIEVE
660
IF COUNT OF SOD RECORDS > MAXSIZE
YES
661
DELETE OLDEST SOD RECORD
662
SELECT FROM HUD WHERE CU= CU,SP,SW, CURRENT TIME INTERVAL
663
WRITE DATA TO VOD
664
IF HUD REC FOUND THEN
NO
665
INSERT NEW HUD REC
YES
666
UPDATE EXISTING HUD REC
(GO TO NEXT PAGE)

FIG. 6D

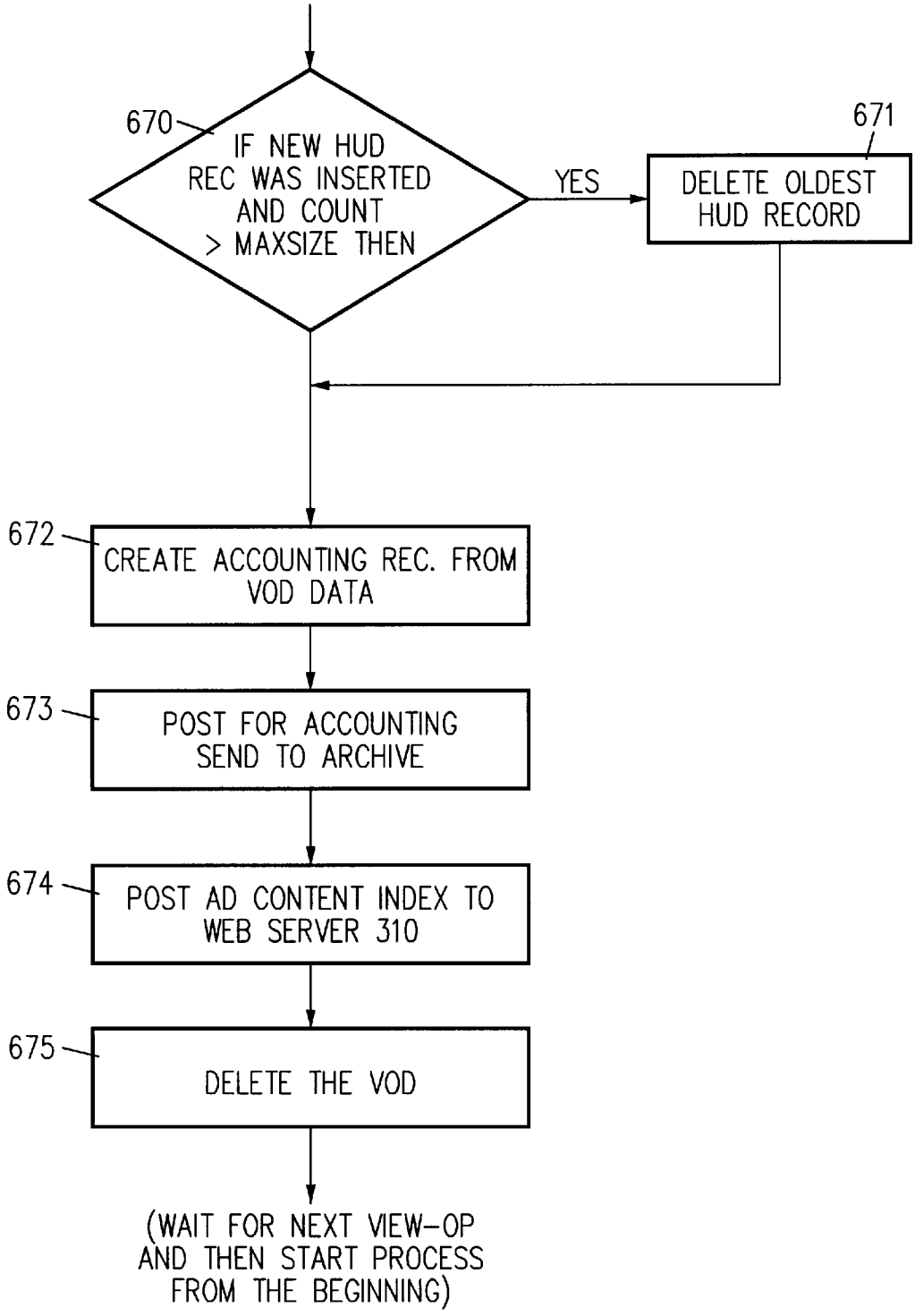
670
IF NEW HUD REC WAS INSERTED AND COUNT > MAXSIZE THEN
YES
671
DELETE OLDEST HUD RECORD
672
CREATE ACCOUNTING REC. FROM VOD DATA
673
POST FOR ACCOUNTING SEND TO ARCHIVE
674
POST AD CONTENT INDEX TO WEB SERVER 310
675
DELETE THE VOD
(WAIT FOR NEXT VIEW-OP AND THEN START PROCESS FROM THE BEGINNING)

FIG. 6E

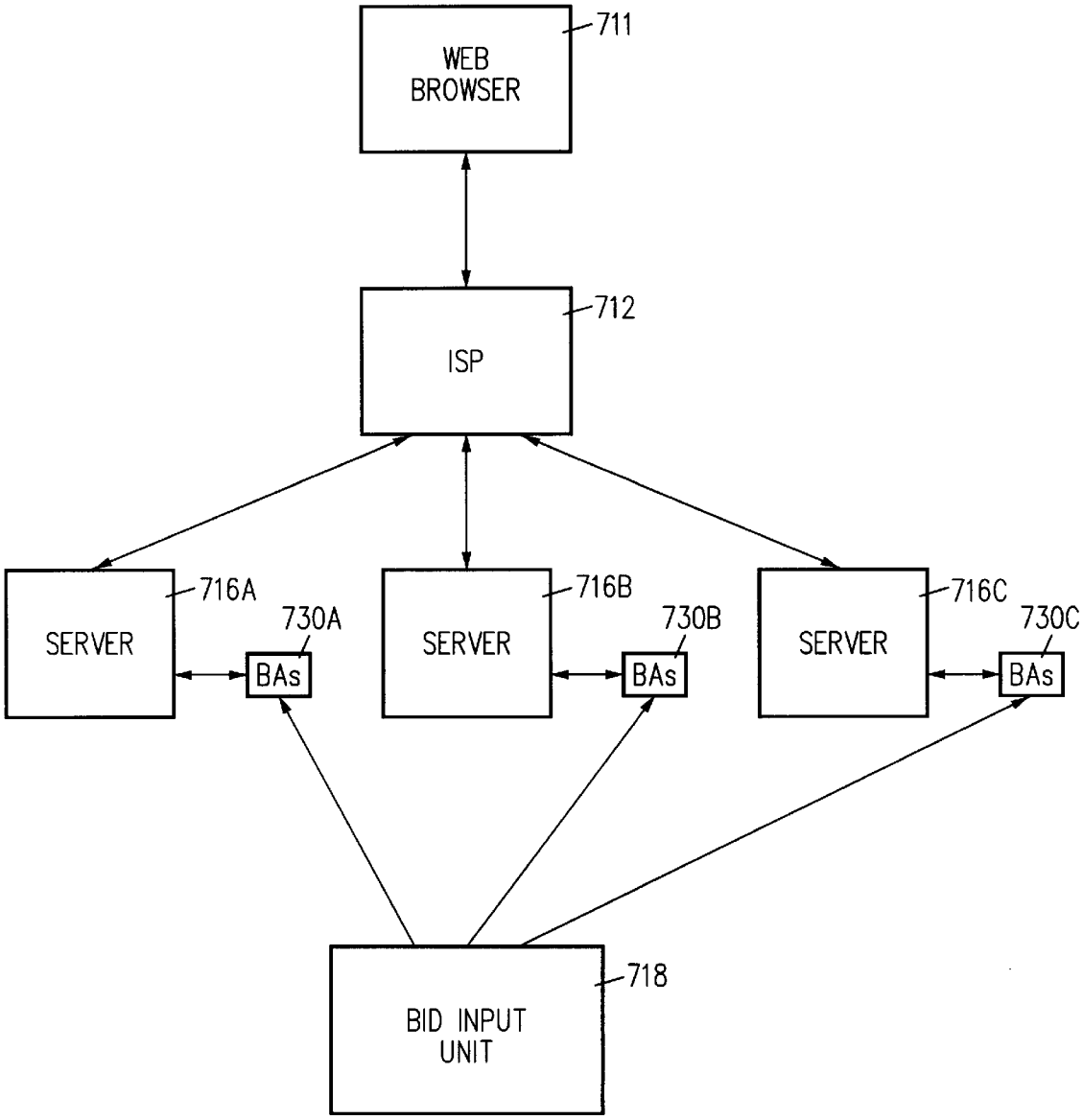
WEB BROWSER
711
ISP
712
SERVER
716A
730A
BAs
SERVER
716B
730B
BAs
SERVER
716C
730C
BAs
BID INPUT UNIT
718

FIG. 7

INTERNET ADVERTISING SYSTEM

FIELD OF THE INVENTION

The present invention relates to computer networks and more particularly to a method and system for selecting and then displaying advertisements on Internet World Wide Web sites.

BACKGROUND OF THE INVENTION

Many web sites on the Internet World Wide Web regularly display advertisements. The particular advertisement that is displayed when a viewer accesses a web site can either be stored locally on the web site or it can be stored on a central server. (As used herein the term viewer refers to an individual who views or looks at a web page using a program such as a web browser).

The Hyper Text Transfer Protocol (HTTP) and the Hyper Text Mark Up Language (HTML) provide a mechanism whereby a web page can easily reference material located on a remote server. The HTTP mechanisms for referencing and obtaining material from a remote server is useful in providing advertising material for display to viewers. There are commercially available systems which provide advertising material for web sites from a central server and various web pages have HTML references to this central server. With such an arrangement, when a viewer accesses a web page which has an appropriate HTML reference, the viewer sees advertisement that is provided by the central server.

Using standard HTTP facilities it is possible to track when a particular viewer accesses a web site and thus it is possible to compile a data base which in essence provides a profile of the sites a particular viewer has accessed. Furthermore, it is known that particular categories of viewers generally access particular types of web sites. The capabilities inherent in the World Wide Web for tracking the sites that a viewer has seen provides a mechanism for targeting particular advertisements to particular categories of viewers.

There are prior art systems which provide advertisements from a central server that has a data base of information concerning characteristics of viewers. A data base of viewer information can be compiled from a variety of sources including the information about a viewer which is available when a viewer accesses a server. In such prior art systems, the particular advertisement which is displayed when a particular viewer accesses a web site is determined by the characteristics of the viewer as provided by the data base of viewer information and by other information such as the characteristics of the web site which the viewer has accessed. Using such systems advertisers can target advertisements by criteria such as web site category, geographic location of the viewer, the operating system of the viewer's computer, the type of browser which the viewer is using, the Internet domain type of the viewer, etc.

Advertisers who use such prior art systems must specify in advance, the targeting criteria they want to use for their advertisements. The central server then provides advertisements to viewers based upon (a) the targeting criteria provided by the advertisers (b) the information which the central server has in its data base concerning the particular viewer, (c) information about the web site that has been accessed by the viewer and (d) other information available to the central server such as the time of day.

SUMMARY OF THE INVENTION

The present invention provides an improved method and system for providing advertisements from a central server to

viewers who access web sites. With the present invention the central server system stores both advertisements which are to be displayed and an information data base. The data base includes information about viewers, information about the characteristics of particular web sites and other information relevant to which advertisements should be displayed for particular viewers. In contrast to the prior art systems, the present invention evaluates, in real time, bids submitted by different advertisers in order to determine which particular advertisement will be displayed to a viewer.

The fact that a viewer has accessed a web page which has an HTML reference to the advertising server of the present invention, is herein referred to as a view opportunity or view-op. The characteristics of each view-op include the characteristics of the particular web site and web page being accessed and the characteristics of the viewer including demographic information about the viewer and information as to what other sites this viewer has accessed in various periods of time.

With the present invention each advertiser provides one or more "proposed bids" which specify how much the advertiser is willing to pay for displaying a particular advertisement in response to a view-op with certain characteristics. Each proposed bid can specify a price or amount that the advertiser is willing to pay for the opportunity to display an advertisement (a) to a viewer who has a particular set of characteristics and (b) on a web site and web page that meets a particular set of criteria. Each proposed bid can be dependent upon or require satisfaction of various criteria which must be met in order for a bid of a particular amount to be submitted. For example an advertiser might specify that the first one thousand times that view-ops meeting certain criteria occurs, a bid of five cents will be submitted and each time thereafter that a view-op meeting the criteria occurs a bid of one cent will be submitted. The amount bid for a view-op can be dependent on as many criteria as the advertiser cares to specify. Another example is that an advertiser might bid ten cents if the view-op was by a viewer who had recently visited a particular web page and one cent for the same view-op if the viewer had not recently visited the particular web page. Yet another example of a parameter which could be specified in a proposed bid is the "click-through" rate for the particular site where the view-op originated. The click-through rate is the rate at which viewers click on an advertisement to access the advertiser's web site. Thus, the bidding parameters can either be simple or complex.

The present invention includes (a) a web server system which has data bases stored therein, (b) bidding agents which compare the characteristics of view-ops to the specifications in proposed bids and which submit bids as appropriate, and (c) bid selection logic which decides which bid to accept for each particular view-op.

With the present invention, when a view-op arises, the bidding agents evaluate the characteristics of the view-op compared to the specifications in proposed bids and the bidding agents submit bids to the bid selection logic where appropriate. Next, the bid selection logic selects the highest bid from the various available bids and the advertisement which is specified in the highest bid is displayed. The novel aspect of the present invention is the organization, operation and interaction between the bidding agents, the server which provides information to the bidding agents, the bid selection logic and the associated mechanisms for presenting the advertisements.

The present invention provides a very flexible system whereby advertisers can minimize cost and maximize effec-

tiveness while the owner of web sites can obtain the highest possible revenue for displaying advertisements on their site.

BRIEF DESCRIPTION OF THE DRAWINGS

FIG. **1** is a simplified system block diagram of a preferred embodiment of the invention.

FIGS. **2**A and **2**B are simplified block flow diagrams of the operation of the invention.

FIG. **3** is an overall block diagram of a preferred embodiment of the invention.

FIG. **4** is a diagram showing the organization of various tables which are utilized by the present invention.

FIGS. **5**A to **5**C are flow diagrams showing how each view-op is evaluated or tested to determine if a bid should be submitted.

FIGS. **6**A to **6**E are flow diagrams showing the operation of the system.

FIG. **7** is a block diagram of an alternate embodiment of the invention.

DETAILED DESCRIPTION OF EMBODIMENTS OF THE INVENTION

In order to explain the principles of the invention, an overall simplified diagram of a first preferred embodiment of the invention is shown in FIG. **1** and a simplified block diagram of the operation of the system is shown in FIGS. **2**A and **2**B. After the principles of the invention have been explained with reference to FIGS. **1** and **2**, the first preferred embodiment of the invention is described with reference to FIGS. **3** to **6**.

As shown in FIG. **1**, a human viewer **10** utilizes a client browser **11** to access a web page **12** on a web site **14**. The web page **12** is transmitted to browser **11** in a conventional manner. Web page **12** includes an HTML reference to a file (i.e. an advertisement) located on an advertising web server system **16**. The client browser **11** has what is known in the art as a "cookie" **11**A which provides information from browser **11** to the web server system **16**. The client browser **11**, the cookie **11**A, the web site **14** and the web page **12** are all conventional and in widespread use. For example, the client browser **11** could be one of the commercially available web browsers, for example, the commercially available and widely used web browser marketed by Netscape Communications Corp. under the trademark "Netscape Navigator". The web site **14** and the web page **12** could be any of the thousands of web sites and web pages which are part of the World Wide Web and which have HTML references to advertisements which are located on a remote server.

Web page **12** includes an HTML reference to an advertisement stored on advertising web server system **16**. Each time client browser **11** displays web page **12**, the human viewer **10** will see an advertisement which is provided by advertising web server system **16**. Such HTML references are in widespread use and they are implemented using conventional HTML tags. Advertising web server system **16** includes a data base of advertisements **16**A, a data base of viewer information **16**B, and a bid selection logic **16**C. The bid selection logic **16**C receives bids from bidding agents **30**A to **30**Z which in turn receive information concerning proposed bids from bid input system **18**. For purposes of illustration only three identical bidding agents **30**A, **30**B and **30**Z are specifically shown. The reference number **30** will be used to refer to a typical bidding agent It should be understood that the system could include any number of bidding agents. For example, a system could include several thousand bidding agents **30**. Bid input system **18** provides bidding agents **30** with proposed bids which specify how much should be bid for view-ops with particular characteristics. Each bidding agents **30** evaluates each view-op to determine if the view-op meets the criteria specified in a particular proposed bid and if so how much should be bid.

Each bidding agent **30** evaluates a view-op with respect to one proposed bid to determine if a bid should be submitted. Each proposed bid includes a list of parameters which specify the particular type of viewer which the advertiser wants to reach. For example, a proposed bid might specify that the advertiser is willing to pay five cents for the opportunity to place an advertisement on a web page which is accessed by a viewer who has accessed three financial web pages and an automotive web page within the last week.

In general the system includes one bidding agent **30** for each proposed bid (see later discussion about multi-level bids). Each advertiser would have an associated bidding agent **30** for each ad campaign the advertiser wants to conduct. Advertisers submit proposed bid, to their associated bidding agents for evaluation against view-ops. Bidding agents **30** can be simple or complex and if desired they can have the ability to evaluate more than one proposed bid to determine what bid should be submitted to the bid selection logic **16**C.

When a view-op presents itself (i.e. when viewer **10** accesses a web page **11** which contains an HTML reference to server system **16**) the advertising web server system **16** performs four operations:

(1) It updates the information about the viewer which is in data base **16**B.

(2) It sends information concerning the view-op to the bidding agents **30**. The information sent includes information that the server system **16** received from browser **11** and information in data base **16**B. Bidding agents **30** in turn decide which bids to submit to bid selection logic **16**C.

(3) It compares various bids received from bidding agents **30** in order to determine which advertisement to display.

(4) It sends the appropriate advertisement from data base **16**A to browser **11**.

The operations performed by advertising web server system **16** are shown in FIGS. **2**A and **2**B. FIG. **2**A shows how server system **16** uses the information from cookie **11**A to update the data base of viewer information **16**B to reflect the fact that this particular viewer has accessed this particular web page. The operations proceed as shown by blocks **201** to **203**. Block **201** indicates that a viewer has selected web page **12** and that the selected web page has been transmitted to the viewer's browser **11**. As indicated by block **202**, web page **12** has an HTML reference to a file on server system **16** using conventional HTML techniques. Block **203** indicates that the server **16** then obtains data from cookie **11**A to update the data base of viewer information **16**B.

When a viewer **10** accesses web page **12**, which has an HTML reference to server system **16**, the present invention determines which advertisement from data base **16**A to present to the viewer. The manner in which the system performs these operations is shown by block diagram **2**B. For example, one advertiser might have submitted a proposed bid to bidding agent **30**A which specified that he is willing to pay five cents for displaying an ad to a viewer who has accessed at least three financially oriented data bases within the last week. Another advertiser might have submit-

ted a proposed bid to bidding agent **30**B specifying that he is willing to pay six cents for displaying an advertisement to a viewer that has accessed at least three financially oriented data bases with the last five days. When a view-op occurs which is initiated by a viewer **10** who has accessed three financially oriented data bases in the last five days, bidding agents **30**A and **30**B would determine that the particular view-op satisfies the criteria specified by both advertisers. Both bids would be submitted to bid selection logic **16**C and bid selection logic **16**C would then select the highest bid and the advertisement specified by that advertiser would be displayed to the viewer. The criteria specified by the advertisers may be much more complex and involve many more parameters than those given in the simple example specified above. However, notwithstanding the complexity of the proposed bids and the number of parameters specified in each proposed bid, the operations performed by bidding agents **30** and by bid selection logic **16**C are as explained in the above simple example.

As shown in FIG. **2**B, a cycle of operation begins (block **210**) when a viewer **10** selects a web page **12** which has a HTML reference to web server system **16**, that is, when a view-op occurs. It is noted that this occurs in real time and it can take place thousands of times per minute. Block **211** indicates that the web server system **16** sends information concerning the view-op and related information in the data base **16**B to the bidding agents **30**. The bidding agents **30** compare the information about the view-op to the proposed bids that have been submitted by advertisers. That is, the bidding agents **30** determine if the characteristics of the view-op meet the criteria in the proposed bids and if so they submit bids to bid selection logic **16**C (block **213**). As shown by block **214**, the bid selection logic **16**C compares various bids and selects the highest bid and therefore an advertisement for display. The appropriate advertisement called for by the winning bid is then sent from data base **16**A to browser **11** (block **215**).

Block **212** indicates that each advertiser submits proposed bids, each of which includes various parameters which, for example, specify the type of web page on which the advertiser wants to advertise and an amount, (i.e. the dollar amount) which the advertiser is willing to pay for having a particular advertisement displayed. Details of the various parameters which can be included in a proposed bid are explained later.

In order to understand the power of the present system and its differences from the prior art, it is important to realize that the bidding agents **30** evaluate proposed bids in microseconds, that is, in real time. The rate at which "hits" on web pages occur (i.e. the rate at which viewers access web pages that have HTML reference to server system **16**) can be in the order of thousands per second. Thus, the evaluation of proposed bids is performed very quickly in real time. Proposed bids can contain parameters which specify that a proposed bid will in effect change in real time. For example a proposed bid might specify that for the first 1000 matching view-ops, the proposed bid wail be five cents and for the next 1000 matching view-ops the proposed bid will be four cents. The actual submission of proposed bids by advertisers and the rate at which advertisers can change their proposed bids is measured in minutes compared to the rate at which the system evaluates proposed bids which is in the order of microseconds.

The operation of the browser **11**, the operation of the web server **14**, and the manner in which web pages produce HTML references to web server system **16** using the HTTP protocol and HTML mark up language are described in numerous published books such as "HTML Source Book A Complete Guide to HTML" by IAN S. Graham, published by John Wiley and Sons (ISBN 0 471-11849-4) or "The Internet Compete Reference" by Harley Hahn and Rick Stout, published by Osborne McGraw-Hill, ISBM 0 07-881980-6. Numerous other books are also available which describe the HTTP protocol. Such books describe how a browser, such as **11**, can access a web page, such as web page **12**, which in turn has an HTML reference to a file (i.e. an advertisement) stored on a server such as advertising server system **16**.

A more detailed block diagram of the preferred embodiment of the invention is shown in FIG. **3**. Numerous additions and changes can be made in the preferred embodiment shown in FIG. **3** without departing from the spirit of the invention. As will be explained later with reference to FIG. **7**, a number of systems, each identical to the system shown in FIG. **3**, (and each of which is at a different geographic location) can be interconnected into a network so as to more efficiently service view-op requests.

As shown in FIG. **3**, the preferred embodiment is composed of five main units, namely, wet server **310**, view server **320** (servers **310** and **320** together comprise the advertising web server system **16** shown in FIG. **1**), identical bidding agents **30**A, **30**B and **30**Z, bid input server **18** and log and billing unit **320**A. As stated with respect to FIG. **1**, a system can include any number of bidding agents. A typical system could include a thousand or more bidding agents. For clarity of illustration only three bidding agents **30**A, **30**B and **30**Z are specifically shown in FIG. **3**. Hereinafter the term bidding agent **30** will refer to one representative bidding agent. It should be understood that there could be many bidding agents **30** in a system.

Bidding agents **30** evaluate bids to determine if a particular view-op meets the criteria of a particular bid. That is, bidding agents **30** compare the specifications in a proposed bid to the characteristics of a view-op. An example of the comparison process is explained later with reference to FIG. **5**. Bid selection logic **16**C in view server **320** determines which advertisement will be displayed, that is, which is the highest bid for each particular view-op.

The web client browser **11** accesses web sites (such as site **14**) using the conventional HTTP protocol. The present invention begins to function when the web page which is accessed by browser **11** contains a conventional Internet HTML reference to web server **310**.

The web server **310** provides an advertisement to web client browser **11** in response to an HTML reference. Such an operation is conventional. The function of the present invention i<; to determine which particular advertisement from data base **16**A will be provided in response to each HTML reference from web client browser **11** to web server **310**.

The web server **310**, view server **320**, bidding agents **30** and bid input server **18** can all be implemented by computer programs that are all resident in and executed by one single physical computer. Alternatively, each of the components may be implemented in separate physical computers connected by a conventional inter-computer network. The decision concerning implementation is a single computer or in a group of interconnected computers depends upon the cost, capacity and speed of the available computers. With respect to the explanation of the operation of the present invention, it is not relevant as to whether or not the various components are implemented in a single computer or in a network of interconnected computers.

The web server **310** can be implemented using conventional commercially available web server technology. For

example, the commercially available web server marketed under the tradename Zeus can be used to implement web server **310**. The operating system used in web server **310** is conventional and is not described herein. It could for example be the conventional Unix operating system likewise view server **320** and bid input server **18** have) a conventional operating system such as the Unix operating system. The processes and programs described herein run as application programs under such a conventional and commercially available operating system.

When web server **310** receives an HTTP request or HTML reference (a view-op), it delivers the contents the view-op to the view server **320**. View server **320** in turn sends information concerning the view-op to bidding agents **30**. Bidding agents **30** in turn evaluate the characteristics of the view-op (which includes information supplied by server **320**) against the criteria specified in each proposed bid. If the characteristics of a view-op meet the criteria in a proposed bid, a bidding agent **30** will submit a bid to view server **320**. After receiving input from bidding agents **30** (that is from all the bidding agents **30** that submit bids) the bid selection logic **16**C in view server **320** selects the highest bid and indicates to web server **310** which advertisement should be displayed in response to the view-op. In response to the input from view server **320**, the web server **310** delivers the appropriate advertisement to the web client **11**

Bidding agents **30** must be programmed to evaluate proposed bids in a certain amount of time and to submit actual bids to server **320** within preestablished time limits. If server **320** does not receive a bid from a particular bidding agent **30** within a certain time, it assumes that it will not receive a bid from that bidding agent and it selects the highest bid from the bids received from the other bidding agents.

The main functionality or the "kernel" of the system is implemented in the view server **320** and in bidding agents **30**. View server **320** has a number of tables, and conventional data base functionality for querying, inserting, updating and deleting data from the tables. The data base capabilities may be implemented using a conventional commercially available Structured Query Language (SQL) data base such as one of the data bases marketed by Oracle Corp. or the data base marketed by Microsoft Corp. under the tradename "Access". Alternatively, these tables can be implemented using specially written programming which optimizes the speed of certain operations.

View server **320** and bidding agents **30** are each objects (in the CORBA or Common Object Request Broker Request sense), they are persistent, and they can be moved across machine or network boundaries. Naturally performance is impacted depending upon whether or not these objects are implemented in one computer or in a network of connected computers. As is conventional, indexing techniques can be used in order to increase speed of operation related to the various tables.

The following terms are used herein with the following meaning:

Ad-Serve: Placing or "pumping" advertising content in an HTTP reply to a view-op. Note, putting advertising content in an HTTP reply results in an advertisement being displayed by a browser so that it can be seen by a Viewer.

Ad-Script: A script or mark up language for establishing bidding logic.

Bidding Agent A unit, computer program or agent (in the programming sense) that evaluates the characteristics of a view-op to determine if the criteria or parameters set out in a particular proposed bid meets the specifications of a particular view-op.

Click-through: The event that occurs when a Viewer clicks on an advertisement and is hyperlinked to new content.

Exposure: The number of ad serves for a particular advertisement.

Frequency: Number of times each viewer (on average) will be exposed to an advertisement.

In general the frequency is equal to the total number of exposures divided by the reach number.

I/CODE: A standard identifier assigned to individual viewers. I/Codes are used as registration information by many web sites. Interact Profiles Corporation offers a commercial service which collects in-depth demographic information about viewers for whom it issues or assigns I/Codes. This information or other similar information about viewers is stored in table **16**B.

Internet: The global information system that is logically linked together by a globally unique address space based on the Internet Protocol (IP). The Internet is able to support communications using the Transmission Control Protocol/Intemet Protocol (TCP/IP) suite.

IP Data: Data about the viewer which is specified using the Internet protocol. The IP data about a viewer is presented to the system at view-op time in accordance with standard HTTP conventions. The IP data is defined by standard HTTP conventions and it includes: CGI (common graphic interface) variables, Browser type (e.g. Netscape), viewers URL, high-level domain (.edu, .gov, .com, OS of viewer (MAC, Windows, etc.), host, IP address, and URL of referring Web page.

Maximum Bid Price: This is the maximum amount that can be specified when placing bids on behalf of a bidding agent. (see Minimize Bid).

Minimize Bid: This is an option that the media buyer (i.e. the person who buys the advertising) can set on or off (it is set for each media buy). If the option is set "on" then the system will try to bid the minimum amount necessary to maintain the level of buying that will ensure the desired number of impressions during the time allotted to the media buy. The amount bid will be increased as need to maintain the desired level of buying; however, it will never be increased beyond the maximum bid.

Pre-buy: The purchase of the right to display an advertisement in response to particular view-ops for a specified amount.

Proposed Bid: This is an offer to pay a particular amount for the opportunity to provide an advertisement in response to a view-op that has certain characteristics. If a view op satisfies the criteria specified in a proposed bid an actual bid (called a bid) is submitted to the bid selection logic **16**C.

Reach: The total number of unique viewers the advertiser wants to reach with the media buy. Cannot exceed the total number of exposures.

Recently Seen Ad Data: Information relating to the most recent advertisements served to a unique or particular viewer.

Snot Buy: A decision to purchase a particular view-op for a specified amount which is made in real time.

View-op: The opportunity to serve an advertisement to a viewer that occurs when a web browser makes a request for content by referencing to a server. This is the basic unit of "perishable inventory" that advertisers buy.

View-time: The length of time that a viewer looks at an advertisement.

Viewer: A person who accesses a page on a web site and receives an Ad-Serve.

Viewer History Data: Historical data about a unique or particular viewer. This may include such information as previous viewing habits, purchases, click-throughs, etc.

Viewer Registration Data: Data collected by a web site (at viewer registration time) including age, sex, income, etc. The uploading of this data to the server data base is performed in non-real-time.

Web Avail: Sellers inventory, that is, a slot for advertising content. "Avail" is an advertising term. Web avail is the equivalent term applied to the world wide web.

Web Page Data: Data concerning a web page such as: keywords, stock categorizations. Also includes (non-real time) third party-supplied data, as well as data provided by the system operator with respect to traffic, pricing, etc. concerning a particular site.

Web Site Demographic Data: This is data about a specific web site.

Web Site: A term conventionally used in connection with the World Wide Web. Usually an Ad space provider (seller).

The system utilizes a number of data tables **16**B which are stored in the view server **320** The structure of tables **16**B are shown in normalized form in FIG. **4**. The system also utilizes an area of memory for temporarily storing certain information. This area of memory is called the VOD area of memory. It should be understood, that as is conventional, some of the data in the tables **16**B can be stored in program structures and indexes which can then be used to access the data in order to increase speed. For best performance all of the tables **16**B must be located in RAM.

As shown in FIG. **4**, there are four tables referred to as HUD, SOD, CUD, AAD and one special area of memory referred to as VOD. The four tables and the special area of memory are:

HUD table **408**: This table stores Historic Viewer Data. It indicates which sites each viewer has previously accessed.

SOD table **409**: This table identifies the previously "sold" view-ops. This table tells who previously bought which view-ops.

CUD table **410**: This table identifies viewers and their characteristics.

AAD table **412**: This table identifies every active advertiser. There is a record in this table for every active advertiser.

VOD area of memory **415**: This area temporarily holds data which is being transferred to the bidding agents.

A conventional notation system is used to identify fields herein. Substructures of a main structure are designated by using the name of the main structure, followed by a period, followed by the name of the substructure. For example CUD.LST means the LST field of the CUD table.

The fields in the tables shown in FIG. **4** are identified using the following abbreviations:

HUD table **408** (Historic Viewer Data, which sites each viewer has previously accessed)

1) WS Web Site ID Site where ad was placed
2) SP Site Page ID Page where ad was placed
3) CU Current Viewer ID, this is, who saw the particular web site, the I/Code.
4) TI Time Interval
5) N Number of time the viewer CU visited the site in the time interval TI

SOD table **409**: (who previously bought which view-ops)

1) AA An identification of the bidding agent who purchased a view-op.
2) PP Purchase Price Purchase price for this view-op
3) CU Current Viewer ID I/Code of who saw the ad
4) WS Web Site ID where ad was placed
5) SP Site Page ID where ad was placed
6) TS TimeStamp when placed
7) AC Agent Content ID of ad that was placed
8) AJ Agent Jump ID of where click-throughs go
9) TSC TimeStamp when click-through happened, (0 for none)
10) VO View-op ID each view-op has a unique ID.

CUD table **410** (viewers and their characteristics)

1) LTS Last Seen Time Stamp, that is, time this viewer was last seen by the system
2) IP Internet Protocol address (from REMOTE_HOST)
3) DN Domain name Full Domain name (from REMOTE_ADDR)
4) CO Cookie
5) EA Email Address
6) BT Browser
7) CU I/CODE data
8) ZC Zipcode,
9) PDC Parsed Domain Items 1st level, 2nd level, 3rd level parse domain items

AAD Table **412** (identifies active advertisers)

1) BL BudgetLeft Current agent's budget remaining
2) CTL ClickThrusLeft Current click-through count remaining (number)
3) VL ViewsLeft Current exposure count remaining (number)
4) TE Time Expired Time expired (i.e. agent is "dead" or expired if not 0)
5) AA An identification of the bidding agent

VOD memory area **415**: This is a data communication structure in memory that facilitates passing data between objects. When a view-op is received, data is placed in the VOD area and then transmitted to the bidding agents. As an example, the following data can be placed in the VOD for transmission to the bidding agents.

1) Current Viewer Data
   - CO Cookie—gives information about the viewer that initiated the view-op.
   - EA Email Addr. of viewer that initiated the view-op.
   - C I/Code of viewer that initiated the view-op.
   - TS TimeStamp
   - Last Seen Time Stamp
   - IP Internet Protocol information
   - Full Domain Name (e.g. "sales.gm.uk")
   - Parsed Domain Name (e.g. Top="uk", 2nd="gm", 3rd= "sales")
   - I/CODE plus associated data
   - Zipcode*
   - BT Browser type (e.g. "Mozilla/Unix 4.0")
   - VO View Op ID
   - CT Content Type, Identifies a particular type of ad that site will accept.
2) Data About Advertisers
   - Original and Current budget
   - Original and Current Views budget
   - Original and Current Click thru budget
   - Time-Start/End
   - advertiser ID
3) Site Data
   - Keywords which appear on site
   - Site Page Ad Minimum Price
   - Accepts content List (what will site accept e.g. java, gif; sizes)
   - Site Owner Name
   - Site URL

Site Title
Site Intra Page Title

4) Historic and other data from data base **16**B: This is the VODX area **415**A: This is a subset of the VOD structure and it is a subset of data that is in the CUD, MD, HUD and SOD. The data in the VODX is transmitted to the bidding agents on each view-op. The data placed in the VODX can for example be::

a) CUD Record Portions: Portions of CUD that exist such as domain, browser, I/code relative to a viewer associated with a view-op.

b) 100 SOD records where SOD.WS.SP=VOD.WS.SP That is, where site page and web site in SOD equal site page and web site in the VOD.

c) 100 SOD records where Customer ID (i.e. I/Code) in SOD equals Customer ID in VOD That is, sold view-op records for this Viewer.

d) 100 HUD records: most recent records for this CU, WS and SP.

In the above example, the historical data is in units of one hundred records. It should be understood that the number of historical records sent to the bidding agents, is established by determining the type of specification which advertisers want to put in proposed bids. If advertisers want to base the decision on whether or not to submit an actual bid on the data in more than 100 historical records, the number of historical records placed in the VOD must be larger than 100. Alternatively, in a low cost system which has a limited amount of memory, and relatively slow speed communication, the data selected for inclusion in the VOD could be less than the data listed above.

The data in the VOD is provided to the bidding agent **30** at every view-op. The bidding agents **30** can use this information to make a buy decision by comparing the criteria specified in a proposed bid with the characteristics of a view-op. All of the data that is listed above will not be available for each view-op. If certain data (ire. data in a particular field) is not available relative to a particular view-op and a proposed bid requires that the data in the particular field have a particular value, no actual bid will be submitted by the bidding agent when the proposed bid is evaluated. The list of information or data in the VOD as given above is illustrative and any available information which advertisers feel is relevant to making buy decisions can be provided.

Some of the data in tables **16**B is collected as the system operates. Other information such as information about viewers can be purchased from commercial information providers and periodically inserted into the tables **16**B from an external connection.

On each view-op, that is, when each view-op occurs, bidding information is presented to each of the bidding agents **30**. When a bidding agent **30** receives information about a view-op, it evaluates the view op with respect to the criteria specified in a particular proposed bid and the bidding agent then either does nothing or returns to server **320** a bid with a price and an identification of an ad to display if the bid is accepted. When a bidding agent receives information about a view-op each bidding agent **30** performs comparison operations such as those shown in block diagram form in FIG. **5**.

The bidding agents may be computer programs written in conventional computer languages. For example a bidding agent **30** may be a program in interpreted form, in script language (for evaluating proposed bids that are in Ad Script form) or a bidding agent may be a previously compiled program. The exact form of the bidding agents is not particularly relevant to the present invention provided that the bidding agent perform comparison operations such as those shown in FIG. **5**. It is also noted that the bidding agents may be complex computer programs that perform various complex comparison operations in addition to or in place of the operations shown in FIG. **5**. However, in the preferred embodiment of the invention, the bidding agents are simple conventional computer programs that perform the type of comparison operations shown in FIG. **5**.

During the normal operation of the system, the process begins upon receipt of a view-op from the browser **11**. Upon receipt of a view-op the system does the following:

1) An attempt is made to identify the viewer via HTTP connect information. The system seeks to determine if this viewer has been seen before. This is done using conventional and well know HTTP protocol techniques, the data in data base **16**B and conventional data base technology.

2) The data concerning the viewer is used to update the table's Current Viewer Data (table **410**) relative to this view-op's viewer.

3) A view-op object (VOD **415**) is transmitted to each bidding agent **30**.

4) The bidding agents **30** determine if the view-op meets the requirements of various proposed bids.

5) Bids are collected from the bidding agents **30** and a determination is made as to the winning bid.

6) The winning bid includes an ad index identifying the ad to be displayed. This ad index which identifies an ad in table **16**A is transmitted to the web server **310** and the appropriate ad is sent to the browser **11**.

7) The tables **16**B are updated as to the view-op just bought (as to all view-op data of the just sold item including Historic Viewer Data such as Site, Viewer, Time seeing this exposure, etc.).

8) Log and billing information is transmitted to a log and billing unit.

Time Path: The following describes the time sequence of operations that occur when a HTTP view-op request arrives from the web server **310**. This can be a multi-threaded operation, that is, multiple requests might be processed simultaneously; they each maintain their own context and depend on the basic operating system (OS) for time slicing. This describes the time sequence for processing one view-op request. The following description uses symbolic values for time.

Time0:

HTTP view-op request packet received

Extract HTTP variables from HTTP request:

HTTP Query String (PATH_INFO) WS SP
HTTP_VIEWER_AGENT
HTTP_ACCEPT
REMOTE_HOST==domain
REMOTE_ADDR (IP)
REMOTE_VIEWER
REMOTE_IDENT
HTTP_REFER

Time1:

Lookup in CUD and try to match viewer
If success save CU and update Last Seen TimeStamp
If failure

Create new CU;

insert a new CUD record

Time 2:

Create & build VOD object (contains view-op data for bidding agents) for the view-op.

Time 3:

Lookup last N (i.e. 100) SOD records for CU, and save in VOD

Time 4:

Lookup last N (i.e. 100) HUD records for CU.SW.SP, save in VOD

Time 5:

Remember VO ID and initiate a time-out.

Time 6:

Transmit VOD to all bidding agents.

After the VOD data is transmitted to the bidding agents **30**, the bidding agents **30** evaluate proposed bids and if appropriate sent messages (bids) to view server **320**. These messages will be bid object data (bid price and ad ID). View server **320** collects the bids and selects the highest bid. (This is done by bid selection logic **16**C in view server **320** which compares each bid received with the current winner of the bid compete process until no further bids are received).

Time 7:

Transmit winning ad index (that is the ad index from the winning bid) to web server **310**. The ad-index indicates which of the ads in table **16**A is to be transmitted to browser **11**.

Time 8:

Update table **16**B (as to the view-op just bought);

Time 9:

Insert in SOD view-op Data (as to all view-op data of the just sold item);

Time 10:

Update or Insert Historic Viewer Data (as to Site, Viewer, Time seeing this exposure)

Time 11:

Transmit Log/Billing information to the Log and billing unit **320**A.

Proposed bids are submitted to bidding agents **30** by bid input unit **18**. Each proposed bid, which is submitted in the form of a programming Form Object, contains data fields such as the data fields listed below. A particular proposed bid may not have data in each of the fields of the associated Form Object Furthermore one proposed bid may contain multiple Form Objects. That is, an advertiser may submit multiple form objects at multiple levels. For example, an advertiser may specify a level one proposal of five cents if one particular set of criteria are met and a level two proposal of four cents if other criteria are met. Each proposed bid (i.e. each form object) may contain a wide range of criteria that must be satisfied if an actual bid is to be placed. The criteria may be very stringent in a situation where the proposed bid is high and the advertiser wants to reach only a very select group of viewers. On the other hand the criteria may be loose if the bid is low and the advertiser wants to reach a large number of viewers who meet only a minimum set of criteria. For example, a proposed bid might have the single criteria such as that the view-op is from a viewer that is using the "Netscape browser". Alternatively a proposed bid might specify values for items "a", "b", "c", "e", "g", "h" and "i" listed below and specify that these values must be met before a bid is submitted for this advertiser.

Another example is that a bid might specify a set of criteria and a list of ads that are to be displayed in sequence each time a particular viewer who meets the criteria is encountered. Such a list is referred to as a "rotation" of ads. A proposed bid might also specify that after all the ads in a rotation are displayed to a viewer, there should be a specified delay before the viewer is again shown the ads in the rotation.

As an example, each form object may have the following fields (naturally it should be understood that these are merely illustrative and the number and description of actual fields is merely limited by the advertisers desires concerning what criteria the advertiser cares to specify in a proposed bid.):

a) Frequency: that is, the number of Ad serves for one unique viewer of this ad

b) Include sites list (those sites that are acceptable to the advertiser)

c) Exclude sites list (those sites that are not acceptable to the advertiser)

d) Maximum bid . . . (in no event can the bid be larger than this amount)

e) Keywords for site (words that must be in the site if a bid is to be submitted)

f) Keywords for site-page (words that must be on the page)

g) Times: Dayparts/Weekparts (when can ad be placed)

h) Viewer OS (operating system viewer must have)

i) Viewer Zipcode

j) Viewer US State

k) Viewer Domain (.com, .edu, .gov, mil, org)

l) Viewer ISP

m) Viewer Country

n) Viewer SIC code

o) Viewer # of employees

p) Viewer Annual Revenues.

q) Viewer Browser (what browser viewer must have)

r) Inter-ad Delay (minimum time between placement of ads to a particular viewer)

s) Rotation Delay (delay between placement of ads which are part of a series)

t) List of ads in a rotation . . . (a list of ads that are placed in sequence, see example below)

u) Other (Other criteria that advertiser may care to specify. Naturally, the bidding agent which receives a proposed bid must be programmed to compare the criteria specified in a bid to the data available concerning a view-op)

Bidding input server **18** includes a conventional data input program that allows entry of proposed bids with fields such as those listed the above. Each proposed bid is transmitted to a bidding agent **30**. There is one bidding agent **30** for each proposed bid that is submitted. A system may include thousands of bidding agent programs **30**. It should be understood that bidding agents **30** are conventional computer programs that evaluate proposed bids against the characteristics of a view-op to determine if a bid should be submitted to view server **320**.

Bid input system **18** also transmits information to view server **320**. For example the budget and identity of each advertiser is transmitted from bid input server **18** to AAD table **412**. Entry, transfer and storage of such information is done using conventional data base techniques.

In the particular embodiment of the invention shown herein, the bidding agent programs **30** perform the operations shown in FIG. **5** relative to each level of each proposed

bid. As previously indicated each proposed bid may include several bid levels. All of the above elements are repeated in each element. The process shown in FIG. **5** is executed for each level of each proposed bid. The Level 0 level is "run" first, the Level 1 next, and so on. This means that level 0 requirements are evaluated first. If they succeed, the bid is placed as dictated in that level's data. Otherwise Level 1 requirements are checked, and so on. Each level's requirements can be totally independent, but preferably they should get successively less strict, such that the proposed bid value decreases.

The program shown in FIG. **5** is executed for every view-op. It first uses the specifications for Level 0, then on "NEXT," or a failure to meet criteria for a level, it starts over with the next level's criteria. The proposed bid evaluation program shown in FIG. **5** performs tests such as the tests shown below upon a proposed bid prior to submitting an actual bid to view server **320**. It should be understood that the test below are merely illustrative and any variety of tests can be performed in comparing the characteristics of a view-op with the specifications in a proposed bid. The tests required is limited solely by the desires of the advertiser. Programming for performing such tests and comparisons between specified characteristics of a view-op and specifications in a proposed bid is conventional programming. In the illustration given in FIG. **5**, the following tests are performed by the bidding agent program.

Block **501**: If Include site List is specified and WS (Web Site ID) is not in Include site List go to DONE, if not go to next test.

Block **502**: If Exclude site List specified and WS (Web Site ID) in Exclude site List go to DONE, if not go to next test.

Block **503**: If Browser specified and no match with Browser being used, go to DONE, if not go to next test.

Block **504**: If MIN site bid <MAX Agent bid go to DONE, if not go to next test (note that a web site can specify a minimum amount (Min site bid) that the site will accept for displaying an advertisement).

Block **505**: If Viewer OS specified and no match go to DONE, if not go to next test.

Block **506**: If Viewer Zipcode specified and no match go to DONE, if not go to next test

Block **507**: If Viewer US State specified and no match go to DONE, if not go to next test.

Block **508**: If Viewer Domain specified and no match go to DONE, if not go to next test

Block **509**: If Viewer ISP specified and no match go to DONE, if not go to next test.

Block **510**: If Viewer Country specified and no match go to DONE, if not go to next test.

Block **511**: If Viewer SIC code specified and no match go to DONE, if not go to next test.

Block **512**: If Viewer # of employees specified and no match go to DONE, if not go to next test.

Block **513**: If Viewer Annual Revenues specified and no match go to DONE, if not go to next test.

Block **514**: If Time List specified and current time not in Time List go to DONE, if not go to next test.

Block **515**: If Keywords list specified and Keywords not in Site Keywords List go to DONE, if not go to next test.

Block **516**: If MAX Agent click-through bid specified and MIN site click-through bid then if MIN site click-through bid<MAX, Agent click-through bid go to DONE, if not go to next test.

Block **517**: If No CT (content type) match in Ad list go to DONE, if not go to next test.

Block **518**: If InterAd Time interval specified then Compute (block **519**) (scan for) LastAdViewer for this CU (Last time this viewer saw an ad fulfilled from this agent) from SOD List of 100.

Block **520**: If InterAd Time Interval and if TimeStamp of LastAdViewer<Inter Ad Time Interval go to done, if not go to next test.

Block **521**: If Frequency specified perform block **522**, that is, Count (scan) SOD per CU for ads sold by this agent. (Block **522**A) If this count>Frequency go to DONE, if not go to next test.

Block **523** If no LastAdViewer (no record of serving this Viewer) go to done, if not go to next test.

Block **523**A if InterAdTimeInterval specified then if TimeStamp of Last Ad Serve<Inter Ad Time Interval go to DONE, if not go to next step.

Block **524**: TRY TO BUY AD with the following steps:

Block **525**: Select Next Ad to Serve based on CT match, LastAdViewer or Last Ad Served

Block **526**: Submit BID: Include in the bid submitted to view server **320**, the ad ID in the form of an index that can be used by web server **310** to select a bid from ad table **16**A for display.

Block **528**: The process is DONE

The process that the web server **320** follows when it receives a view-op is shown in FIGS. **6**A to **6**E. The process includes the following steps:

Begin Process FIG. **6**A:

Block **601**: The process begins when the view server **320** receives aViewOpDrive() call. That is when Raw view-op Data is sent to view server **320**.

Block **605**: Establish an area in memory for VOD structure (we will write to this area)

Block **606**: Parse the Domain

Block **607**: Parse Accepts (map this to CT)

Block **608**: Parse the Browser field

Block **609**: Write SP, WS, and Cookie to the VOD

Block **610**: Create New view-op record in SOD

Block **611**: Write available information about view-op to new record in SOD

Block **612**: Write TS to SOD

Block **614**: Check to see If Cookie=0 (Is there a Cookie in the request)

Block **615**: If Cookie=0 select on CUD where there is a Cookie match

Block **616**: If Cookie not=0 Select on CUD using other heuristics of viewer

Block **617**: Set (or clear) VOD.CU

Block **620**: check if there is a current viewer.

Block **621**: if CU=0 Insert new viewer in CUD

Block **623** Insert the new CUD rec. in CUD

Block **622**: Write CUD record to VOD

Block **630**: Select from SOD where CU=VOD.CU for 100 order by TS into VOD and go to next procedure. This selects the 100 most current purchases that were presented to the particular viewer. Write to VOD

Block **631**: Select from HUD where CU,SP,SW all match for 100 most recent records in VOD. Write to VOD

Block **632**: Select from MD for every active budget. Write to VOD (Write any other data needed by bidding agents to VOD)

Block **634** Send VOD data to Bidding Agents. Each bidding agent run its logic (see FIG. **5**)

Block **635**: Bidding agents send result to View Server **320**

(This following is the process where bid selection logic **16**C in view server **620** picks the best bid)

Block **641**: Pick maximum bid

Block **642**: Update AAD data

Block **643** Check for expiration of bidding agent in AAD table

Block **644**: Set VOD info to winner and go to next procedure.

Block **645**: check if CUD exceeds its maximum.

Block **646** if block **645** answer is yes, Select oldest CUD record, Post it to a CUD archive file

Block **650**: check if CUD>MAXSIZE.

Block **651**: If block **650** answer is yes, Delete oldest CUD record and proceed.

Block **653**: Compose the SOD record from VOD data.

Block **654**: Insert SOD record.

Block **655**: check if count of SOD records>MAXSIZE: if no go to next procedure.

Block **656**: If block **655** answer is yes, Select oldest SOD record, POST it to an archive file and go to next procedure.

Block **660**: check if count of SOD records>MAXSIZE, if answer is no, go to next procedure

Block **661**: If answer to block **660** is yes, delete oldest SOD record.

Block **662**: Select from HUD for CU, SP, SW, current time interval. That is, select for this current viewer, for this bidding agent, on this web site, for this time interval.

Block **663**: Write data to VOD and go to next procedure.

Block **664**, Check if HUD Rec==0 That is, if HUD record was found

Block **665**, If no HUD record found, Insert New HUD rec.

Block **666**: If HUD record was found, Update existing HUD rec.

Block **670**: check if new Hud Rec was inserted and count>MAXSIZE.

Block **671**: If answer to block **670** is yes, Delete oldest HUD rec.

Block **672**: Create Accounting Rec. from VOD data.

Block **673**: POST the data to an archive file

Block **674**: Post ad info to web server **310**. That is, tell web server **310** which ad to display.

Block **675**: Dequeue, Delete the VOD. This is the end of the procedure. It starts again at the next view-op.

The series of steps shown in FIGS. **6**A to **6**E are the procedural operation performed by the view server **320**. These can be programmed using any of the conventional programming languages such as SQL. The particular computer used to perform the program is of no particular consequence so long as it is fast enough to provide a reasonable degree of performance. In order to speed the operation of the system if there is a large number of bidding agents **30**, the bid selection logic **16**C may be implemented using hard wired logical circuitry rather than by utilizing a computer program. The programming or circuitry in bid selection logic **16**C is conventional. It merely receives the bids from each of the bidding agents **30** and selects the highest bid and then transfers the ad index for this bid to web server **310** and transfers other information about the bid to the data tables **16**B and to log and billing unit **320**A.

Web Server **310**: The web server **310** is a conventional web server which is programmed to provide two main functions:

1) Answer and hold the state of each HTTP request; deliver the view-op to the system kernel in view server **320**; receive the system kernel reply and deliver the content. This is a multi-task operation. The contents (the IP data) of each view op, along with its type (either a request for content or a click-through) are delivered to the view server **320**. This communication is through shared memory or alternatively it may be through a conventional inter-computer network.

2) Install and remove Ad content separately, and asynchronously. Service requests to install (store) and remove (delete) ads from data base **16**A. On an install, the web server returns a WC, a handle or index to the location of the ad. WCs should be unique for the life of the system. This is done by a conventional data base program.

Bid input server **18** is a conventional data base server which accepts information and deliver; it to the tables in view server **320** and to bidding agents **30**. Bid input server **18** provides a data input mechanism for the system. Data table 18-T in bid input server **18** stores the identity of each of the advertisers and the particular bidding agents **30** to which bids from that advertiser should be sent. Bidding agents **30** can all be identical or alternatively some may have capability for evaluating more complex criteria in proposed bids. The data table **18**T stores information which indicates which bidding agent should receive proposed bids from which advertisers. Bid input Server **18** is a conventional data base input unit.

The log and billing unit **320**A is a conventional data base program that provides conventional log and billing functions. As concerning users and web sites becomes old and stale, it is transmitted to an archive in log and billing unit **320**A. A log of all transactions that takes place in the system is also maintained by unit **320**A. This is done using conventional programming techniques.

In the figures, only one web browser **11** is shown. It should be understood that web browser **11** is merely representative of the web browsers connected to the Internet world wide web. Web server **310** is connected to the Internet and hence it can receive HTML references from any of the millions of browsers connected to the Internet. Web browser **11** is merely illustrative of one of the browsers connected to the Internet.

The specifics of the various data bases, the specifics of the various fields in the data bases, and the specifics of the form used to submit a bid, the parameters that are considered in evaluating bids, as shown herein are illustrative only and various changes in the data bases, the fields and the parameters along with changes in the operation of these details of the system could be made without departing from the spirit and scope of the invention.

Specific data can be introduced into data base **16**B in a number of ways. Some of the data is collected as previously described as the system operates. Other data can be viewer registration data, that is data obtained when viewer register at related web sites. Likewise viewer history data in data base **16**B can be collected as the system operates or it can be purchased from commercial sources and entered into data base **16**B as a batch of information. Web site demographic data can be collected from commercially available sources and entered into data base **16**D.

The specific data collected in data base **16**B is determined by the criteria that advertisers want to establish in proposed bids. Data base **16**B can store any type of information that advertisers care to specify in proposed bids. Any data that advertisers want to use in setting specifications in proposed bids can be stored in tables **16**B using conventional data base technology. This data is transferred to the VOD area of memory and to the bidding agents **30** when a view-op occurs. Bidding agents **30** must be programmed to compare the data received from the VOD to the specifications in a proposed bid to determine if an actual bid should be submitted.

It is herein assumed that a viewer always accesses the world wide web using the same browser, so that the cookie

in a browser accurately reflects what a viewer has done. It is also assumed that only one viewer uses a particular browser, again so that the cookie in the browser accurately reflects what the particular viewer has done. If different individuals use different sign-on names with the same browser, or if different individuals who use the same browser otherwise identify themselves to the system, they can be assigned separate I/codes even though they use the same browser.

It is also noted that a system could combine the operation of the present invention with the operation of the prior art type of system where access to advertising on particular web sites is sold for a specified amount. An operator of the system could sell "pre-buys", that is, access to the view-ops that occur on a particular site and the operator could insure that a particular advertiser always has access to these view-ops as done by the prior art systems. This could be done by merely entering into the system proposed bids with a value that is the maximum allowed by the system for those particular view-ops that are sold as pre-buys.

An alternative embodiment of the invention is shown in FIG. **7**. The system shown in FIG. **7** is designed to minimize latency due to Internet topographical distance between units.

The embodiment shown in FIG. **7** is a geographically distributed system which includes three systems **716**A, **716**B and **716**C each of which are identical to systems **16** shown in FIGS. **1** and **3**. Each of the systems **716**A, **716**B, and **716**C have associated bidding agents **730**A, **730**B and **730**C. Each of the systems **716**A, **716**B and **7126**C is located a different geographic area.

Client browser **711** sends web HTML references (such as those sent from browser **11** to web server **310**) to a commercial Internet service provider (an ISP) **712**. The ISP in turn sends an HTML reference to the system **716**A, **716**B or **716**C which is "topographically" closest to the browser **711**. For example, the three systems **716**A, **716**B and **716**C could be located on different continents, one in the U.S., one in Europe and one in Japan. With the system shown in FIG. **7**, HTML references from browsers in Europe would be directed to the system in Europe, HTML references from browsers in the U.S. would be directed to the system in the U.S. etc. The bid input unit **718** sends each proposed bid to bidding agents **730** associated with each system. Thus, the systems **716**A, **716**B and **716**C evaluate each proposed bid against the particular view-ops that are directed to each particular system. While for purposes of illustration, three systems **716**A, **716**B and **716**C are shown, any number of such systems could be connected in an overall network of systems.

While the invention has been shown and described with reference to preferred embodiments thereof, it should be understood that other embodiments are possible and that various changes in form and detail may be made without departing from the spirit of the invention. The scope of the invention is limited solely by the appended claims.

What is claimed is:

1. A system for supplying advertisements for display during a series of viewing opportunities (view-ops) which occur during the display of web pages on the Internet world wide web, each of said view-ops having specific characteristics,

a plurality of bidding agents,

a server for providing information concerning each view-op to said bidding agents,

a bid input system for providing proposed bids to said bidding agents, each proposed bid including, a reference to a specific advertisement, specifications of a desired view-op and a monetary amount which will be paid for displaying said specific advertisement in response to a view-op which meets said specifications of a desired view-op,

each of said bidding agent including logic for submitting a bid and a reference to a specific advertisement to said server if the information concerning a view-op satisfies the specifications of a desired view-op contained in a proposed bid, and

said server including bid selection logic for selecting the highest bid submitted by a bidding agent and for transferring the advertisement referenced in said highest bid to the web site presenting said view-op.

2. A server system for providing advertisements in response to HTML references from a web page, each HTML reference includes information identifying the source of said web page, said server system including,

a data base of advertisements,

a data base of viewer information including information concerning prior HTML references,

means for accepting proposed bids which specify a monetary amount for providing a particular advertisement in response to web page HTML references which satisfy specified criteria, said specified criteria including information included in said HTML reference and information from said data base of viewer information,

means for determining if a particular HTML reference satisfies said specified criteria,

means for selecting the highest bid which satisfies said specified criteria, and

means for responding to said HTML reference with the particular advertisement specified bit said selected bid.

3. A system for placing advertisements on web pages on the world wide web which are accessed by a viewer,

a first server which stores advertisements, said web pages having HTML references to said first server,

a data base of information on viewers,

bid input means for accepting bids to place advertisements on web pages which have particular characteristics and which are accessed by viewers having particular characteristics, and

bid selection means for selecting the highest bid for placement of an advertisement on a particular web page.

4. A system for displaying advertisements to viewers who access a web page comprising

a web server which stores a plurality of advertisements,

bid input means for providing to said system bids specifying characteristics of users and web sites where it is desired to display advertisements and a dollar bid for the right to display an advertisement on a site with the specified characteristics

a server system which includes means for evaluating bids, for selecting one of said advertisements in response to said bids and for designating to said web server which of said advertisements should be displayed,

whereby the particular advertisement that is displayed to a viewer is determined by a bidding process.

5. In an Internet which is operating according to the HTTP protocol, and which includes a browser for viewing web pages and for HTML referencing to remote servers,

a server which has stored therein a number of advertisements,

means for providing to said system bids for the opportunity to display advertisements on web pages which

have been accessed by a viewer having specified characteristics,

selection means for evaluating said bids and comparing them to the characteristics of a viewer that accesses a web page, said selection means including means for selecting the highest bid for a particular view-opportunity.

6. A method of placing advertisements on web pages on the world wide web which are accessed by a viewer utilizing a browser,

storing advertisements in a data base on a first server, said web pages having HTML references to said first server,

maintaining a data base of information on viewers,

accepting bids to place advertisements on web pages which have particular characteristics and which are accessed by viewers having particular characteristics,

selecting the highest bid for placement of an advertisement on a particular web page.

7. A system for placing advertisements on web pages on the world wide web, said web pages being accessed by viewers, each viewer utilizing a browser,

a first server which stores advertisements, said web pages having HTML references to said first server,

a data base of information on viewers and on the web sites that have been accessed by particular browsers,

bid input means for accepting bids to place advertisements on web pages which have particular characteristics and which are accessed by particular browsers which have been previously used to access web pages having particular characteristics,

bid selection means for selecting the highest bid for placement of an advertisement on a particular web page which has particular characteristics and which has been accessed by a browser which previously has accessed particular web sites.

8. The system recited in claim **7** where said world wide web is accessed by using HTTP protocol on the Internet.

9. A system for determining which advertisement to place on a web page that has been accessed by a viewer using a browser,

a first web server which has stored thereon advertisements, said web page having a HTML reference to said first web server,

a client server which provides means for entering bids to place particular advertisements on particular web pages which have particular characteristics and which are accessed by particular browsers which have previously accessed particular web pages,

a viewer data base which has information concerning which web pages have been accessed by particular browsers,

a view server which evaluates the bids which have been entered and selects the highest bid for displaying an advertisement on a particular web page.

10. The system recited in claim **9** including a server which includes means for checking bids to determine if web page meets the specifications in a particular bid.

11. The system recited in claim **9** wherein a determination of which advertisement to place on a particular web page in done in machine real time and said bids are entered in human real time.

12. The system in claim **9** wherein said viewer data base includes information about viewers.

13. A method for placing advertisements on web pages on the world wide web, said web pages being accessed by viewers, each viewer utilizing a browser,

storing advertisements on a first server, said web pages having HTML references to said first server,

storing a data base of information on viewers and on the web sites that have been accessed by particular browsers,

providing bids to place advertisements on web pages which have particular characteristics and which are accessed by particular browsers which have been previously used to access web pages having particular characteristics,

selecting the highest bid for placement of an advertisement on a particular web page which has particular characteristics and which has been accessed by a browser which previously has accessed particular web sites.

14. The system recited in claim **1** wherein each view-op has an associated viewer and said server includes a data base of information concerning viewers.

15. The system recited in claim **1** wherein said server includes a data base with information about web sites.

16. A computerized method for supplying and pricing electronic advertisements, comprising:

a. Storing client profile information in a computer database;

b. Providing the client profile information to advertisers;

c. Receiving electronic bids from said advertisers for specific advertisements to be presented to clients with matching client profile information;

d. Selecting the highest bid among the electronic bids received within a specified time period;

e. Transmitting the selected electronic advertisement to the matching clients;

f. Calculating the delivery fee for the selected advertisement; and

g. Generating and transmitting an advertising bill to the corresponding advertiser.

17. A computerized method for supplying and pricing electronic advertisements, comprising:

a. Storing client profile information in a computer database;

b. Providing the client profile information to advertisers;

c. Receiving electronic bids from said advertisers for specific advertisements to be presented to clients with matching client profile information;

d. Selecting the highest bid among the electronic bids received within a specified time period; and

e. Transmitting the selected electronic advertisement to the matching client.

* * * * *