US 20160299311A1

(19) United States

(12) Patent Application Publication

KAJI et al.

(10) Pub. No.: US 2016/0299311 A1

(43) Pub. Date: Oct. 13, 2016

(54) **FORMER, OPTICAL FIBER UNIT MANUFACTURING METHOD AND OPTICAL CABLE MANUFACTURING METHOD**

(71) Applicant: **FUJIKURA LTD.**, Koto-ku, Tokyo (JP)

(72) Inventors: **Tomoaki KAJI**, Sakura-shi (JP); **Daiki TAKEDA**, Sakura-shi (JP); **Satoru SHIOBARA**, Sakura-shi (JP); **Masayoshi YAMANAKA**, Sakura-shi (JP)

(73) Assignee: **FUJIKURA LTD.**, Koto-ku, Tokyo (JP)

(21) Appl. No.: **15/037,840**

(22) PCT Filed: **Mar. 24, 2014**

(86) PCT No.: **PCT/JP2014/058017**

§ 371 (c)(1),
(2) Date: **May 19, 2016**

(30) **Foreign Application Priority Data**

Jan. 10, 2014 (JP) 2014-003670

Publication Classification

(51) **Int. Cl.**

G02B 6/44	(2006.01)
B29C 63/02	(2006.01)
B29D 11/00	(2006.01)
B29C 63/10	(2006.01)

(52) **U.S. Cl.**

CPC ***G02B 6/4486*** (2013.01); ***B29C 63/105*** (2013.01); ***B29C 63/024*** (2013.01); ***B29D 11/00721*** (2013.01); *B29L 2011/0075* (2013.01)

(57) **ABSTRACT**

A former including: a guide pipe guiding an optical fiber bundle; a tape forming section forming a press-wrapping tape from a strip shape into a helical shape, while guiding the press-wrapping tape along a feed direction, the tape forming section including a curved section gradually curving the strip shaped press-wrapping tape while guiding the press-wrapping tape along the feed direction, and a helical section that is a helical tube shaped location further to a downstream side than a position where two edges of the curved section intersect with each other, the helical section causing two end portions of the press-wrapping tape that has been curved with the curved section to overlap and forming the press-wrapping tape into a helical shape, while guiding the press-wrapping tape along the feed direction, and gradually narrowing an external diameter of the helical shaped press-wrapping tape.

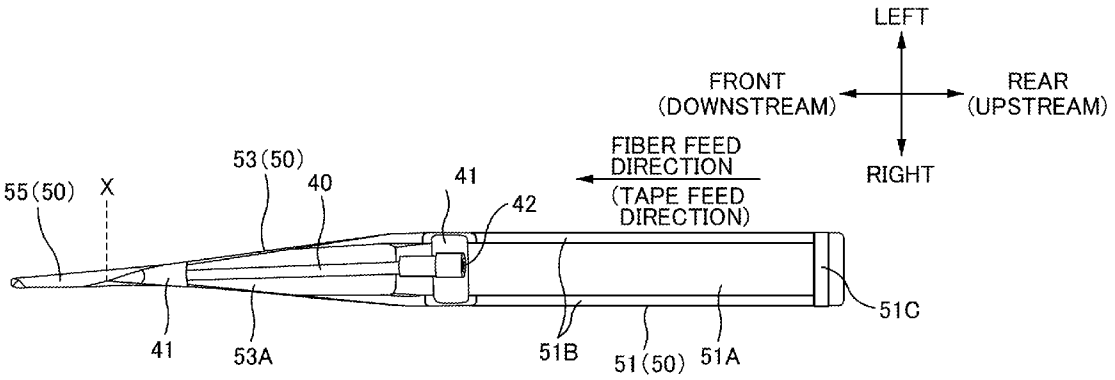

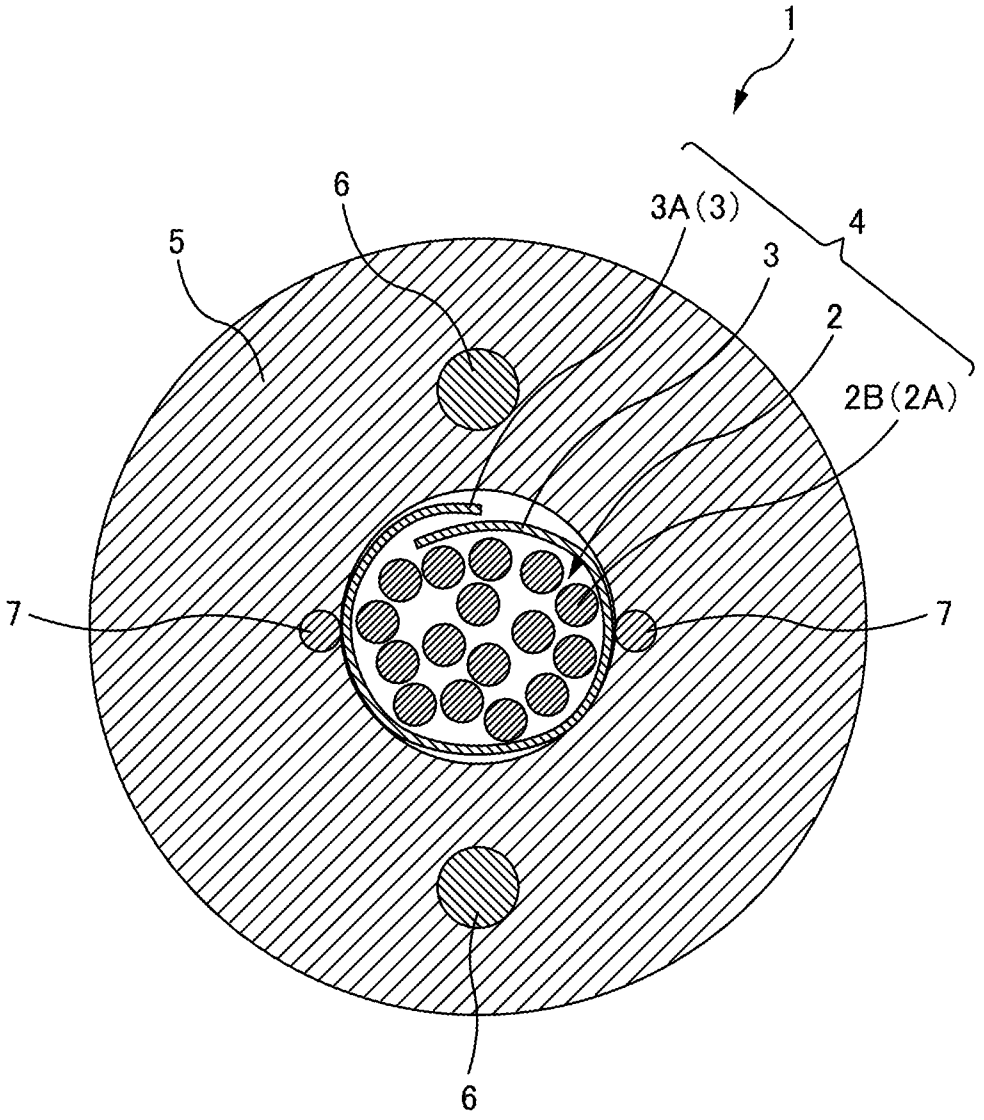

FIG. 1

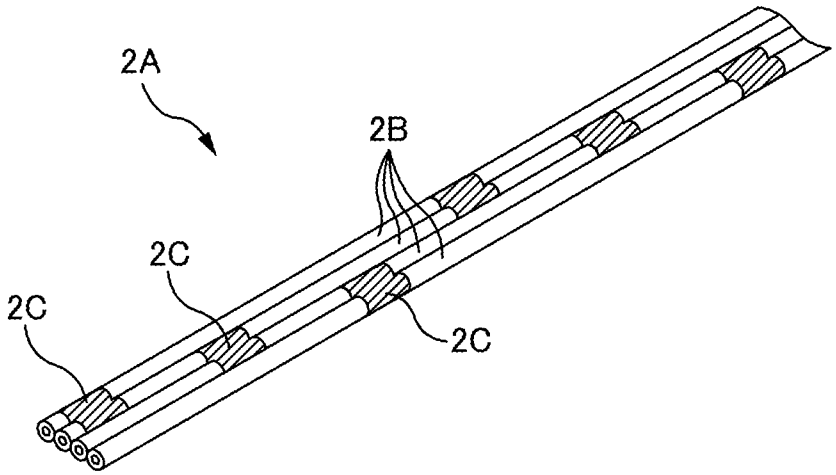

FIG. 2

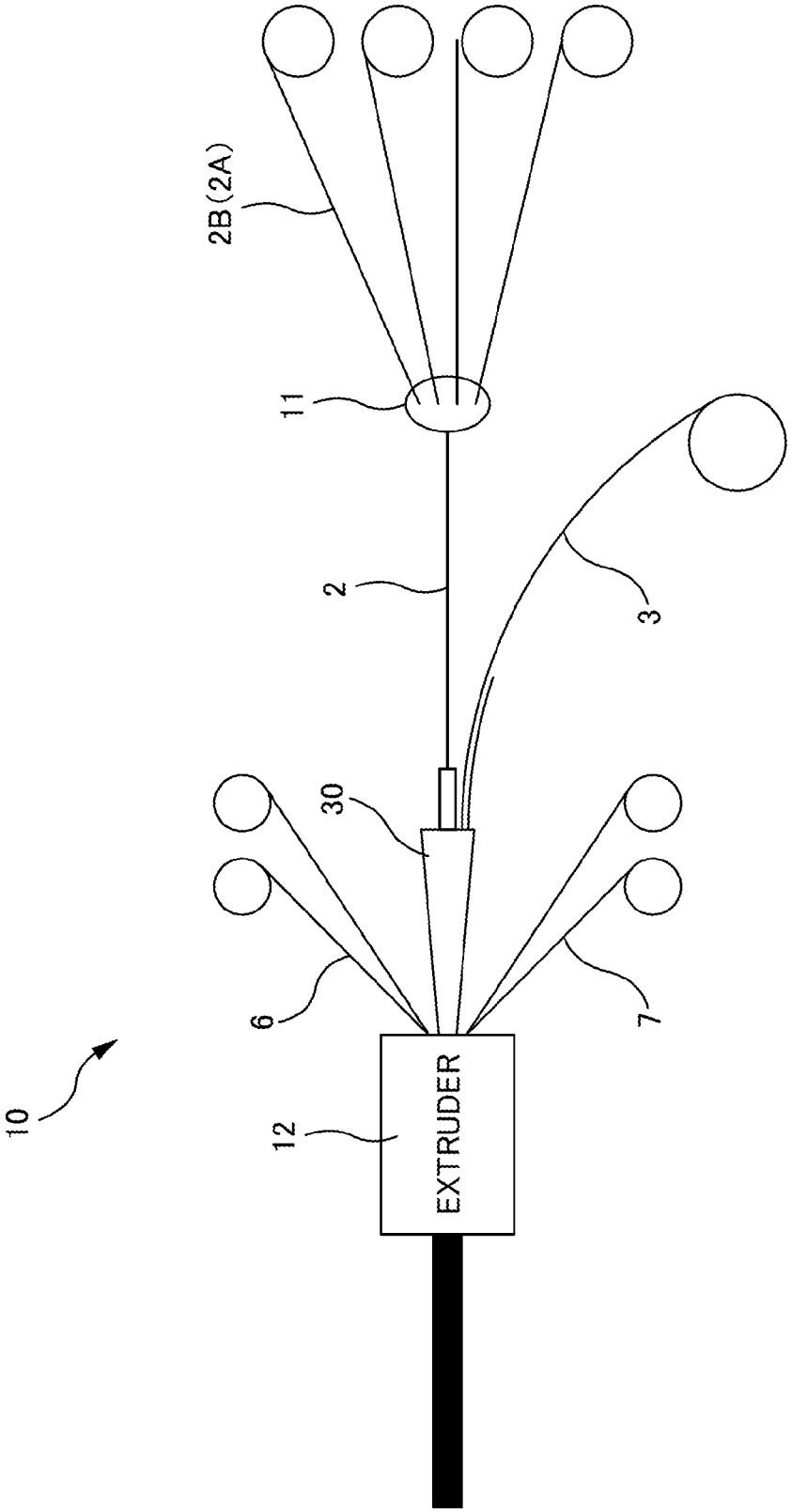

FIG. 3

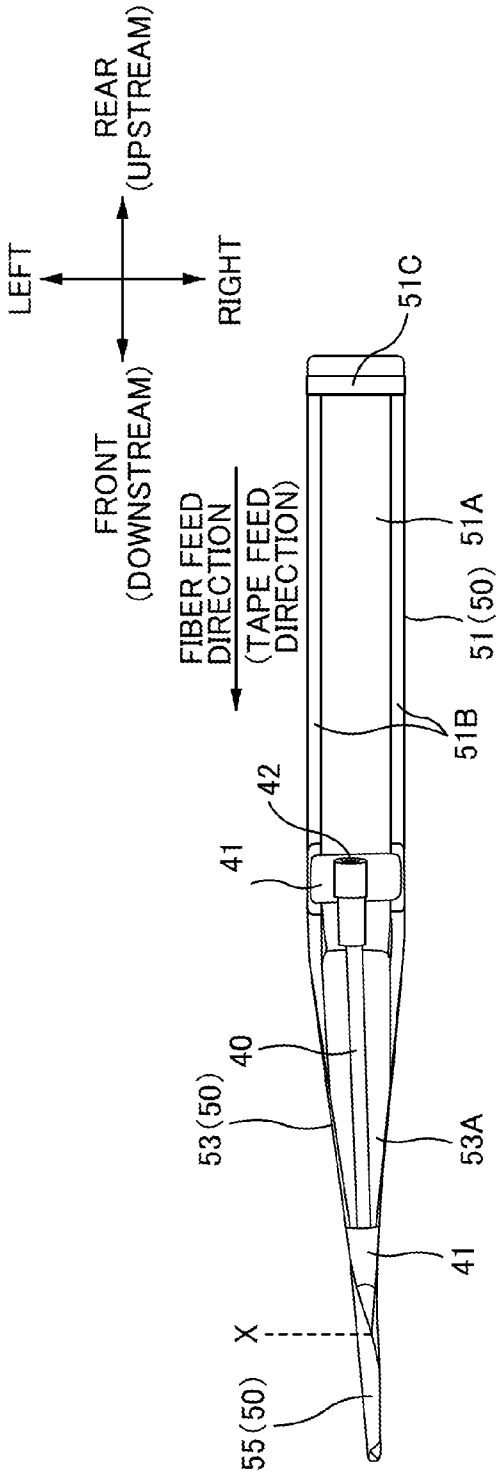
REAR
(UPSTREAM)
LEFT
RIGHT
FRONT
(DOWNSTREAM)
FIBER FEED
DIRECTION
(TAPE FEED
DIRECTION)
51C
51A
51(50)
51B
42
41
40
53(50)
53A
41
X
55(50)

FIG. 4A

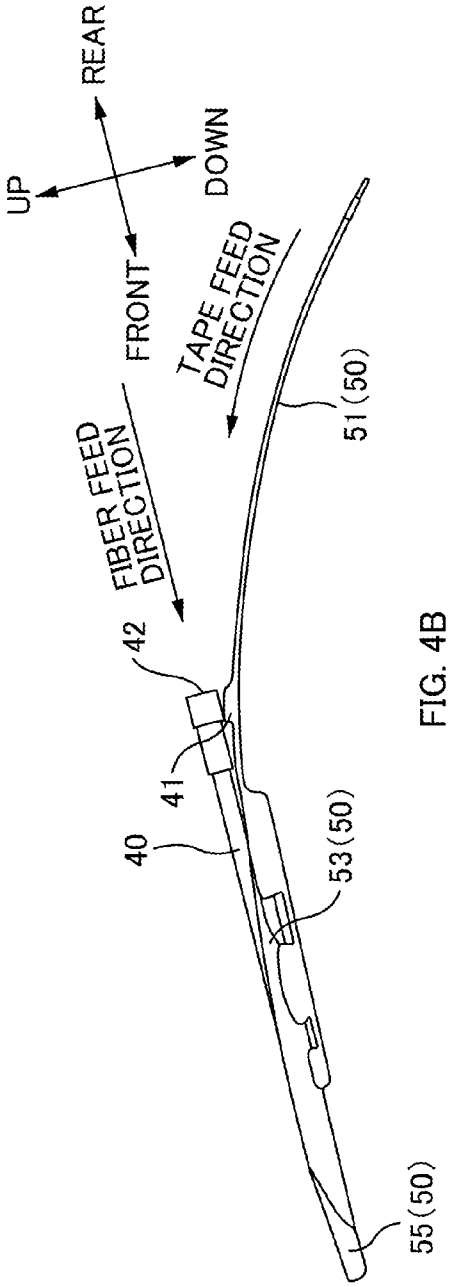
REAR
UP
DOWN
FRONT
TAPE FEED
DIRECTION
FIBER FEED
DIRECTION
51(50)
42
41
40
53(50)
55(50)

FIG. 4B

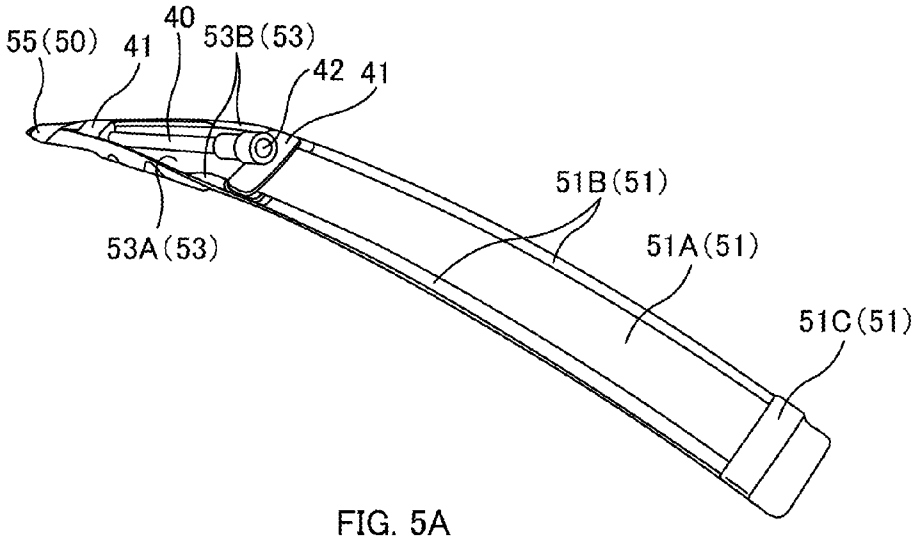

FIG. 5A

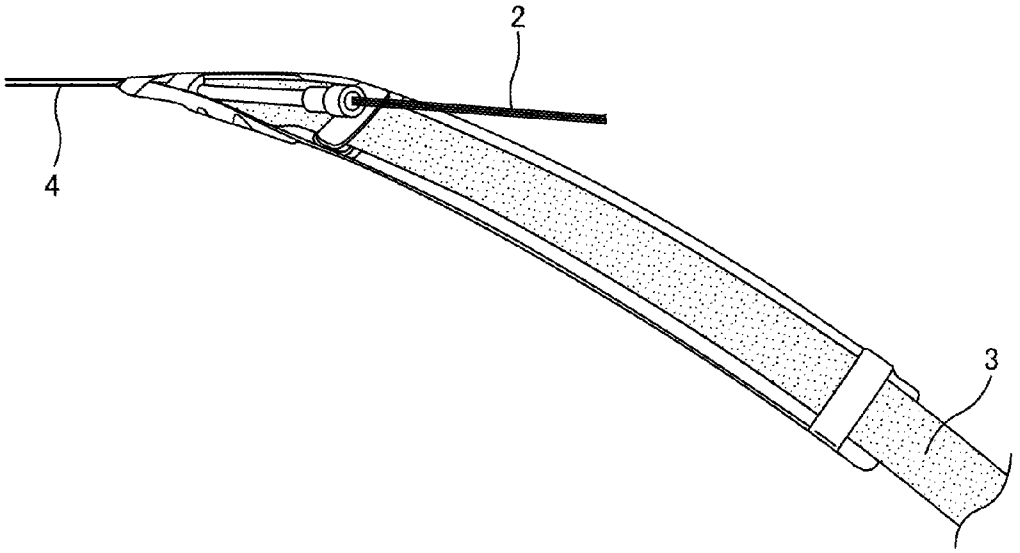

FIG. 5B

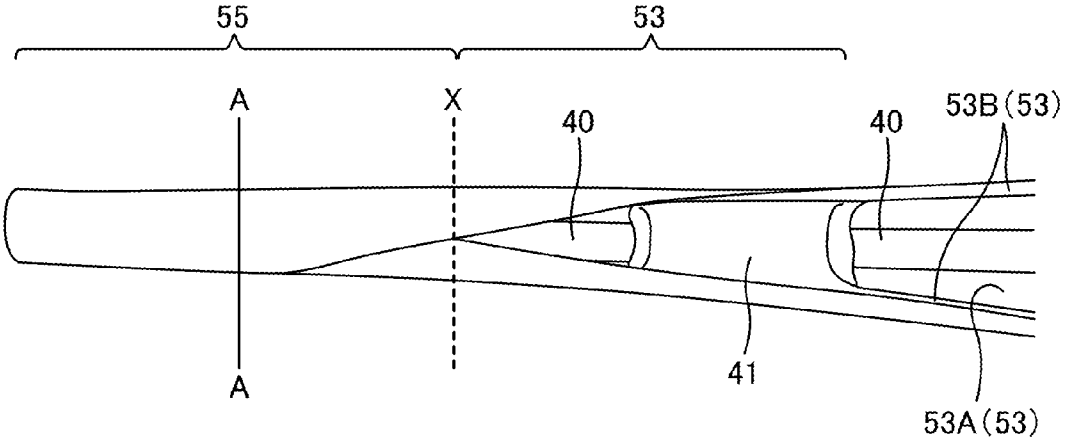

FIG. 6A

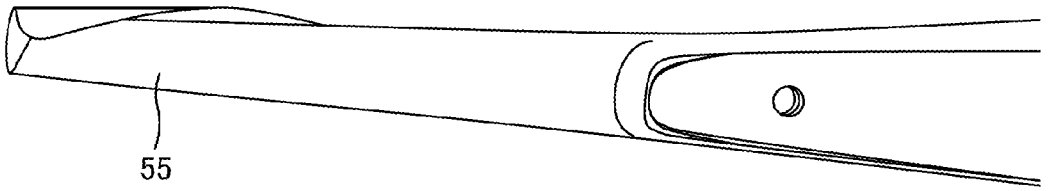

FIG. 6B

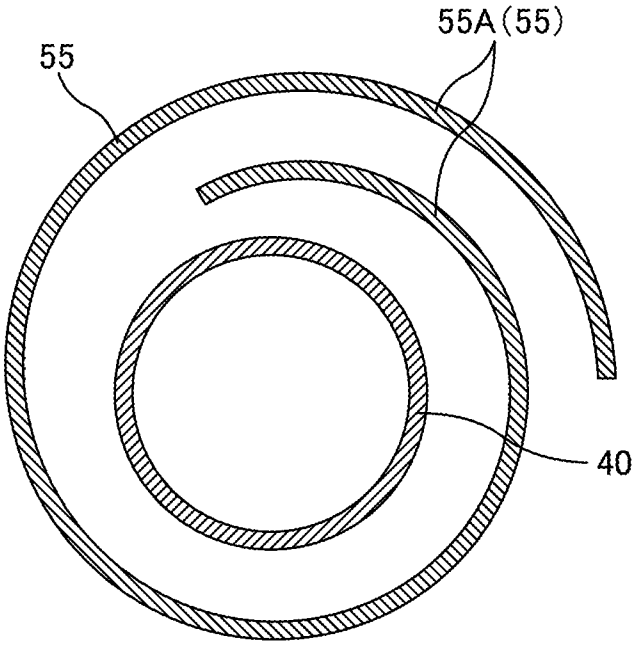

FIG. 7A

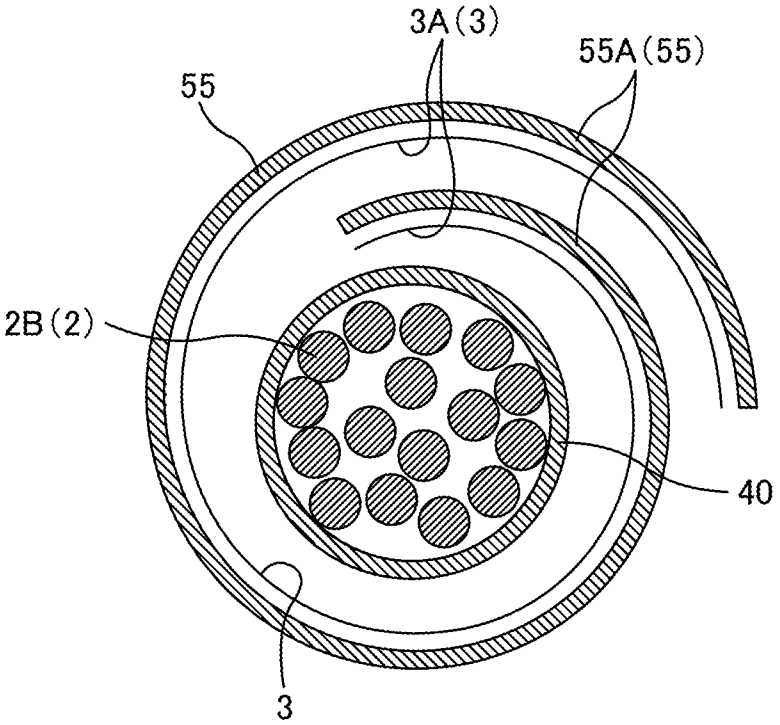

FIG. 7B

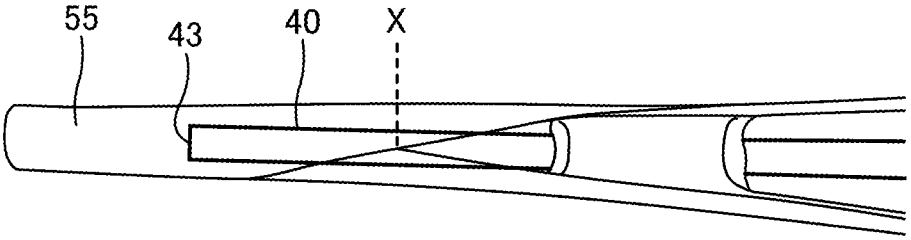

FIG. 8A

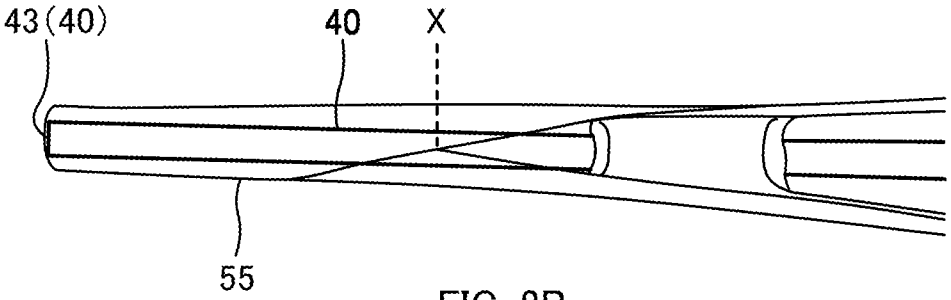

FIG. 8B

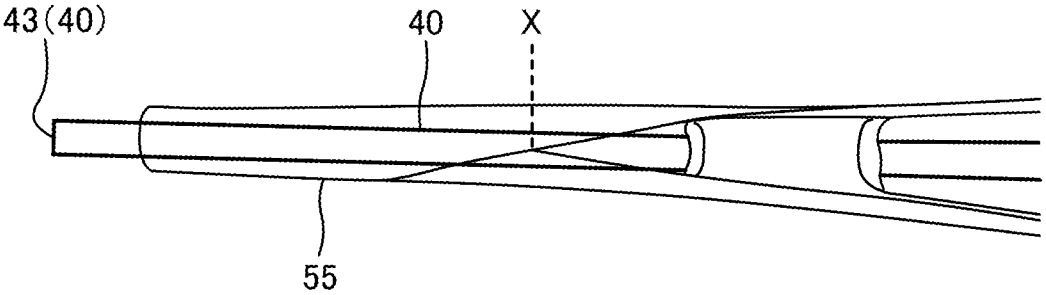

FIG. 8C

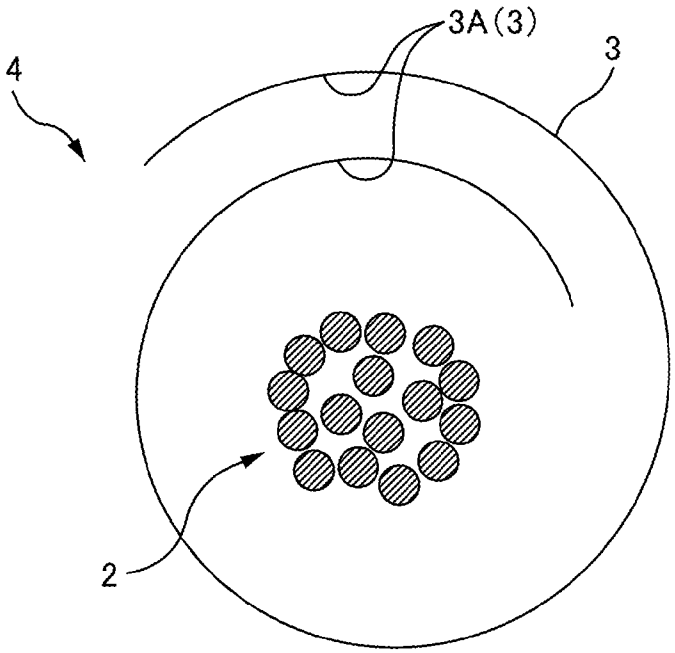

FIG. 9A

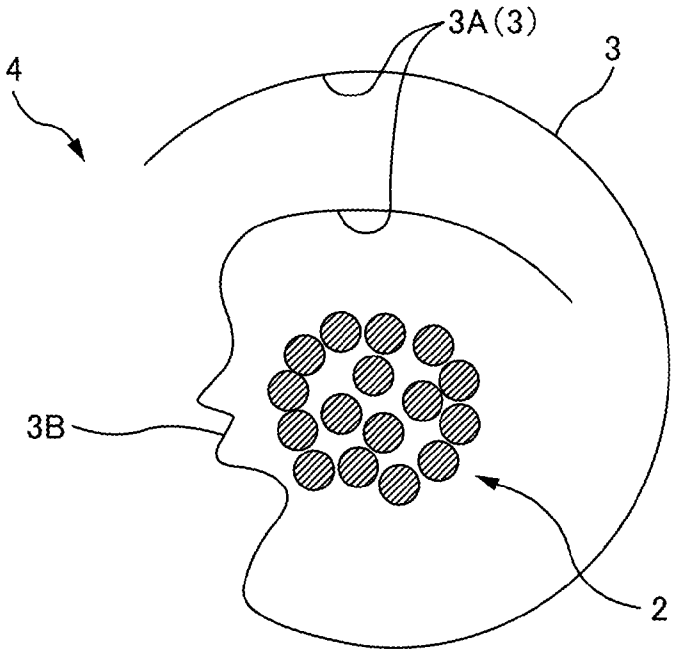

FIG. 9B

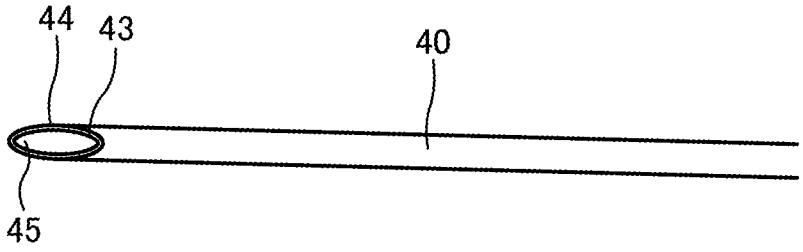

FIG. 10A

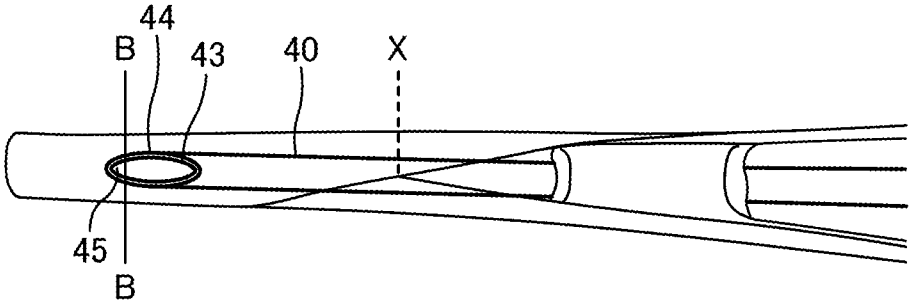

FIG. 10B

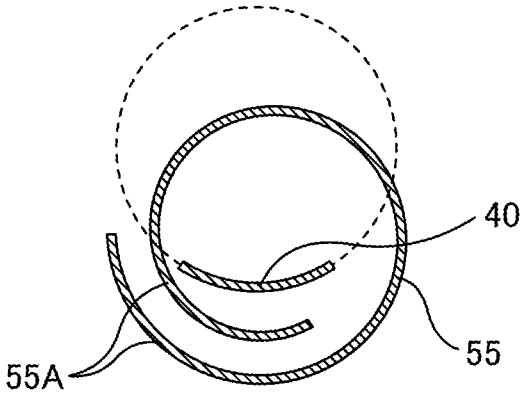

FIG. 10C

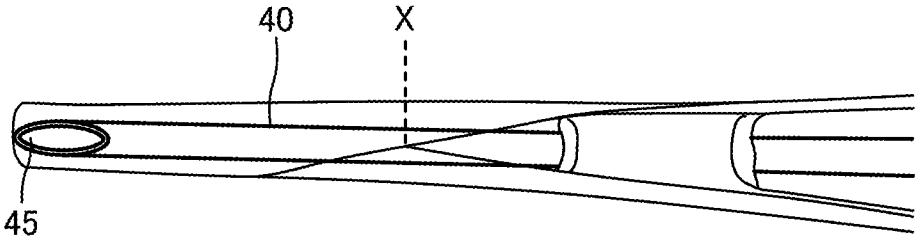

FIG. 11A

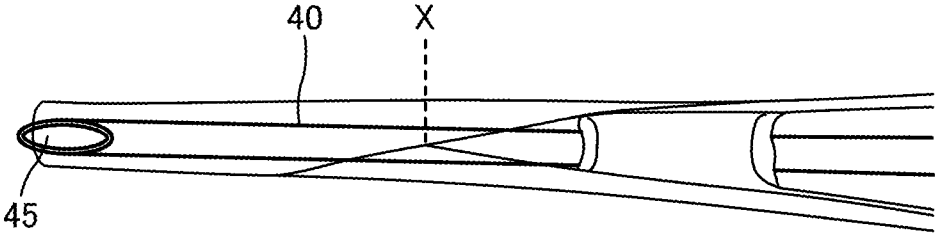

FIG. 11B

FORMER, OPTICAL FIBER UNIT MANUFACTURING METHOD AND OPTICAL CABLE MANUFACTURING METHOD

TECHNICAL FIELD

[0001] The present invention relates to a former, an optical fiber unit manufacturing method, and an optical cable manufacturing method.

BACKGROUND ART

[0002] Optical cables are known in which a plurality of optical fibers are disposed inside a press-wrapping tape processed into a helical shape (a circular cylinder shape). In Patent Literature 1, press-wrapping tape is formed into a helical shape by passing the press-wrapping tape through a former having a helical shaped groove including an overlap section.

[0003] Note that Patent Literature 2 and 3 also disclose formers (also referred to as tape formers) for forming press-wrapping tape.

CITATION LIST

Patent Literature

[0004] Patent Literature 1: JP 2013-101175 A

[0005] Patent Literature 2: JP H11-271581 A

[0006] Patent Literature 3: JP 2004-12916 A

SUMMARY OF INVENTION

Technical Problem

[0007] In Patent Literature 1, after a press-wrapping tape has been formed into a helical shape and imparted with a curl, the press-wrapping tape formed in a helical shape needs to be temporarily opened in order to house an optical fiber bundle to the inside of the press-wrapping tape (see paragraph [0034] of Patent Literature 1). However, if the press-wrapping tape that has been curled into a helical shape is opened, then the formed diameter of the press-wrapping tape widens. This results in it being difficult to decrease the diameter of optical cable cores and optical cables, and might give rise to gaps developing between the press-wrapping tape and the optical fiber bundle, and creases (wrinkles) being formed in the press-wrapping tape, impairing the transmission properties of the optical fibers.

[0008] Moreover, in Patent Literature 2, in a state in which optical fiber tape core strands are resting on a strip shaped press-wrapping, the press-wrapping is gradually shrunk in diameter using a tape former, and the optical fiber tape core strands are enveloped in the press-wrapping. However, in such a method, due to the optical fiber bundle not being guided, there is the possibility that, when the press-wrapping tape is being formed into a helical shape and the optical fiber bundle is being wrapped, any optical fibers protruding outside the press-wrapping tape might become pinched and severed in an overlap section of the press-wrapping tape, or that optical fibers might stray outside the press-wrapping tape. This results in the possibility that the transmission properties of the optical fibers might be impaired.

[0009] An objective of the present invention is to wrap an optical fiber bundle in a press-wrapping tape while guiding the optical fiber bundle.

Solution to Problem

[0010] A primary aspect of the invention for achieving the aforementioned objective is a former including: (A) a guide pipe that guides an optical fiber bundle configured from a plurality of optical fibers; (B) a tape forming section that forms a press-wrapping tape from a strip shape into a helical shape, while guiding the press-wrapping tape along a feed direction, the tape forming section including a curved section that gradually curves the strip shaped press-wrapping tape while guiding the press-wrapping tape along the feed direction, and a helical section that is a helical tube shaped location further to a downstream side than a position where two edges of the curved section intersect with each other, the helical section causing two end portions of the press-wrapping tape that has been curved with the curved section to overlap and forming the press-wrapping tape into a helical shape, while guiding the press-wrapping tape along the feed direction, and gradually narrowing an external diameter of the helical shaped press-wrapping tape, wherein (C) an outlet of the guide pipe is disposed further to the downstream side than the position where the two edges of the curved section intersect with each other.

[0011] Other features of the present invention are made clear by the Description and Drawings below.

Advantageous Effects of Invention

[0012] The present invention enables an optical fiber bundle to be wrapped in a press-wrapping tape while guiding the optical fiber bundle.

BRIEF DESCRIPTION OF DRAWINGS

[0013] FIG. **1** is cross-section of an optical cable **1**.

[0014] FIG. **2** is an explanatory diagram of an intermittently-fixed optical fiber tape **2**A.

[0015] FIG. **3** is a process diagram of a manufacturing device **10** of the optical cable **1**.

[0016] FIG. **4**A is diagram illustrating a former **30** of a first embodiment, as viewed from above. FIG. **4**B is a side view of the former **30**.

[0017] FIG. **5**A is a perspective view of the former **30**. FIG. **5**B is an explanatory diagram of a manner in which an optical fiber bundle **2** and a press-wrapping tape **3** are fed into the former **30**.

[0018] FIG. **6**A is a diagram illustrating a helical section **55**, as viewed from above. FIG. **6**B is a diagram of the helical section **55**, as viewed from below.

[0019] FIG. **7**A and FIG. **7**B are cross-sections taken along line A-A of FIG. **6**A. FIG. **7**A is a cross-section illustrating a state in which the optical fiber bundle **2** and the press-wrapping are not present, and FIG. **7**B is a cross-section illustrating a state in which the optical fiber bundle **2** and the press-wrapping are present (during manufacture of the optical cable **1**).

[0020] FIG. **8**A is an explanatory diagram of placement of an outlet **43** of a guide pipe **40** of the first exemplary embodiment. FIG. **8**B is an explanatory diagram of a first modified example of placement of the outlet **43** of the guide pipe **40**. FIG. **8**C is an explanatory diagram of a second modified example of placement of the outlet **43** of the guide pipe **40**.

[0021] FIG. **9**A is an explanatory diagram of cases in which a gap between the press-wrapping tape **3** and the

optical fiber bundle **2** is large. FIG. **9**B is an explanatory diagram of cases in which creases **3**B have developed in the press-wrapping tape **3**.

[0022] FIG. **10**A is an explanatory diagram of an outlet **43** of a guide pipe **40** of a second embodiment. FIG. **10**B is an explanatory diagram of placement of the outlet **43** of the guide pipe **40** of the second embodiment. FIG. **10**C is a cross-section taken along B-B of FIG. **10**B.

[0023] FIG. **11**A is an explanatory diagram of a first modified example of the second embodiment. FIG. **11**B is an explanatory diagram of a second modified example of the second embodiment.

DESCRIPTION OF EMBODIMENTS

[0024] At least the following matters are made clear from the Description and Drawings described below.

[0025] Clear disclosure is given of a former including: (A) a guide pipe that guides an optical fiber bundle configured from a plurality of optical fibers; (B) a tape forming section that forms a press-wrapping tape from a strip shape into a helical shape, while guiding the press-wrapping tape along a feed direction, the tape forming section including a curved section that gradually curves the strip shaped press-wrapping tape while guiding the press-wrapping tape along the feed direction, and a helical section that is a helical tube shaped location further to a downstream side than a position where two edges of the curved section intersect with each other, the helical section causing two end portions of the press-wrapping tape that has been curved with the curved section to overlap and forming the press-wrapping tape into a helical shape, while guiding the press-wrapping tape along the feed direction, and gradually narrowing an external diameter of the helical shaped press-wrapping tape, wherein (C) an outlet of the guide pipe is disposed further to the downstream side than the position where the two edges of the curved section intersect with each other.

[0026] Such a former is able to wrap an optical fiber bundle in a press-wrapping tape while guiding the optical fiber bundle.

[0027] The outlet of the guide pipe is preferably disposed further to an upstream side than an end portion of the helical section to a downstream side. Moreover, an internal diameter of the end portion of the helical section to the downstream side is preferably smaller than an external diameter of the guide pipe. This thereby enables a gap between the press-wrapping tape and the optical fiber bundle to be narrowed.

[0028] Preferably a leading end of the guide pipe to a downstream side is obliquely cut to form an elliptical shaped opening, and a leading end portion is formed to a downstream side of an outlet positioned to an upstream end of the opening. This thereby enables a gap between the press-wrapping tape and the optical fiber bundle to be narrowed.

[0029] Preferably an outer face of the leading end portion is disposed facing an edge to an inside of the helical section. This thereby enables the optical fiber to be suppressed from intruding into the overlap section.

[0030] Preferably the leading end portion is disposed to an inside of the helical section having an internal diameter smaller than an external diameter of the guide pipe. This thereby enables a gap between the press-wrapping tape and the optical fiber bundle to be narrowed.

[0031] Preferably a turn-back fold is formed to an edge of the curved section to restrain an end portion in a width direction of the press-wrapping tape, and the turn-back fold is not formed in the helical section. This thereby enables a gap between the press-wrapping tape and the overlap section to be narrowed.

[0032] Clear disclosure is given of a manufacturing method of an optical fiber unit in which an optical fiber bundle configured from a plurality of optical fibers is wrapped in a press-wrapping tape, the optical fiber unit manufacturing method including: preparing a former including a guide pipe that guides the optical fiber bundle, and a tape forming section that forms a press-wrapping tape from a strip shape into a helical shape while guiding the press-wrapping tape along a feed direction; feeding the optical fiber bundle while guiding the optical fiber bundle with the guide pipe; gradually causing the strip shaped press-wrapping tape to curve while guiding the press-wrapping tape with a curved section of the former; while guiding the press-wrapping tape using a helical section that is a helical tube shaped location further to a downstream side than a position where two edges of the curved section intersect with each other, causing two end portions of the press-wrapping tape that has been curved with the curved section to overlap and forming the press-wrapping tape into a helical shape, and gradually narrowing an external diameter of the helical shaped press-wrapping tape; and feeding the optical fiber bundle out from an outlet of the guide pipe, disposed further to the downstream side than the position where the two edges of the curved section intersect with each other, and into the helical shaped press-wrapping tape.

[0033] Such an optical fiber unit manufacturing method enables an optical fiber bundle to be wrapped in a press-wrapping tape while guiding the optical fiber bundle.

[0034] Preferably the press-wrapping tape is discharged from the helical section in a tension-applied state. A state in which the optical fiber bundle is wrapped in the press-wrapping tape is thereby maintained, even after being discharged from the helical section, and therefore the optical fiber bundle can be prevented from straying outside the press-wrapping tape.

[0035] Clear disclosure is given of a manufacturing method of an optical cable including an optical fiber bundle configured from a plurality of optical fibers and a press-wrapping tape wrapping the optical fiber bundle, the optical cable manufacturing method including: preparing a former including a guide pipe that guides the optical fiber bundle, and a tape forming section that forms a press-wrapping tape from a strip shape into a helical shape while guiding the press-wrapping tape along a feed direction; feeding the optical fiber bundle while guiding the optical fiber bundle with the guide pipe; gradually causing the strip shaped press-wrapping tape to curve while guiding the press-wrapping tape with a curved section of the former; while guiding the press-wrapping tape using a helical section that is a helical tube shaped location further to a downstream side than a position where two edges of the curved section intersect with each other, causing two end portions of the press-wrapping tape that has been curved with the curved section to overlap and forming the press-wrapping tape into a helical shape, and gradually narrowing an external diameter of the helical shaped press-wrapping tape; and feeding the optical fiber bundle out from an outlet of the guide pipe, disposed further to the downstream side than the position where the two edges of the curved section intersect with each other, and into the helical shaped press-wrapping tape.

[0036] Such an optical cable manufacturing method enables an optical fiber bundle to be wrapped in a press-wrapping tape while guiding the optical fiber bundle.

[0037] Preferably the press-wrapping tape is discharged from the helical section in a tension-applied state. A state in which the optical fiber bundle is wrapped in the press-wrapping tape is thereby maintained, even after being discharged from the helical section, and therefore the optical fiber bundle can be prevented from straying outside the press-wrapping tape.

===Reference Explanation: Optical Cable **1**===

[0038] FIG. **1** is a cross-section of the optical cable **1**. The optical cable **1** includes the optical fiber bundle **2**, the press-wrapping tape **3**, and an outer cover **5**.

[0039] The optical fiber bundle **2** is configured from a plurality of optical fibers **2**B. In this case, the optical fiber bundle is formed by line-concentrating four of the intermittently-fixed optical fiber tapes **2**A. Each of the intermittently-fixed optical fiber tapes **2**A is configured with four cores, and the optical fiber bundle **2** is configured from a total of 16 optical fibers **2**B.

[0040] FIG. **2** is an explanatory diagram of an intermittently-fixed optical fiber tape **2**A. The intermittently-fixed optical fiber tape **2**A is an optical fiber tape **2**A in which connection parts **2**C connecting between adjacent optical fibers **2**B are intermittently disposed in the length direction and the width direction of the optical fibers **2**B, respectively.

[0041] The intermittently-fixed optical fiber tape **2**A is configured from three or more cores of the optical fibers **2**B (optical fiber cores) that are arranged parallel to each other. The plurality of the connection parts **2**C connecting two adjacent cores of the optical fibers **2**B to each other are intermittently disposed in two dimensions: the length direction and the width direction. The connection parts **2**C are each a location where a connection is made between two adjacent cores of the optical fibers **2**B by, for example, an ultraviolet curing resin or a thermoplastic resin. The regions other than where the connection parts **2**C are present between two adjacent cores of the optical fibers **2**B are non-connecting parts. At the non-connecting parts, the two adjacent cores of the optical fibers **2**B are not bound by each other. This thereby enables the intermittently-fixed optical fiber tape **2**A to be rolled up into a cylinder shape (bundle shape) or stored folded onto itself, enabling a high density of the optical fibers **2**B to be packed in the optical cable **1**.

[0042] Note that the optical fiber bundle **2** is not limited to being configured from the intermittently-fixed optical fiber tapes **2**A. For example, instead of being configured from the intermittently-fixed optical fiber tapes **2**A, configuration may be made from a plurality of (for example, sixteen) single optical fibers **2**B. Moreover, there is also no limitation to sixteen as the number of the optical fibers **2**B configuring the optical fiber bundle **2**.

[0043] The press-wrapping tape **3** is a member for wrapping the optical fiber bundle **2**. Inside the optical cable **1**, the press-wrapping tape **3** has a helical shape, and includes an overlap section **3**A where two edge portions in the width direction of the press-wrapping tape **3** overlap with each other. A method for forming the press-wrapping tape **3** in such a manner is described later.

[0044] A polyimide tape, a polyester tape, a polypropylene tape, a polyethylene tape, or the like is employed for the press-wrapping tape **3**. Other than these, a non-woven fabric may also be utilized as the press-wrapping tape **3**. In such cases, the non-woven fabric employed is formed by making a polyimide, a polyester, a polypropylene, a polyethylene, or the like into a tube shape. Note that the non-woven fabric may be a non-woven fabric that has been adhered or coated with a water absorbent powder or the like, or a non-woven fabric that has been subjected to surface treatment for this purpose. The press-wrapping tape **3** may be a non-woven fabric with a film, such as a polyester film, stuck thereon.

[0045] The optical fiber bundle **2** wrapped in the press-wrapping tape **3** is sometimes referred to as an optical fiber unit **4**. The optical fiber unit **4** includes a plurality of the optical fiber bundles **2** and the press-wrapping tape **3**, with the press-wrapping tape **3** wrapping the plurality of optical fiber bundles **2**. Sometimes each of the optical fiber bundles **2** is bound by a bundling member (identification member).

[0046] The outer cover **5** is a member covering such that the optical fiber unit **4** (the optical fiber bundle **2** and the press-wrapping tape **3**) is contained within. Tensile strength bodies **6** and tear strings **7** are provided in the outer cover **5**. The tensile strength bodies **6** are members that resist shrinkage of the outer cover **5**, and suppress distortion and bending imparted to the optical cable **1** by shrinkage of the outer cover **5**. A pair of the tensile strength bodies **6** is provided within the outer cover **5** so as to be disposed sandwiching the press-wrapping tape **3**. The tear strings **7** are members employed when tearing the outer cover **5** of the optical cable **1** along its length direction during operations to branch the optical cable **1**. In this case, a pair of the tear strings **7** is provided within the outer cover **5** so as to be disposed sandwiching the press-wrapping tape **3**, on a line orthogonal to a line connecting between the pair of tensile strength bodies **6**.

[0047] Note that the outer cover **5** does not necessarily include the tensile strength bodies **6** and the tear strings **7**. Either, or both, of the tensile strength bodies **6** and the tear strings **7**, may be omitted from inside the outer cover **5**. Another member may also be disposed inside the outer cover **5**.

[0048] In this case, there is a single optical fiber unit **4** contained in the outer cover **5**; however, there may be a plurality of the optical fiber units **4** contained in the outer cover **5**.

[0049] FIG. **3** is a process diagram of a manufacturing device **10** of the optical cable **1**.

[0050] The four tapes of the intermittently-fixed optical fiber tape **2**A are fed into a collector unit **11**. The optical fiber bundles **2** that are line-concentrated in the collector unit **11** are fed into a guide pipe **40** (described later) of a former **30**. The press-wrapping tape **3** that has been wound in a planar coil is fed into a tape forming section **50** (described later) of the former **30**. As described later, in the former **30**, the optical fiber unit **4** (the optical fiber bundle **2** and the press-wrapping tape **3**) is formed by wrapping the optical fiber bundle **2** in the press-wrapping tape **3** while guiding the optical fiber bundle **2**, and the optical fiber unit **4** is fed into an extruder **12**.

[0051] The optical fiber unit **4**, the two tensile strength bodies **6**, and the two tear strings **7**, are fed into the extruder **12**. The extruder **12** causes the optical fiber unit **4** to run as the tensile strength bodies **6** and the tear strings **7** are being drawn out from their respective feed sources, and covers the periphery of the optical fiber unit **4** with the outer cover **5**. The sixteen core optical cable **1** illustrated in FIG. **1** is

manufactured in this manner. The manufactured optical cable **1** is wound onto a drum (not illustrated in the drawings).

Former **30** of First Embodiment

[0052] FIG. **4**A is a diagram of a former **30** of a first embodiment, as viewed from above. FIG. **4**B is a side view of the former **30**. FIG. **5**A is a perspective view of the former **30**. FIG. **5**B is an explanatory diagram of a manner in which the optical fiber bundle **2** and the press-wrapping tape **3** are fed into the former **30**. Speckled hatching has been applied to the press-wrapping tape **3** in FIG. **5**B.

[0053] In the following explanation each direction is defined, as illustrated in FIG. **4**A and FIG. **4**B. Namely, a direction parallel to the optical fiber bundle **2** as it is being fed into the former **30** is taken as the "front-rear direction", with the side of the feed sources of the optical fiber bundle **2** taken as the "rear", and the opposite side taken as the "front", as viewed from the former **30**. The feed source side according to the feed direction of the optical fiber bundle **2** (a direction from the rear toward the front: fiber feed direction) is referred to as "upstream", and the feed destination side is referred to as "downstream". The width direction of the strip shaped press-wrapping tape **3** of the former **30** is taken as the "left-right direction", with the right side taken as the "right" and the opposite side taken as the "left", as viewed from the front side. A direction orthogonal to the front-rear direction and to the left-right direction is taken as the "up-down direction", with the side of the guide pipe **40** at the rear side of the former **30** taken as "up" and the side of the tape forming section **50** taken as "down". Note that according to a feed direction of the press-wrapping tape **3** (a tape feed direction), the side of the feed source of the press-wrapping tape **3** is referred to as the "upstream", and the feed destination side is referred to as the "downstream".

[0054] The former **30** is a tool for wrapping the optical fiber bundle **2** in the press-wrapping tape **3** while guiding the optical fiber bundle **2**. The former **30** includes the guide pipe **40** and the tape forming section **50**.

[0055] The guide pipe **40** is a tube shaped member that guides the optical fiber bundle **2** along the fiber feed direction. In this case, the guide pipe **40** is configured from a metal pipe; however, it may be configured from another substance. An inlet **42** (feed port) for the optical fiber bundle **2** is present at the rear side of the guide pipe **40**, and an outlet **43** (see FIG. **8**A) that acts as the discharge port for the optical fiber bundle **2** is present at the front side of the guide pipe **40**.

[0056] Inside the guide pipe **40**, the diameter of the optical fiber bundle **2** does not widen, due to the optical fiber bundle **2** being constrained by the inner wall of the guide pipe **40**. The diameter of the optical fiber bundle **2** immediately after exiting from the outlet **43** of the guide pipe **40** is also substantially the same as the internal diameter of the guide pipe **40**. The guide pipe **40** accordingly functions in this manner to suppress the diameter of the optical fiber bundle **2** from widening.

[0057] Suppose that an attempt were made to wrap the optical fiber bundle **2** in the press-wrapping tape **3** in a state in which the guide pipe **40** is omitted, then there would be a possibility that the optical fibers **2**B might become pinched in the overlap section **3**A of the helical shaped press-wrapping tape **3**, or stray outside the press-wrapping tape **3**. This might, as a result, lead to impairment of the transmission properties of the optical fibers **2**B, or, in the worst case, to the optical fibers **2**B being severed. Thus the guide pipe **40** functions in this manner to suppress the optical fibers **2**B from intruding into the overlap section **3**A of the helical shaped press-wrapping tape **3**.

[0058] The tape forming section **50** is a member that forms the press-wrapping tape **3** from a strip shape into a helical shape while guiding the press-wrapping tape **3** along the tape feed direction. The guide section **51**, a curved section **53**, and a helical section **55** are provided to the tape forming section **50**, in sequence from the upstream side in the tape feed direction. Note that, as viewed from above the tape forming section **50**, the curved section **53** refers to a location further to the upstream side than a position X where the left and right edges of the tape forming section **50** intersect with each other (see FIG. **4**A), and the helical section **55** refers to a location further to the downstream side than the position X.

[0059] The guide section **51** is a location that guides the strip shaped press-wrapping tape **3** as far as the curved section **53**, and includes a guide face **51**A having a width substantially the same as the press-wrapping tape **3**.

[0060] The guide section **51** is formed in a curve such that the nearer to the rear side, the further away the press-wrapping tape **3** is from the optical fiber bundle **2**. This thereby enables the feed source of the optical fiber bundle **2** to be disposed separated from the feed source of the press-wrapping tape **3**. The reason the feed path of the optical fibers **2**B is set in a straight line is in order to suppress impairment of the transmission properties of the optical fibers **2**B.

[0061] A turn-back fold **51**B is formed at each of the left and right edges of the guide section **51**. The edges in the left-right direction of the press-wrapping tape **3** (the left-right direction) are restrained on the guide section **51** by the turn-back folds **51**B. A hold-down section **51**C is formed at the upstream side and at the downstream side of the guide section **51**. The hold-down section **51**C prevents the press-wrapping tape **3** from lifting up away from the guide face **51**A by pinching the press-wrapping tape **3** against the guide face **51**A of the guide section **51**. Note that a back tension is applied to the press-wrapping tape **3** as it is being fed into the tape forming section **50**, and lifting up of the press-wrapping tape **3** is prevented by the back tension.

[0062] In this case, the guide section **51** is provided at the upstream side of the tape forming section **50**; however, it is possible to configure the tape forming section **50** from the curved section **53** and the helical section **55**, without providing the guide section **51**. However, feeding of the press-wrapping tape **3** into the curved section **53** is smoother when the guide section **51** is provided.

[0063] The curved section **53** is a location that gradually curves the strip shaped press-wrapping tape **3**, while guiding the press-wrapping tape **3** along the tape feed direction. An inner face **53**A of the curved section **53** is an extension face of the guide face **51**A of the guide section **51**. A cross-section of the curved section **53** in a plane orthogonal to the front-rear direction is C-shaped, and the strip shaped press-wrapping tape **3** runs along the inner face **53**A of the curved section **53** and gradually curves into a C-shape. When viewed from above the curved section **53**, as illustrated in FIG. **4**A, the left and right edges approach each other on progression toward the front side.

[0064] Since the curved section **53** is a location further to the upstream side than the position X where the left and right edges intersect (see FIG. **4**A), the upper side of the curved section **53** is open. The guide pipe **40** is disposed in this open region. The guide pipe **40** is fixed to the tape forming section **50** at two sites further to the upstream side than the position X (see FIG. **4**A). A fixing part **41** at the upstream side of the guide pipe **40** is positioned on the upper faces of the turn-back folds **51**B of the guide section **51**. This thereby enables the guide pipe **40** to be fixed to the guide section **51**, without contacting the guide face **51**A of the guide section **51**. Moreover, the fixing part **41** at the downstream side of the guide pipe **40** is a location where the left and right edges of the curved section **53** approach each other at the upper side. This thereby enables the guide pipe **40** to be fixed without contacting the inner face **53**A of the curved section **53**. Note that an end portion at the outlet **43** side of the guide pipe **40** projects out further to the downstream side than the fixing part **41**, and is inserted into the helical section **55**. This thereby enables the outlet **43** of the guide pipe **40** to be disposed further to the downstream side than the position X (see FIG. **4**A).

[0065] Turn-back folds **53**B are also formed at the left and right edges of the curved section **53**. The press-wrapping tape **3** inside the curved section **53** is restricted from moving in directions other than the feed direction by the curved section **53**. The turn-back folds **53**B of the curved section **53** are extensions of the turn-back folds **51**B of the guide section **51**.

[0066] The turn-back folds **53**B of the curved section **53** are not formed further to the downstream side than the fixing part **41** at the downstream side of the guide pipe **40**. However, due to the two edges of the press-wrapping tape **3** being continuously restrained further to the upstream side thereof, misalignment of the press-wrapping tape **3** in the curved section **53** and the helical section **55** is prevented even though the turn-back folds **53**B are not present.

[0067] FIG. **6**A is a diagram of the helical section **55**, as viewed from above. FIG. **6**B is a diagram of the helical section **55**, as viewed from below. FIG. **7**A and FIG. **7**B are cross-sections taken along line A-A of FIG. **6**A. FIG. **7**A is a cross-section illustrating a state in which the optical fiber bundle **2** and the press-wrapping are not present. FIG. **7**B is a cross-section illustrating a state in which the optical fiber bundle **2** and the press-wrapping are present (during manufacture of the optical cable **1**).

[0068] The helical section **55** is a helical tube-shape location further to the downstream side than the position where the two edges of the curved section **53** intersect (position X in FIG. **4**A). The inner face of the helical section **55** is an extension face of the inner face of the curved section **53**, and guides the press-wrapping tape **3** along the tape feed direction. In this case, the helical section **55** (and the curved section **53**) is configured by machining the front side of a metal sheet configuring the guide section **51** into a helical tube-shape. The helical section **55** further to the downstream side than the position X where the left and right edges intersect (see FIG. **4**A) is formed such that the edge on the right side is on the inside, and the edge on the left side is on the outside.

[0069] As illustrated in FIG. **7**A, the helical section **55** is formed with an overlap section **55**A where the two edge portions of the helical section **55** overlap with each other. In the overlap section **55**A, a gap is formed such that the outside face of the end portion on the inside does not contact the inner face of the end portion on the outside. Part of the press-wrapping tape **3** (the overlap section **3**A of the press-wrapping tape **3**) passes through this gap, as illustrated in FIG. **7**B. Due to the press-wrapping tape **3** passing through the helical section **55** provided with such an overlap section **55**A, the press-wrapping tape **3** is formed running along the helical shaped inner face of the overlap section **55**A, the two end portions of the press-wrapping tape **3** are formed into an overlap, and the press-wrapping tape **3** is formed into a helical shape having the overlap section **3**A.

[0070] The helical section **55** is a tapered helical pipe, with the external diameter gradually narrowing toward the front side. Thus when the press-wrapping tape **3** is being fed toward the downstream side, the helical shaped press-wrapping tape **3** is formed with a gradually narrowing external diameter. The press-wrapping tape **3** that has been formed into a helical shape is then discharged from the front end of the helical section **55**, and fed into the extruder **12**.

[0071] Due to the press-wrapping tape **3** being discharged from the tapered helical section **55**, the overlap ratio (the proportion occupied by the press-wrapping tape with respect to the circumference: for example, 100% if there is one turn, 200% if there are two turns (a double layer), of the press-wrapping tape) increases towards the leading end. Immediately after the press-wrapping tape **3** is discharged from the helical section **55**, the press-wrapping tape **3** is even slightly narrower (the press-wrapping tape **3** is squeezed) in external profile than the inner face of the helical section **55**. A gap between the press-wrapping tape **3** and the optical fiber bundle **2** is thereby narrowed, enabling a narrower diameter to be achieved for the optical fiber unit **4** (the optical fiber bundle **2** and the press-wrapping tape **3**), and enabling a narrower diameter to be achieved for the optical cable **1**.

[0072] Moreover, tension is applied to the press-wrapping tape **3** being discharged from the helical section **55**. Due to the tapered press-wrapping tape **3** being discharged from the tapered helical section **55** in a tension-applied state, the state in which the optical fiber bundle is wrapped in the press-wrapping tape is maintained even after being discharged from the helical section. This thereby enables the optical fiber bundle to be prevented from straying outside the press-wrapping tape.

[0073] The helical section **55** is not provided with the turn-back folds that are provided at the left and right edges of the guide section **51** and the curved section **53**. This thereby enables a gap between the edge on the outside and the edge on the inside of the helical section **55** (see FIG. **7**A and FIG. **7**B: the gap of the overlap section **55**A) to become narrow, and enables a gap between the overlap sections **3**A of the press-wrapping tape **3** that has been formed into a helical shape to become narrow. Due to narrowing of the gap between the edge on the outside of the helical shaped press-wrapping tape **3** and the outer peripheral face of the press-wrapping tape **3** at the inside thereof, the helical shaped press-wrapping tape **3** is less liable to open out. Due to narrowing of the gap between the edge on the inside of the helical shaped press-wrapping tape **3** and the inner peripheral face of the press-wrapping tape **3** at the outside thereof, the optical fibers **2**B configuring the optical fiber bundle **2** are less liable to intrude into the overlap section **3**A of the press-wrapping tape **3**, and, as a result, transmission properties of the optical fibers **2**B can be suppressed from being impaired.

[0074] FIG. **8**A is an explanatory diagram of placement of the outlet **43** of the guide pipe **40** in the first embodiment. In the drawings, the external profile of the helical section **55** is indicated by thin lines, the helical section **55** is made transparent, and the external profile of the guide pipe **40** is indicated by bold lines.

[0075] As illustrated in the diagrams, the outlet **43** of the guide pipe **40** is disposed further toward the downstream side than the position X where the two edges of the curved section **53** intersect, and disposed further toward the downstream side than the position in the helical section **55** where the two width direction edges of the press-wrapping tape **3** intersect. Namely, the guide pipe **40** is inserted into the helical section **55**, and is inserted into the helical shaped press-wrapping tape **3** formed with the overlap section **3**A. Hence, when the optical fiber bundle **2** is discharged from the outlet **43** of the guide pipe **40**, the optical fiber bundle **2** is in a state wrapped in the press-wrapping tape **3**. In other words, the optical fiber bundle **2** is fed into the center of the press-wrapping tape **3** that has been formed into the helical shape. As a result, the optical fibers **2**B are less liable to intrude into the overlap section **3**A of the press-wrapping tape **3**. Note that due to the present embodiment not requiring a heating means (for example, a heater) to curl the press-wrapping tape **3** formed into the helical shape, the configuration of the manufacturing device can be made smaller, enabling a lower cost and a saving in space to be achieved.

[0076] Moreover, in the first embodiment, the outlet **43** of the guide pipe **40** is disposed further to the upstream side than the front end (the end portion at the downstream side) of the helical section **55**. It is accordingly possible to make the internal diameter of the front end of the helical section **55** (the maximum diameter of an inscribed circle to the inner face of the helical section **55**) narrower. In particular, in the first embodiment, due to disposing the outlet **43** of the guide pipe **40** further to the upstream side than the front end of the helical section **55**, the internal diameter of the front end of the helical section **55** is narrower than the external diameter of the guide pipe **40**. This thereby enables the gap between the press-wrapping tape **3** and the optical fiber bundle **2** to be narrowed.

[0077] FIG. **8**B is an explanatory diagram of a first modified example of placement of the outlet **43** of the guide pipe **40**. In the first modified example, the outlet **43** of the guide pipe **40** is disposed at the same position as the front end of the helical section **55**. Thus also in the first modified example, the outlet **43** of the guide pipe **40** is disposed further toward the downstream side than the position X where the two edges of the curved section **53** intersect, and disposed further toward the downstream side than the position in the helical section **55** where the two width direction edges of the press-wrapping tape **3** intersect. The optical fibers **2**B are accordingly less liable to intrude into the overlap section **3**A of the press-wrapping tape **3**.

[0078] However, in the first modified example, the internal diameter of the front end of the helical section **55** must be made larger than the external diameter of the outlet **43** of the guide pipe **40**. It is accordingly difficult to narrow the gap between the press-wrapping tape **3** and the optical fiber bundle **2**. However, due to the helical section **55** being a tapered helical pipe, the press-wrapping tape **3** is slightly squeezed immediately after being discharged from the helical section **55**, thereby enabling the gap between the press-wrapping tape **3** and the optical fiber bundle **2** to be narrowed.

[0079] FIG. **8**C is an explanatory diagram of a second modified example of placement of the outlet **43** of the guide pipe **40**. In the second modified example, the outlet **43** of the guide pipe **40** is disposed further toward the downstream side than the front end of the helical section **55**. The second modified example also enables the advantageous effect of the optical fibers **2**B not being liable to intrude into the overlap section **3**A of the press-wrapping tape **3** to be exhibited. In the second modified example, however, due to the guide pipe **40** projecting out from the front end of the helical section **55** to the downstream side, the press-wrapping tape **3** is not squeezed immediately after being discharged from the helical section **55** even though the helical section **55** is a tapered helical tube shape, and this therefore makes it difficult to obtain an advantageous effect in which the gap between the press-wrapping tape **3** and the optical fiber bundle **2** is narrowed.

Second Embodiment

[0080] In the first embodiment, at the position of the outlet **43** of the guide pipe **40**, it is necessary to make the internal diameter of the helical section **55** larger than the external diameter of the outlet **43** of the guide pipe **40**. Namely, in the first embodiment, the internal diameter of the helical section **55** is limited by the external diameter of the guide pipe **40**, making it difficult to achieve a narrower diameter. As a result, the gap between the press-wrapping tape **3** and the optical fiber bundle **2** becomes larger, with the optical fiber unit **4** (the optical fiber bundle **2** and the press-wrapping tape **3**) becoming fatter (see FIG. **9**A). If the optical fiber unit **4** is tightened from the outside when covering with the outer cover **5** in a state in which there is a wide gap between the press-wrapping tape **3** and the optical fiber bundle **2**, then creases **3**B develop in the press-wrapping tape **3** (see FIG. **9**B), and pressure from the creases **3**B acts on the optical fibers **2**B, giving rise to a possibility that the transmission properties of the optical fibers **2**B might be adversely affected.

[0081] In contrast thereto, in the second embodiment, the leading end of the guide pipe **40** is configured with an oblique cut, achieving a helical section **55** with a narrower diameter.

[0082] FIG. **10**A is an explanatory diagram of the outlet **43** of the guide pipe **40** of the second embodiment. FIG. **10**B is an explanatory diagram of placement of the outlet **43** of the guide pipe **40** in the second embodiment. In FIG. **10**B, the external profile of the helical section **55** is indicated by thin lines, the helical section **55** is made transparent, and the external profile of the guide pipe **40** is indicated by bold lines. FIG. **10**C is a cross-section taken along line B-B of FIG. **10**B (a cross-section further toward the downstream side than a central position of an opening **44**). The circle indicated by the dashed line in FIG. **10**C shows the external profile of the guide pipe **40**.

[0083] As illustrated in FIG. **10**A, the leading end of the guide pipe **40** in the second embodiment is cut obliquely. In the following explanation, this elliptical shaped opening is referred to as "opening **44**". The optical fiber bundle **2** that has passed through the guide pipe **40** is exposed from the upstream end of the opening **44**, and the position at the upstream end of the opening **44** is referred to as "outlet **43**"

of the guide pipe **40**. The location (pointed location) of the guide pipe **40** further to the downstream side than the outlet **43** is referred to as "leading end portion **45**".

[0084] As illustrated in FIG. **10**B, in the second embodiment too, the outlet **43** of the guide pipe **40** is disposed further toward the downstream side than the position X where the two edges of the curved section **53** intersect, and disposed further toward the downstream side than the position in the helical section **55** where the two width direction edges of the press-wrapping tape **3** intersect. Thus also in the second embodiment, the optical fibers **2**B are less liable to intrude into the overlap section **3**A of the press-wrapping tape **3**.

[0085] Also in the second embodiment, at the position of the outlet **43** of the guide pipe **40**, it is necessary to make the internal diameter of the helical section **55** (the maximum diameter of an inscribed circle to the inner face of the helical section **55**) larger than the external diameter of the guide pipe **40**. However, in the second embodiment, the width of the leading end portion **45** is smaller than the external diameter of the outlet **43** of the guide pipe **40** further to the downstream side than the central position of the opening **44** (for example, a position on line B-B of FIG. **10**B), and so, at this position (at the leading end portion **45** further to the downstream side than the central position of the opening **44**), it is possible for the internal diameter of the helical section **55** to be made smaller than the external diameter of the guide pipe **40**.

[0086] As illustrated in FIG. **10**C, in the second embodiment, the leading end portion **45** of the guide pipe **40** is disposed at the inside of the helical section **55** having an internal diameter smaller than the external diameter (dashed line in the drawing) of the guide pipe **40**. This thereby enables the helical section **55** to be made narrower in diameter while guiding the optical fiber bundle **2** using the leading end portion **45** of the guide pipe **40**. As a result, the gap can be narrowed between the press-wrapping tape **3** and the optical fiber bundle **2**.

[0087] Moreover, as illustrated in FIG. **10**C, the leading end portion **45** of the guide pipe **40** is disposed between the edge at the inside of the helical section **55** (or at the edge at the inside of the helical shaped press-wrapping tape **3**), and the optical fiber bundle **2**. In other words, the outer face of the leading end portion **45** of the guide pipe **40** is disposed facing the edge at the inside of the helical section **55**, so as to block intrusion of the optical fibers **2**B into the overlap section **55**A of the helical section **55** (or the overlap section **3**A of the press-wrapping tape **3**). Thus, even after the optical fiber bundle **2** is exposed from the outlet **43** of the guide pipe **40**, the optical fibers **2**B are suppressed from intruding into the overlap section **3**A of the press-wrapping tape **3**. Moreover, although there is a possibility that the optical fibers **2**B may be damaged, or in the worst case that the optical fibers **2**B may be severed, by the helical section **55** in the case where the optical fibers **2**B were to intrude into the overlap section **55**A of the helical section **55**, in the second embodiment, such damage to the optical fibers **2**B is also suppressed.

[0088] FIG. **11**A is an explanatory diagram illustrating a first modified example of the second embodiment. In the first modified example, the furthest downstream end of the leading end portion **45** of the guide pipe **40** is disposed at the same position as the front end of the helical section **55**. However, in the first modified example of the second embodiment, in contrast to the first modified example of the first embodiment described above (see FIG. **8**B), even though the furthest downstream end of the guide pipe **40** is disposed at the same position as the front end of the helical section **55**, the internal diameter of the front end of the helical section **55** can still be made narrower, enabling the helical section **55** to be made with a narrower diameter.

[0089] FIG. **11**B is an explanatory diagram of a second modified example of the second embodiment. In the second modified example, the furthest downstream end of the leading end portion **45** of the guide pipe **40** is disposed further to the downstream side than the front end of the helical section **55**. However, in the second modified example of the second embodiment, in contrast to the second modified example of the first embodiment described above (see FIG. **8**C), it is possible to make the internal diameter at the front end of the helical section **55** narrower than the external diameter of the guide pipe **40** by the central position of the opening **44** being further to the upstream side than the front end of the helical section **55**.

[0090] The helical shaped press-wrapping tape **3** preferably has 1.5 turns or more (an overlap ratio of 150% or greater). This is because the press-wrapping tape **3** shrinks with heating during extrusion molding of resin for the outer cover **5** in the extruder **12** (see FIG. **3**), and a possibility accordingly arising of the optical fibers **2**B straying outside the shrunk press-wrapping tape **3** when the outer cover **5** is removed during mid-span accessing in the case where the overlap ratio of the press-wrapping tape **3** is less than 150%. Regarding this point, when implementing the second modified example of the second embodiment, due to an overlap ratio of 150% or greater being achievable (due to being able to form the helical shaped press-wrapping tape **3** with 1.5 turns or greater), the optical fiber bundle **2**B can, to a large extent, be suppressed from straying outside the press-wrapping tape **3** after mid-span accessing.

[0091] Moreover, in the second modified example of the second embodiment, the leading end portion **45** has a tapered shape projecting out from the front end of the helical section **55** toward the downstream side. Thus in the second modified example of the second embodiment, in contrast to the second modified example of the first embodiment described above, the press-wrapping tape **3** is squeezed immediately after being discharged from the helical section **55**, and it is accordingly possible to obtain an effect in which a gap between the press-wrapping tape **3** and the optical fiber bundle **2** is narrowed.

[0092] Note that also in the second modified example of the second embodiment, the state in which the optical fiber bundle is wrapped in the press-wrapping tape is maintained by applying tension to the press-wrapping tape **3**, even after being discharged from the helical section. This thereby enables the optical fiber bundle to be prevented from straying outside the press-wrapping tape.

===Others===

[0093] The foregoing embodiments are for facilitating the understanding of the present invention, and are not to be construed as to limit the present invention. Needless to say, the present invention may be modified and/or improved without departing from the gist thereof, and the present invention encompasses equivalents thereof.

REFERENCE SIGNS LIST

[0094] **1**: optical cable; **2**: optical fiber bundle;
[0095] **2**A: intermittently-fixed optical fiber tape;
[0096] **2**B: optical fibers; **2**C: connection parts;
[0097] **3**: press-wrapping tape;
[0098] **3**A: overlap section (press-wrapping tape); **3**B: creases;
[0099] **4**: optical fiber unit; **5**: outer cover;
[0100] **6**: tensile strength body; **7**: tear string;
[0101] **10**: manufacturing device; **11**: collector unit; **12**: extruder;
[0102] **30**: former; **40**: guide pipe;
[0103] **41**: fixing part; **42**: inlet; **43**: outlet;
[0104] **44**: opening; **45**: leading end portion;
[0105] **50**: tape forming section; **51**: guide section;
[0106] **51**A: guide face; **51**B: turn-back fold; **51**C: hold-down section;
[0107] **53**: curved section; **53**A: inner face; **53**B: turn-back fold;
[0108] **55**: helical section; **55**A: overlap section (helical section).

1. A former comprising:
a guide pipe that guides an optical fiber bundle configured from a plurality of optical fibers;
a tape forming section that forms a press-wrapping tape from a strip shape into a helical shape, while guiding the press-wrapping tape along a feed direction, the tape forming section including
a curved section that gradually curves the strip shaped press-wrapping tape while guiding the press-wrapping tape along the feed direction, and
a helical section that is a helical tube shaped location further to a downstream side than a position where two edges of the curved section intersect with each other, the helical section causing two end portions of the press-wrapping tape that has been curved with the curved section to overlap and forming the press-wrapping tape into a helical shape, while guiding the press-wrapping tape along the feed direction, and gradually narrowing an external diameter of the helical shaped press-wrapping tape, wherein
an outlet of the guide pipe is disposed further to the downstream side than the position where the two edges of the curved section intersect with each other.

2. The former according to claim **1**, wherein
the outlet of the guide pipe is disposed further to an upstream side than an end portion of the helical section to a downstream side.

3. The former according to claim **2**, wherein
an internal diameter of the end portion of the helical section to the downstream side is smaller than an external diameter of the guide pipe.

4. The former according to claim **1**, wherein:
a leading end of the guide pipe to a downstream side is obliquely cut to form an elliptical shaped opening; and
a leading end portion is formed to a downstream side of an outlet positioned to an upstream end of the opening.

5. The former according to claim **4**, wherein
an outer face of the leading end portion is disposed facing an edge to an inside of the helical section.

6. The former according to claim **4**, wherein
the leading end portion is disposed to an inside of the helical section having an internal diameter smaller than an external diameter of the guide pipe.

7. The former according to claim **1**, wherein:
a turn-back fold is formed to an edge of the curved section to restrain an end portion in a width direction of the press-wrapping tape; and
the turn-back fold is not formed in the helical section.

8. A manufacturing method of an optical fiber unit in which an optical fiber bundle configured from a plurality of optical fibers is wrapped in a press-wrapping tape, the optical fiber unit manufacturing method comprising:
preparing a former including a guide pipe that guides the optical fiber bundle, and a tape forming section that forms a press-wrapping tape from a strip shape into a helical shape while guiding the press-wrapping tape along a feed direction;
feeding the optical fiber bundle while guiding the optical fiber bundle with the guide pipe;
gradually causing the strip shaped press-wrapping tape to curve while guiding the press-wrapping tape with a curved section of the former;
while guiding the press-wrapping tape using a helical section that is a helical tube shaped location further to a downstream side than a position where two edges of the curved section intersect with each other, causing two end portions of the press-wrapping tape that has been curved with the curved section to overlap and forming the press-wrapping tape into a helical shape, and gradually narrowing an external diameter of the helical shaped press-wrapping tape; and
feeding the optical fiber bundle out from an outlet of the guide pipe, disposed further to the downstream side than the position where the two edges of the curved section intersect with each other, and into the helical shaped press-wrapping tape.

9. The optical fiber unit manufacturing method according to claim **8**, wherein
the press-wrapping tape is discharged from the helical section in a tension-applied state.

10. A manufacturing method of an optical cable including an optical fiber bundle configured from a plurality of optical fibers and a press-wrapping tape wrapping the optical fiber bundle, the optical cable manufacturing method comprising:
preparing a former including a guide pipe that guides the optical fiber bundle, and a tape forming section that forms a press-wrapping tape from a strip shape into a helical shape while guiding the press-wrapping tape along a feed direction;
feeding the optical fiber bundle while guiding the optical fiber bundle with the guide pipe;
gradually causing the strip shaped press-wrapping tape to curve while guiding the press-wrapping tape with a curved section of the former;
while guiding the press-wrapping tape using a helical section that is a helical tube shaped location further to a downstream side than a position where two edges of the curved section intersect with each other, causing two end portions of the press-wrapping tape that has been curved with the curved section to overlap and forming the press-wrapping tape into a helical shape, and gradually narrowing an external diameter of the helical shaped press-wrapping tape; and
feeding the optical fiber bundle out from an outlet of the guide pipe, disposed further to the downstream side than the position where the two edges of the curved

section intersect with each other, and into the helical shaped press-wrapping tape.

11. The optical cable manufacturing method according to claim **10**, wherein the press-wrapping tape is discharged from the helical section in a tension-applied state.

* * * * *