US 20080165081A1

(19) United States

(12) Patent Application Publication

Lawther et al.

(10) Pub. No.: US 2008/0165081 A1

(43) Pub. Date: Jul. 10, 2008

(54) **MULTI-FRAME DISPLAY SYSTEM WITH PERSPECTIVE BASED IMAGE ARRANGEMENT**

(76) Inventors: **Joel S. Lawther**, East Rochester, NY (US); **Dale F. McIntyre**, Honeoye Falls, NY (US); **Joseph A. Manico**, Rochester, NY (US); **Michael J. Telek**, Pittsford, NY (US); **John R. Fredlund**, Rochester, NY (US)

Correspondence Address:
David A. Novais
Patent Legal Staff
Eastman Kodak Company, 343 State Street
Rochester, NY 14650-2201

(21) Appl. No.: **11/649,972**

(22) Filed: **Jan. 5, 2007**

Publication Classification

(51) **Int. Cl.**
G09G 5/14 (2006.01)

(52) **U.S. Cl.** **345/1.2**

(57) **ABSTRACT**

Systems and methods are provided for presenting digital images using a plurality of digital media frames separated spatially along at least two axes. In one aspect the method comprises the steps of obtaining the digital images to be presented determining the multi-dimensional relationship between the digital media frames analyzing the digital images and any associated metadata to assign an image perspective determination to each of the digital images and determining an arrangement of the digital images for presentation on the plurality of the digital media frames according to the multi-dimensional relationship between the digital media frames and according to the determined image perspectives.

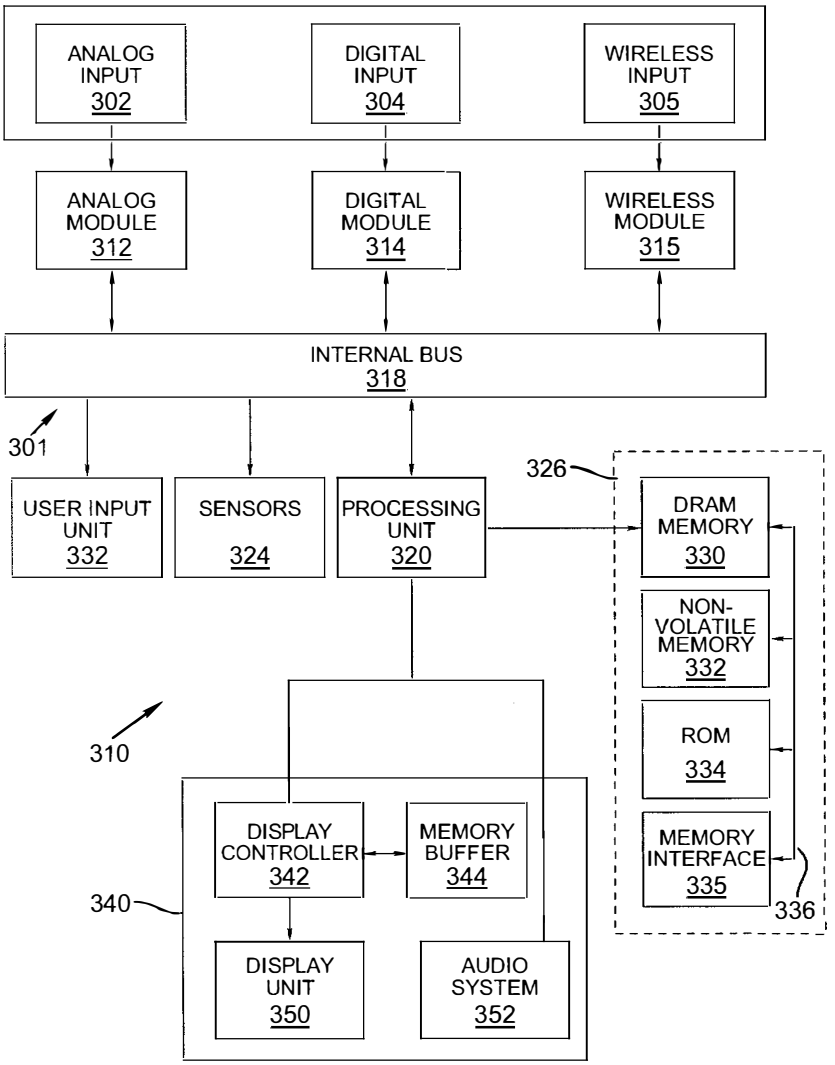

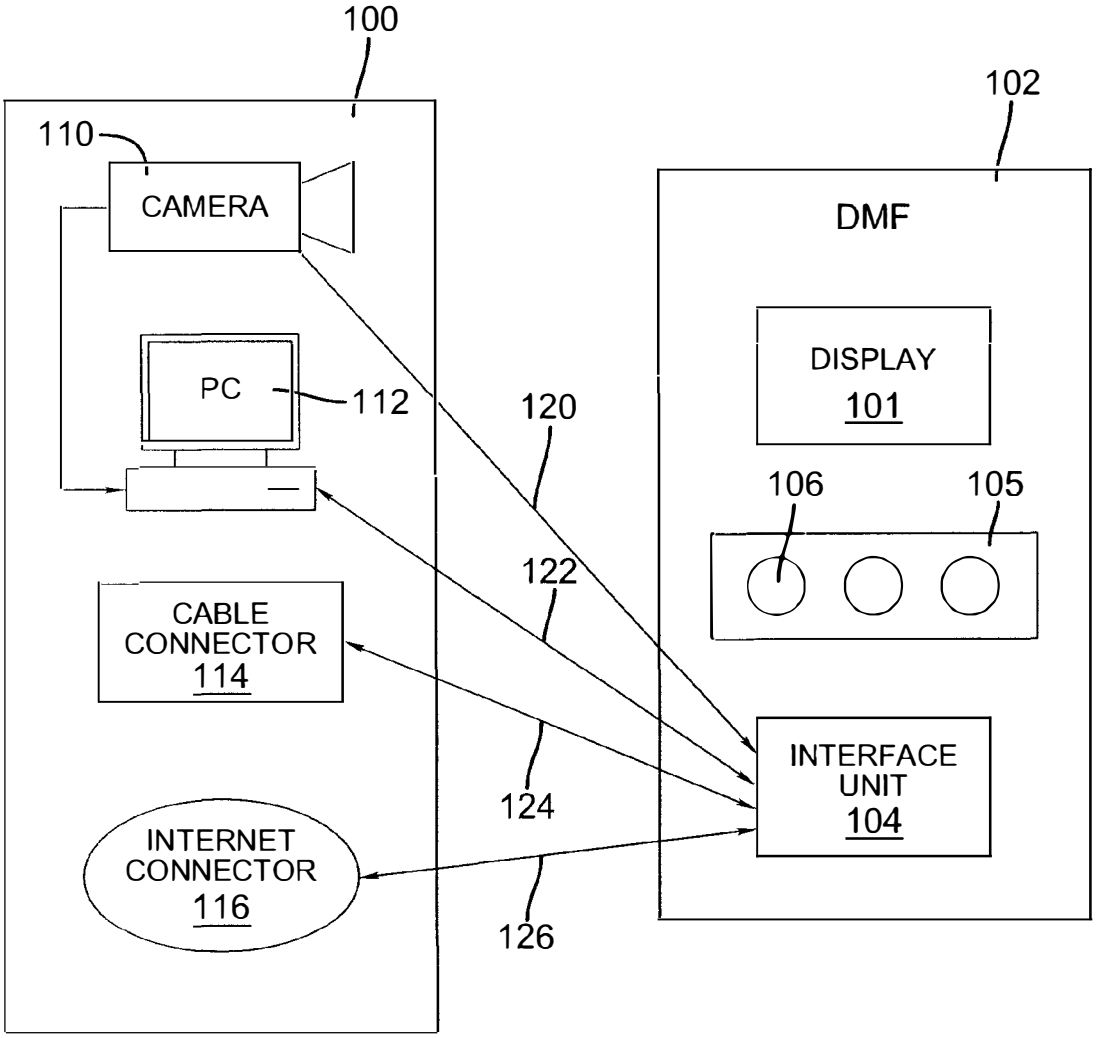
100
102
110
CAMERA
DMF
DISPLAY
101
PC
112
120
106
105
122
CABLE
CONNECTOR
114
INTERFACE
UNIT
104
124
INTERNET
CONNECTOR
116
126

FIG. 1

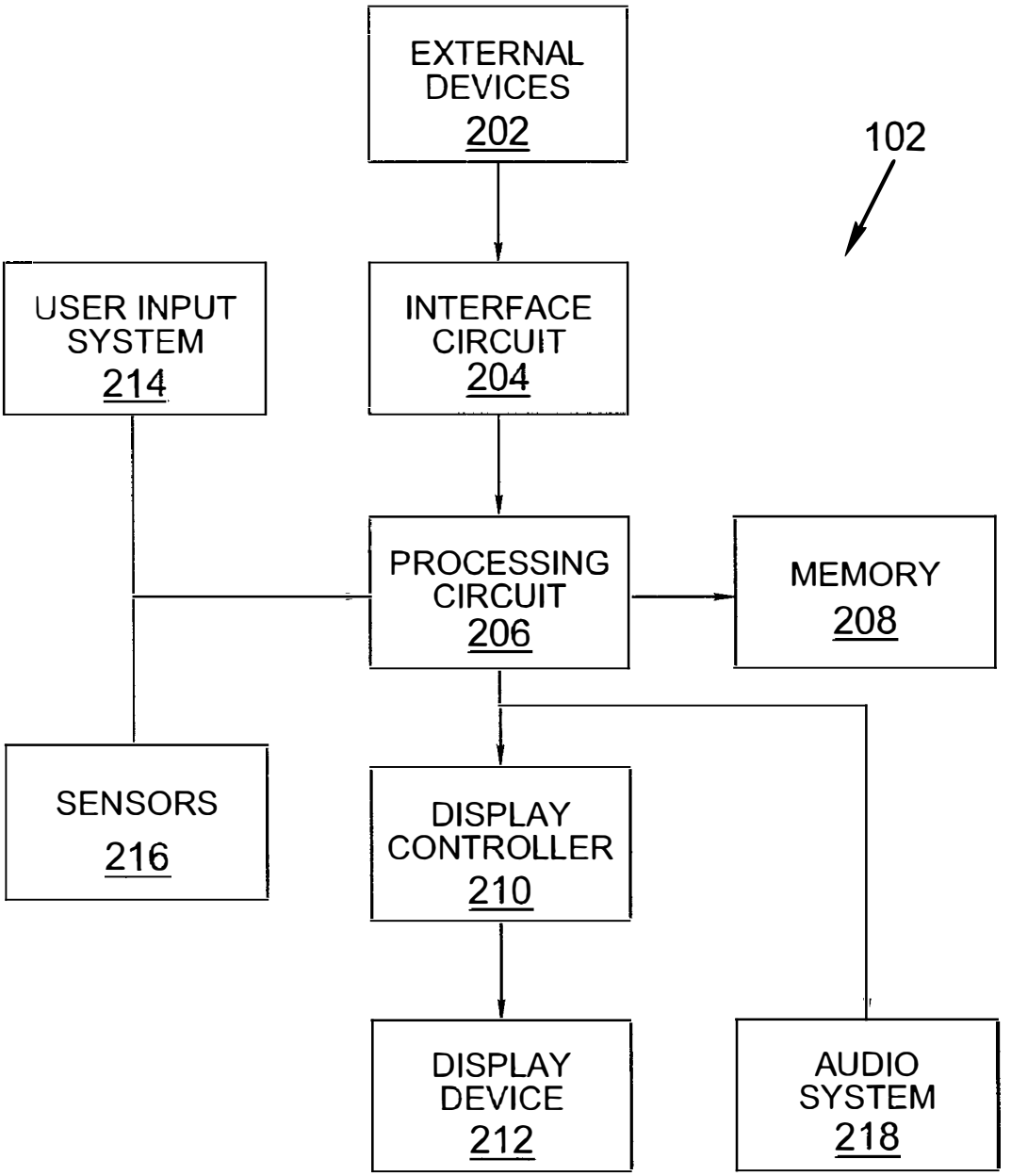
EXTERNAL DEVICES 202
102
USER INPUT SYSTEM 214
INTERFACE CIRCUIT 204
PROCESSING CIRCUIT 206
MEMORY 208
SENSORS 216
DISPLAY CONTROLLER 210
DISPLAY DEVICE 212
AUDIO SYSTEM 218

FIG. 2

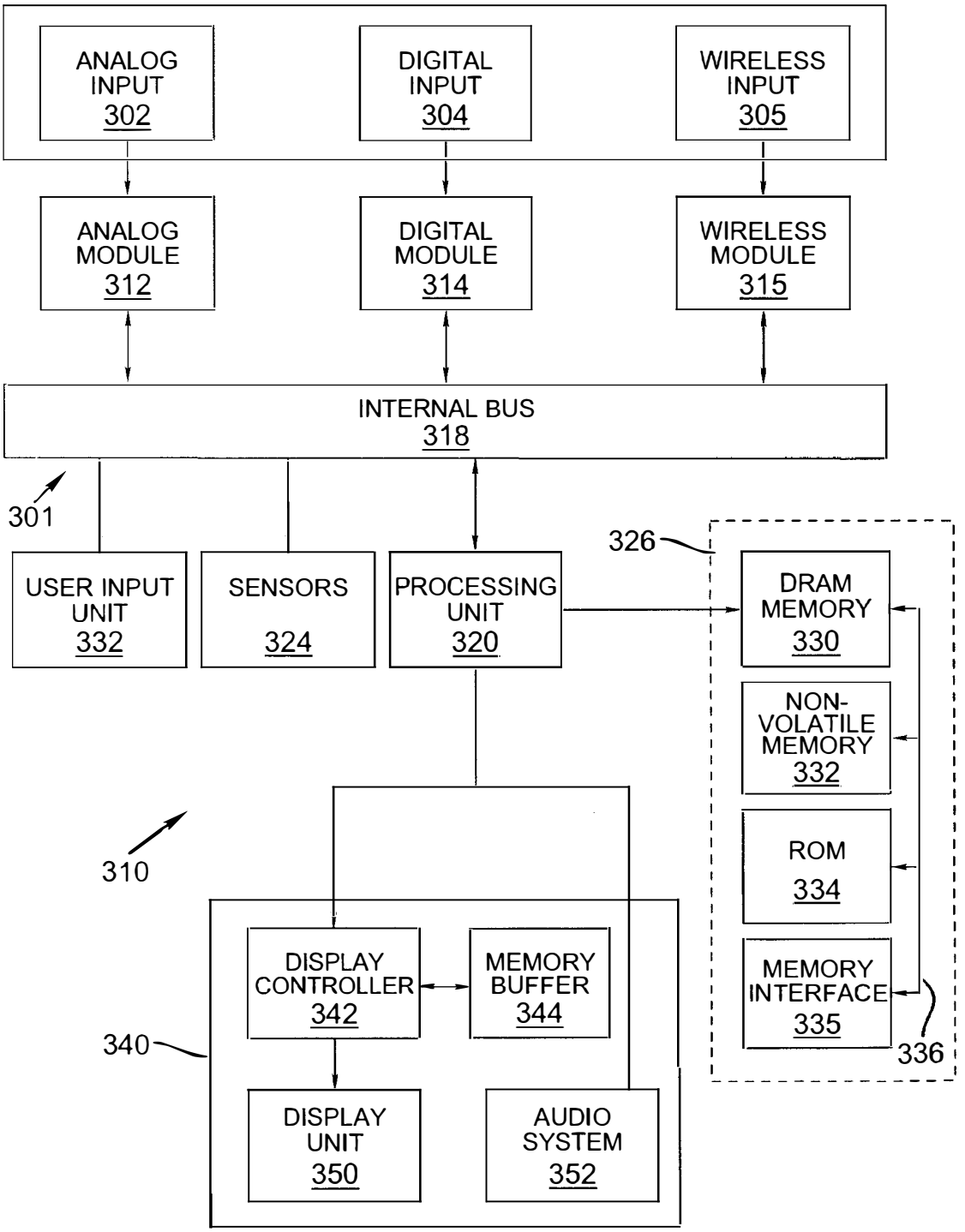
ANALOG INPUT 302
DIGITAL INPUT 304
WIRELESS INPUT 305
ANALOG MODULE 312
DIGITAL MODULE 314
WIRELESS MODULE 315
INTERNAL BUS 318
301
USER INPUT UNIT 332
SENSORS 324
PROCESSING UNIT 320
326
DRAM MEMORY 330
NON-VOLATILE MEMORY 332
ROM 334
MEMORY INTERFACE 335
336
310
340
DISPLAY CONTROLLER 342
MEMORY BUFFER 344
DISPLAY UNIT 350
AUDIO SYSTEM 352

FIG. 3

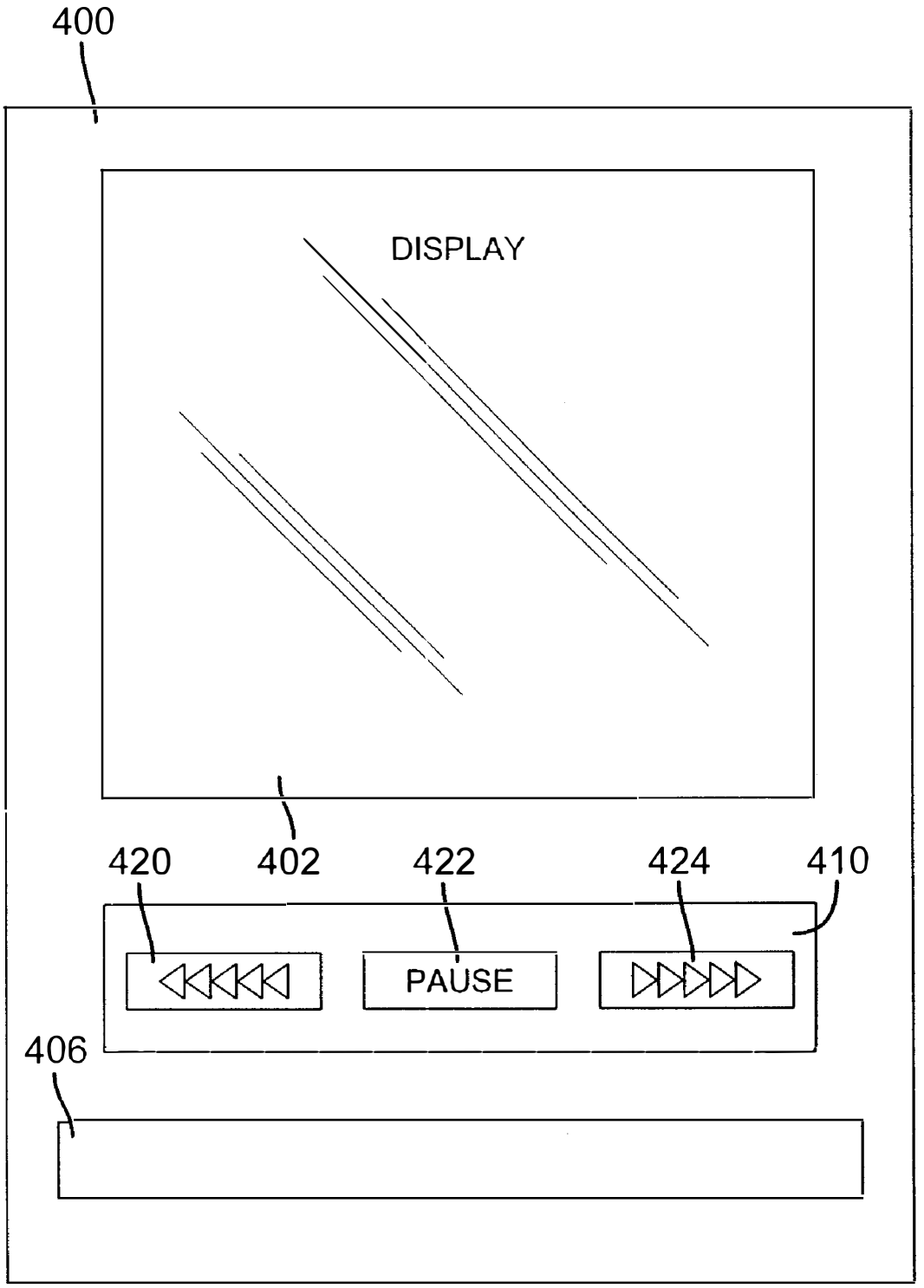

FIG. 4

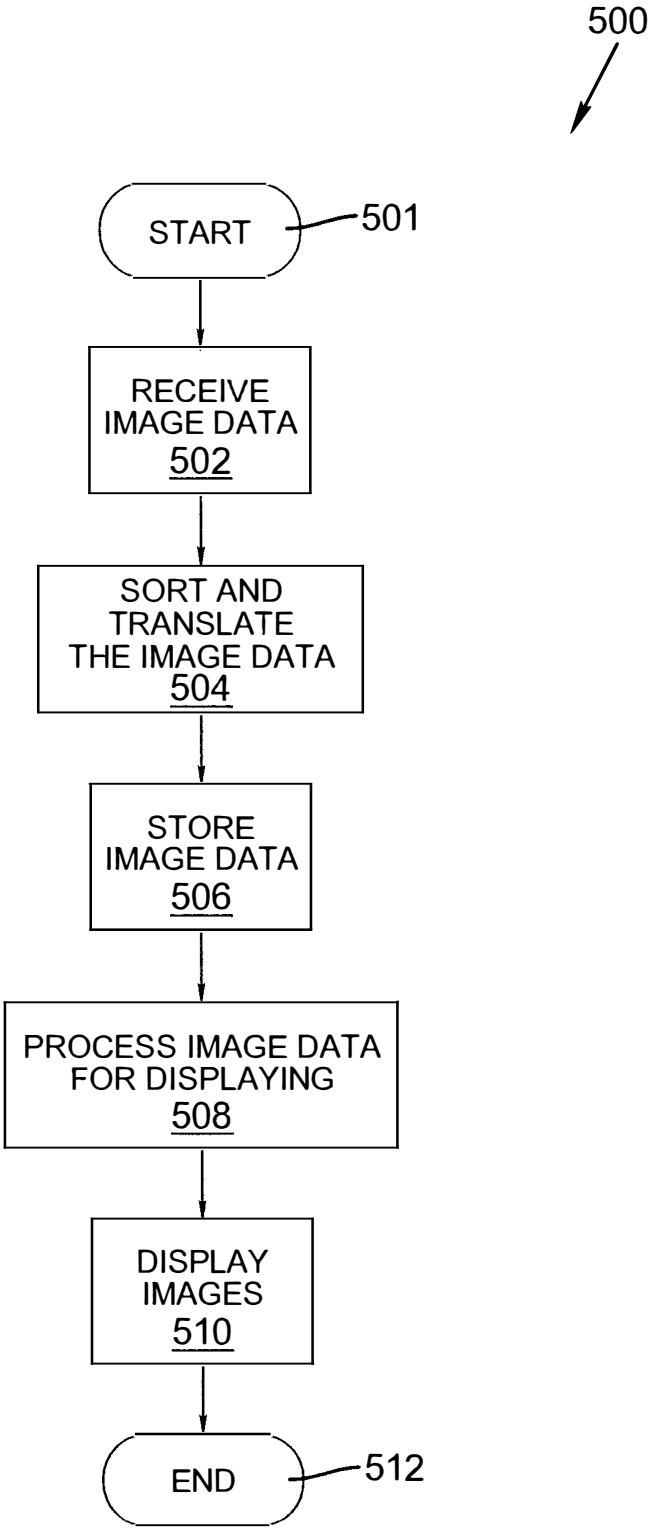
500
START
501
RECEIVE IMAGE DATA 502
SORT AND TRANSLATE THE IMAGE DATA 504
STORE IMAGE DATA 506
PROCESS IMAGE DATA FOR DISPLAYING 508
DISPLAY IMAGES 510
END
512

FIG. 5

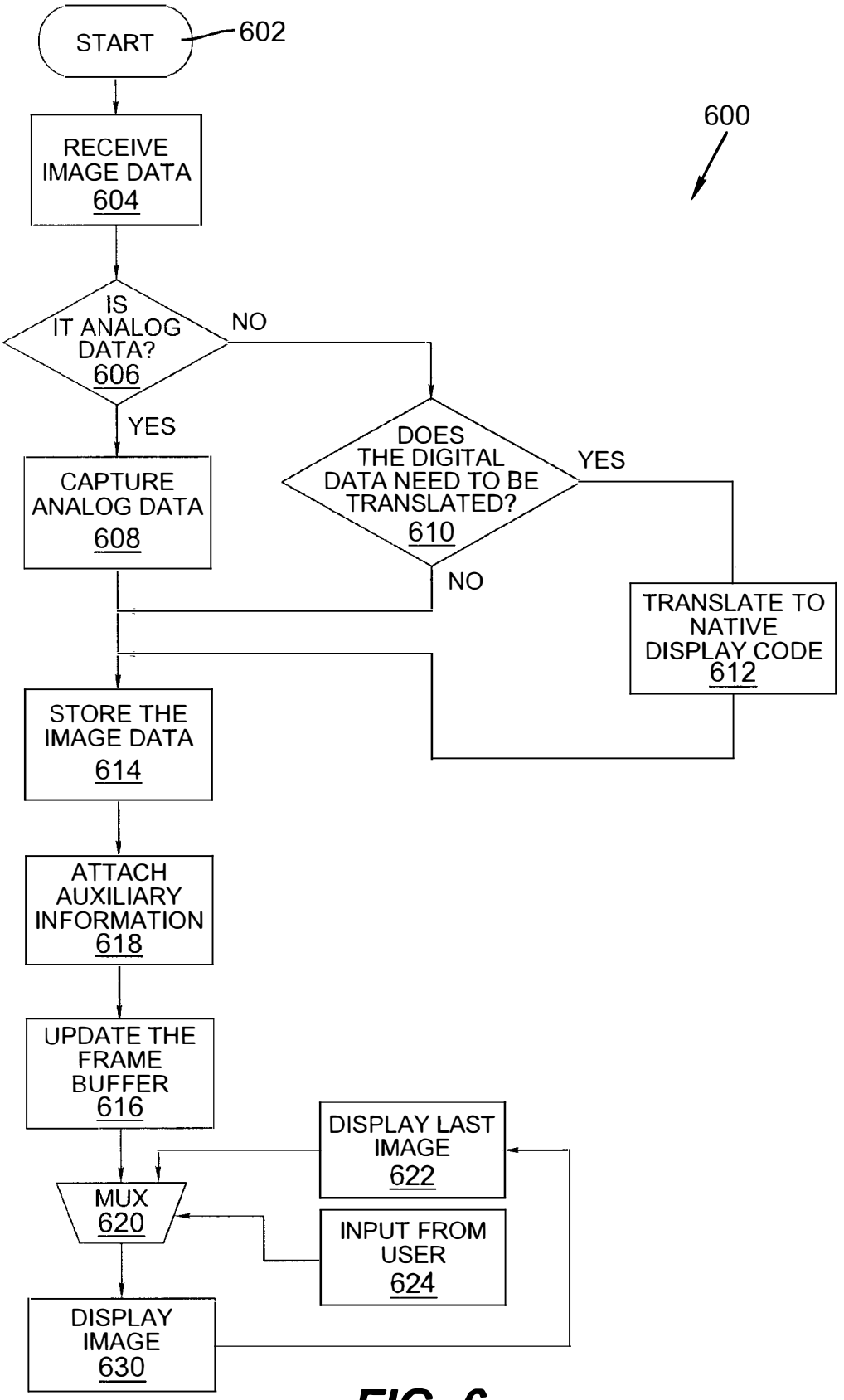
START
602
600
RECEIVE IMAGE DATA 604
IS IT ANALOG DATA? 606
NO
YES
CAPTURE ANALOG DATA 608
DOES THE DIGITAL DATA NEED TO BE TRANSLATED? 610
YES
NO
TRANSLATE TO NATIVE DISPLAY CODE 612
STORE THE IMAGE DATA 614
ATTACH AUXILIARY INFORMATION 618
UPDATE THE FRAME BUFFER 616
DISPLAY LAST IMAGE 622
MUX 620
INPUT FROM USER 624
DISPLAY IMAGE 630

FIG. 6

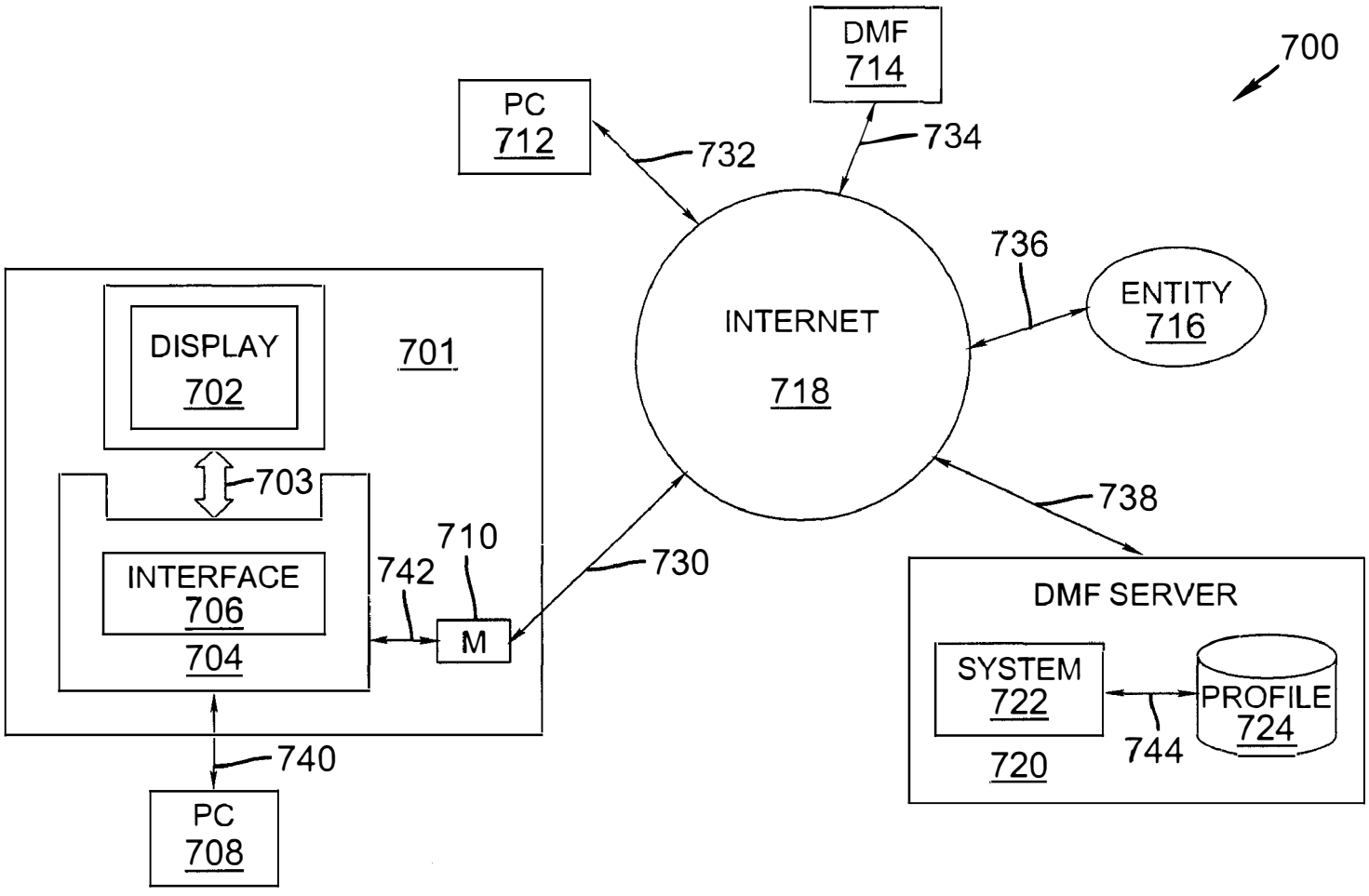
700
DMF
714
PC
712
732
734
736
ENTITY
716
INTERNET
718
DISPLAY
702
701
703
710
742
INTERFACE
706
704
M
730
738
DMF SERVER
SYSTEM
722
PROFILE
724
744
720
740
PC
708

FIG. 7

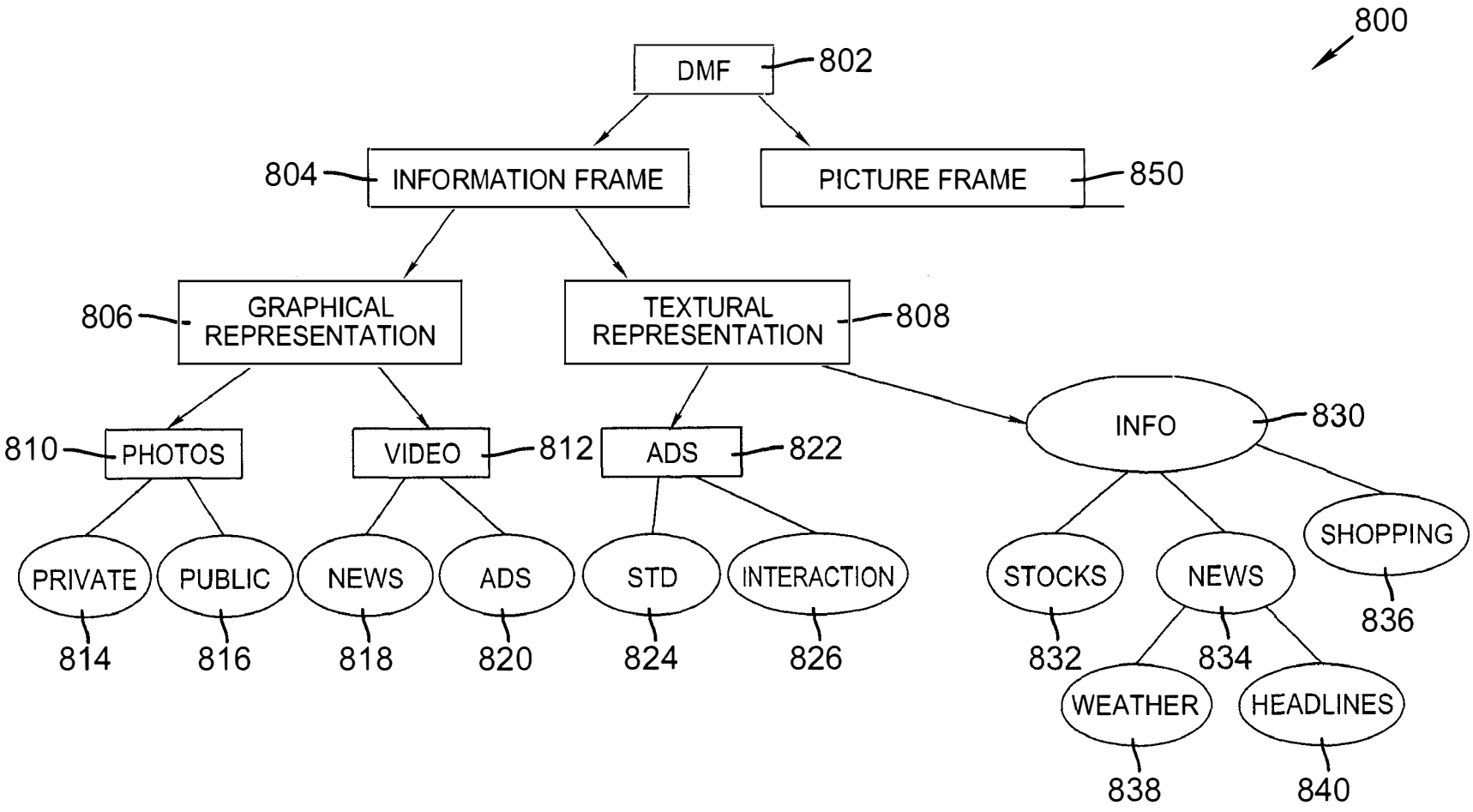
800
DMF
802
INFORMATION FRAME
804
PICTURE FRAME
850
GRAPHICAL REPRESENTATION
806
TEXTURAL REPRESENTATION
808
PHOTOS
810
VIDEO
812
ADS
822
INFO
830
PRIVATE
814
PUBLIC
816
NEWS
818
ADS
820
STD
824
INTERACTION
826
STOCKS
832
NEWS
834
SHOPPING
836
WEATHER
838
HEADLINES
840

FIG. 8

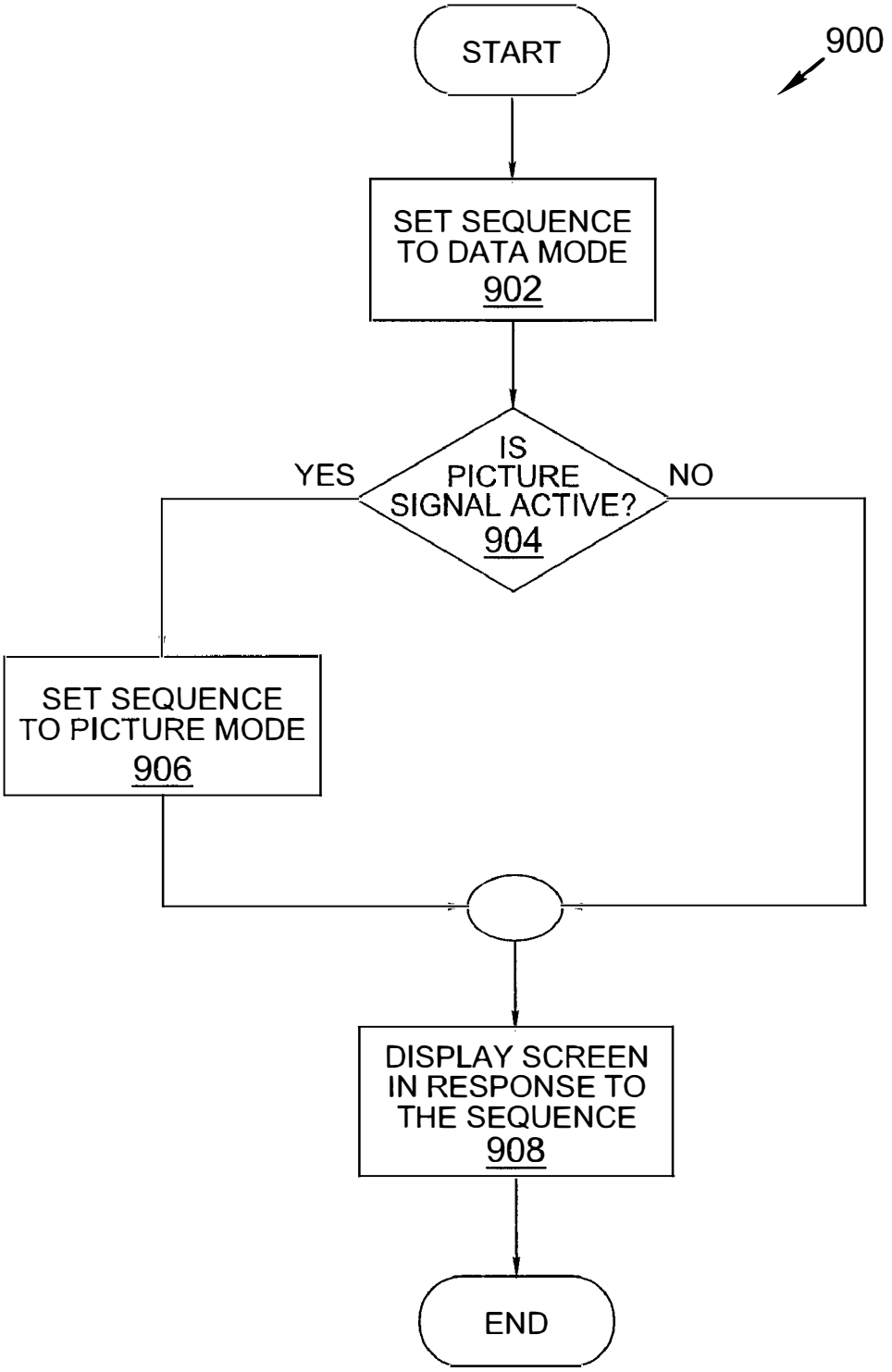
900
START
SET SEQUENCE TO DATA MODE
902
IS PICTURE SIGNAL ACTIVE?
904
YES
NO
SET SEQUENCE TO PICTURE MODE
906
DISPLAY SCREEN IN RESPONSE TO THE SEQUENCE
908
END

FIG. 9

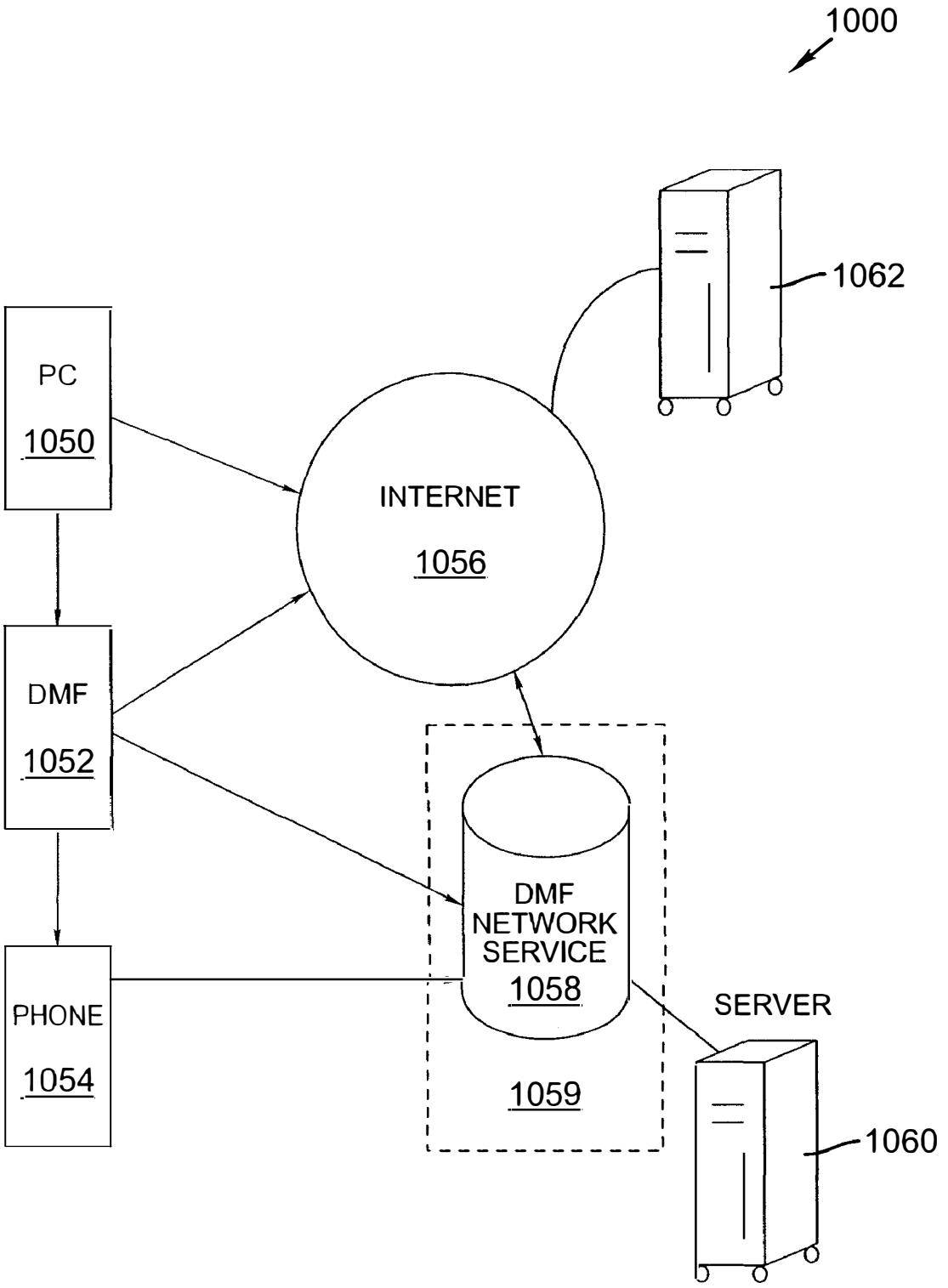
1000
1062
PC
1050
INTERNET
1056
DMF
1052
DMF
NETWORK
SERVICE
1058
PHONE
1054
1059
SERVER
1060

FIG. 10

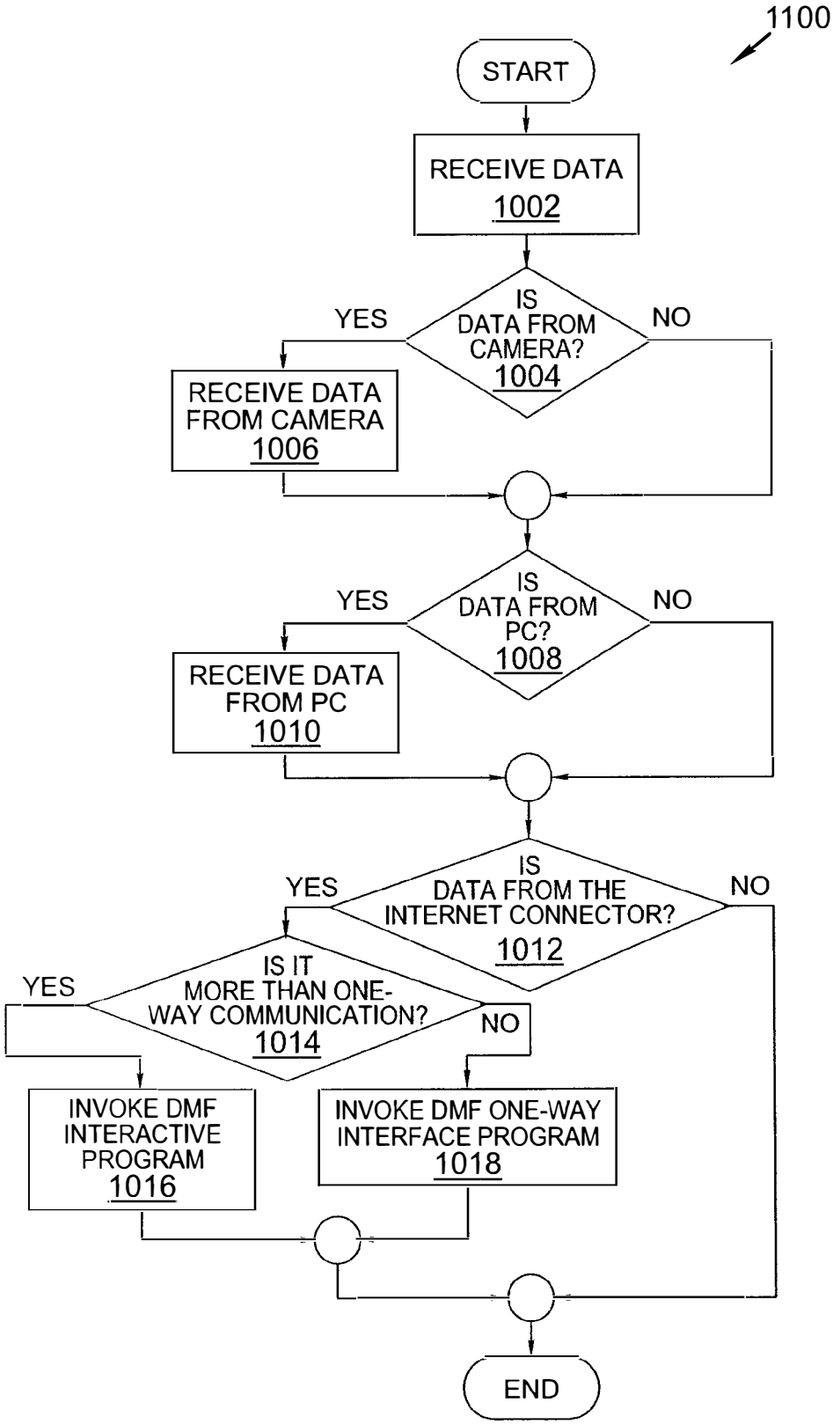
1100
START
RECEIVE DATA
1002
IS DATA FROM CAMERA?
1004
YES
NO
RECEIVE DATA FROM CAMERA
1006
IS DATA FROM PC?
1008
YES
NO
RECEIVE DATA FROM PC
1010
IS DATA FROM THE INTERNET CONNECTOR?
1012
YES
NO
IS IT MORE THAN ONE-WAY COMMUNICATION?
1014
YES
NO
INVOKE DMF INTERACTIVE PROGRAM
1016
INVOKE DMF ONE-WAY INTERFACE PROGRAM
1018
END

FIG. 11

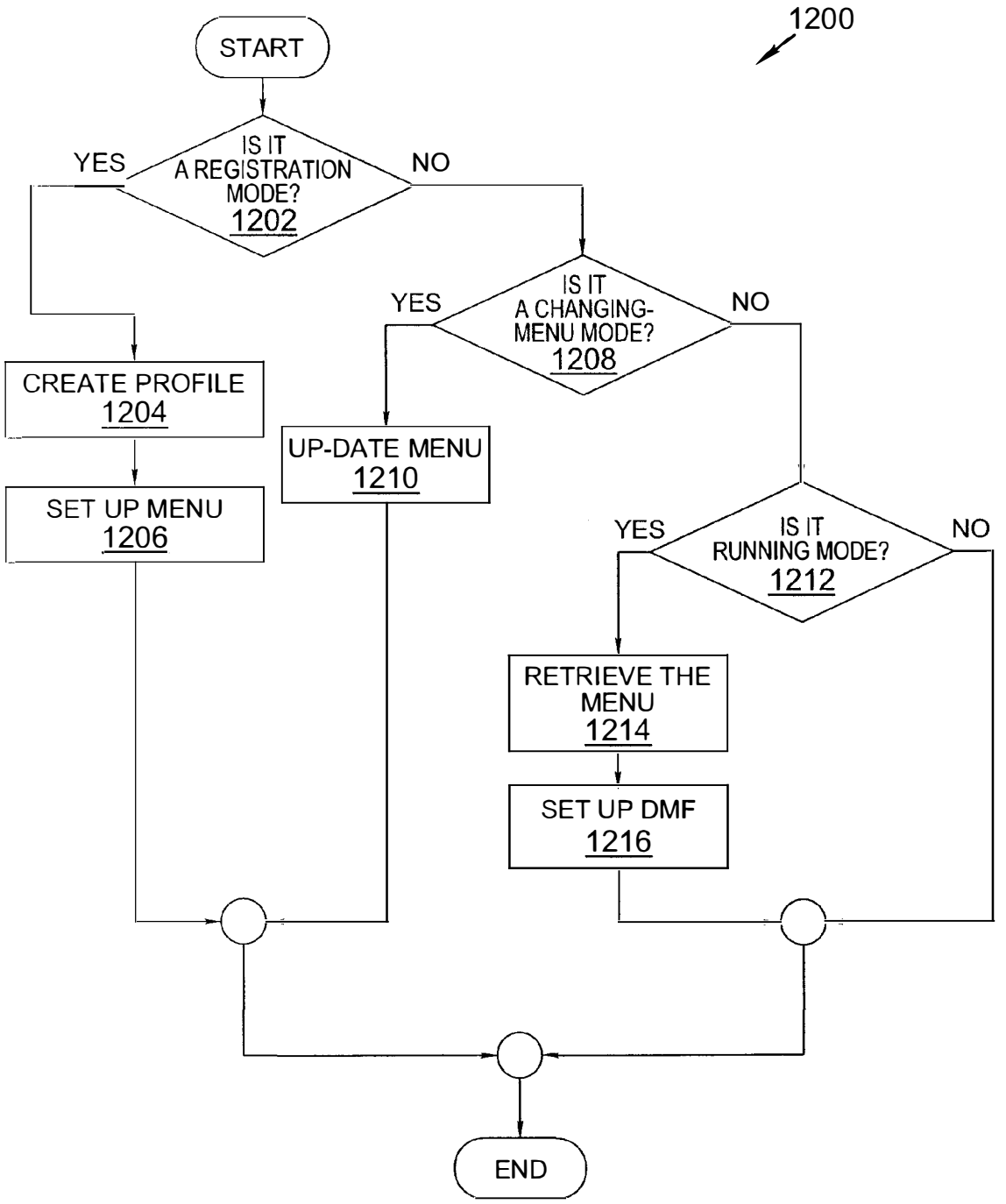
1200
START
IS IT A REGISTRATION MODE? 1202
YES
NO
CREATE PROFILE 1204
SET UP MENU 1206
IS IT A CHANGING-MENU MODE? 1208
YES
NO
UP-DATE MENU 1210
IS IT RUNNING MODE? 1212
YES
NO
RETRIEVE THE MENU 1214
SET UP DMF 1216
END

FIG. 12

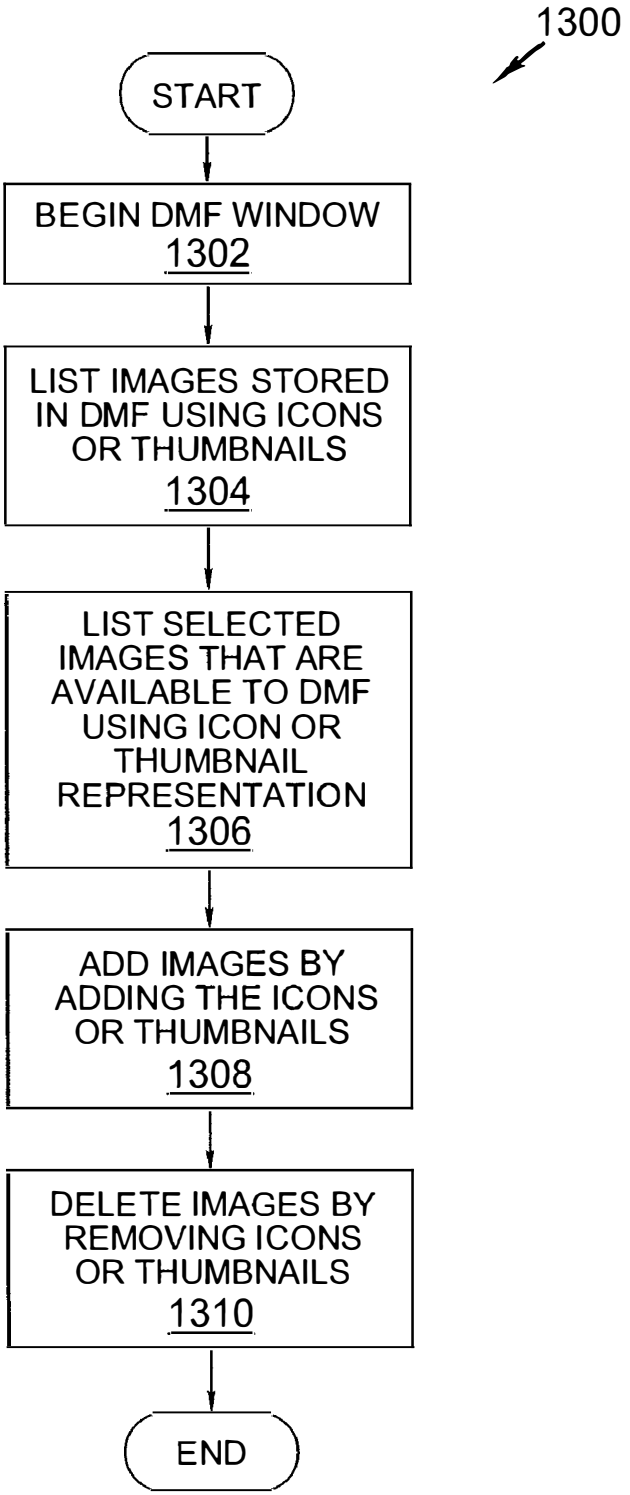
1300
START
BEGIN DMF WINDOW
1302
LIST IMAGES STORED IN DMF USING ICONS OR THUMBNAILS
1304
LIST SELECTED IMAGES THAT ARE AVAILABLE TO DMF USING ICON OR THUMBNAIL REPRESENTATION
1306
ADD IMAGES BY ADDING THE ICONS OR THUMBNAILS
1308
DELETE IMAGES BY REMOVING ICONS OR THUMBNAILS
1310
END

FIG. 13

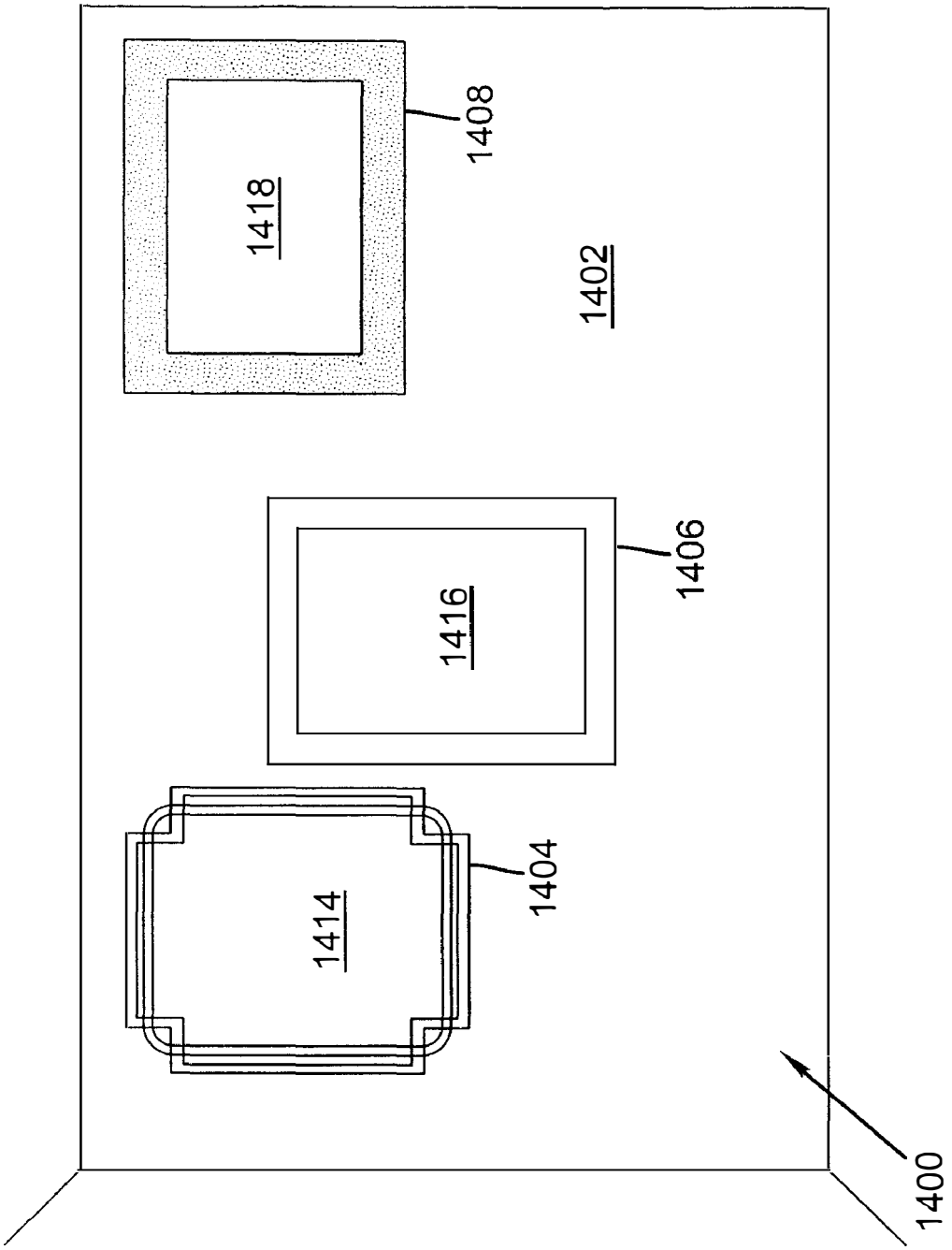

FIG. 14

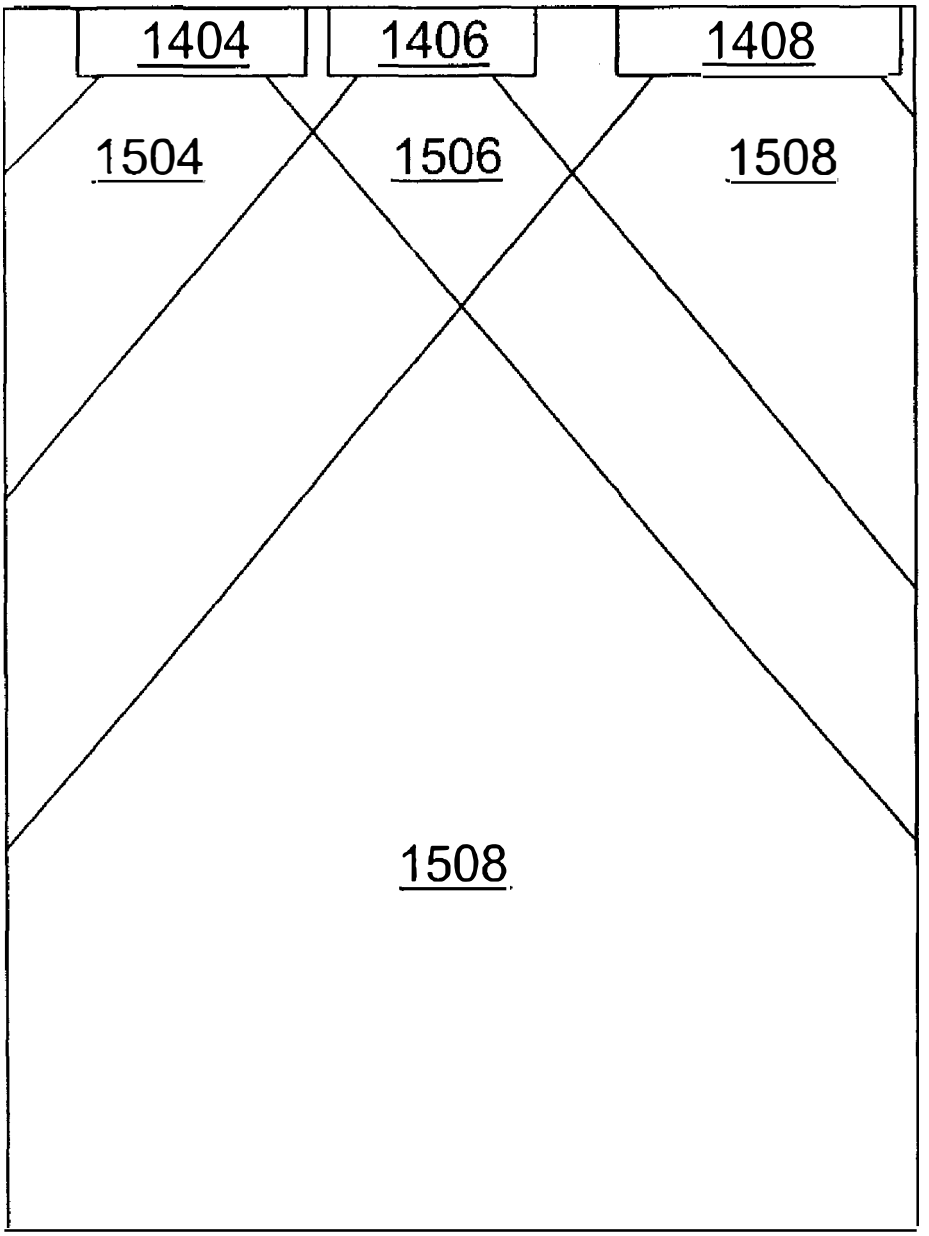

FIG. 15

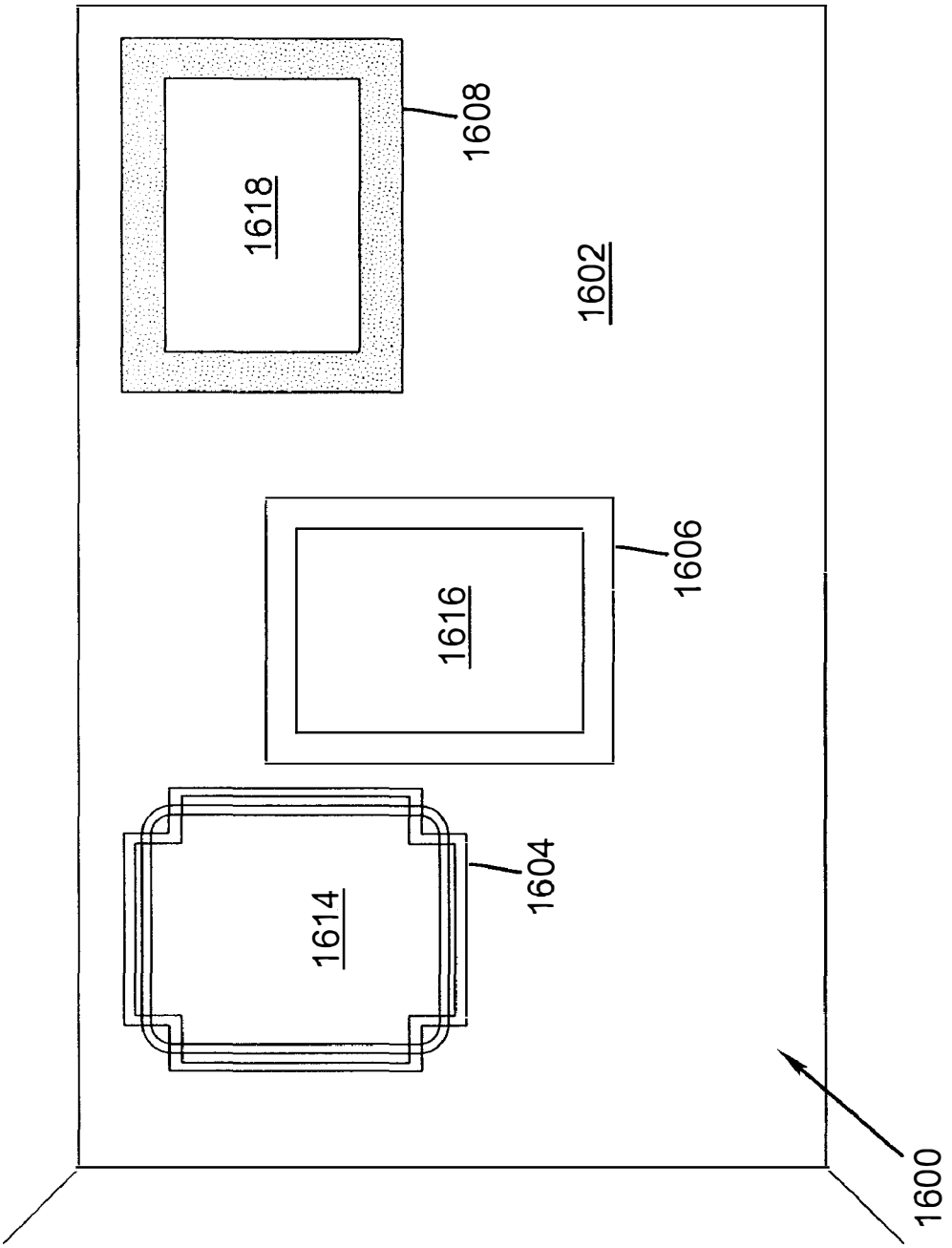

FIG. 16

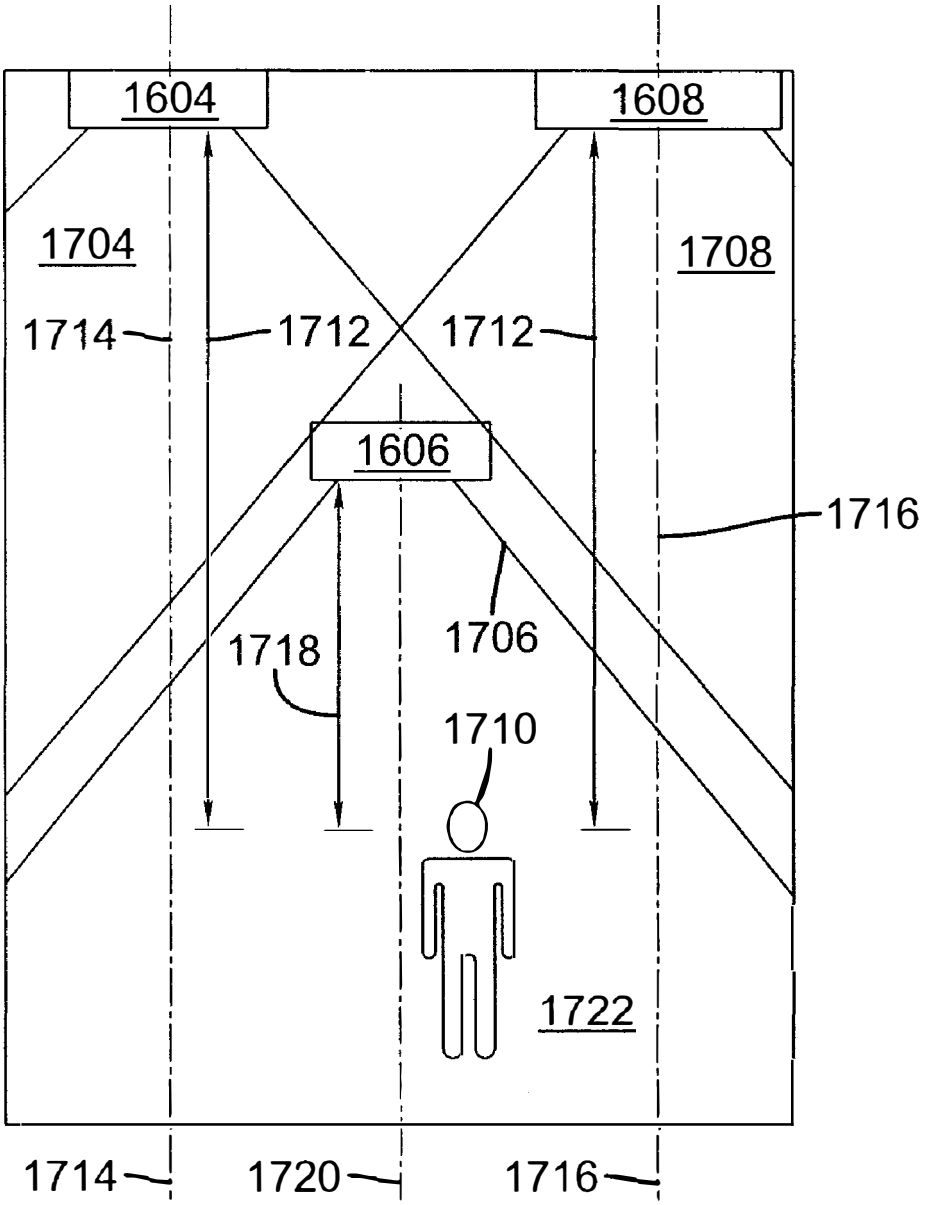
1604
1608
1704
1708
1714
1712
1712
1606
1716
1718
1706
1710
1722
1714
1720
1716

FIG. 17

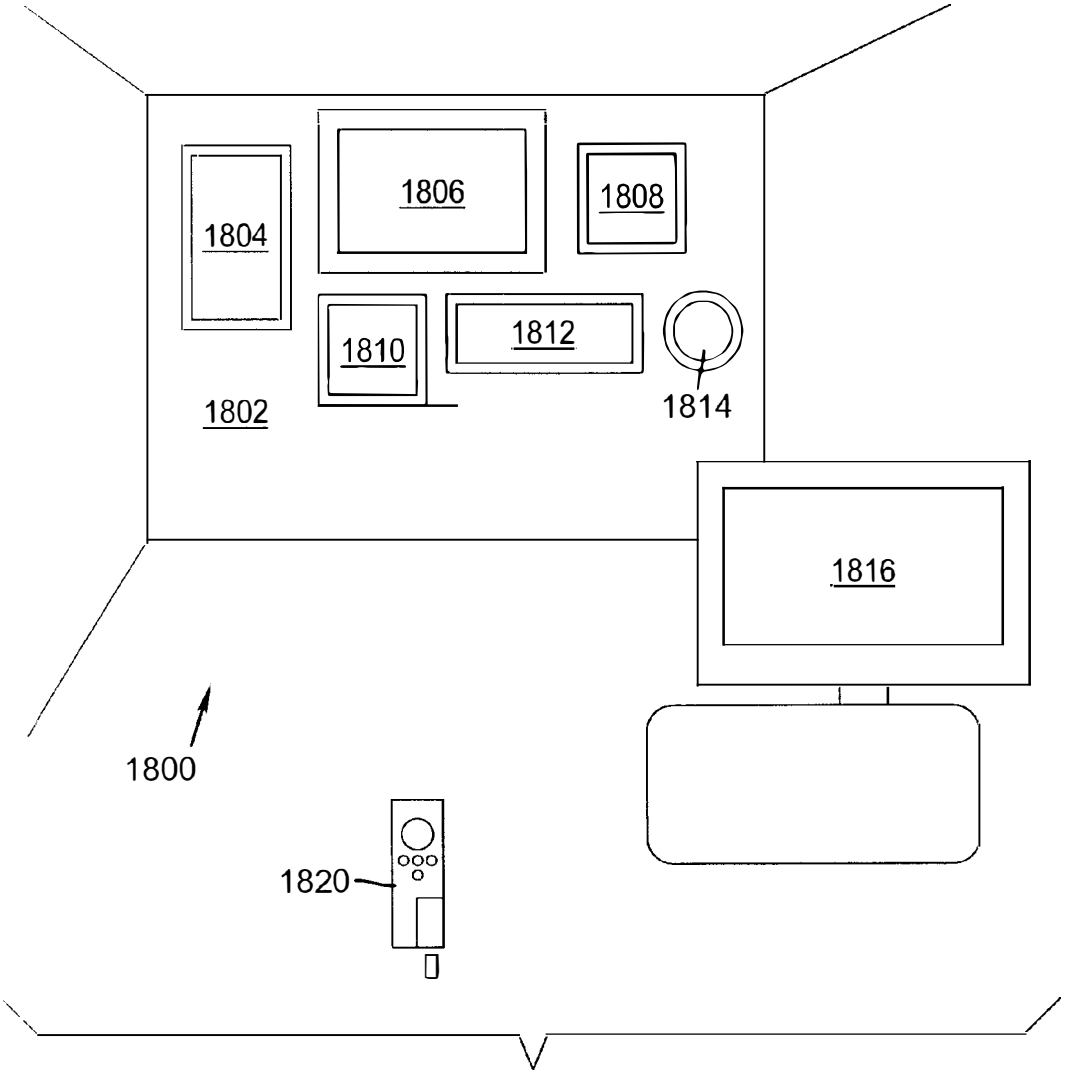

FIG. 18

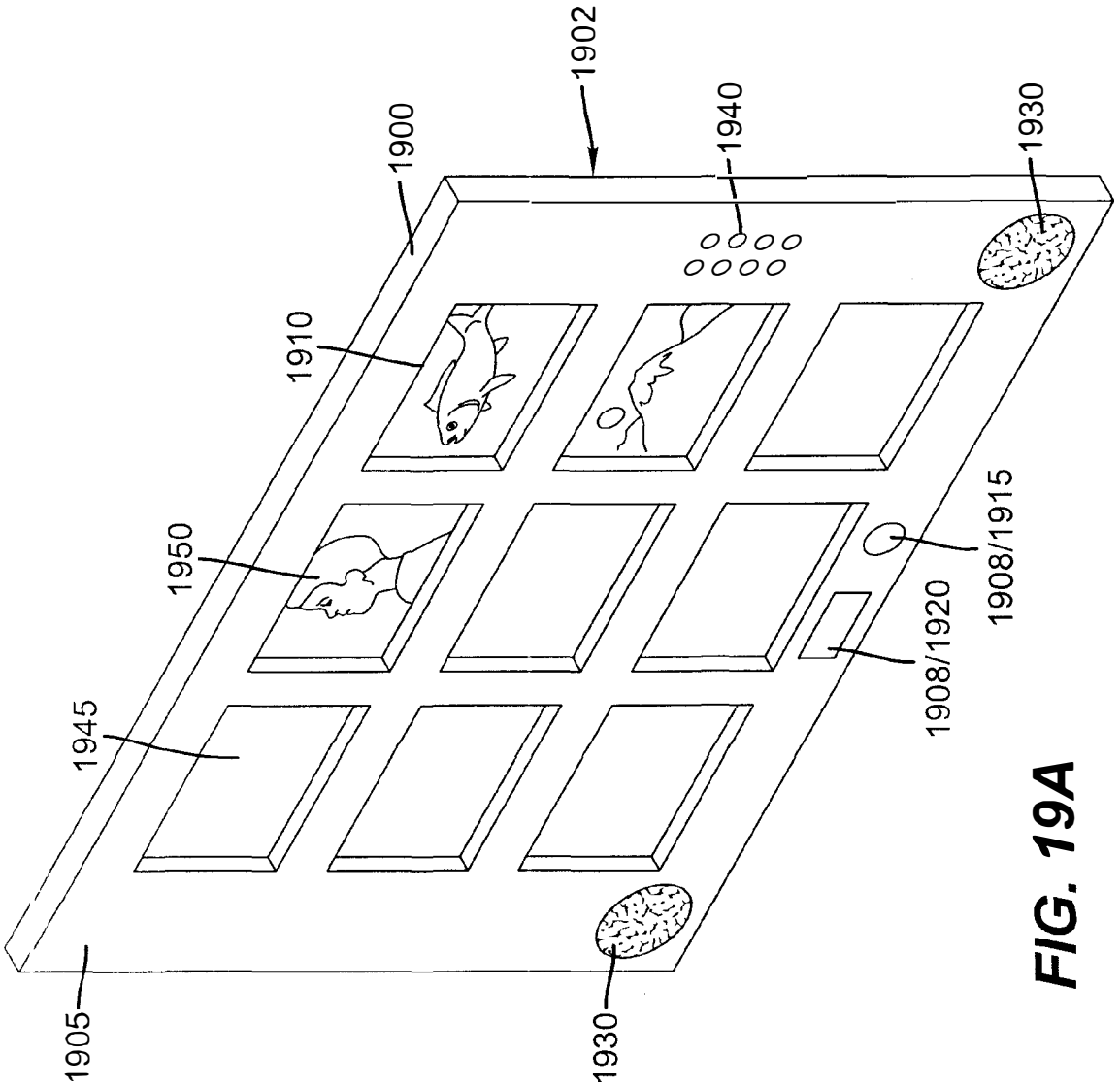
1902
1900
1940
1930
1910
1950
1908/1915
1908/1920
1945
1905
1930

FIG. 19A

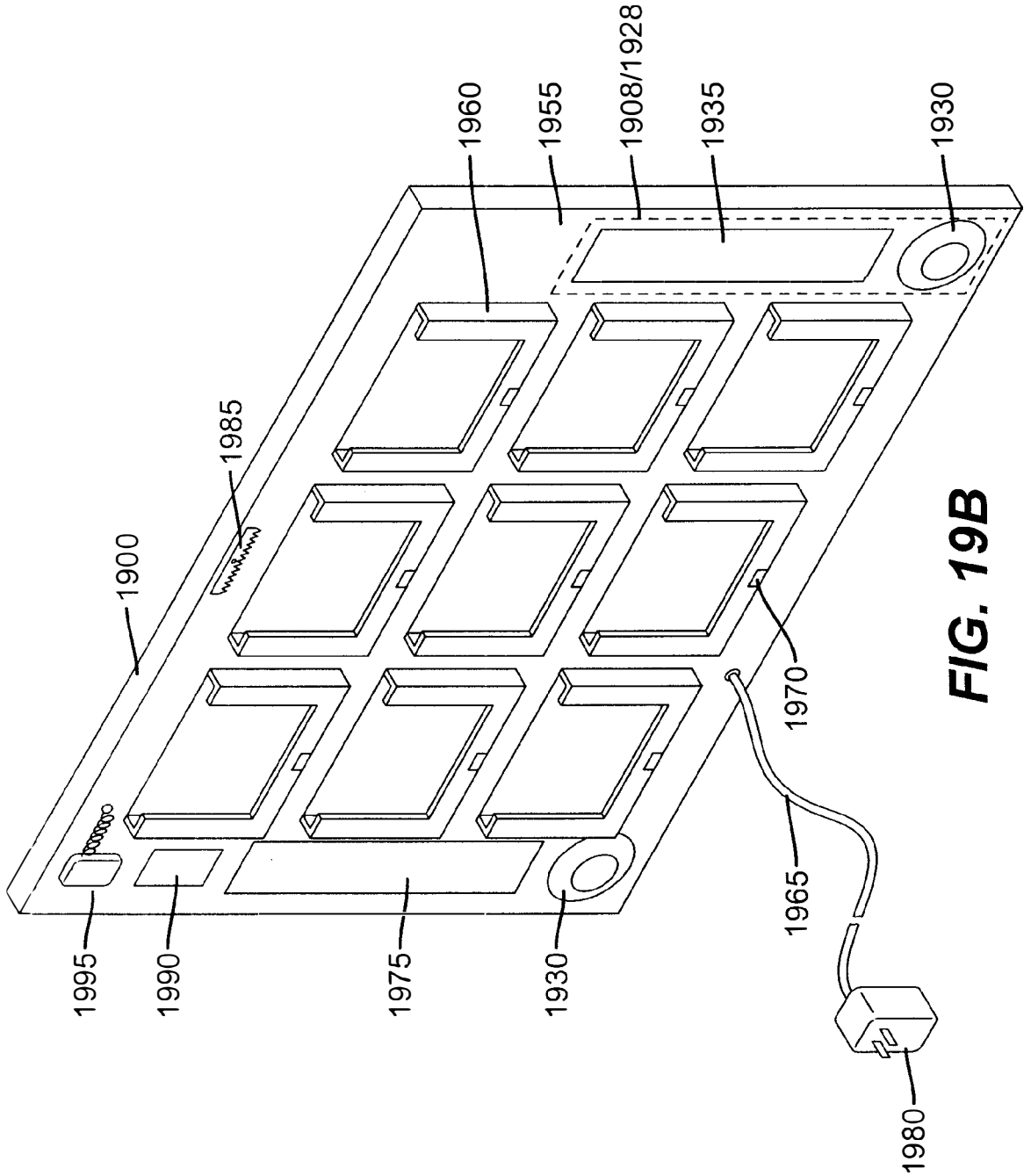
1960
1955
1908/1928
1935
1930
1985
1900
1970
1965
1995
1990
1975
1930
1980

FIG. 19B

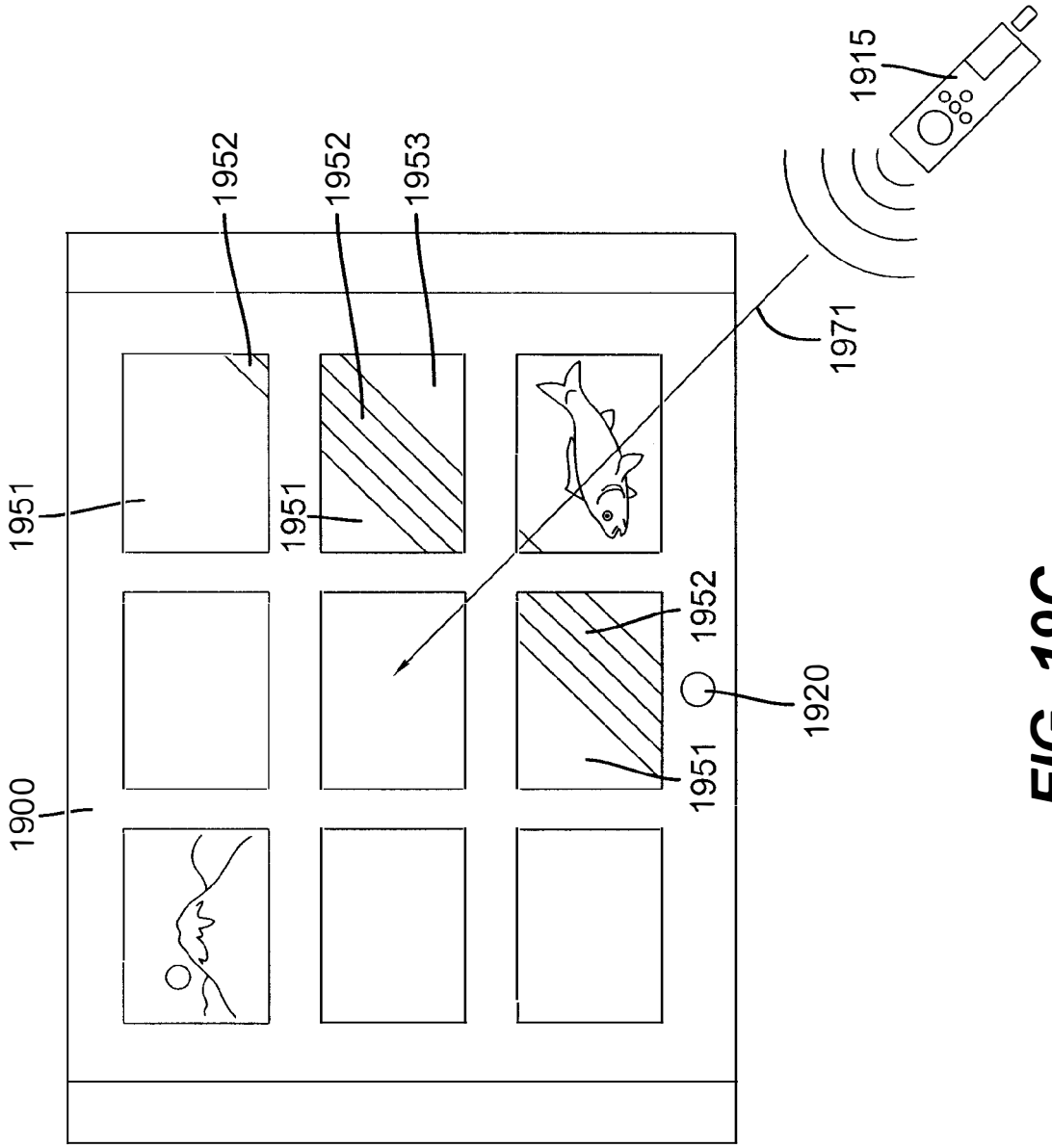

FIG. 19C

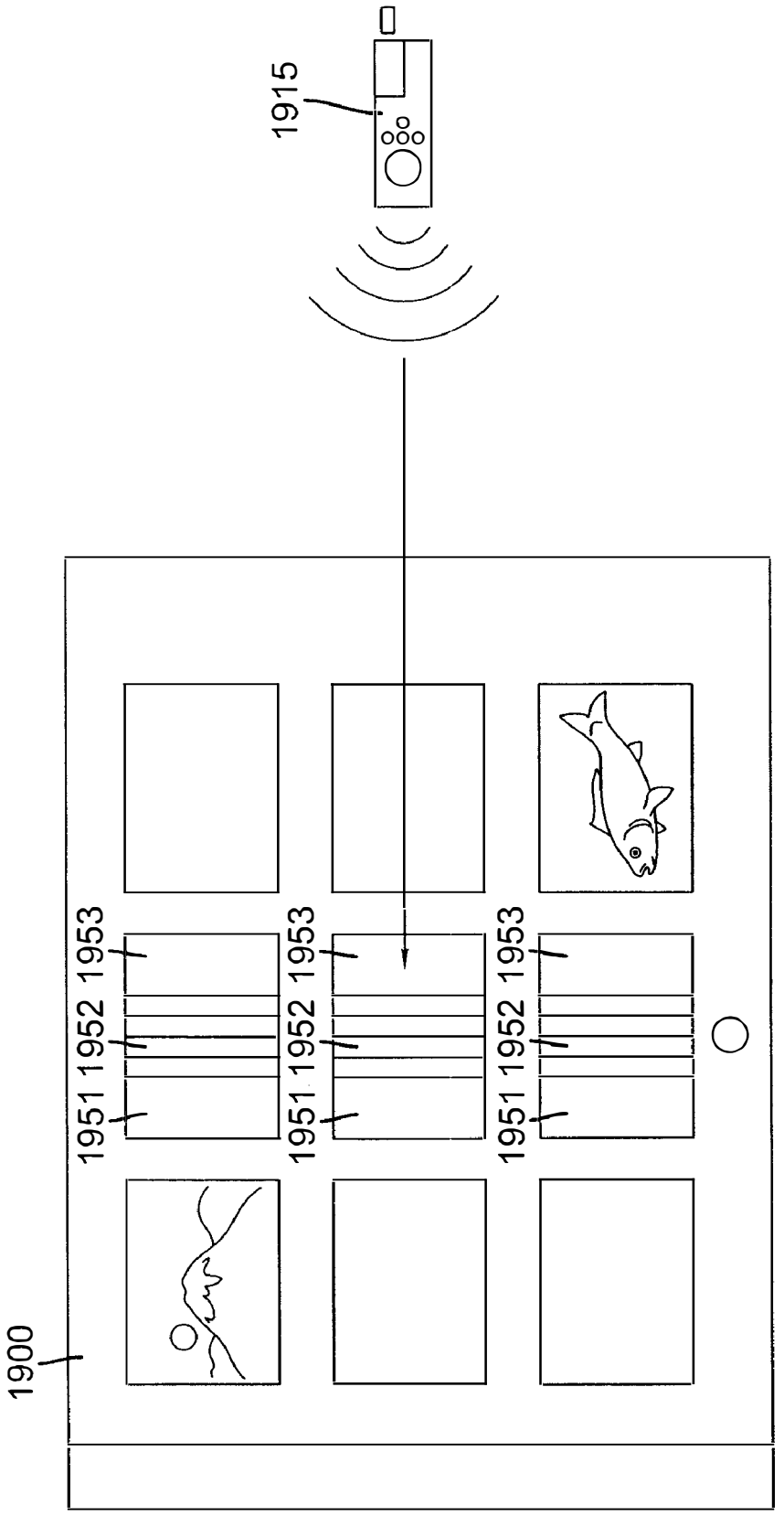

FIG. 19D

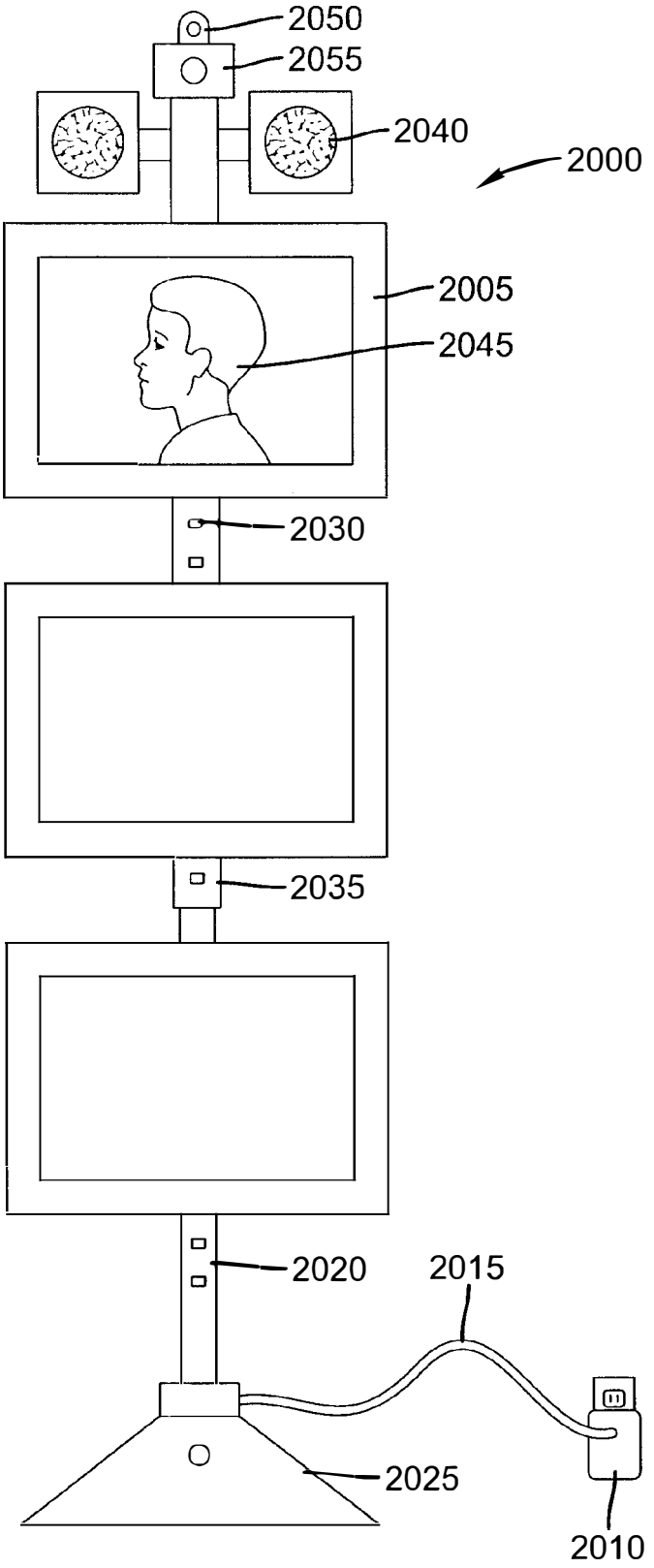

FIG. 20

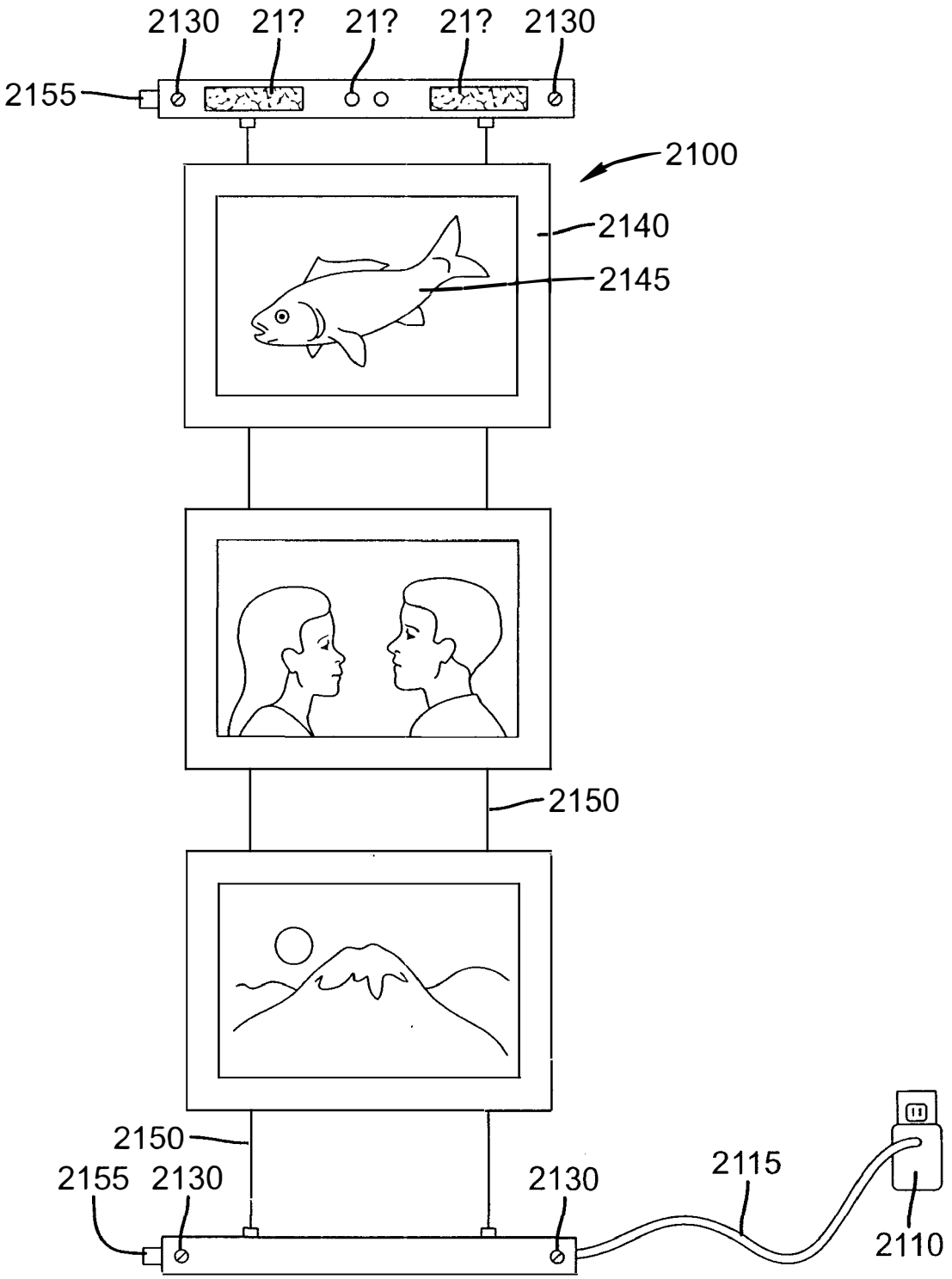
2130
21?
21?
21?
2130
2155
2100
2140
2145
2150
2150
2155
2130
2130
2115
2110

FIG. 21

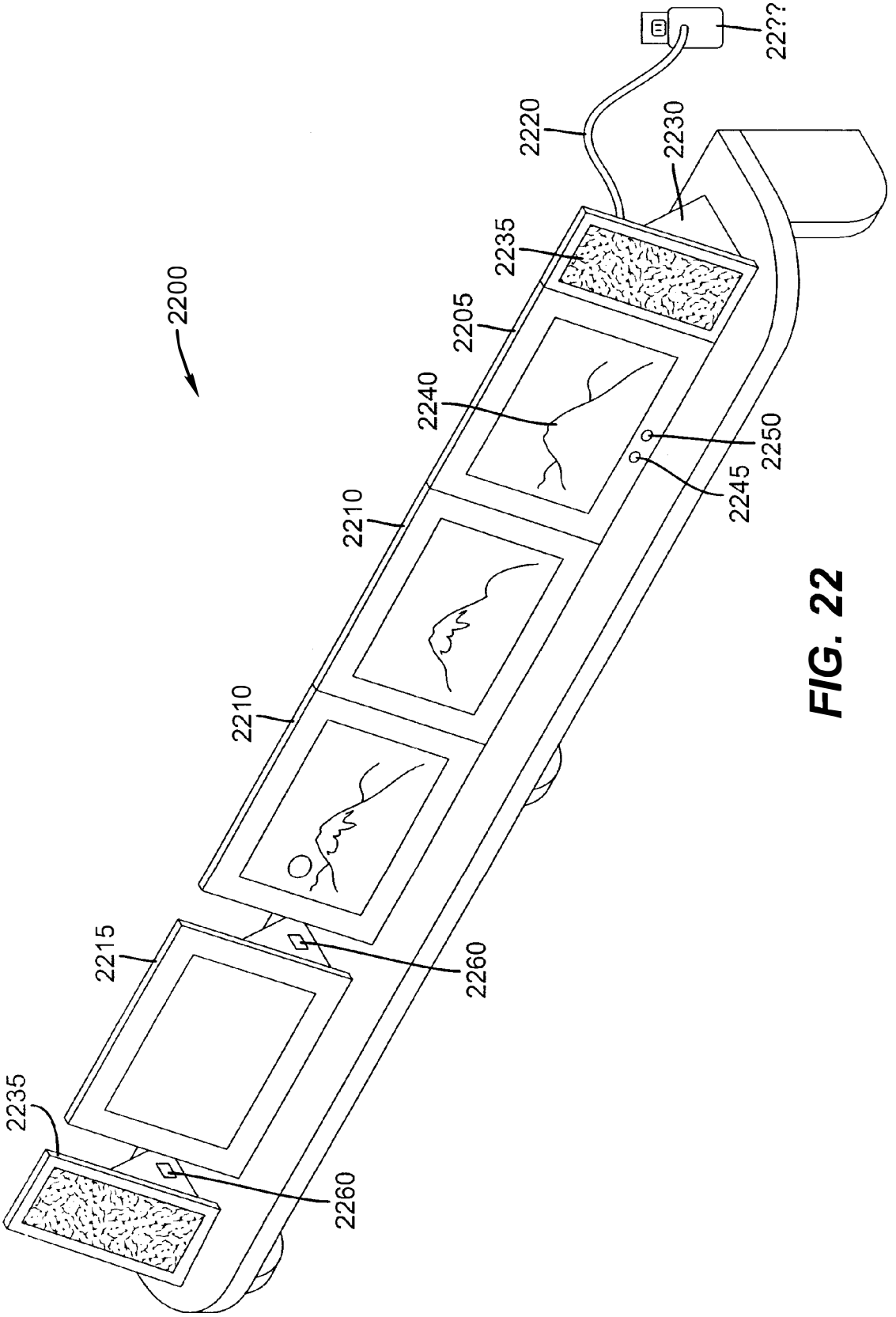
2200
2220
2230
2235
2205
2240
2250
2245
2210
2210
2215
2260
2235
2260

FIG. 22

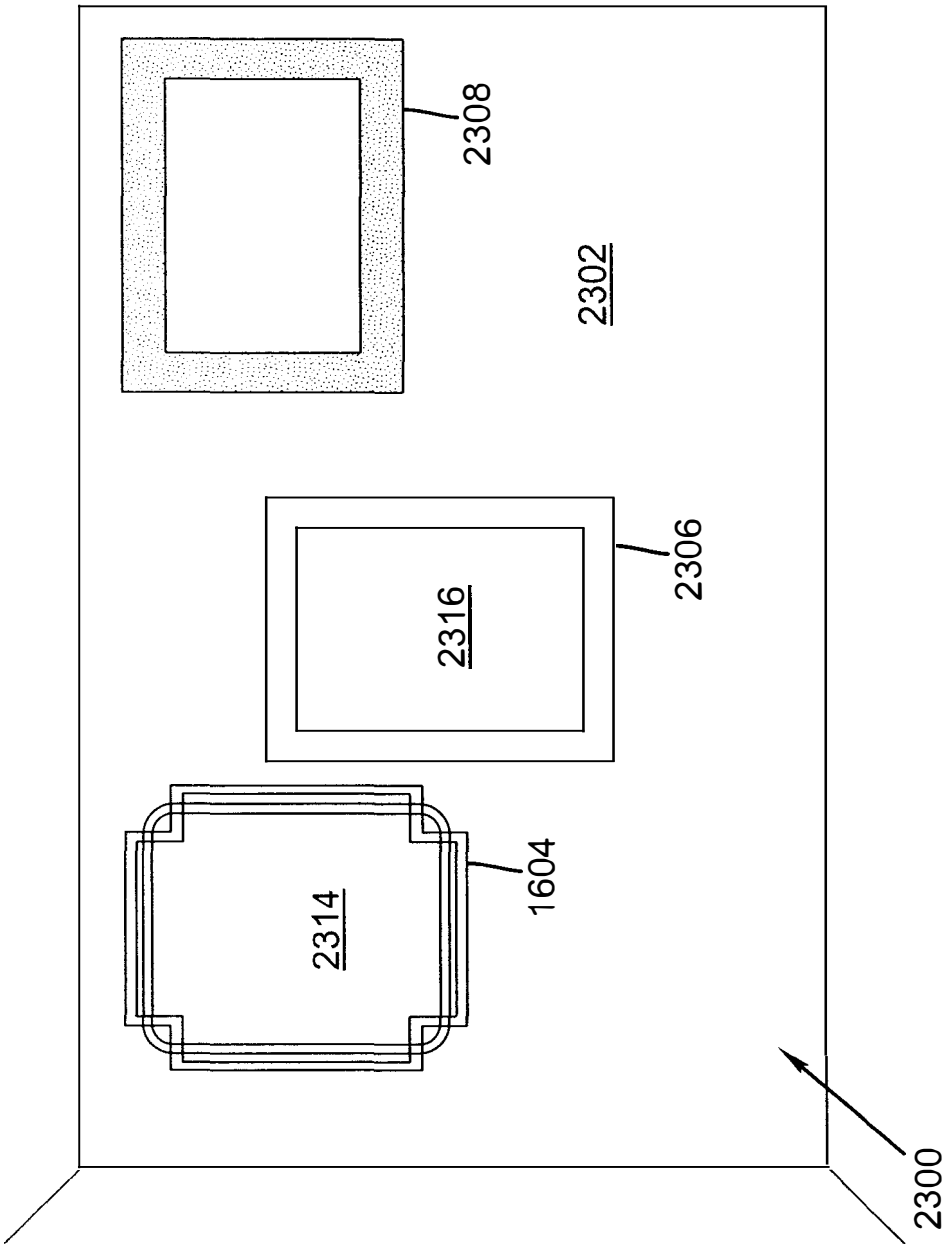

FIG. 23

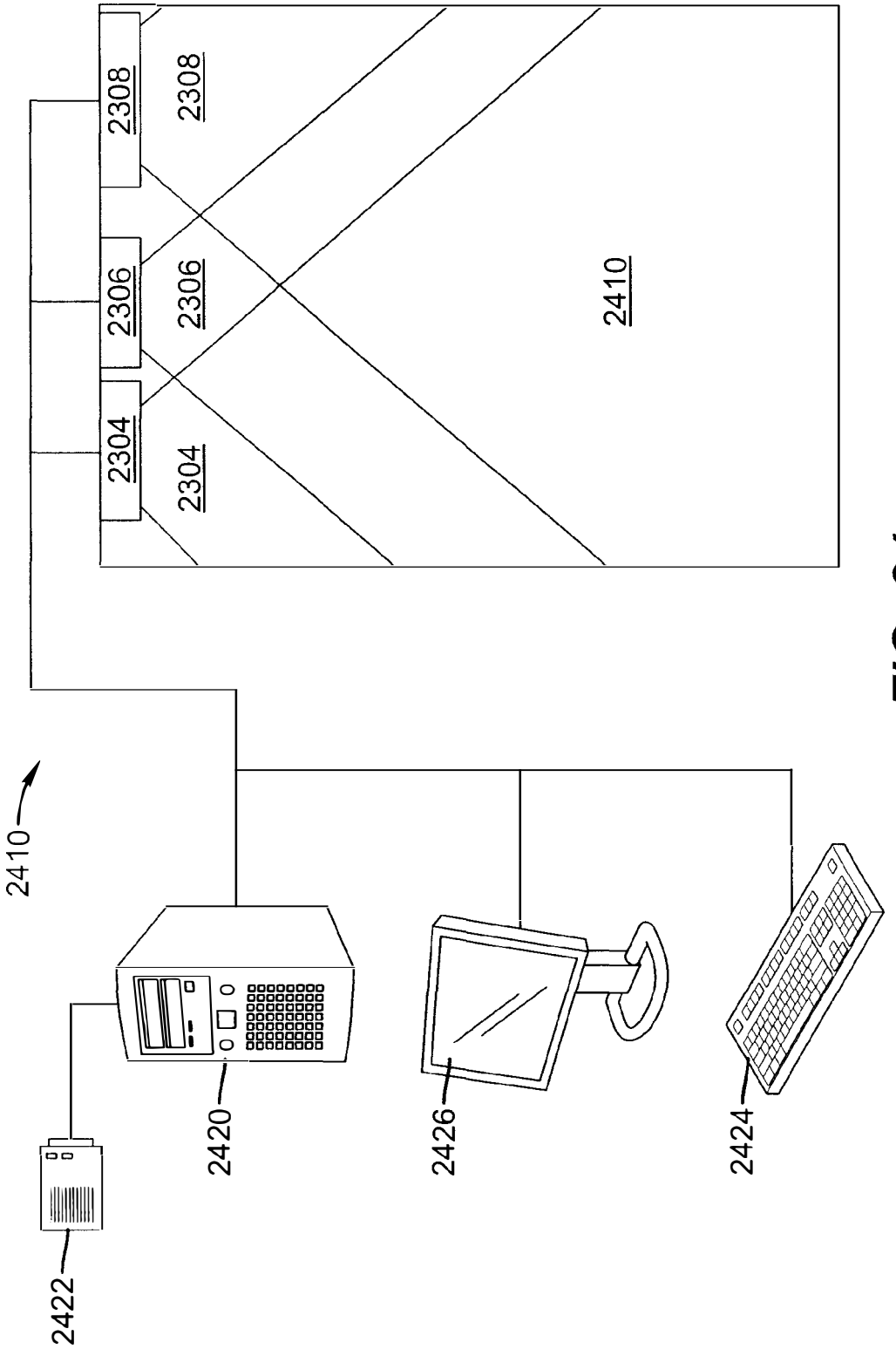

FIG. 24

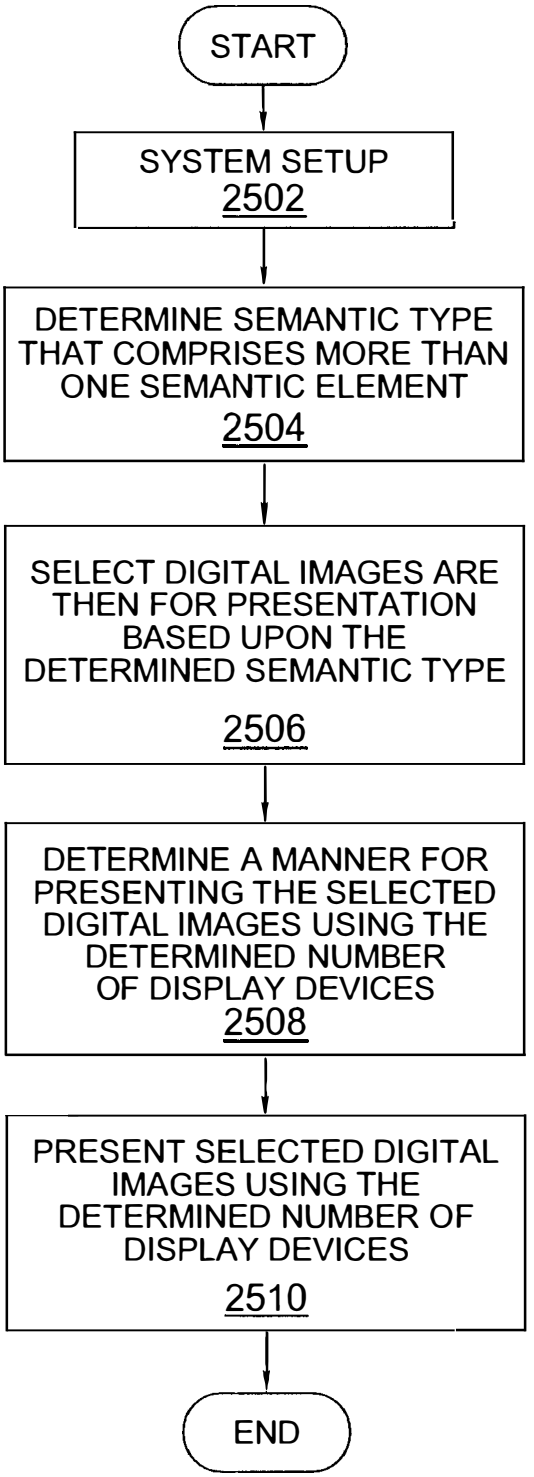
START
SYSTEM SETUP
2502
DETERMINE SEMANTIC TYPE THAT COMPRISES MORE THAN ONE SEMANTIC ELEMENT
2504
SELECT DIGITAL IMAGES ARE THEN FOR PRESENTATION BASED UPON THE DETERMINED SEMANTIC TYPE
2506
DETERMINE A MANNER FOR PRESENTING THE SELECTED DIGITAL IMAGES USING THE DETERMINED NUMBER OF DISPLAY DEVICES
2508
PRESENT SELECTED DIGITAL IMAGES USING THE DETERMINED NUMBER OF DISPLAY DEVICES
2510
END

FIG. 25

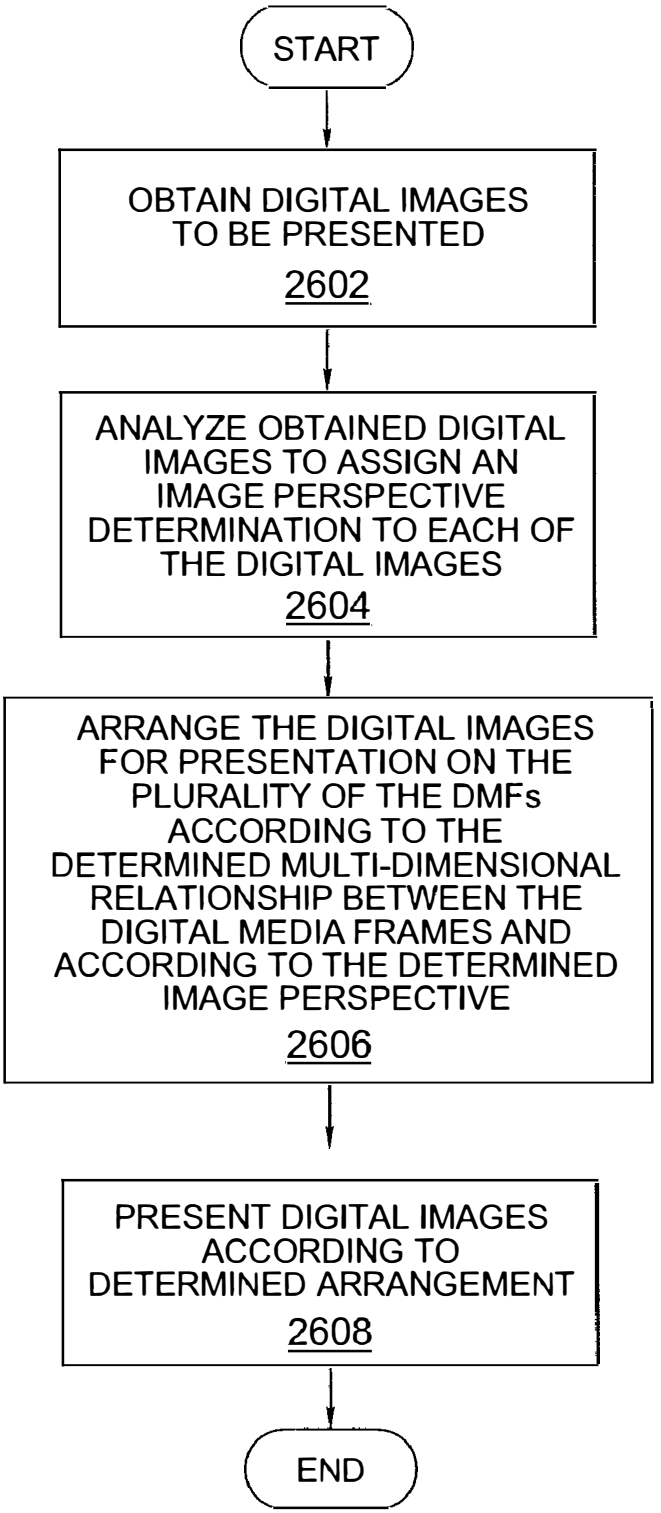
START
OBTAIN DIGITAL IMAGES TO BE PRESENTED
2602
ANALYZE OBTAINED DIGITAL IMAGES TO ASSIGN AN IMAGE PERSPECTIVE DETERMINATION TO EACH OF THE DIGITAL IMAGES
2604
ARRANGE THE DIGITAL IMAGES FOR PRESENTATION ON THE PLURALITY OF THE DMFs ACCORDING TO THE DETERMINED MULTI-DIMENSIONAL RELATIONSHIP BETWEEN THE DIGITAL MEDIA FRAMES AND ACCORDING TO THE DETERMINED IMAGE PERSPECTIVE
2606
PRESENT DIGITAL IMAGES ACCORDING TO DETERMINED ARRANGEMENT
2608
END

FIG. 26

MULTI-FRAME DISPLAY SYSTEM WITH PERSPECTIVE BASED IMAGE ARRANGEMENT

CROSS REFERENCE TO RELATED APPLICATIONS

[0001] This application is related to U.S. Ser. No. _____ (Attorney Docket 93502), entitled FUNCTION ENHANCING ARRAY FOR MULTI-FRAME DISPLAY SYSTEM, in the names of Manico et al.; and U.S. Ser. No. _____ (Attorney Docket 93499, entitled MULTI-FRAME DISPLAY SYSTEM WITH SEMANTIC IMAGE ARRANGEMENT, in the names of Telek et al. all filed concurrently herewith.

FIELD OF THE INVENTION

[0002] This invention relates to display systems and methods for controlling display systems that use more than one pixilated display to display digital images to a presentation area.

BACKGROUND OF THE INVENTION

[0003] With the usage of liquid crystal, organic light emitting diode, plasma, and the like type display screens in consumer electronic devices such as personal media players, digital photo frames, computers, cell phones, digital projectors, and TVs the flat screen television industry, the computing industry and digital camera industries have grown to a tremendous size. With millions of displays manufactured, consumers have enjoyed a substantial drop in the cost of display devices. With inexpensive display devices, clusters of these displays can be created on a wall for a wide range of purposes including but not limited to displaying personal digital pictures and video clips. These clusters can be created to be in several kinds of patterns and of differing screen sizes. The goal of many is to tile these displays in a manner that allows a single image to be presented across the displays in a relatively continuous manner.

[0004] For example, it is known to link together displays for computer monitors with two and three displays linked together and connected to a single computer for use in providing increased workspace of computer aided design and spreadsheet type applications. It is also known to link together displays to provide gaming experiences such as immersive environments. For example, in U.S. Pat. No. 7,091,926 what is suggested is to create a three dimensional immersive environment using a plurality of flat displays arranged in a concave like shape around a field of view of a user. However, here too, the general objective is to provide a display experience that is essentially the equivalent of single presented image, although provided in a manner that is intended to simulate the field of view of a person.

[0005] U.S. Pat. No. 6,570,546 describes separate displays that visually see adjacent displays via optical or electrical sensors. Yet there is no means for feed back provided to the user for each of the display locations or ability to move images from display to display.

[0006] Furthermore, multiple picture frames in various rooms of a house or multiple houses have been suggested in U.S. Pat. Nos. 7,107,605 and 6,355,228, but there is no way to interact as a user from frame to frame or manage a wall of images from any of the single frames. Thus, what is needed is a system for managing the visual content in a cluster of digital media frames in a visual field by semantic type and in an interactive way.

[0007] In addition managing multimedia content across multiple displays and display types presents new problems to the user. Multiple digital displays can be arranged in an esthetically arranged grouping can present ever changing content which can be refreshed every few seconds. These groupings of digital photo frames can be placed within the same field of view or relative locations such as affixed to a wall or placed on a mantle provide a special case in that multiple frames may be presented in an array, matrix, of decorative pattern. This practice is analogous to how framed paper photographs are presented, often in grouping that have some thematic linkage such as, photos of grandchildren, a vacation, flowers, etc.

[0008] Unlike "fixed pattern" prior art systems, the devices of the invention can be of any number and can be located in any free form pattern or position desired by the user. Since digital picture frames can receive multimedia content wirelessly, the user can modify their positions and location at any time. It is desirable for esthetic, context, and story-telling applications to present the content in a sequence, form or format that takes advantage of the consumer selected pattern of digital picture frames.

[0009] Examples include; 3 digital photo frames are placed in close proximity to one another and arrayed in a single row, a panoramic digital image could be presented across the individual frames, without user intervention. Also since the relative locations, formats such as HDTV 16/9 or TV 4/3, and resolutions are known, the panoramic image can be split properly between the frames and can be loaded in such a way as to appear to sweep across all three frames. Another example; 9 digital photo frames are affixed to a wall in relative 3 by 3 matrix and the user designates to the system that the array is to be used to present pictures and videos of her "9 grandchildren" and each individual frame is designated for a particular grandchild. As the system receives semantically tagged content, such as an image with a metadata tag of the grandchild's name, the system would automatically place the appropriate grandchild tagged media on the appropriate digital photo frame of the array of grandchildren designated digital photo frames.

[0010] Furthermore digital "transitions" used in movies and digital slide shows are designed to be viewed on a single display and indicate transitions from one digital multimedia content element to the next. They can include an almost unlimited variety of digital effects that "temporally blend" the two sequential content elements so that the first content element disappears and the second content element appears. Any directional aspect of the transition is limited to the single frame or single presentation device in which the content is being viewed. With multiple presentations devices with known relative locations there is the opportunity to use transition effects to "spatially blend" content across multiple presentation devices. This provides a more esthetic viewing experience and would provide a user with an indication as to where to focus her attention when viewing multiple display devices.

SUMMARY OF THE INVENTION

[0011] Systems and methods are provided for presenting digital images using a plurality of digital media frames separated spatially along at least two axes. In one aspect the

method comprises the steps of obtaining the digital images to be presented determining the multi-dimensional relationship between the digital media frames analyzing the digital images and any associated metadata to assign an image perspective determination to each of the digital images and determining an arrangement of the digital images for presentation on the plurality of the digital media frames according to the multi-dimensional relationship between the digital media frames and according to the determined image perspectives.

BRIEF DESCRIPTION OF THE DRAWINGS

[0012] FIG. **1** illustrates a connection between Digital Media Frame ("DMF") and external input devices;
[0013] FIG. **2** illustrates a block diagram of one embodiment of a DMF;
[0014] FIG. **3** illustrates a block diagram of another embodiment of a DMF;
[0015] FIG. **4** illustrates an exterior view of one embodiment of a DMF having a display, a processing unit, and a user input device;
[0016] FIG. **5** is a flow chart illustrating a data flow in one embodiment of a DMF;
[0017] FIG. **6** is a flow chart illustrating one embodiment a data control of a DMF;
[0018] FIG. **7** illustrates one embodiment of a network configuration involving a DMF;
[0019] FIG. **8** illustrates an embodiment of architecture of a DMF;
[0020] FIG. **9** is a flowchart illustrating an embodiment of multiple modes for displaying images;
[0021] FIG. **10** illustrates an embodiment of multiple mechanisms of accessing DMF network service;
[0022] FIG. **11** is a flowchart illustrating an embodiment of receiving data from various devices;
[0023] FIG. **12** is a flowchart illustrating an embodiment of different modes for a DMF;
[0024] FIG. **13** is a flowchart illustrating an embodiment of DMF window for implementing image data;
[0025] FIG. **14** illustrates a perspective view of a plurality of DMFs arranged on a common wall a room;
[0026] FIG. **15** illustrates a top down view of a plurality of DMFs arranged on a common wall a room;
[0027] FIG. **16** illustrates a perspective view of a plurality of DMFs arranged with two DMFs on a common wall and one DMF positioned away from the wall;
[0028] FIG. **17** illustrates a top down view of a plurality of DMFs arranged with two DMFs on a common wall and one DMF positioned away from the wall;
[0029] FIG. **18** shows a perspective view of one distribution of DMFs in a room to provide a presentation space.
[0030] FIG. **19**A is a front perspective view of a DMF array;
[0031] FIG. **19**B is a rear perspective view of a DMF array;
[0032] FIGS. **19**C and **19**D, show another embodiment of an array interaction system having a remote data signal interface;
[0033] FIG. **20** is a front view a stanchion mounted embodiment of a DMF array;
[0034] FIG. **21** is a front view of a power cable mounted embodiment of a DMF array;
[0035] FIG. **22** is a perspective view of a modular interlocking DMFs forming an array;
[0036] FIG. **23** shows a perspective view of a room having an arrangement of DFMs therein;
[0037] FIG. **24** shows a top down view of the arrangement of FIG. **23**
[0038] FIG. **25** shows a first embodiment of a method for operating the plurality of DMFs in system to present digital images.

DETAILED DESCRIPTION OF THE INVENTION

[0039] Methods and systems for using a plurality of digital media frames to display digital images are provided. The terms digital image and digital images are used broadly herein to refer to any form of data that can be used by a digital media frame as a basis for presenting a visually perceptible output. Such digital image(s) can include, but are not limited to, any form of still image, sequence of still images, stream of image information, video images, text, or graphic information or representations. Digital images can be encoded in the form of digital image data that can include still image data, video data, text data, graphic data and data representing graphical representations, raster data, mathematical formulations, data structures and/or any combination thereof. The methods and systems described and claimed herein can enable a plurality of separate digital media frames to be used to present digital images in an efficient and intuitively understandable fashion without resort to the conventional expedient of virtually combining a plurality of separate displays so that they appear to work as a single generally continuous display device.
[0040] The following sections describe the general structure, operation and use of individual digital media frames and then describes methods and systems for operating a plurality of such digital media frames.

Digital Media Frame

[0041] A digital media frame (DMF) has a display unit and control system that allows a user to display at least one digital image with minimal user intervention. The DMF is capable of receiving digital images from various external input devices, such as, digital cameras, video cameras, computers, telephone lines, television cables, and Internet servers or other types of networks and in certain embodiments the DMF optionally can be made to capture digital images. Upon obtaining digital images, the DMF can generate auxiliary information relating to each digital image and stores the digital images together with the auxiliary information in a memory. The DMF, subsequently retrieves the digital images from the memory with the auxiliary information and displays the digital images on a display.
[0042] FIG. **1** illustrates an embodiment of a connection between external devices **100** and a DMF **102**. In FIG. **1**, DMF **102** is illustrated as being connected to a camera **110**, a personal computer ("PC") **112**, a cable connector **114**, and an Internet connector **116**.
[0043] DMF **102** further contains an interface unit **104** and a user input component **105**. The user input component **105** also contains user-input buttons **106**, which are the input devices. The interface unit **104** includes at least one I/O ("input and output") port capable of connecting to the camera **110**, PC **112**, the cable connectors **114**, and the Internet connector **116** using connecting cables **120**, **122**, **124**, and **126**, respectively. The interface unit **104** is further capable of receiving and processing both digital and analog image data. It will be apparent to one of ordinary skill in the art that one or more of these external devices **100** can be connected to a

particular DMF **102**. It will also be apparent that the equivalent conventional input devices **100** can be similarly connected.

[0044] A camera **110** can be connected to interface unit **104**. Camera **110** can be a digital still camera or a digital video camera that provides captured images in digital form. Camera **110** can also be an analog video camera that provides analog image signals that can be converted by interface unit **104** or other portions of DMF **102** into a digital image. In one embodiment, the camera **110** can directly transfer the captured image to the DMF using conventional transmission media, such as, for example, wireless, cable, or removable media. In another embodiment, the camera **110** can first transfer the captured images to a computer **112** and the computer **112**, subsequently, transfers the digital images to the DMP **102**. The advantage of using a computer **112** as a forwarding station between the camera **110** and the DMF **102** is to perform some functions where the DMF **102** is not particularly well suited to perform which can include some types of data conversions.

[0045] The computer **112**, which may be a PC, a workstation, a mini-computer, or a mainframe computer, or a processor based system, receives digital or analog images from other devices, such as, scanners, Internet servers, or cameras **110**. Upon receipt of the images, the computer **112** may perform some functions before the computer **112** passes the images to the DMF **102**. The function may involve reordering the sequence of the images to be displayed, or converting one type of image to another type of digital image such as converting an**1** analog image to a digital image, and so on.

[0046] The cable connectors **114** include television and telephone lines. The lines could be optical, metal, or cordless media. In one embodiment, the interface unit **104** is capable of receiving the digital images directly from the cable connectors **114**. In another embodiment, the interface unit **104** receives the digital images from a forwarding station, such as a computer **112**, where the cable connectors **114** are connected to the computer **112**.

[0047] The Internet connector **116** is another external device **100** that enables the DMF **102** to receive digital images directly from an Internet node. In one embodiment, the DMF **102** is configured to be able to read ("HyperText Markup Language") HTML and to interface with Transmission Control Protocol ("TCP")/Internet protocol ("IP"). It should be noted that the connecting cables, **120**, **122**, **124**, and **126** can use conventional optical, electrical, or wireless data communication technology.

[0048] FIG. **2** illustrates a block diagram of one embodiment of a digital media frame **200**. In the illustrated embodiment, digital media frame **120** has an interface circuit **204**, a processing circuit **206**, memory **208**, a display controller **210** and a display device **212**, a user input system **214** and optional sensors **216**.

[0049] Interface circuit **204** enables digital media frame **20** to receive input data from external devices **202** and can optionally be used to send data to external devices **202**. External devices **202** can comprise but are not limited to digital still cameras, digital video cameras, scanners, computers, local servers, remote servers, memory devices, the internet, printers, internet appliances, a remote control (as will be described in greater detail below), personal digital assistants, personal video players, telephones, telecommunication networks, cellular telephones, analog televisions or digital televisions or television signal distribution systems such as cable, satellite or other television systems and/or television storage systems such as recorders or players of television systems such as solid state, optical, or magnetic television signal recording and/or playback systems. As will be discussed in greater detail below, interface unit **204** can also be adapted to communicate with one or more other types of external devices including other DMFs and/or a remote control.

[0050] Interface circuit **204** can take many known forms. Where interface circuit **204** is connected to an external device **202** that provides data signals that are already in proper form for use by DMF **102**, interface circuit **204** can simply provide appropriate structures to receive and make use of the properly formatted digital data. Interface circuit **204** can also be adapted to enable exchange data with a connected external device **202** using optical signals, radio frequency signals or other forms of signals that are specially adapted for data exchange using particular wireless or wired communication systems or standards. In this regard, interface circuit **204** can provide optical, radio frequency or other receiving and optionally transmitting circuits appropriate to enable such an exchange of data and interface circuit **204** can be adapted for communication with external devices **202** using a direct electrical or optical path and can comprise, for example, a serial or parallel port, or a networked interface to a computer network or the Internet.

[0051] Further, interface circuit **204** can also have appropriate circuitry to further convert any digital data from a received format into a format that can be used by DMF **102**. Alternatively, interface circuit **204** can be adapted to receive a signal from one of external devices **202**, to identify the type of protocol or data format being used to encode the signal and to determine whether a conversion of signal type or encodement is required. The need for a conversion of received data is determined if DMF **102** is unable to make use of the data contained in a received signal in the form that the signal is received in. In this latter embodiment, interface circuit **204** can provide signals to processing circuit **206** enabling control circuit to can perform an appropriate conversion of the data into a data format that can be used by DMF **102**.

[0052] Processing circuit **206** controls the operation the DMF **102**. Processing circuit **206** causes interface circuit **204**, local memory **208**, a display controller **210** and a display device **212** to display images in response to signals received from interface circuit **204**, a user input system **214**, and/or optional sensors **216** and audio system **218**. Processing circuit **206** can comprise a microprocessor such as a programmable general purpose microprocessor, a dedicated micro-processor or micro-controller, or any other system that can be used to control operation of DMF **102**.

[0053] Among other things, processing circuit **206** is adapted to analyze data received from interface circuit **204** to determine whether the data comprises instructions, a digital image or other data and to determine appropriate steps for processing such data. Processing circuit **206** can be adapted to edit, compress, modify or otherwise process and in this regard can be programmed for such use or can incorporate specific circuits such as signal processing circuits for this purpose.

[0054] A digital image can be associated with metadata. Such metadata generally comprises any form of data that is associated with the digital image but that is not necessarily presented as a part of the visually perceptible output. For example, such metadata can include but is not necessarily limited to data reflecting a time and/or date upon which the visual content used to form the digital image was captured or

generated, a location of such capture or generation, conditions of capture or generation, the identification of a capture or generation device, an identification of a photographer, creator or editor of the visual content used to form the visual content data record, information characterizing the nature of the visual content, information that can be used in determining parameters for presenting the visual content depicted in the visual content data record, audio data or text data for presentation with the visual content data record, and/or keywords and or other indexing information.

[0055] Where processing circuit **206** determines that data received from interface circuit **204** comprises a digital image, processing circuit **206** can determine a location in memory **26** for the storage of the digital image so that, as required, processing circuit **206** can recall this digital image. Processing circuit **206** can also generate and/or store auxiliary information for each digital image. Such auxiliary information can include a color assignment. The color assignment maps out image color distribution from an available color grid according to the color distribution of the image data. The auxiliary information can also include date and time that the digital image was received by DMF **102**, an Internet address that indicates which Internet node was used for sending the digital image to the DMF **102** or other source identifier information. The auxiliary information can also include Internet address links to other web sites that are related to the image. For example, if an image describes a child, the linked web sites that describe child's family or that are known to or that are likely to contain visual content data records related to the family or child such as web sites of other family members, schools, churches etc associated with the family or child. Image orientations, transitions, or other presentation related information determined by DMF **102** can also be stored as auxiliary information with the digital image by processing circuit **206**.

[0056] In one embodiment, the auxiliary information can also comprise audio information including both edited versions of audio information provided in metadata or otherwise associated with the received visual content data file and audio information created or associated with the visual content data file after receipt of the visual content data file by DMF **102**. Such audio information can be stored in memory **208** or elsewhere. Where stored elsewhere, location information is stored with the digital image indicating the location at which the audio information can be obtained. Optionally, DMF **102** can incorporate an audio circuit **118** that can be adapted to generate audible signals based upon such audio information and/or that can receive audible signals and convert these audible signals into digital audio information that can be stored.

[0057] Processing circuit **206** can receive control signals from external devices **202** by way of signals received at interface circuit **204** or from a user input system **114**. Processing circuit **206** cooperates with user input system **214** to allow DMF **20** to directly to interact with a user. User input system **214** can comprise any form of transducer or other device capable of receiving an input from a user and converting this input into a signal that can be used by processing circuit **206** in operating DMF **102**. For example, user input system **214** can comprise a push button, dial, rotatable controller, a touch screen input, a touch pad input, a 4-way switch, a 6-way switch, an 8-way switch, a stylus system, a trackball system, a joystick system, a voice recognition system, a gesture recognition system or other such systems.

[0058] User input system **214** can be in whole or in part fixedly incorporated into DMF **102** and alternatively some or all of the portions of user input system **34** can be separable from DMF **102** so as to provide a remote control (as will be described in greater detail below.)

[0059] User input system **214** can include an activation button that sends a trigger signal to processing circuit **206** indicating a desire to present visual content as well as other controls useful in the operation of DMF **102**. For example, user input system **214** can be adapted to allow one or more people to enter system adjustment preferences such as hue, contrast, brightness, audio volume, content channel selections etc. In one embodiment, user input system **214** gives a user certain controls to guide processing circuit **206** in making decisions as to how to manage the presentation of images on DMF **102**. Processing circuit **206** receives signals from user input system **36** that characterize the user input actions made by the user and interprets the signals in a manner that is intended to cause DMF **102** to operate in a manner consistent with the requested user input action. For example, where a user has made a user input action that is intended to indicate how images should be displayed, user input system **214** generates a user input signal that is received by processing circuit **206** and that is used by processing circuit **206** in determining how to display images.

[0060] Memory **208** is provided to allow processor **34** (or set of memory blocks) which may include, for example, one or more of the following: dynamic random access memory ("DRAM"), static random access memory ("SRAM"), read-only memory, ("ROM"), non-volatile memory, magnetic disk storage, magnetic tape storage, CD-ROM, DVD-ROM, and so on. In one embodiment, processor **206** controls the access to data stored in memory **208**. It should be noted that memory **208** can also receive data from other circuits and systems, such as from interface circuit **204** and/or display controller **210**.

[0061] Display controller **210** is capable of controlling display device **212**. Display device **212** can comprise any known device for providing an image modulated light and can include but is not limited to, a liquid crystal display ("LCD"), a cathode-ray tube ("CRT"), a plasma display, an electroluminescent display, an Organic Light Emitting Diode display, a scanned laser display or a silicon-based display. In the embodiment illustrated, processing circuit **206** provides a digital image to display controller **210** or converts relevant portions of a digital image into form that is then transmitted to display controller **210** which, in turn, converts such received digital image into display codes that are in a format that causes display device **210**. In this regard, display device **214** can comprise an analog television, a digital television, computer monitor, projection system or other apparatus capable of receiving signals containing images or other visual content and converting the signals into such image modulated light.

[0062] To facilitate this, display controller **210** can also contain a memory to store the display codes. After conversion, display controller **210** transfers the display codes along with display controls to display device **212**. It should be noted that display controller **210** can also receive input signals from other sources, such as user input system **214** or sensors **216**.

[0063] Sensors **216** are optional and can comprise any form of circuit or system that can generate an output that reflects an environmental condition within or outside of DMF **102**. Typically, such a sensor will comprise some form of transducer that generates or modulates an electrical or optical signal in

response to a particular environmental condition. Examples of such sensors include but are not limited to any conventionally known pressure sensor, proximity sensor, distance sensor, single or multi-spot rangefinder, temperature sensors, infra-red sensors, contact sensors and the like.

[0064] Audio system **218** is likewise optional and can include any known system for converting digital audio signals provided by processing circuit **206** or memory **208** into an audible signal.

[0065] Moreover, there is a power block (not shown in the figure) that can include either or both of an AC power supply and/or a DC power supply. In one embodiment, the DC battery backup power supply is employed for preventing memory loss upon AC power supply disconnection. Such an AC power supply can, for example, obtain power from line currents through a direct electrical connection or an inductive connection therewith and convert such power into a form that is useful in operating DMF **20**. Such a DC power supply can comprise a fuel cell or a battery which can be recharged using converted AC power, or other forms of power such as photovoltaic cell (not shown) which can be integrated into DMF **102**. The processing circuit **206** can optionally be used to manage a low power management circuit to conserve power consumption upon disconnection of AC power supply and/or to manage recharging of batteries during connection to an AC power supply.

[0066] FIG. **3** illustrates a detailed architecture of one embodiment of a DMF **300** with an interface block **301**, a processing block **310** and a displaying block **340**. In this embodiment, interface block **301** receives signals from external devices (not shown) or captures image, video or audio signals and in turn provides signals to processing unit **320** based upon such signals. Processing block **310** receives digital images from interface block **301** and causes the received digital images to be presented by displaying block **340** based upon the signals received from interface block **301** or takes such other action as may be indicated by the received signals from interface block **301** or by signals received from a user input unit **322**.

[0067] In this embodiment, interface block **301** is illustrated as having an analog input circuit **302**, a digital input circuit **304**, and wireless input circuit **305**. The analog input circuit **302** is optional and can comprise, for example, an analog input device, such as an analog video camera or sound source or a connector that allows DMF **300** to be connected to such an analog video camera or sound source. Analog input circuit **302** can optionally provide any appropriate impedance matching and buffering circuits. Analog input unit **302** transfers the analog image data to an analog module **312** and can include for example, an analog receiver circuit (not shown) and a synchronizing circuit (not shown). In such an embodiment, analog receiver circuit receives analog signal from analog input circuit **302** and the synchronizing circuit performs analog to digital conversion and subsequently synchronizes the converted image data, audio data or other data representing the signal received at the analog input to generate image data. After the data is received and synchronized, analog module **312** drives the digital image data, audio data or other data on an internal bus **318**.

[0068] Digital input unit **304** can be a digital input device, such as a digital still camera, digital video camera or digital audio signal source, or it can be a connector that allows such devices to be connected to DMF **102** for the exchange of data therewith. Digital input unit **304** is capable of generating digital images according to data received at digital input unit **304** that represents captured images, video, audio or other information. Digital input unit **304** is further capable of generating instruction data or other data from digital inputs received at input **304**. After properly generating the digital image data or instruction data, the digital input unit **304** transfers the digital data to processing circuit **206** or to a memory system **336** directly or by way of internal bus **318**.

[0069] In one embodiment, a digital module **314** includes a digital receiver circuit and a translation circuit (not shown in the figure). In one embodiment, the digital receiver circuit may include a universal serial bus ("USB") port for receiving digital data from the interface block **314**. Upon receipt of the digital data, the translation circuit determines whether a translation of the data is needed. A translation is required if the data format of the input data is a foreign data format. The foreign data format is a type of data format or protocol that the DMF **300** is unable to implement. In one embodiment, the DMF **300** has multiple native data formats, and is also capable of recognizing multiple foreign data formats. Consequently, the foreign data format of the image data must be converted to a native data format before the image data can be implemented for display. After the image data is properly received and translated, the digital module **314** drives the received digital data on internal bus **318**.

[0070] Another example embodiment of such digital input **304** is one that is adapted to enable communication using hardware and protocols that are consistent with the EIA/TIA-232-E standard entitled "Interface Between Data Terminal Equipment and Data Circuit-Termination Equipment Employing Serial Binary Data Interchange" prepared by the Electronic Industry Association and the Telecommunications Industry Association. Other example embodiments of a communication circuit of this type include circuits and systems that conform with the standards set for the universal serial bus standard, and the IEEE 1394 (so-called "Firewire") standard. Digital input **304** can also comprise circuits and systems that comply with other standards or that comply with proprietary standards.

[0071] Wireless input circuit **305** comprises circuits and systems that enable DMF **20** to communicate with external devices **40** using wireless communication protocols. For example, wireless input circuit **305** can cooperate with wireless module **315** to provide circuits and systems that communicate in ways that that conform to wireless communication standards such as the so-called "Wi-Fi" standards established and described at Institute of Electrical and Electronic Engineers standards 802.11a, 802.11b, 102.11 g and 802.11 n, the so-called "Bluetooth" wireless standard including Version 1.2, adopted November, 2003 by the Bluetooth Special Interest Group, Bellevue, Wash., U.SA, or Version 2.0+Enhanced Data Rate (EDR), adopted November, 2004 by the same or any other such wireless communication standard developed by the Institute of Electrical and Electronic Engineers, the Bluetooth SIG or others in this field.

[0072] In another example, wireless communication circuit **305** and wireless module **315** can be adapted to communicate by converting digital data into infrared optical signals or to convert infrared optical signals into digital data using infrared technology that performs such conversions in accordance with protocols established by the Infrared Data Association (IrDA). Such protocols include, but are not limited to the Serial Infrared Protocol (SIR) and other protocols developed by the IrDA.

[0073] As is shown in the embodiment of FIG. **3**, memory **326** can take any of a variety of forms, and in this embodiment comprises a DRAM **330**, non-volatile memory **332**, Read Only Memory **334**, and removable memory interface **336** that is adapted to receive a removable memory such as an optical disk medium, a flash memory card or a jump drive.

[0074] As is further illustrated in FIG. **3**, internal bus **318** is used to interconnect analog module **312** digital module **313**, wireless module **315**, user input system **36**, processing circuit **206**, memory **326**, and display controller **342**.

[0075] As discussed in greater detail above processing circuit **206** generally controls the operation of DMF **300** which can involve to performing functions including image size scaling, color space conversion, image filtering, image decoding, image data compression/decompression, and so on. In one embodiment, processing unit **320** is used to control the internal bus **318**, such as issuing bus busy and bus grant signals. Processing unit **320** can be further configured to control access to memory **326** by controlling a memory control bus **336**, which carries various control signals. In another embodiment, processing unit **320** can control access to memory **326** using internal bus **318** for issuing control signals, such as bus grant and bus busy signals.

[0076] It should be noted that other types of bus connections and bus controls are possible. For example, in one embodiment, processing unit **320** can control the internal bus **318** and control bus **336**. While the control bus **336** is used for control signals, the internal bus **318** is used for data. It should be noted that the internal bus **318** and the control bus **336** can be merged into one single bus. In another embodiment, the internal bus **318** contains a conventional bus controller (not shown) to control the bus access.

[0077] Processing circuit **206** is configured to determine a manner for presenting images, a sequence of sequence of images, video streams and other visual content on display unit **350**. This can involve, for example, determining time intervals for presenting the visual content, time transition types between images. The interval transition time indicates the time interval between the current image and the next image to be displayed. The image transition is a mechanism of retiring the presentation of a current image while phasing in the next image. In one embodiment, the image transition moves current and next images in one direction as the current image move out while the next image moves.

[0078] In another embodiment, processing circuit **320** can map out image colors from available color grid according to color attributions of the visual content data record. In this embodiment, processing circuit **320** further generates auxiliary information for each image, where the auxiliary information may contains a color assignment, date and time of the image data generated and received, Internet addresses, audio information, image orientations, and so on.

[0079] User input unit **322** can incorporate any known input device that can convert an user input action into a signal that is indicative of the user input action taken and that can be used by processing unit **320**. User input unit **332** can incorporate devices such as a push button switch, a touch screen input device, remote control device, or a sound activated input device (speech recognition input-output device), and so on. In one embodiment, the user-input unit **322** provides display controls to users, such as a fast forward, a reverse, and pause functions. The fast forward function allows a user to view the next image, while the reverse function allows a user to view the previous image.

[0080] Sensors **324** are optional and can comprise any form of circuit or system that can generate an output that reflects an environmental condition within or outside of DMF **102**. Typically, such a sensor will comprise some form of transducer that generates or modulates an electrical or optical signal in response to a particular environmental condition. Examples of such sensors include but are not limited to any conventionally known light sensor, pressure sensor, proximity sensor, distance sensor, single or multi-spot rangefinder, temperature sensors, infra-red sensors, contact sensors and the like. Signals from sensors **324** can be used as an input to processing unit **320** from which processing unit **320** can make determinations about when, where, and how to present images. For example signals from a light sensor can be used to determine image intensity and contrast characteristics, while signals from a range finder can be used to determine whether any person is present to view a presentation of images, and also to determine the relative location of such a person with respect to the DMF which, in turn can influence selections of digital images, font sizes, line thicknesses, and the like.

[0081] In yet another embodiment, processing circuit **320** is capable of receiving, from an external device **100**, instruction data identifying a predetermined sequence for displaying digital images and where such instructions are received, processing circuit **320** can present the digital images in the in the predetermined sequence. Moreover, a sequence of digital images to be displayed may be altered by control signals from a user, such as a pause signal from the user-input unit **332**.

[0082] In one embodiment, the sequence of the images to be displayed is a function of where the image data is to be stored in the memory. In this embodiment, the image display block **340** fetches the next image data from a predefined physical memory location. In another embodiment, a sequence of the images to be displayed can be reordered by processing circuit **206**. In yet another embodiment, the sequence can be further altered by a user using the user-input unit **332**.

[0083] In yet another embodiment, processing circuit **320** is capable of receiving, from an external device **100**, instruction data identifying a predetermined sequence for displaying digital images and where such instructions are received, processing circuit **320** can present the digital images in the in the predetermined sequence. Moreover, a sequence of digital images to be displayed may be altered by control signals from a user, such as a pause signal from the user-input unit **332**.

[0084] In one embodiment, the sequence of the images to be displayed is a function of where the image data is to be stored in the memory. In this embodiment, the image display block **340** fetches the next image data from a predefined physical memory location. In another embodiment, a sequence of the images to be displayed can be reordered by processing circuit **206**. In yet another embodiment, the sequence can be further altered by a user using the user-input unit **332**.

[0085] When the digital images to be presented are properly identified and ordered, processing circuit **320** drives the digital images together with any associated metadata or any auxiliary information on internal bus **318** to image display block **340**. In one embodiment, processing circuit **320** uses a private bus (not shown in the figure) between processing circuit **320** and display controller **342** for transferring a digital image out of memory **326** for use in generating a display image. Upon receipt of the visual content data record, display controller **342** prepares images for display based upon the

digital image and optionally, the auxiliary information and causes the images to be sent to image display block **340**.

[0086] Image display block **340** contains display controller **342**, display unit **350**, an optional display memory buffer **344** and an optional audio circuit **370**. In one embodiment, the display unit **350** is a LCD. However, display unit **350** can take any other known form of device that is capable of providing image modulated light. After receiving the image data, display controller **342** generates an image display code in response to the image data. Optionally the selected display code can also be based at least in part upon the metadata or auxiliary information associated with the digital image that is the source of the image data. Display unit **350**, subsequently, receives display codes for images from the display controller **342** and displays the image. In one embodiment, the display controller **342** stores a set of display codes in memory buffer **344**. In another embodiment, display controller **342** stores the display code in the non-volatile memory **332** or DRAM **330**.

[0087] Audio system **352** is likewise optional and can include any known system for converting digital audio signals provided by processing unit **320** or memory **326** into an audible signal.

[0088] It should be noted that the display controller **342** could be integrated into the display device **30** or be integrated into processing circuit **206**. Also, it will be appreciated that any of the components of DMF **300** can be integrated into a single integrated circuit ("IC") or otherwise provided on an integral platform.

[0089] Referring to FIG. **4**, an exterior view of one embodiment of a DMF **400** is illustrated. As shown in FIG. **4**, DMF **400** has an exterior surface **401** with openings that and that allow image modulated light from display unit **402** to exit from exterior surface **401** and that allow access to user input system **410**, which in this embodiment provides a reverse button **420**, a pause button **422**, and a fast forward button **424**. Reverse button **420** allows a user to view previously displayed images, while the fast forward button **424** allows a user to view next sequential images. Pause button **422** causes a currently displaying image to freeze until a release command is issued by a subsequent activation of the pause button **422**. In another embodiment, the user-input system **410** may be merged with the display unit **402**, where inputs can be made through a conventional touch screen input device. In yet another embodiment, the inputs can be made through a conventional voice activated input device, such as a speech recognition input/output device. In yet another embodiment, the inputs come from a computer using conventional port connections.

[0090] FIG. **5** is a flow chart illustrating a data flow within the DMF **400**. A process of image displaying starts at block **501**. The process proceeds to block **502**, where an interface unit of the DMF **400** receives the digital images for presentation on the DMF and any instructions for presenting the digital images such as a predetermined sequence of images. As noted above, the image data may be captured by image capturing devices, such as a digital or video camera. Upon receipt of the digital images, the interface unit **301** identifies whether the digital images have image data that is in a digital data format or in an analog data format. If the image data is in the analog data format, the interface unit will convert the analog data format to a digital data format. If the image data is in the digital data format, no conversion from analog to digital ("A/D") is needed.

[0091] After block **502**, the process proceeds to block **504**, where the digital images are sorted in a predefined sequence or a special ordered sequence of images. The determination of a presentation sequence can be made in a variety of ways, in particular, the digital images can be stored in a first in first out buffer from which digital images are drawn and presented in a sequential manner in order of receipt. In another approach, digital images are received with data that identifies a preferred sequence for presenting the digital images. In still another approach, the digital images can be associated with a timing signal that can be used to determine timing for presenting the images. The timing signal can comprise for example, a simple clock signal or a continuous stream of video or audio information that will be presented during the presentation of the digital images. The digital images are associated with the timing signal such that they will be presented at particular times relative to the continuous presentation of video or audio information. In this approach, the sequence of digital images follows the timing signal. Other approaches can be used as will be described in greater detail below.

[0092] Before moving on to the next block, the process determines whether a translation is required. A translation is needed if the DMF **400** identifies that the data format of the image data is a foreign data format. Consequently, the foreign data format must be translated into a DMF native data format before the image data can be further processed. After the image data is properly sorted and translated, the process proceeds to the next block.

[0093] The process moves from block **504** to block **506**, where the image data is stored in the memory. In one embodiment, the location of the image data stored determines the sequence of the images to be displayed. After block **506**, the process proceeds to block **508**, where the image data is converted to display codes. In one embodiment, block **508** determines the interval transition time and the various types of image transitions. The interval transition time indicates the time interval between the current image and the next image to be displayed. The image transition is a mechanism of retiring current images from the display while phasing in the next image. In one embodiment, the image transition moves current and next images in one direction as the current image moves out while the next image moves in. In another embodiment, the image transition fades out the current image while fading in the next image. After block **508**, the process proceeds to block **510**, where images are displayed according the image data together with the auxiliary information. The process ends at block **512**.

[0094] FIG. **6** is a flow chart illustrating an embodiment of a controlled data flow of DMF **600**. A process of image display starts at block **602**. The process moves from block **602** to block **604**, where an interface unit of the DMF receives the image data representing digital images to be presented, which may be captured by image capturing devices, such as digital or video cameras. Upon receipt of the image data, the process proceeds to block **606**, where the process identifies whether the image data is in analog or digital data format. If the image data is in analog data format, the process proceeds from block **606** to block **608**. At block **608**, the process converts the analog data format into digital data format. After conversion, the process proceeds from the block **608** to block **614**, where the image data is stored.

[0095] If the image data is not in analog data format, which indicates that the image data is in digital data format, the

process proceeds from block **606** to block **610**. At block **610**, the process identifies whether the digital image data needs to be translated into a DMF recognizable digital data format. If the digital data format of the image data is recognizable, the process proceeds from block **610** to block **614**.

[0096] If the image data is a foreign data format, the process moves from block **610** to block **612**, where a translation is performed. At block **612**, the foreign data format of input image data is translated into a DMF native data format. In one embodiment, the DMF may have several native data formats, which will reduce the frequency of translation. In another embodiment, the DMF is capable of identifying multiple foreign data formats. After translation, the process proceeds from block **612** to block **614**, where the image data is stored.

[0097] In one embodiment, the image data is stored in a non-volatile memory device, such as a flash memory, for preventing data loss upon disconnection of power supply. In another embodiment, portable battery power supply is used to prevent data loss upon disconnection of power supply. In yet another embodiment, the image data is stored in a magnetic storage, such as a magnetic disk storage or a magnetic tape storage, for preventing memory loss. After block **614**, the process moves to block **618**, where the auxiliary data is attached to each image.

[0098] At block **618**, the process aligns images and attaches the auxiliary information to each image. In one embodiment, the alignment of images can be sequential according to the order of the memory location that the image data stored. In another embodiment, the alignment of images is predefined. The auxiliary information contains the information of a color assignment, a date and time of the image generated, information of Internet addresses, audio, image orientations, and so on.

[0099] After attaching the auxiliary information, the process proceeds from block **618** to block **616**, where the image data together with the attached auxiliary information are stored in a memory buffer. The memory buffer is a small and fast memory device that provides fast memory access for displaying images. In one embodiment, the memory buffer is non-volatile memory device to prevent memory loss upon power disconnection. In another embodiment, the memory buffer is regular random access memory having a backup portable power supply to prevent memory loss. After block **616**, the process moves to block **620**, where the output from the memory buffer can be selected for displaying.

[0100] At block **620**, the process further receives signals from block **624** and block **622**. The block **624** contains input control signals from the user, while the block **622** contains the image data for the last displayed images. The process at block **624** receives a user input, which may indicate to pause the current image. In another embodiment, the user input is used as one of many combinational logic inputs for selecting the next image.

[0101] Upon selecting the image data, the process proceeds from block **620** to block **630**, where the image is displayed. When the current image is displayed, the process proceeds from block **630** to block **622**, where the current image is stored. In one embodiment, block **622** stores the image data only for one image, which is the last displayed image. In another embodiment, block **622** stores the image data for a set of recently displayed images.

[0102] In one embodiment, DMF has a pictorial mode and an information mode. While the pictorial mode of DMF displays a sequence of predefined pictures, the information mode of DMP displays a set of information or data, such as news, financial data, advertising, and the like. A third mode, of a combination of pictorial and informational modes may be formed where the DMF dedicates a portion of the screen to pictorial display while another portion of the screen is apportioned to informational display. It should be noted that other types of display modes may be existed, but they are not important to understand the invention.

[0103] As discussed previously, DMF is capable of sending and receiving information over a network, such as the Internet. Various categories of information that are available over the Internet are also available to DMF. Accordingly, DMF, in one embodiment, can display several categories of information when it is in the information mode. For example, such categories can include news, sports, entertainment, financial data, et cetera. However, in order to display multiple categories of information in the information mode, DMF has to be set up or configured to handle multiple sets of information. In one embodiment, the information mode of DMF is configured through a DMF server, as will be described in more detail below.

[0104] FIG. **7** illustrates one embodiment of a network configuration **700**. Configuration **700** contains a DMF **701**, a PC **712**, a PC **708**, a DMF **714**, an entity **716**, a DMF server **720**, and the Internet **718**. Various conventional connecting cables, such as, cables **730-738**, are used to provide device communications through the Internet **718**. DMF **701** further contains a display **702**, a base **704**, and a network-communicating device **710**. Display **702** and base **704** are connected using a connecting device **703**. In one embodiment, connecting device **703** is a cable. In another embodiment, connecting device **703** is a conventional cordless connecting device. Moreover, base **704** contains an interface circuit **706**, which is used to receive and to send information to other devices.

[0105] Network-communicating device **710** may be a modem or a cordless modem, such as a cellular modem. In one embodiment, network-communicating device **710** is a one-way transmitting device, such as a pager type of one-way communication device. In another embodiment, network-communicating device **710** is a two-way communicating device, which may facilitate an interactive communication between devices. In one embodiment, DMF **701** uses a cellular modem to communicate with PC **712**, DMF **714**, and entity **716** or DMF server **720**.

[0106] PC **712** is, for example, a personal computer and it can communicate with DMF **701** via the Internet **718**. DMF **714** is another digital media frame that is capable of communicating directly to DMF **701** via the Internet **718**. For instance, DMF **714** may use the Internet **718** as a network vehicle to deliver a set of images to DMF **701**. Moreover, entity **716** can be a corporation or a group of devices, which may include multiple DMFs and PCs. In one embodiment, DMF **701** is capable of accessing to any device that is connected to the network.

[0107] DMF server **720** is a network server that provides DMF network service for DMF devices connected to the network. It will be appreciated from the use of the Internet **718** to provide networking between the devices, that the system of FIG. **7** can be implemented using telecommunication, closed, private, or proprietary networking solutions to interconnect the devices.

[0108] In one embodiment, DMF server includes a system **722** and a user profile database **724**. DMF network service provides user and data services, which can be used to config-

ure DMF. In one embodiment, the DMF network service supplies a DMF web page, which allows users to configure or receive the DMF network services. In this embodiment, the DMF web page lists multiple categories of images the user can subscribe to. Alternatively, the DMF web page may list multiple commercially available web sites and a user can select listed web sites to view his or her DMF. Commercially available web sites may include, but are not limited to, stock market news, sports, and weather channels. After the user selected the listed categories or web sties, the DMF network service creates a user profile and stores the selected categories or web sites in the user profile. The user profile can also be used to characterize the content collection by use of significant dates for various events the life of the family as well as outlining the relationships among family members, assigning names to faces for face recognition, places to GPS information, etc. The user profile can later be used as a default configuration for the corresponding DMF.

[0109] The DMF network service, in one embodiment, is responsible to maintain the user profile database **724**. In this embodiment, the user profile database **724** is resided on DMF server **720**. It should be noted that the user profile database **724** could be located on any other network server as long as the DMF network service can access the network serve through the network. The user profile database **724** can be modified either using DMF **710**, PC **712**, or other devices, which can directly access the DMF server web site. A user can also call a DMF network service provider to verbally convey to a DMF network service representative a new user DMF configuration. More detailed description about accessing the DMF network service will be described later.

[0110] Other methods of configuring DMF are possible. For example, DMF **701** could be configured by PC **708** or PC **712**. Also, DMF **701** may contain configuration software, which allows DMF **701** to configure itself. It should be noted that other methods for configuring DMF **701** are possible, but they are not necessary to understanding the invention.

[0111] FIG. **8** illustrates an embodiment of a DMF architecture **800**. DMF **802** includes an information mode **804** and a picture mode **850**. Information mode **804** displays informational data, such as stock trading news. Picture mode **850** displays a sequence of pictorial images that are previously received and stored in the memory.

[0112] Information mode **804** further contains a graphical representation portion **806** and a textural representation portion **808**. Graphical representation portion **806** displays pictorial images while textual representation portion **808** displays text or letters. Graphical representation portion **806** can be further split into photos portion **810** and video portion **812**. The photo portion **810** includes still pictorial images and video portion **812** contains motion images. Photo portion **810** can be further divided into private block **814** and public block **816**. Private block **814** refers to individual photos, for example, an individual creates a photograph for private use.

[0113] Video block **812** can be also divided into a news portion **818** and an advertisement portion **820**. News portion **818** refers to a motion picture, such as, a section of videotape from a news reporter. Advertisement portion **820** refers to marketing, which may be an interactive commercial advertisement.

[0114] Textural representation portion **808** contains an advertisement portion **822** and an information portion **830**. While advertisement portion **822** refers to commercial marketing, information portion **830** denotes useful information, such as weather and stock trading news. Advertisement portion **822** is further divided into a standard section **824** and an interactive section **826**. Standard section **824** refers to commercial messages using words and text. Interactive section **826** refers to commercial messages using text interactively, such as an on-line gambling.

[0115] Information portion **830** further contains a stock section **832**, a news section **834**, and a shopping section **836**. In one embodiment, stock section **832** refers to stock trading news using text and shopping section **836** refers to on-line shopping using textural representations. News section **834** can be further split into weather channel **838** and news summary channel or headline news **840**. Weather channel **838** refers to weather report using text while news summary channel **840** summarizes news. It should be appreciated that any portion of information frame **804** and picture frame **850** can be overlaid to produce a frame that appears as a combination of information and pictures. It should be noted that other categories or portions are possible, but they are not necessary to understanding the present invention.

[0116] FIG. **9** is a flowchart **900** illustrating an embodiment of multiple modes for displaying images. Block **902** shows a step of setting the display sequence to data mode. At block **904**, the process determines whether the picture signal is active. If the picture signal is active, which indicates that the picture mode should be set, the picture mode is set at block **906**. At block **908**, the process displays images according to the display modes. After block **908**, the process ends.

[0117] FIG. **10** illustrates an embodiment of a mechanism **1000** showing multiple schemes to access the DMF network service. Mechanism **1000** includes a PC **1050**, a DMF **1052**, a telephone **1054**, a server **1060**, a server **1062**, and a DMF network server ("DNS") **1059** and all devices are interconnected via the Internet **1056**. DNS **1059** supports DMF network service **1058**, which provides data implementation. In one embodiment, DMF network service **1058** contains a user profile database, which may be physically located at DNS **1059**, server **1060**, or server **1062**. To access user profiles, a user may use a PC, **1050**, a DMF **1052** or a telephone **1054** to access the user profile through DMF network service **1058**.

[0118] In one embodiment, a user may use the telephone **1054** to initiate DMF network service **1058**. Once DMF network service **1058** is initiated, it allows the user to use the services, such as reconfiguration of DMF. For example, when DMF **1052** needs to be reconfigured, DMF network services **1058** supplies a DMF web page and allows a user to select options from the DMF web page to configure DMF **1052**. It should be noted that communication between DMF **1052** and DMF network service **1058** is carried out through the Internet **1056**.

[0119] In another embodiment, a request for DMF network service **1058** from DMF **1052** can be initiated via a direct connection. A direct connection is a cable or a modem that is directly connected between DNS **1059** and DMF **1052**. The Internet **1056** can be an alternative connection between DNS **1059** and DMF **1052**.

[0120] PC **1050** can also be used to request DMF network service **1058** for DMF **1052**. In one embodiment, DMF network service **1058** provides services directly to DMF **1052** after it receives the request. In another embodiment, DMF network service **1058** provides services to DMF **1052** through PC **1050**. It should be noted that other methods of requesting DMF network service **1058** are possible, but they are not necessary to understanding the present invention.

[0121] FIG. **11** is a flowchart **1100** illustrating an embodiment of receiving data from various devices. The process begins at the start block and proceeds to block **1002** where the process receives data. At block **1004**, the process examines whether the data comes from a camera. If block **1004** is false, the process proceeds to block **1008**. However, if the block **1004** is true, which indicates that the data comes from the camera, the process receives the data using camera interface program at block **1006**. Camera interface program includes, but not limited to, identifying types of protocol used to transmit the code from the camera and translating the code to native language if it is needed.

[0122] At block **1008**, the process examines whether the data comes from a PC. If block **1008** is false, the process moves to the block **1002**. On the other hand, if block **1008** is true, which indicates that the data comes from the PC, the process moves from block **1008** to block **1010** where the data is received. At block **1012**, the process examines whether the data comes from Internet connector. If block **1012** is false, the process loops to the end block where the process ends.

[0123] However, if block **1012** is true, which indicates that the data comes from Internet connector, the process proceeds to block **1014** where the process examines whether the communication is a two-way communication. If it is a two-way communication, an interactive communication is possible. If block **1014** is false, which indicates that the communication is a one-way, the process moves to block **1018** where the DMF one-way procedure is invoked to receive the data. For example, a pager type of communication scheme is a typically type of one-way communication device and interactive communication is not permitted. After block **1018**, the process moves to the end block where the process ends.

[0124] On the other hand, if block **1014** is true, which indicates that the communication is a two-way or more than one-way communication, the process moves to block **1016** where the process invokes the DMF two-way interactive program to handle the data. After block **1016**, the process moves to the end block where the process ends.

[0125] FIG. **12** is a flowchart **1200** illustrating an embodiment of different modes for a DMF. Flowchart **1200** illustrates a registration mode, change menu mode, and running mode. The process begins at the start block and proceeds to block **1212** to examine whether it is a registration mode. If block **1212** is true, which indicates that it is a registration mode, the process proceeds from block **1212** to block **1214** where the process creates a user profile. After block **1204**, the process moves to block **1206** where the process sets up the menu and stores the menu to the corresponding user profile. After block **1206**, the process ends.

[0126] If block **1202** is false, which indicates that it is not a registration mode, the process moves from block **1202** to block **1208**. At block **1208**, the process examines whether it is a change menu mode. DMF contains a menu, which is used to configure DMF when DMF is used to display information under the information mode. If block **1208** is true, which indicates that it is a change menu mode, the process proceeds to block **1210** where the menu is updated.

[0127] If block **1208** is false, the process proceeds to block **1212** and examines whether it is a running mode. During the running mode, DMF fetches the menu from a corresponding user profile and configures the display screen according to the menu. If block **1212** is true, it indicates that it is a running mode, the process proceeds to block **1214**. At block **1214**, the process retrieves the menu from a corresponding user profile. At block **1216**, the information mode of DMF is set up according to the menu. After block **1216**, the process ends. If block **1212** is false, the process moves to the end block where the process ends. It should be noted that the flowchart **1200** may contain more than three modes.

[0128] FIG. **13** is a flowchart **1300** illustrating an embodiment of DMF window for data implementation. In one embodiment, DMF network service **1058** employs DMF Window to manage the user profile database. The process starts at the start block and proceeds to block **1302**. At block **1302**, the process begins DMF window. At block **1304**, DMF window allocates a portion of screen identified as DMF storage and uses icons or thumbnails to list image files stored in DMF under the DMF storage. Thumbnail is a miniaturized picture that represents the image. At block **1306**, DMF window further allocates a second portion of screen identified as global storage where various image files are listed using icons or thumbnails. In one embodiment, image files listed under the global storage are available to DMF.

[0129] At block **1308**, DMF window allows a user to add an image to DMF by moving the corresponding icon or thumbnail from the global storage (one portion of screen) to the DMF storage (another portion of screen). For example, a user can click an icon and drag the icon from the portion of screen identified as the global storage to the portion of screen identified as the DMF storage. At block **1310**, DMF window allows a user to delete an image from DMF by removing the corresponding icon or thumbnail from the DMF storage. For example, a user can click a thumbnail that represents the image to be deleted and drag the thumbnail to the trashcan.

Plural DMF Display Arrangements

[0130] As is illustrated in FIGS. **14** and **15** a plurality of DMFs **20*a*-20** can be provided in a single area such as a room **1402**. In the embodiment of FIGS. **14** and **15**, DMFs **1404**, **1406** and **1408** are arranged on a common wall **1404** of room **1402**. As is further illustrated in FIGS. **14** and **15**, DMFs **1404**, **1406** and **1408** each present image content in the form of image modulated light that emanates from display devices **1414**, **1416** and **1418** associated with DMFs **1404**, **1406** and **1408** respectively and that radiates within a presentation zones **1424**, **1426** and **1428** so that the images presented by display devices **1414**, **1416** and **1418** are viewable within room **1402**

[0131] Presentation zones **1424**, **1426** and **1428** overlap and in areas where all of the presentation zones **1424**, **1426** and **1428** overlap image content from all of DMFs **1404**, **1406** and **1408** can be seen. Such a region of overlap is referred to herein as a presentation space **1500**.

[0132] In the arrangement illustrated in FIGS. **14** and **15**, two criteria principally define the extent of presentation space **1500**, the orientation of each display device of each DMF and the shape of presentation area provided by each of DMFs **1404**, **1406** and **1408**.

[0133] In the arrangement illustrated in FIGS. **16** and **17** a further issue related to defining a presentation space is illustrated, specifically, it will be appreciated that the presentation zone of a display is a function of both of the rate of propagation of the image modulated light from DMFs **1604**, **1606** and **1608** and the propagation distance **1704**, **1706** and **1708** from each display. As is illustrated in these figures, DMFs **1604** and **1608** are separated from a person **1710** by a first distance **1712** along projection axes **1714** and **1716** while DMF **1606** is separated from person **1710** by a second distance **1718** along

a projection axis **1720** that is smaller than the first distance **1712**. Accordingly, the region of overlap and thus presentation space **1722** is limited by the lesser extent of propagation of light from DMF **1606**.

[0134] It will be appreciated from this that in managing the presentation of content across multiple it is necessary to have at least a two dimensional understanding of the distribution of the DMFs used to present the content and preferably a three-dimensional understanding of the position of the DMFs that will be used to present visual content in the presentation space.

System Set-Up

[0135] FIG. **18** shows a perspective view of one distribution of DMFs in a room to provide a presentation space. There are a variety of ways in which positional information can be obtained for DMFs **1802-1814**. In the embodiment of FIG. **18**, DMFs **1802-1814** are arranged in a room **1800** in a free standing manner that is, there are no fixed locations for DMFs **1802-1814**.

[0136] In such an embodiment the location of and number of DMFs **1802-1814** available for presentation of visual content in presentation space **1820** can be determined in such a situation using a variety of different approaches, some of which are discussed in U.S. Pat. No. 7,091,926 which involves determining a location of a plurality of different display screens to form a generally continuous display area to provide a surround type visual experience.

[0137] In general the '926 patent notes that screen positions can be predetermined, designated, or sensed. Sensing can include using remote sensing devices such as acoustic, radio-frequency, infrared, or other sensing systems. For example, a user can indicate three points of a screen's perimeter by placing an infrared emitter on each of the points. A computer system is informed of each point by, e.g., a user keypress at or near the time of emitter placing. Once three points, such as three corners of a display screen, are known, the three-dimensional position of the screen, along with the screen dimensions, can be determined.

[0138] Sensing can also be performed using digital photography techniques, in that it will be appreciated that a digital image can be captured of the arrangement of DMFs **1804-1814** from a position within presentation space **1820**. Such a digital image can be analyzed to identify objects in the presentation space that are potentially DMFs, for example such image analysis can be performed by searching for a background pattern—the wall, and then looking for interruptions in the background area having sizes, shapes, aspect ratios or other image conditions that are indicative of display devices.

[0139] In one approach the DMFs **1804-1814** can be operated in a mode wherein they present identifying information on their respective display units **1834-1844** and also present indicia indicating the parameters of the display units. Such identifying information and display parameters can be presented in a bright color such as a yellow, red or white. This type of setup mode can be captured with a portable video capture device with the video feed providing feed back to the control circuitry in real time as the system cycles through DMFs **1804-1814**. Thus, the pattern and the location of each individual DMF within the pattern are determined. This portable video capture device could be within the remote control of the system of DMFs.

[0140] As is also noted in the '926 patent, three dimensional sensing can be by any means as is known in the art. For example, laser scanning, coordinate measuring machines, etc. can be used along with triangulation techniques to identify positions. Another approach is to use global positioning system (GPS) sensing. Other alternatives include angulation using phased antenna arrays, imaging using one or multiple cameras and scene analysis, etc.

[0141] Another type of sensing is mechanical sensing. This can use a movable arm located at a known point where the end of the arm is touched (or moved near) to one or more points of a screen. Joints or hinges can be affixed at places where screens are adjacent. Such joints can measure the angles made by the planes of the adjacent screens so that positions of secondary screens relative to a main screen can be determined. This is usually sufficient to determine accurate positions of the secondary screens. Sizes of the screens can be manually input by the user so that presentation software can compute only the views, and viewport sizes, necessary to create information to be displayed on each of the screens. Such sensing joints can be made strong enough to hold and support multiple screens. An example of such a joint is described, below.

[0142] Another setup procedure can include a menu of patterns that the screens will make up. A pattern menu can be available over a network or simply in a user manual. Once a pattern is determined, each DMF will have an assigned location within the pattern. An embodiment of the invention could include two rotating wheels that on the back of each DMF. Each wheel can represent a menu of bit codes that can be labeled pattern number and frame number. A user can simply rotate the wheel to the desired pattern number, on the back of each DMF. Furthermore, the user determines which DMF number corresponds to the placement within the pattern, thusly rotating the wheel on the back of the frame marked frame number. This process is repeated until all frames are numbered associated with their placement location assignment.

[0143] One useful way to determine positions of screens is simply to ask a user to input the positions. This manual position designating includes having a user make measurements of distances and angles which are then entered into a computer system that calculates the screen positions from the measurements. The user measurements can be rough approximations and screen positions can still be determined with enough accuracy to create a coherent multi-screen display.

[0144] Screen positions can be calibrated. One form of calibration allows a user to move models of screens on a computer display. Each screen model corresponds to an actual screen that the user is viewing. The model positions are used to generate views for the screens as the user is moving a model. When the user sees matching views of a scene, test pattern, reference object, etc., among screens that include the model screen being moved, then calibration is achieved. The user indicates to a computer system that the current model position results in a view that is coherent with another screen (e.g., the main screen) and the computer system can then use the information to generate further views for the screen corresponding to the model.

[0145] Screen positions can be predetermined. For example, a presentation program may have default, or optimal, screen placements determined by a program, or presentation, author. In this case, the user is directed to place the screens in a predetermined orientation. It is possible that an automated system can move the screens without user intervention.

[0146] For example as illustrated in FIG. **23** DMFs can be supported by movable support systems, including but not limited to cable based systems (as shown in FIG. **21**), DMFs can also be on pivoting platforms, moveable robotic arms, on moveable robotic arms or rope and pulley systems, etc.

DMF Arrays

[0147] Turning now to FIG. **19**A, what is shown is a front perspective view of a digital media frame array **1900**. As is shown in FIG. **19**A, digital media frame array **1900** comprises an array structure **1902** positioning a plurality of digital media frame supports **1904** to define at least a two dimensional arrangement of the plurality of DMFs **1910**. In the embodiment illustrated in FIG. **19**A, digital media frame supports **1904** are illustrated generally as a recessed areas within an generally rigid array structure **1902** and each are arranged to receive one DMF **1910**. However, in other embodiments, supports **1904** can take on different shapes and can be adapted to support DMFs in other ways. Further, it will be appreciated that in various embodiments DMF supports **1904** can be adapted to support more than one DMF **1910**. DMFs **1910** of digital media frame array **1900** can include media frames of various sizes, shapes, and aspect ratios and can be modularly assembled to digital media frame array **1900**.

[0148] In this embodiment, DMFs **1910** are placed in supports **1902** that such that they are arranged along a front surface **1914** of the digital media frame array support **1902**.

[0149] FIG. **19**B illustrates a rear perspective view of the embodiment of digital media frame array **1900** illustrated in FIG. **19**A. As is shown in FIG. **19**B, array support **1902** provides a rear surface **1955** on which a series of individual display holders **1960** are mounted, joined or integrally formed. Power cord **1965** attached wall power supply **1980** provides power to the individual displays **1910** via array interface **1970** which can be of the type such as a Universal Serial Bus (USB) or equivalent such that both power. Data lines **1972** can be provided to each connector **1970** so that data can be conveniently conveyed to DMFs **1910**. This can be done using the USB standard which integrates both power supply and data connections in a single wiring standard. Other arrangements for providing data communication and/or power to DMFs **1910** can be provided including the use of a wide variety of other wired, optical and wireless communications.

[0150] As is illustrated in FIG. **19**B, data lines **1972** converge at an array controller **1975**. In the embodiment illustrated, array controller **1975** is adapted to cause the array interface **1970** to communicate with one of the DMFs **1910** so that the array controller can cooperate with a processor (e.g. processing circuit **236**, processing unit **326**) for the DMF **1901**. This data communication between the array controller **1975** can be used for a variety of purposes. In particular, this allows the array to provide active systems and sub systems that can cooperate with one or more DMF **1910** supported by digital media frame array **1900**. In particular as shown, digital media frame array **1900** has a plurality of different array interaction systems **1908** that so that when digital media frame **1910** is supported by the digital medium frame array **1900**, combination can interact with their environment in ways that the digital medium frame **1910** cannot do when not so supported.

[0151] As is shown in FIG. **19**A, a transparent touch sensitive screen overlay **1940** can be provided to form a touch screen that provides signals to array controller **1975** indicating when and where contact has been made with the touch sensitive surface and wherein array controller **1975** determines data for transmission to a processor for a DFM **1910** that has a display that is located at a position that corresponds to the point of contact. Such a touch screen overlay **1940** for set up and used for a variety of purposes including but not limited to selecting semantic type "play lists", along with the ability for the user to manually manipulate and navigate the image collection. Digital Image **1950** produced by individual media frame **1910** is visible through individual display Matte opening **1945**.

[0152] Another example of such an array interaction system shown in FIG. **19**A is a proximity sensor **1925** which a presence sensor adapted to sense the presence of a person relative to the array and wherein the array controller causes the array interface to transmits signals to the processor from which the processor can determine whether to suspend image presentation. This arrangement can be used to alert the DMFs **1910** as to the presence or absence of a user in a presentation space in order to conserve power when no user is present.

[0153] In still another example, array interaction system can comprise an audio system **1928** illustrated in both FIGS. **19**A and **19**B. Audio system **1928** is adapted to generate audio signals based upon digital audio data provided by the array controller **1975**. The array controller in turn cooperates with the processor of the DMF **1910** to obtain the digital audio data. This can be done by downloading audio data from the DMF **1910** or by obtaining from the DMF **1910** and address of a location that the audio data can be obtained and can be directly connected to a network such as the internet from which such audio data can be obtained or to a device having access to such audio data. In the embodiment illustrated, audio system **1928** comprises audio speakers **1930** powered by audio amplifier **1935** are user to play audio data associated with the visual presentation.

[0154] FIGS. **19**C and **19**D, show another embodiment of an array interaction system **1908** having a remote data signal interface **1920**. Remote data signal interface **1920** is used to communicate with other remote devices such as a remote control unit, digital camera, cell phone or the like. Array controller **1975** the array controller causes the array interface to transmit signals to the processor based upon the signals received from the remote device. Such signals can include image data and instruction data.

[0155] Remote data signal interface **1920** can be of a type that cannot detect a direction from which the signals were sent relative to the array and can be of a type that can detect such a direction. A wide variety of known structures are capable of doing this, including but not limited to hard radio frequency triangulation systems, directional optical sensors.

[0156] As is illustrated in FIG. **19**C when such directional information is available, display system **1900** with remote control interface **1920** controlled by remote control **1915**. Based on the position of the remote control **1915** relative to display system **1900** the controller (not show) interprets the relative positions of the device as a vector direction, which it uses to provide a vector direction for digital image transitions. As illustrated in FIG. **19**C initial images **1951** are transitionally replaced by subsequent image **1953** along the vector determined transition **1952**. This would allow a determination of a vector path **1971** between the remote control **1915** and the display system **1900** or the sensors used to detect remote control signals with the vector path guiding the flow of

image transitions by positioning and would provide an intuitive indication of a source of a new set of digital images.

[0157] FIG. **19**D illustrates an alternative position for remote control **1915** relative to display **1900**. In this example the remote control **1915** is positioned by the user at the center of the right edge of display system **1900** and pointing horizontally and to the left establishing vector path **1973**. Now initial images **1951** are replaces by image transitions **1952** and subsequent images **1953**.

[0158] In other embodiments, array controller **1975** can enable the sharing of other resources with DFM **1975** that have the effect of altering the ability of the DFM **1976** to provide environmental stimulus or to receive environmental stimulus.

[0159] For example, array controller **1975** can provide a shared memory for the DFMs **1910** supported by DFM array **1975**. In such an embodiment, the array interaction system comprises a memory buffer system to provide additional memory capacity as necessary to enable specific memory intensive forms of environmental interaction such as audio or video presentations to be made. Such a memory buffer may be removable and/or remotely updateable display via a wireless data transfer modality using wireless communication transceiver **1995** and managed by controller and processor **1990**. In another embodiment the array interaction system can comprise a supplemental processing system to provide additional processing capacity to the processor as necessary to enable specific processing intensive forms of environmental interaction including but not limited to audio and video presentations.

[0160] As is also shown in the embodiment of FIG. **19**B, a mount for wall attachment **1985** is used to mount the digital media frame array **1900** to vertical surfaces like conventionally mounted photographic frames, mirrors, flat art and the like via a robust hanging device such as a picture hanger.

[0161] It will be appreciated that where a digital media frame array is used that has fixed supports to receive DFMs **1910** and that also provides independent data cables and connectors for data communication between array controller **1975** and DFM **1910**, array controller **1975** can be adapted to determine which of the plurality of digital medium frames is supported by which of plurality of supports, and can use this determination to further automatically determine relative positions for the DFMs **1910**. It will be appreciated that such a digital media frame array can take any of a variety of forms and can position the digital media frames **1910** in a plurality of different orientations including positions are separated from each other along three dimensions.

[0162] Referring to FIG. **20** what is shown is a stanchion mounted display system, which provides mount for the digital media frame cluster **2000** including individual displays of digital media frame array **2005**.

[0163] Power is provided to the digital media frame cluster **2000** by the wall power supply **2010** via power cord **2015**, which is connected to the support base and electronics housing **2025**. Individual display mount and data interface **2030** are provided along the length of support stanchion **2035** and are used to mechanically attach individual displays of digital media frame array **2005** via a hook, not shown, and provide them with power and data which can be of the type such as a Universal Serial Bus (USB) or equivalent.

[0164] Stanchion **2035** may be in a two part telescoping assembly and spring or pneumatically loaded to cause the telescoping sections expand outward to provide secure pressure mounting between a typical floor and ceiling without damaging or modifying either surface. Support base and electronics housing **2025** is inclusive of; remote data signal interface, individual display data power interface, shared memory for the display array, display controller and processor, and wireless communication transceiver, all not shown. Audio speaker and Audio amplifier **2040** are provided in a unitary housing that uses the same individual display mount and data interface **2030** to provide attachment to station **2035** and data and power. Digital Image **2045** is presented on individual display of digital media frame array **2005**. Remote data signal interface **2055** is used to communicate with other controlling devices such as a remote control unit, digital camera, cell phone or the like. Proximity sensor **2050** is optionally used to alert the unit to the presence of a user in order to conserve power when no user is present.

Selecting Visual Content for Presentation

[0165] FIG. **23** shows a perspective view of a room **2300** having an arrangement of DFMs therein comprising a first that are arranged as described above with reference to FIGS. **14** and **15**. FIG. **24** shows a top down view of the arrangement of FIG. **23**, similar to FIG. **15** above, but also illustrating system level components of a first embodiment of display system **2410** that makes use of DMFs **2304**, second DMF **2306**, and third DMF **2308**.

[0166] As is illustrated in FIG. **24** the system **2410** incorporates three DFMs: first DMF **2304**, second DMF **2306**, and third DMF **2308**, however this is done for simplicity and, in practice, a much larger number of DMFs can be used. As is also illustrated in FIG. **24** a controller **2420** is provided that is logically connected to first DMF **2304**, second DMF **2306**, and third DMF **2308** such that data can be exchanged therebetween. The method of such a logical connection can be made using any form of wired or wireless communication. As such a logical connection can be made between controller **2420** and first DMF **2304**, second DMF **2306**, and third DMF **2308** using any of the above described manners.

[0167] In one embodiment, controller **2420** can comprise a DFM server **720** as illustrated in FIG. **7** and that is logically connected to the DFMs in the same manner described therein. In another embodiment, controller **2420** can comprise a DMF network server ("DNS") **1059** of FIG. **10**. In still other embodiments, controller **2420** can comprise any type of computing or processing system and a communication system (not shown) that enables a logical connection to be established with the DFMs. Finally, in yet another embodiment, the functions and methods described hereinafter as being performed by controller **2420** can be performed by one or more of processing circuits **220** or processing units **320** acting alone or in combination. Controller **2420** is also logically connected to a source of digital images **2422**. The source of digital images can include any of digital still cameras, digital video cameras, scanners, computers, local servers, remote servers, memory devices, the internet, printers, internet appliances, a remote control, personal digital assistants, personal video players, telephones, telecommunication networks, cellular telephones, analog televisions or digital televisions or television signal distribution systems such as cable, satellite or other television systems and/or television storage systems such as recorders or players of television systems such as solid state, optical, or magnetic television signal recording and/or playback systems. The source of digital images **2422** can include an Internet connection or a direct connection to

external existing databases such as stock photo databases or private databases. It is also foreseeable that public sites will develop for dissemination of such graphical and/or image materials.

[0168] In one embodiment, individual digital images can be located within such a source of digital images by use of a search function or engine. Where the source of digital images has digital images that are organized using a relational database indexed by a plurality of indices a search of such a database can be made by submitting keywords and a response to this search can comprise a listing of responsive digital image file names or an arrangement of thumbnails or other response.

[0169] It is understood by those skilled in the art that the source of digital images **2422** can use more sophisticated indexing strategies and that any database developed using such strategies can be used to locate and identify digital images for presentation. For example, the images may be indexed in multiple categories such as based on image content descriptions and inferences, rather than keywords. Where keywords may describe the circumstances surrounding the image, that is, the; who, what, where, when, and why parameters, content descriptors actually describe the data within the digital graphical material. Such factors, referred to as Image Content are obtained from the image itself and may include a color histogram, texture data, resolution, brightness, contrast, facial recognition, object recognition, text recognition, and so forth. In addition the content recording or utilization device itself produces another semantic element referred to as Camera Metadata and includes; Time/Date, GPS location data, Image orientation, Image size (resolution, format, compression), Capture setting (sports, portraits, macro, etc), Flash status (on/off/fill), Focus position, Zoom setting, Video sequence duration, Video encoding type, Video "key frame" designation, Video "still frame" designation, and so forth. By combining Image content data and camera Metadata from an image and/or event based perspective, establishing semantic relations between images and image objects can be accomplished. Using recorded metadata such as GPS location information, time/date of recording, and derived segment assignment such as eye/face recognition and object identification a semantic relationship can be established.

[0170] In addition to information gained at the camera level, image content and audio track, the marriage of information about the people in the pictures, the places, the event type and purpose is now being synthesized by learning computers in creating a semantic web of information. One such patent, U.S. Pat. No. 7,035,467 by Nicponski, teaches reading images for cakes, brides, children and thus inferring the event. Global, national, regional, local and personal dates of significance such as holidays, birthdays etc. With a zip code, a birth date, and access to a school calendar, trained systems can perhaps retrieve greater information than before regarding a son's first grade concert at school. Various patents such as, U.S. Pat. No. 5,652,880 suggest a framework for storing codified linkages between objects that can facilitate searching and retrieving semantic elements that are associated with content.

[0171] FIG. **25** outlines one embodiment of a method for operating controller **2420**. In step **2502**, system controller has access to a source of digital images **2422**. A user interface **2424** is provided to enable a user make a user input to controller **2420**. User interface **2424** can include a remote control such as a hand held remote device, or wired or wireless keypad and mouse. A display **2426** is optionally provided to provide feedback to a user of system **2410** and/or to enable graphic user interfaces to be used to facilitate such user input and feedback. Display system **2410** can also comprise one or more of first DMFs **2304**, second DMF **2306**, and third DMF **2308**.

[0172] In a first step of this method, a system setup function is performed (step **2502**). In this step, the setup functions described above are executed to determine at least the number of DFMs that will present content into a display space and optionally to identify the relative position of each DFM. Additional setup functions such as those described above can also be performed including but not limited to determining characteristics of each including, but not limited to, display resolution, display color information, display refresh rates, processing unit information that identifies characteristics including but not limited to processing speed, multithreading, and multicore characteristics of the processing unit, memory characteristics such the overall capacity, type and speed of such memory, a memory map of data stored in the memory, and/or the nature of and the status of any data stored in such memory. Further, during setup a listing of capabilities of each DFM can be provided indicating the availability of certain types of memory, communication capabilities, processing capacity or programming or other capabilities. Other display characteristics for each DFM can also be provided during setup. Such other characteristics can include data an aspect ratio of a display of a DFM an orientation for a DFM A semantic type is then determined that comprises at least two semantic elements of a digital image to be presented (step **2504**). This can be done manually by causing a user to use user interface **2424** and display **2426** to identify the semantic type for the images to be presented. In another embodiment, semantic type can be chosen automatically by controller **2420** based upon user profiles, preferences or other information.

[0173] The determined semantic type can be used by controller **2420** to enable automatic organization of the accessed digital images according semantic information. The term "semantic information" is used herein to refer to the meaning of a particular portion of data as interpreted by a human observer. Semantic information is determined based upon of one or more semantic elements. For example, semantic information refers to individual semantic elements such as the meaning of a word or phrase in a text document or the interpretation of a particular pattern of light and shadow in an image as a pair of eyes and also to semantic information that can be derived from combinations of semantic elements such as observing the text and the pair of eyes in the same image. The semantic type determination is used by controller **2420** to identify semantic information that is desired in the digital images to be presented and thus, has the effect of defining at least one semantic element to drive the search.

[0174] Semantic elements in turn can be determined by identifying context indicators in digital images and/or any metadata associated therewith. Various rules are used to identify context indicators in digital images and for conceptual clarity, rules that are used to identify context indicators can be organized into contextual frameworks of categories of related context indicators and associated rules for determining such context indicators. In a contextual framework, context indicators are particular items of semantic information that are identified by the associated rules as being relevant to the identified context. An individual contextual framework is, thus, inclusive of some of the semantic information poten-

tially available in a digital image and exclusive of other semantic information potentially available. The general nature of the included semantic information can be indicated by the designated semantic element, which can be associated with a category of human contexts, as in the following examples.

[0175] One example of a contextual framework is a chronological contextual framework, that is, a framework of rules related to chronology that identify the chronological context of the set of digital images. For example, one rule can cause controller **2420** to analyze the digital images and any associated metadata to determine a range of dates and times over which the digital images were captured, another rule can examine each digital image and associated metadata to try to associate the set of content data files with a time of day, still another rule can cause controller **2420** to analyze the content data files to determine a time of day that a particular event occurred, and yet another can cause controller **2420** to determine the time of year in which the set of content data files were created. A chronological framework can also include rules that cause controller **2420** to determine whether the set of content data files represents a single event or a sequence of different events and/or for organizing the set of content data files into event groups. Methods for making such an event based clustering of content data files are well known. Such chronological indicators might be found in metadata associated with selected content data files, such as date and time information, or by way of analyzes of the content of the content data files for chronological indicators such as image, text or audio elements that are known to connote chronological happenings such as major holidays or events marking rites of passage such as birthdays and the like.

[0176] Analysis of digital images and metadata can also be used in combination with additional information provided by the rules of the contextual framework. For example, date information can be checked using rules that include a table of holidays and dates of global, regional or personal significance.

[0177] This same approach applies to other types of contextual framework.

[0178] Another example of a contextual framework is an environmental contextual framework that incorporates rules for locating environmental context indicators within the content data files. Such environmental context indicators generally describe rules for determining ambient conditions within which a narrative is told, for example, rules for determining weather conditions, daylight and indoor/outdoor status can be applied. Environment indicators, like chronological indicators, can be determined from metadata and analyses of content, and by use of additional outside information. For example, metadata on white balance can indicate indoor/outdoor status, exposure level can indicate light or dark outdoor conditions. Alternatively, time and date information, in combination with geopositioning information, such as data provided by the Global Positioning System (GPS) can be used in combination with rules that access an outside database of weather information to determine weather conditions at the time particular content was created.

[0179] Still other examples of a contextual framework include, but are not limited to a social framework that defines rules for location and social context indicators in the content data files such as groupings of people depicted therein. For example, family groupings, school groupings, work groupings and the like can be identified using appropriate rules.

[0180] Other contextual frameworks can be provided, for example, political and technological contextual frameworks can include, as context indicators, political figures or indicia of technological development, respectively. These context indicators can be selected by rules that access an outside database using other context indicators, such as: location, date, and the like.

[0181] Other types of contextual frameworks include: athletic, educational, and geographic. Contextual frameworks can combine or subdivide different types to meet particular needs. For example, an athletic and educational contextual framework can be provided. Likewise, an athletic contextual framework can be replaced by separate contextual frameworks for different sports. Contextual frameworks can be global, that is, usable by all users in all circumstances, or can be limited in application. For example, contextual frameworks can be provided that are specific to a particular author, subject, type or work of communication, manner of creation, or manner of use.

[0182] Contextual rules used in determining and prioritizing context indicators can be binary or probabilistic. For example, a single contextual rule or group of rules can be provided in the form of a Bayesian net. Contextual rules, and context indicators used in a particular contextual framework can be determined heuristically or by use of automated classification techniques, such as use of a genetic algorithm. Use of these techniques are well known to those of skill in the art.

[0183] Digital images are then selected for presentation based upon the determined semantic type (step **2506**). This can be done by generating inference queries are then obtained by applying determined context indicators to a knowledge base for at least one person. Such a person can comprise, for example, the user, a person selected by the user or a person observed in a presentation space for system **2410**. Further, for this purpose, such an associated person can also include, for example, any person, character depicted or other anthropomorphic representation contained within any digital image. There can be one or more than one associated person such as where two people are found in the presentation space. For convenience in explanation, the knowledge base is generally discussed herein in relation to a single person.

[0184] The knowledge base for the person can be stored in memory **226**, **326** or on any memory that can be accessed by controller **2420**. The knowledge base contains reference information about the relevant person that is accessed using the determined context indicators. The reference information comprises information, such as biographical information, about the relevant person including but not limited to educational information, professional information, social information and the like. The reference information is used in combination with context indicators to form inference queries that are used to locate digital images in the accessed digital image source having semantic information associated with the determined semantic type.

[0185] For example, the reference information can include educational history for a person. The educational history can identify schools attended by the relevant person and the years of attendance. If a context indicator suggests that the set of content data files were captured during a particular year and the knowledge database indicates that the associated person was attending a particular school during that year, then inference queries can be generated for content data files that are related to the school and/or people who attended the school during the relevant year.

[0186] In one embodiment, all of the selected digital images are provided for inclusion in the work of communication. However, this can result in the presentation of a very large number of digital images.

[0187] Alternatively, the digital imaged and/or associated metadata provided for inclusion can be limited in some manner. For example, digital image and/or associated metadata can be limited to a predetermined metric, such as number of digital image and/or associated metadata or total size or to those that have a priority greater than a minimum level of priority. The metric used can be determined heuristically and can vary depending upon factors, such as the contextual framework, the associated person, the subject, type or work of communication, manner of creation, and manner of use.

[0188] In one embodiment, only those digital images meeting a predetermined priority metric are selected from those selected automatically according to semantic type. Alternatively a user can identify particular images from the selected images for presentation.

[0189] The determination of significance is based upon the nature of the digital images found during the search and the relationship of the digital images the person. A higher priority is given to digital images depicting content having a greater level of immediacy for or closer relationship to the associated person. Thus, in the above described search for school related digital image, those digital images having content that depicts the present appearance of the school might be given lower priority than digital images that present subject matter from the years in which the person attended that school. Similarly, content data files actually depicting the relevant person at the time and at the school would be determined to be of still higher significance and thus given greater priority.

[0190] There are a number of means of measuring significance. Any system of significance measure can be used. The preceding discussion has been directed to a particular example of such a system, in which psychological significance is measured using such as Maslow's Hierarchy of needs as described in Abraham H. Maslow, Motivation and Personality (1954). The psychological significance can also be multiplied by intensity, ubiquity and duration to provide a product that will be referred to as the absolute significance. It should be noted that other forms of gauging significance (social, economic, historical, political and so on) may be equally or more appropriate depending on the needs of the user.

[0191] Controller **2420** then determines a manner for presenting the selected digital images using the determined number of display devices (step **2508**) and presents the selected digital images using the determined manner (step **2510**). Various methods for presentation are discussed in the following section.

Manners for Presenting Digital Images

[0192] In one embodiment, the controller **2420** can select a first manner for presenting the selected digital images can be made by evaluating characteristics of the DMFs and assigning digital images to particular DMFs based upon the image characteristics of the digital images. This first manner does not require knowledge of the positional arrangement of the displays.

[0193] Such characteristics can include frame aspect ratio, orientation, and size. These characteristics of the display can be identified during a set up process. For example, it is highly desirable to match the orientation of the display on a DMF and the orientation of the digital image. In another example, digital images containing video content may be presented using the DMF having a larger display or a display that has a refresh rate or more memory than are available in other DMFs. Remaining images are shown in the smaller frames.

[0194] Another embodiment for frame assignment may be based on image emphasis. U.S. Pat. No. 6,748,097 suggests higher magnification for superior quality images, and thus images of relevance, yet of lesser value would be displayed on the smaller frames. Such image quality can be determined generally using factors such as focus and lighting quality and composition measures as are known in the art. Additional characteristics of the manner of presentation may include how long each image is displayed, types and durations of the transitions, the play of one video at a time while the others are at a start frame, etc.

[0195] Semantic information can also be used as a basis for assigning digital images for presentation on DMFs having particular characteristics. Specifically, it will be appreciated that a determined semantic type can require the identification of digital images that are associated with a combination of a plurality of different types of semantic elements. In one embodiment, a larger or otherwise preferred display can be used to present digital images selected based upon the combination of all of the semantic elements while, non-preferred DMFs are used to present digital images that are found using subsets of the semantic elements of less than all of the combination of semantic elements associated with the semantic type.

[0196] In one example, a determined semantic type can include a family and an associated person can comprise a first parent. Accordingly, inference queries can be generated that seek digital images illustrating groupings of the family which might be obtained by analyzing digital images for a combination of four semantic elements comprising the first parent, a second parent, a first child and a second child. Digital images containing all four image semantic elements can be located and presented on a primary DMF. In this example, second DMF **2306** is determined to be the primary DMF based upon the relatively large display size of characteristics of second DMF **2306** as compared to first DMF **2304** and third DMF **2308** such as those described above, DMF **2304**.

[0197] A first additional inference query can be generated for a first sub-combination of semantic elements depicting the first parent and either of the first child or second child in display. Digital images located by first additional inference query can be displayed either of first DMF **2304** which is larger than third DMF **2308**. Digital images located by a second additional inference query for a second combination for semantic elements that indicating that any of the parents or children are in the digital images can be presented using third DMF **2308**.

[0198] Where any semantic elements suggest that a subset of located digital images are related, controller **2420** can be adapted to cause the presentation of such a subset digital images in a manner that corresponds to the determined relationship. For example, images captured of a common event from different perspectives can be identified and presented in a manner that is consistent with the difference in perspective and in an order that is consistent with the occurrence of events.

[0199] In another example, a digital image might take the form of a video sequence that runs for 20 seconds. Accordingly, controller **2420** can cause the video type digital image

to be presented on second DMF **2306** while presenting related still image type digital images on first DMF **2304** and third DMF **2506**.

[0200] It will be appreciated that audio content or other non-image environmental stimulus that is related to certain digital images can be presented concurrently with the presentation of the related digital images using for example, audio system **1928** or the like.

[0201] In an embodiment where system controller **2420** has established the positions of first DMF, **2304**, second DMF **2306** and third DMF **2308** it becomes possible to define spatial distributions of the that there is information as to where each frame is relative to the other frames images. Such possibilities can be used to help make the presentation of images more intuitively understandable.

[0202] FIG. **26** illustrates one example of a method for presenting images using a plurality of displays separated spatially along at least two axes. As is illustrated in FIG. **26**, the digital images to be presented are obtained (step **2602**). Such digital images can be provided as a result of semantic or other type of search or they can be manually selected. The obtained digital images and any associated metadata are then analyzed to assign an image perspective determination to each of the digital images (step **2604**). In the illustrated embodiment, the following rules can be considered when assigning an image perspective determination to the digital images.

[0203] Upper perspective images can include any digital images having the following discernable characteristics images captured at High Altitude locations, camera pointed up, azimuth angle, pictures of mountains, pictures with high percentage of sky, and people with eyes or head facing downward toward the capture device that captured the digital image.

[0204] Conversely, the lower perspective images can correspond to images taken at low altitude locations, pictures of boats or even under water pictures. Additional characteristics include camera pointing down azimuth angle, and people looking up.

[0205] Mid perspective images can be those that do not have the above described characteristics, or that exhibit characteristics indicate of level photography or perspective, such as equal displacements of sky and land, relatively flat azimuth information or location information suggesting that relatively level display images were captured.

[0206] It will be appreciated that an image can be designated according to this approach on the basis of metadata or semantic information.

[0207] An arrangement of the digital images for presentation on the plurality of the DMFs of such a system can be determined according to the determined multi-dimensional relationship between the digital media frames and according to the determined image perspective (step **2606**). In one embodiment, this can be done, by directing digital images to the DMFs in a manner that is consistent with the perspective assignment, such as by directing high perspective images to upper frames, lower perspective images to lower DFMs and mid-perspective images to DFMs between the upper DFMs and lower DFMs. Middle frames and larger frames can also be earmarked for the best pictures or image emphasis pictures, images including the most people and video content if desired.

[0208] In addition, similar rules can be used to assign digital images with perspective assignments that indicate camera pointed left versus right (part of the GPS standard), people looking right. Here, however, it is more natural and intuitive for the right most perspective images to be presented on the left most frames as such positioning would correspond with people looking left, camera pointed right, etc.

[0209] In other embodiments, chronologically related data can be presented from a left to right can also make up time intervals. Time intervals include breaking up a chronology such as a child's age into the number of columns of frames. In an example where there are 5 columns of frames, the early fifth of the child's life to the first column of frames, the second fifth to the second column and so on. In addition, other elements can provide assignments to rows as well. One type of row assignment may include the example such as child number one in the first row, child number two in the second row and so on.

[0210] It will also be appreciated that the manner of presentation can be influenced by an overall amount of time allowed for the presentation and that presentation time for certain content can be adjusted automatically to crop, extend, accelerate, or segment the presentation of video type digital images in order to better fit an allotted time period for the presentation.

[0211] As noted above image transitions effects can be used to signal when the digital images on any DFM is changed. Images on the various frames can be transitioned using known transition effects and can be transitioned simultaneously with the images on two or more of the DFMs in the system presenting transition effects in a simultaneous manner, a synchronized manner, at various rates and/or sequentially to provide a desired effect.

[0212] Semantic information can also be used as a basis for assigning digital images for presentation on DMFs known positions. Specifically, it will be appreciated that a determined semantic type can require the identification of digital images that are associated with a combination of a plurality of different types of semantic elements. In one embodiment, a central or otherwise preferably located DFM can be used to present digital images selected based upon the combination of all of the semantic elements while, non-preferred DMFs are used to present digital images that are found using subsets of the semantic elements of less than all of the combination of semantic elements associated with the semantic type.

[0213] In one example, a determined semantic type can include a family and an associated person can comprise a first parent. Accordingly, inference queries can be generated that seek digital images illustrating groupings of the family which might be obtained by analyzing digital images for a combination of four semantic elements comprising the first parent, a second parent, a first child and a second child. Digital images containing all four image semantic elements can be located and presented on a primary DMF. In this example one of the DMFs is determined to be the primary DMF relatively central location as compared to other locations of other DMFs.

[0214] A first additional inference query can be generated for a first sub-combination of semantic elements depicting the first parent and either of the first child or second child in display. Digital images located by first additional inference query can be displayed using additional DMFs selected in accordance with their location relative to the primary DMF.

[0215] Where any semantic elements suggest that a subset of located digital images are related, controller **2420** can be adapted to cause the presentation of such a subset digital

images in a manner that corresponds to the determined relationship. For example, images captured of a common event from different perspectives can be identified semantically and presented in a manner that is consistent with the difference in perspective and in an order that is consistent with the occurrence of events.

[0216] In still another example, a selection of a semantic type can involve defining a semantic filter for at least one of the DMFs to be used for presenting digital images. The semantic filter defining at least one semantic element; this can cause the at least one of the plurality of separate DMFs to be used to present content selected from the digital images according to the semantic filter selected for the at least one display device such that digital images having the at least one semantic element are presented.

[0217] Semantic information can also be used as a basis for assigning digital images for presentation on DMFs having known positions five paragraphs back.

[0218] When finished, the controller will repeat the presentation for a predetermined amount of cycles. In another embodiment, upon completion of n cycles, the system could enter a random mode, where semantic types are selected at random for presentation for another predetermined number of cycles at a time. In another embodiment, semantic types are selected within a 1-3 day buffer zone of significant dates to the family based on the profile. If an anniversary is about to occur, the semantic type that is system chosen could be pictures of husband and wife in the past year or number of years that they have been married. In addition digital images can be selected according to season such as by selecting certain semantic types according to season or other chronological factors.

[0219] The invention has been described in detail with particular reference to certain preferred embodiments thereof, but it will be understood that variations and modifications can be effected within the spirit and scope of the invention.

1. A digital image presentation system comprising:

a plurality of digital media frames each having a display surface and driving circuit capable of cooperating to present digital images, with the plurality of digital media frames arranged in a multi-dimensional spatial distribution so that each display surface forms images that are viewable from a presentation space;

analyzing the digital images to assign an image perspective determination to each of the digital images;

a control circuit adapted to use the sensing system determine a multi-dimensional distribution of the digital media frames and to obtain digital image data files from which the control circuit can generate signals causing the digital image to be presented on the plurality of digital media frames;

wherein the control circuit determines an arrangement of the digital images for presentation on the plurality of the digital media frames according to the multi-dimensional relationship between the digital media frames and according to the determined image perspective.

2. The control system of claim **1**, wherein said relational image content comprises a distribution of digital images on the distribution of digital media frames, the presentation of a type of according to at least one semantic element and the distribution of digital media frames.

3. The digital image presentation system of claim **1**, further comprising: an input system having at least one sensor that is adapted to sense at least one condition that is indicative of relative positions of each of the plurality of display wherein said control circuit is adapted to determine the multi-dimensional relationship between the digital media frames automatically.

4. A digital image display system comprising:

a plurality of digital media frames arranged in a spatial distribution and presenting image content that is viewable in a viewing area;

a control system for obtaining image content for presentation on the plurality of digital media frames, and for generating signals causing the obtained image content to be presented on the plurality of digital media frames;

wherein said control system determines a vector path between digital media frames and uses the vector path to generate indications reflecting transitions of image data files to or from individual digital media frames within the system.

5. The display system of claim **4**, wherein a sensing system provides data to the control system from which the control system can determine a vector path between the digital media frames and the remote controller.

6. The display system of claim **5**, where the where the vector path is used to generated indications reflecting remote control and data flow in the form of transitions on the display system.

7. The display system of claim **5**, where a wave or ripple indication is orthogonal the vector path between the remote control and the plurality of displays.

8. A method for presenting digital images using a plurality of digital media frames separated spatially along at least two axes, the method comprising the steps of:

obtaining the digital images to be presented;

determining the multi-dimensional relationship between the digital media frames;

analyzing the digital images and any associated metadata to assign an image perspective determination to each of the digital images; and

determining an arrangement of the digital images for presentation on the plurality of the digital media frames according to the multi-dimensional relationship between the digital media frames and according to the determined image perspectives.

9. The method of claim **8**, further comprising the step of determining the multi-dimensional relationship between the digital media frames.

10. The method of claim **8**, further comprising the step of determining the multi-dimensional relationship between the digital media frames by sensing the positions of the digital media frames.

* * * * *