A/53: ATSC Digital Television Standard, Parts 1 - 6, 2007

3 January 2007

Advanced Television Systems Committee, Inc.
1750 K Street, N.W., Suite 1200
Washington, D.C. 20006

Exhibit 1015
TCL v. Maxell - IPR2025-00134

a t s c
Advanced Television Systems Committee

Exhibit 1015
TCL v. Maxell - IPR2025-00134
Page 2 of 136

Doc. A/53, Part 1:2007
3 January 2007

ATSC Digital Television Standard
Part 1 – Digital Television System
(A/53, Part 1:2007)

Advanced Television Systems Committee
1750 K Street, N.W.
Suite 1200
Washington, D.C. 20006
www.atsc.org

Exhibit 1015
TCL v. Maxell - IPR2025-00134
Page 3 of 136

The Advanced Television Systems Committee, Inc., is an international, non-profit organization developing voluntary standards for digital television. The ATSC member organizations represent the broadcast, broadcast equipment, motion picture, consumer electronics, computer, cable, satellite, and semiconductor industries.

Specifically, ATSC is working to coordinate television standards among different communications media focusing on digital television, interactive systems, and broadband multimedia communications. ATSC is also developing digital television implementation strategies and presenting educational seminars on the ATSC standards.

ATSC was formed in 1982 by the member organizations of the Joint Committee on InterSociety Coordination (JCIC): the Electronic Industries Association (EIA), the Institute of Electrical and Electronic Engineers (IEEE), the National Association of Broadcasters (NAB), the National Cable Television Association (NCTA), and the Society of Motion Picture and Television Engineers (SMPTE). Currently, there are approximately 140 members representing the broadcast, broadcast equipment, motion picture, consumer electronics, computer, cable, satellite, and semiconductor industries.

ATSC Digital TV Standards include digital high definition television (HDTV), standard definition television (SDTV), data broadcasting, multichannel surround-sound audio, and satellite direct-to-home broadcasting.

Exhibit 1015
TCL v. Maxell - IPR2025-00134
Page 4 of 136

Table of Contents

1. SCOPE AND DOCUMENTATION STRUCTURE 5
   - 1.1 Documentation Structure 5
2. REFERENCES 5
   - 2.1 Normative References 5
   - 2.2 Informative References 6
3. DEFINITIONS 6
   - 3.1 Compliance Notation 7
   - 3.2 Treatment of Syntactic Elements 7
   - 3.3 Terms Employed 7
   - 3.4 Symbols, Abbreviations, and Mathematical Operators 12
     - 3.4.1 Arithmetic Operators 12
     - 3.4.2 Logical Operators 13
     - 3.4.3 Relational Operators 13
     - 3.4.4 Bitwise Operators 14
     - 3.4.5 Assignment 14
     - 3.4.6 Mnemonics 14
     - 3.4.7 Constants 14
     - 3.4.8 Method of Describing Bit Stream Syntax 14
       - 3.4.8.1 Definition of bytealigned Function 15
       - 3.4.8.2 Definition of nextbits Function 15
       - 3.4.8.3 Definition of next_start_code Function 15
4. SPECIFICATION AND CONSTRAINTS (NORMATIVE) 16
   - 4.1 ATSC System Definition 16
   - 4.2 Digital Television Services 16
5. SYSTEM OVERVIEW (INFORMATIVE) 16
   - 5.1 System Block Diagram 17

ANNEX A: HISTORICAL BACKGROUND (INFORMATIVE) 19

1. FOREWORD 19
2. HISTORICAL BACKGROUND 19
   - 2.1 Advisory Committee on Advanced Television Service (ACATS) 20
   - 2.2 Digital HDTV Grand Alliance (Grand Alliance) 20
   - 2.3 Organization for Documenting the Digital Television Standard 21
   - 2.4 Principles for Documenting the Digital Television Standard 21

Exhibit 1015
TCL v. Maxell - IPR2025-00134
Page 5 of 136

Index of Tables and Figures

Table 3.1 Next Start Code 15
Table 4.1 Service Types 16

Figure 5.1 ITU-R digital terrestrial television broadcasting model. 17

Exhibit 1015
TCL v. Maxell - IPR2025-00134
Page 6 of 136

ATSC Digital Television Standard – Part 1: Digital Television System

1. SCOPE AND DOCUMENTATION STRUCTURE

The Digital Television Standard describes the system characteristics of the U. S. advanced television (ATV) system. The document and its normative Parts provide detailed specification of the parameters of the system including the video encoder input scanning formats and the pre-processing and compression parameters of the video encoder, the audio encoder input signal format and the pre-processing and compression parameters of the audio encoder, the service multiplex and transport layer characteristics and normative specifications, and the VSB RF/Transmission subsystem.

1.1 Documentation Structure

The documentation of the Digital Television Standard consists of this Part and several related Parts that provide a general system overview, a list of reference documents, and sections relating to the system as a whole. The system is modular in concept and the specifications for each of the modules are provided in other parts:

Part 1 – System (formerly the body, plus the former Annex F)

Part 2 – RF/Transmission System Characteristics (formerly Annex D)

Part 3 – Service Multiplex and Transport Subsystem Characteristics (formerly Annex C)

Part 4 – MPEG-2 Video System Characteristics (formerly Annex A)

Part 5 – AC-3 Audio System Characteristics (formerly Annex B)

Part 6 – High Efficiency Audio System Characteristics (formerly Annex G).

2. REFERENCES

At the time of publication, the editions indicated were valid. All standards are subject to revision and amendment, and parties to agreements based on this standard are encouraged to investigate the possibility of applying the most recent editions of the documents listed below

2.1 Normative References

Specific normative references can be found in each Part of this Standard. Those Parts are listed below along with an additional normative reference applicable to all Parts:

[1] ATSC: "ATSC Digital Television Standard, Part 2 – RF/Transmission System Characteristics," Doc. A/53, Part 2:2007, Advanced Television Systems Committee, Washington, D.C., 3 January 2007.

[2] ATSC: "ATSC Digital Television Standard, Part 3 – Service Multiplex and Transport Subsystem Characteristics," Doc. A/53, Part 3:2007, Advanced Television Systems Committee, Washington, D.C., 3 January 2007.

[3] ATSC: "ATSC Digital Television Standard, Part 4 – MPEG-2 Video System Characteristics," Doc. A/53, Part 4:2007, Advanced Television Systems Committee, Washington, D.C., 3 January 2007.

Exhibit 1015
TCL v. Maxell - IPR2025-00134
Page 7 of 136

[4] ATSC: "ATSC Digital Television Standard, Part 5 – AC-3 Audio System Characteristics," Doc. A/53, Part 5:2007, Advanced Television Systems Committee, Washington, D.C., 3 January 2007.

[5] ATSC: "ATSC Digital Television Standard, Part 6 – High Efficiency Audio System Characteristics," Doc. A/53, Part 6:2007, Advanced Television Systems Committee, Washington, D.C., 3 January 2007.

[6] IEEE: "Use of the International Systems of Units (SI): The Modern Metric System", Doc. IEEE/ASTM SI 10-2002, Institute of Electrical and Electronics Engineers, New York, N.Y., 2002.

2.2 Informative References

The Digital Television Standard is based on the ISO/IEC MPEG-2 Video Standard [15], the Digital Audio Compression (AC-3) Standard [7], and the ISO/IEC MPEG-2 Systems Standard [14]. Those references are listed here for the convenience of the reader. In addition, a guide to the use of the Digital Television Standard [8] is listed.

[7] ATSC: "Digital Audio Compression (AC-3)," Doc. A/52B, Advanced Television Systems Committee, Washington, D.C., 14 June 2005.

[8] ATSC: "Guide to the Use of the ATSC Digital Television Standard," Doc. A/54A, Advanced Television Systems Committee, Washington, D.C., 4 December 2003.

[9] ATSC: "Program and System Information Protocol for Terrestrial Broadcast and Cable," Doc. A/65C with Amendment No. 1, Advanced Television Systems Committee, Washington, D.C., 2 January 2006 (Amendment No. 1 dated 9 May 2006).

[10] ATSC: "Data Broadcast Standard," Doc. A/90 with Amendment No. 1 and Corrigendum No. 1 and No. 2, Advanced Television Systems Committee, Washington, D.C., 26 July 2000 (Amendment 1 dated 14 May 2002, Corrigendum 1 and 2 dated 1 April 2002).

[11] ATSC: "Software Download Data Service," Doc. A/97, Advanced Television Systems Committee, Washington, D.C., 16 November 2004.

[12] ATSC: "Synchronization Standard for Distributed Transmission, Revision A," Doc. A/110A, Advanced Television Systems Committee, Washington, D.C., 19 July 2005.

[13] ATSC: "Code Point Registry," Advanced Television Systems Committee, Washington, D.C., 2007, http://www.atsc.org/standards/cpr.html.

[14] ISO: "ISO/IEC IS 13818-1:2000 (E), International Standard, Information technology – Generic coding of moving pictures and associated audio information: systems."

[15] ISO: "ISO/IEC IS 13818-2:2000 (E), International Standard, Information technology – Generic coding of moving pictures and associated audio information, video."

3. DEFINITIONS

With respect to definition of terms, abbreviations, and units, the practice of the Institute of Electrical and Electronics Engineers (IEEE) as outlined in the Institute's published standards shall be used [6]. Where an abbreviation is not covered by IEEE practice, or industry practice differs from IEEE practice, then the abbreviation in question will be described in Section 3.4 of this document. Many of the definitions included therein are derived from definitions adopted by MPEG.

Exhibit 1015
TCL v. Maxell - IPR2025-00134
Page 8 of 136

3.1 Compliance Notation

As used in this document, "shall" denotes a mandatory provision of the standard. "Should" denotes a provision that is recommended but not mandatory. "May" denotes a feature whose presence does not preclude compliance, which may or may not be present at the option of the implementor.

3.2 Treatment of Syntactic Elements

This document contains symbolic references to syntactic elements used in the audio, video, and transport coding subsystems. These references are typographically distinguished by the use of a different font (e.g., restricted), may contain the underscore character (e.g., sequence_end_code) and may consist of character strings that are not English words (e.g., dynrng).

3.3 Terms Employed

For the purposes of the Digital Television Standard, the following definitions of terms apply:

ACATS – Advisory Committee on Advanced Television Service.

access unit – A coded representation of a presentation unit. In the case of audio, an access unit is the coded representation of an audio frame. In the case of video, an access unit includes all the coded data for a picture, and any stuffing that follows it, up to but not including the start of the next access unit. If a picture is not preceded by a group_start_code or a sequence_header_code, the access unit begins with a picture start code. If a picture is preceded by a group_start_code and/or a sequence_header_code, the access unit begins with the first byte of the first of these start codes. If it is the last picture preceding a sequence_end_code in the bit stream all bytes between the last byte of the coded picture and the sequence_end_code (including the sequence_end_code) belong to the access unit.

A/D – Analog to digital converter.

AES – Audio Engineering Society.

anchor frame – A video frame that is used for prediction. I-frames and P-frames are generally used as anchor frames, but B-frames are never anchor frames.

ANSI: American National Standards Institute.

Asynchronous Transfer Mode (ATM) – A digital signal protocol for efficient transport of both constant-rate and bursty information in broadband digital networks. The ATM digital stream consists of fixed-length packets called "cells," each containing 53 8-bit bytes—a 5-byte header and a 48-byte information payload.

ATM – See *asynchronous transfer mode*.

ATV – The U. S. advanced television system.

bidirectional pictures or **B-pictures** or **B-frames** – Pictures that use both future and past pictures as a reference. This technique is termed *bidirectional prediction*. B-pictures provide the most compression. B-pictures do not propagate coding errors as they are never used as a reference.

bit rate – The rate at which the compressed bit stream is delivered from the channel to the input of a decoder.

Exhibit 1015
TCL v. Maxell - IPR2025-00134
Page 9 of 136

block – A block is an 8-by-8 array of pel values or DCT coefficients representing luminance or chrominance information.

bps – Bits per second.

byte-aligned – A bit in a coded bit stream is byte-aligned if its position is a multiple of 8-bits from the first bit in the stream.

channel – A digital medium that stores or transports a digital television stream.

coded representation – A data element as represented in its encoded form.

compression – Reduction in the number of bits used to represent an item of data.

constant bit rate – Operation where the bit rate is constant from start to finish of the compressed bit stream.

CRC – The cyclic redundancy check to verify the correctness of the data.

data element – An item of data as represented before encoding and after decoding.

DCT – See *discrete cosine transform*.

decoded stream – The decoded reconstruction of a compressed bit stream.

decoder – An embodiment of a decoding process.

decoding (process) – The process defined in the Digital Television Standard that reads an input coded bit stream and outputs decoded pictures or audio samples.

decoding time-stamp (DTS) – A field that may be present in a PES packet header that indicates the time that an access unit is decoded in the system target decoder.

discrete cosine transform – A mathematical transform that can be perfectly undone and which is useful in image compression.

DTS – See *decoding time-stamp*.

editing – A process by which one or more compressed bit streams are manipulated to produce a new compressed bit stream. Conforming edited bit streams are understood to meet the requirements defined in the Digital Television Standard.

elementary stream (ES) –A generic term for one of the coded video, coded audio, or other coded bit streams. One elementary stream is carried in a sequence of PES packets with one and only one stream_id.

elementary stream clock reference (ESCR) – A time stamp in the PES stream from which decoders of PES streams may derive timing.

encoder – An embodiment of an encoding process.

encoding (process) – A process that reads a stream of input pictures or audio samples and produces a valid coded bit stream as defined in the Digital Television Standard.

entropy coding – Variable length lossless coding of the digital representation of a signal to reduce redundancy.

entry point – Refers to a point in a coded bit stream after which a decoder can become properly initialized and commence syntactically correct decoding. The first transmitted picture after an entry point is either an I-picture or a P-picture. If the first transmitted picture is not an I-picture, the decoder may produce one or more pictures during acquisition.

ES – See *elementary stream*.

Exhibit 1015
TCL v. Maxell - IPR2025-00134
Page 10 of 136

ESCR – See *elementary stream clock reference*.

event – An event is defined as a collection of elementary streams with a common time base, an associated start time, and an associated end time.

field – For an interlaced video signal, a "field" is the assembly of alternate lines of a frame. Therefore, an interlaced frame is composed of two fields, a top field and a bottom field.

forbidden – This term, when used in clauses defining the coded bit stream, indicates that the value shall never be used. This is usually to avoid emulation of start codes.

frame – A frame contains lines of spatial information of a video signal. For progressive video, these lines contain samples starting from one time instant and continuing through successive lines to the bottom of the frame. For interlaced video a frame consists of two fields, a top field and a bottom field. One of these fields will commence one field later than the other.

GOP – See *group of pictures*.

group of pictures (GOP) – A group of pictures consists of one or more pictures in sequence.

HDTV – See *high-definition television*.

High-definition television (HDTV) – High-definition television has a resolution of approximately twice that of conventional television in both the horizontal (H) and vertical (V) dimensions and a picture aspect ratio (H × V) of 16:9. ITU-R Recommendation 1125 further defines "HDTV quality" as the delivery of a television picture which is subjectively identical with the interlaced HDTV studio standard.

high level – A range of allowed picture parameters defined by the MPEG-2 video coding specification which corresponds to high definition television.

Huffman coding – A type of source coding that uses codes of different lengths to represent symbols which have unequal likelihood of occurrence.

IEC – International Electrotechnical Commission.

intra-coded pictures or **I-pictures** or **I-frames** – Pictures that are coded using information present only in the picture itself and not depending on information from other pictures. I-pictures provide a mechanism for random access into the compressed video data. I-pictures employ transform coding of the pel blocks and provide only moderate compression.

ISO – International Organization for Standardization.

ITU – International Telecommunication Union.

layer – One of the levels in the data hierarchy of the video and system specification.

level – A range of allowed picture parameters and combinations of picture parameters.

macroblock – In the advanced television system, a macroblock consists of four blocks of luminance and one each C_r and C_b block.

main level – A range of allowed picture parameters defined by the MPEG-2 video coding specification with maximum resolution equivalent to ITU-R Recommendation 601.

main profile – A subset of the syntax of the MPEG-2 video coding specification that is expected to be supported over a large range of applications.

Mbps – 1,000,000 bits per second.

motion vector – A pair of numbers which represent the vertical and horizontal displacement of a region of a reference picture for prediction.

Exhibit 1015
TCL v. Maxell - IPR2025-00134
Page 11 of 136

MP@HL – Main profile at high level.

MP@ML – Main profile at main level.

MPEG – Refers to standards developed by the ISO/IEC JTC1/SC29 WG11, *Moving Picture Experts Group.* MPEG may also refer to the Group.

MPEG-2 – Refers to ISO/IEC standards 13818-1 (systems), 13818-2 (video), 13818-3 (Audio), 13818-4 (Compliance).

pack – A pack consists of a pack header followed by zero or more packets. It is a layer in the system coding syntax.

packet data – Contiguous bytes of data from an elementary data stream present in the packet.

packet identifier (PID) – A unique integer value used to associate elementary streams of a program in a single or multi-program transport stream.

packet – A packet consists of a header followed by a number of contiguous bytes from an elementary data stream. It is a layer in the system coding syntax.

padding – A method to adjust the average length of an audio frame in time to the duration of the corresponding PCM samples, by continuously adding a slot to the audio frame.

Part – A Part is an independently-maintainable portion of an ATSC document. It shares a common root document number with other Parts of the document.

payload – Payload refers to the bytes which follow the header byte in a packet. For example, the payload of a transport stream packet includes the PES_packet_header and its PES_packet_data_bytes or pointer_field and PSI sections, or private data. A PES_packet_payload, however, consists only of PES_packet_data_bytes. The transport stream packet header and adaptation fields are not payload.

PCR – See *program clock reference*.

pel – See *pixel*.

PES packet header – The leading fields in a PES packet up to but not including the PES_packet_data_byte fields where the stream is not a padding stream. In the case of a padding stream, the PES packet header is defined as the leading fields in a PES packet up to but not including the padding_byte fields.

PES packet – The data structure used to carry elementary stream data. It consists of a packet header followed by PES packet payload.

PES stream – A PES stream consists of PES packets, all of whose payloads consist of data from a single elementary stream, and all of which have the same stream_id.

PES – An abbreviation for packetized elementary stream.

picture – Source, coded, or reconstructed image data. A source or reconstructed picture consists of three rectangular matrices representing the luminance and two chrominance signals.

PID – See *packet identifier*.

pixel – "Picture element" or "pel." A pixel is a digital sample of the color intensity values of a picture at a single point.

PMT – Program Map Table. The collection of all the TS_program_map_section()s.

predicted pictures or **P-pictures** or **P-frames** – Pictures that are coded with respect to the nearest *previous* I- or P-picture. This technique is termed *forward prediction*. P-pictures

Exhibit 1015
TCL v. Maxell - IPR2025-00134
Page 12 of 136

provide more compression than I-pictures and serve as a reference for future P-pictures or B-pictures. P-pictures can propagate coding errors when P-pictures (or B-pictures) are predicted from prior P-pictures where the prediction is flawed.

presentation time-stamp (PTS) – A field that may be present in a PES packet header that indicates the time that a presentation unit is presented in the system target decoder.

presentation unit (PU) – A decoded audio access unit or a decoded picture.

profile – A defined subset of the syntax specified in the MPEG-2 video coding specification

program clock reference (PCR) – A time stamp in the transport stream from which decoder timing is derived.

program element – A generic term for one of the elementary streams or other data streams that may be included in the program.

program specific information (PSI) – PSI consists of normative data which is necessary for the demultiplexing of transport streams and the successful regeneration of programs.

program – A program is a collection of program elements. Program elements may be elementary streams. Program elements need not have any defined time base; those that do have a common time base and are intended for synchronized presentation.

PSI – See *program specific information*.

PTS – See *presentation time-stamp*.

PU – See *presentation unit*.

quantizer – A processing step which intentionally reduces the precision of DCT coefficients.

random access – The process of beginning to read and decode the coded bit stream at an arbitrary point.

reserved – This term, when used in clauses defining the coded bit stream, indicates that the value may be used in the future for Digital Television Standard extensions. Unless otherwise specified within this Standard, all reserved bits shall be set to "1".

SCR – See *system clock reference*.

scrambling – The alteration of the characteristics of a video, audio, or coded data stream in order to prevent unauthorized reception of the information in a clear form. This alteration is a specified process under the control of a conditional access system.

SDTV – See *standard-definition television*.

slice – A series of consecutive macroblocks.

SMPTE – Society of Motion Picture and Television Engineers.

source stream – A single, non-multiplexed stream of samples before compression coding.

splicing – The concatenation performed on the system level or two different elementary streams. It is understood that the resulting stream must conform totally to the Digital Television Standard.

standard-definition television (SDTV) – This term is used to signify a *digital* television system in which the quality is approximately equivalent to that of NTSC. This equivalent quality may be achieved from pictures sourced at the 4:2:2 level of ITU-R Recommendation 601 and subjected to processing as part of the bit rate compression. The results should be such that

Exhibit 1015
TCL v. Maxell - IPR2025-00134
Page 13 of 136

when judged across a representative sample of program material, subjective equivalence with NTSC is achieved. Also called standard digital television.

start codes – 32-bit codes embedded in the coded bit stream that are unique. They are used for several purposes including identifying some of the layers in the coding syntax. Start codes consist of a 24 bit prefix (0x000001) and an 8 bit stream_id.

STD input buffer – A first-in, first-out buffer at the input of a system target decoder for storage of compressed data from elementary streams before decoding.

STD – See *system target decoder*.

still picture – A coded still picture consists of a video sequence containing exactly one coded picture which is intra-coded. This picture has an associated PTS and the presentation time of succeeding pictures, if any, is later than that of the still picture by at least two picture periods.

system clock reference (SCR) – A time stamp in the program stream from which decoder timing is derived.

system header – The system header is a data structure that carries information summarizing the system characteristics of the Digital Television Standard multiplexed bit stream.

system target decoder (STD) – A hypothetical reference model of a decoding process used to describe the semantics of the Digital Television Standard multiplexed bit stream.

time-stamp – A term that indicates the time of a specific action such as the arrival of a byte or the presentation of a presentation unit.

transport stream packet header – The leading fields in a Transport Stream packet up to and including the continuity_counter field.

variable bit rate – Operation where the bit rate varies with time during the decoding of a compressed bit stream.

VBV – See *video buffering verifier*.

video buffering verifier (VBV) – A hypothetical decoder that is conceptually connected to the output of an encoder. Its purpose is to provide a constraint on the variability of the data rate that an encoder can produce.

video sequence – A video sequence is represented by a sequence header, one or more groups of pictures, and an end_of_sequence code in the data stream.

8 VSB – Vestigial sideband modulation with 8 discrete amplitude levels.

16 VSB – Vestigial sideband modulation with 16 discrete amplitude levels.

3.4 Symbols, Abbreviations, and Mathematical Operators

The symbols, abbreviations, and mathematical operators used to describe the Digital Television Standard are those adopted for use in describing MPEG-2 and are similar to those used in the "C" programming language. However, integer division with truncation and rounding are specifically defined. The bitwise operators are defined assuming two's-complement representation of integers. Numbering and counting loops generally begin from 0.

3.4.1 Arithmetic Operators

+ Addition.

Exhibit 1015
TCL v. Maxell - IPR2025-00134
Page 14 of 136

–	Subtraction (as a binary operator) or negation (as a unary operator).
++	Increment.
- -	Decrement.
* or ×	Multiplication.
^	Power.
/	Integer division with truncation of the result toward 0. For example, 7/4 and –7/–4 are truncated to 1 and –7/4 and 7/–4 are truncated to –1.
//	Integer division with rounding to the nearest integer. Half-integer values are rounded away from 0 unless otherwise specified. For example 3//2 is rounded to 2, and –3//2 is rounded to –2.
DIV	Integer division with truncation of the result towards –∞.
%	Modulus operator. Defined only for positive numbers.
Sign( )	Sign(x) = 1 $x > 0$ = 0 $x == 0$ = –1 $x < 0$
NINT ( )	Nearest integer operator. Returns the nearest integer value to the real-valued argument. Half-integer values are rounded away from 0.
sin	Sine.
cos	Cosine.
exp	Exponential.
√	Square root.
$\log_{10}$	Logarithm to base ten.
$\log_e$	Logarithm to base e.

3.4.2 Logical Operators

||	Logical OR.
&&	Logical AND.
!	Logical NOT.

3.4.3 Relational Operators

>	Greater than.
≥	Greater than or equal to.
<	Less than.
≤	Less than or equal to.
==	Equal to.
!=	Not equal to.
max [,...,]	The maximum value in the argument list.
min [,...,]	The minimum value in the argument list.

Exhibit 1015
TCL v. Maxell - IPR2025-00134
Page 15 of 136

3.4.4 Bitwise Operators

& AND.

| OR.

>> Shift right with sign extension.

>> Shift left with 0 fill.

3.4.5 Assignment

= Assignment operator.

3.4.6 Mnemonics

The following mnemonics are defined to describe the different data types used in the coded bit stream.

bslbf	Bit string, left bit first, where "left" is the order in which bit strings are written in the Standard. Bit strings are written as a string of 1s and 0s within single quote marks, e.g. '1000 0001'. Blanks within a bit string are for ease of reading and have no significance.
uimsbf	Unsigned integer, most significant bit first.

The byte order of multi-byte words is most significant byte first.

3.4.7 Constants

π 3.14159265359...

e 2.71828182845...

3.4.8 Method of Describing Bit Stream Syntax

Each data item in the coded bit stream described below is in bold type. It is described by its name, its length in bits, and a mnemonic for its type and order of transmission.

The action caused by a decoded data element in a bit stream depends on the value of that data element and on data elements previously decoded. The decoding of the data elements and definition of the state variables used in their decoding are described in the clauses containing the semantic description of the syntax. The following constructs are used to express the conditions when data elements are present, and are in normal type.

Note this syntax uses the "C" code convention that a variable or expression evaluating to a non-zero value is equivalent to a condition that is true.

while (condition) {
data_element
. . .
}
	If the condition is true, then the group of data elements occurs next in the data stream. This repeats until the condition is not true.

do {
data_element
. . . }
while (condition)
	The data element always occurs at least once. The data element is repeated until the condition is not true.

if (condition) {
data_element
. . .
}
	If the condition is true, then the first group of data elements occurs next in the data stream.

Exhibit 1015
TCL v. Maxell - IPR2025-00134
Page 16 of 136

else {
data_element
. . .
}
	If the condition is not true, then the second group of data elements occurs next in the data stream.

for (i = 0;i<n;i++) {
data_element
. . .
}
	The group of data elements occurs *n* times. Conditional constructs within the group of data elements may depend on the value of the loop control variable *i*, which is set to zero for the first occurrence, incremented to 1 for the second occurrence, and so forth.

As noted, the group of data elements may contain nested conditional constructs. For compactness, the { } are omitted when only one data element follows.

data_element [ ]	data_element [ ] is an array of data. The number of data elements is indicated by the context.
data_element [n]	data_element [n] is the n+1th element of an array of data.
data_element [m] [n]	data_element [m] [n] is the m+1,n+1 th element of a two-dimensional array of data.
data_element [l] [m] [n]	data_element [l] [m] [n] is the l+1,m+1,n+1 th element of a three-dimensional array of data.
data_element [m..n]	data_element [m..n] is the inclusive range of bits between bit m and bit n in the data_element.

Decoders must include a means to look for start codes and sync bytes (transport stream) in order to begin decoding correctly, and to identify errors, erasures or insertions while decoding. The methods to identify these situations, and the actions to be taken, are not standardized.

3.4.8.1 Definition of bytealigned Function

The function bytealigned( ) returns 1 if the current position is on a byte boundary; that is, the next bit in the bit stream is the first bit in a byte. Otherwise it returns 0.

3.4.8.2 Definition of nextbits Function

The function nextbits( ) permits comparison of a bit string with the next bits to be decoded in the bit stream.

3.4.8.3 Definition of next_start_code Function

The next_start_code( ) function removes any zero bit and zero byte stuffing and locates the next start code.

This function checks whether the current position is byte-aligned. If it is not, 0 stuffing bits are present. After that any number of 0 bytes may be present before the start-code. Therefore start-codes are always byte-aligned and may be preceded by any number of 0 stuffing bits.

Table 3.1 Next Start Code

Syntax	No. of Bits	Format
next_start_code() {		
while(!bytealigned())		
zero_bit	1	‘0’
while(nextbits()!=‘0000 0000 0000 0000 0000 0001’)		
zero_byte	8	‘00000000’
}		

Exhibit 1015
TCL v. Maxell - IPR2025-00134
Page 17 of 136

4. SPECIFICATION AND CONSTRAINTS (NORMATIVE)

4.1 ATSC System Definition

The Parts referenced below consider the characteristics of the subsystems necessary to accommodate the services envisioned.

The Physical layer shall be as defined in Part 2 [1].

The Transport Layer shall be as defined in Part 3 [2].

The Video encodings shall be as defined in Part 4 [3].

The Audio encodings shall be as defined in Part 5 [4] or in Part 6 [5].

The Parts contain the required elements and some optional elements. Additional ATSC standards may define other required[1] and/or optional[2] elements.

4.2 Digital Television Services

Digital television services are defined and signaled in the transport. The currently defined Service Types are listed in Table 4.1.

The Service Types are identified with a field named service_type which has a length of 6 bits, ordered as bit serial, most significant bit first. Some Service Types and associated values are indicated in Table 4.1. Other parts of this Standard and other Standards may use this field and define Service Types (and the associated service_type value). The ATSC Code Points Registry [13] contains a complete list.

Table 4.1 Service Types

service_type	Meaning
0x00	[Reserved]
0x01	Analog Television
0x02	ATSC Digital Television
0x03	ATSC Audio
0x04	ATSC Data Only Service
0x05	ATSC Software Download Service
0x06-0x3F	[Reserved – see ATSC Code Points Registry[3]]

Note: For service_type values 0x04 and 0x05, please see [10] and [11] respectively.

5. SYSTEM OVERVIEW (INFORMATIVE)

The Digital Television Standard describes a system designed to transmit high quality video and audio and ancillary data over a single 6 MHz channel. The system can deliver reliably about 19 Mbps of throughput in a 6 MHz terrestrial broadcasting channel and about 38 Mbps of throughput in a 6 MHz cable television channel. This means that encoding a video source whose

[1] See A/65 [9].

[2] See A/110 [12].

[3] See the ATSC "Code Point Registry" [13] for a complete list.

Exhibit 1015
TCL v. Maxell - IPR2025-00134
Page 18 of 136

resolution can be as high as five times that of conventional television (NTSC) resolution requires a bit rate reduction by a factor of 50 or higher. To achieve this bit rate reduction, the system is designed to be efficient in utilizing available channel capacity by exploiting complex video and audio compression technology.

The objective is to maximize the information passed through the data channel by minimizing the amount of data required to represent the video image sequence and its associated audio. The objective is to represent the video, audio, and data sources with as few bits as possible while preserving the level of quality required for the given application.

Although the RF/transmission subsystems described in this Standard are designed specifically for terrestrial and cable applications, the objective is that the video, audio, and service multiplex/transport subsystems be useful in other applications.

5.1 System Block Diagram

A basic block diagram representation of the system is shown in Figure 5.1. According to this model, the digital television system can be seen to consist of three subsystems.

- Source coding and compression
- Service multiplex and transport
- RF/transmission

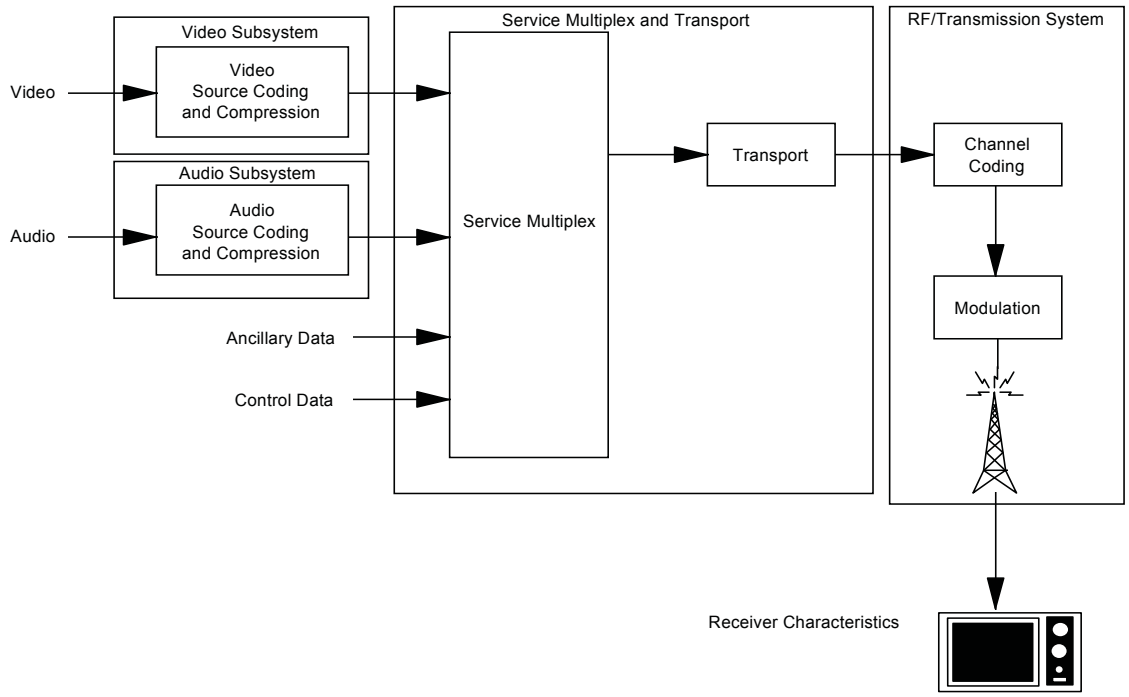

Figure 5.1 ITU-R digital terrestrial television broadcasting model.

"Source coding and compression" refers to the bit rate reduction methods, also known as data compression, appropriate for application to the video, audio, and ancillary digital data streams. The term "ancillary data" includes control data, conditional access control data, and

Exhibit 1015
TCL v. Maxell - IPR2025-00134
Page 19 of 136

data associated with the program audio and video services, such as closed captioning. "Ancillary data" can also refer to independent program services. The purpose of the coder is to minimize the number of bits needed to represent the audio and video information. The digital television system employs the MPEG-2 video stream syntax for the coding of video and the Digital Audio Compression (AC-3) Standard for the coding of audio.

"Service multiplex and transport" refers to the means of dividing the digital data stream into "packets" of information, the means of uniquely identifying each packet or packet type, and the appropriate methods of multiplexing video data stream packets, audio data stream packets, and ancillary data stream packets into a single data stream. In developing the transport mechanism, interoperability among digital media, such as terrestrial broadcasting, cable distribution, satellite distribution, recording media, and computer interfaces, was a prime consideration. The digital television system employs the MPEG-2 transport stream syntax for the packetization and multiplexing of video, audio, and data signals for digital broadcasting systems (ISO/IEC 13818-1) [14]. The MPEG-2 transport stream syntax was developed for applications where channel bandwidth or recording media capacity is limited and the requirement for an efficient transport mechanism is paramount. It was designed also to facilitate interoperability with the ATM transport mechanism.

"RF/transmission" refers to channel coding and modulation. The channel coder takes the data bit stream and adds additional information that can be used by the receiver to reconstruct the data from the received signal which, due to transmission impairments, may not accurately represent the transmitted signal. The modulation (or physical layer) uses the digital data stream information to modulate the transmitted signal. The modulation subsystem offers two modes: a terrestrial broadcast mode (8-VSB), and a high data rate mode (16-VSB).

There are two subsystems within the system where a set of frequencies are related, the source coding subsystem and the channel coding (RF/transmission) subsystem. Those requirements are detailed in their respective Parts. The source coding clock and the symbol clock are not required to be frequency-locked to each other, and in many implementations will operate asynchronously. In such systems, the frequency drift can necessitate the occasional insertion or deletion of a null packet from within the transport stream, thereby accommodating the frequency disparity.

Exhibit 1015
TCL v. Maxell - IPR2025-00134
Page 20 of 136

Annex A:
Historical Background (Informative)

1. FOREWORD

This Annex contains for historical reasons the background section that was originally published in A/53 on 16 December 1995.

2. HISTORICAL BACKGROUND

The Advanced Television Systems Committee, chaired by James C. McKinney, was formed by the member organizations of the Joint Committee on InterSociety Coordination (JCIC)[4] for the purpose of exploring the need for and, where appropriate, to coordinate development of the documentation of Advanced Television Systems. Documentation is understood to include voluntary technical standards, recommended practices, and engineering guidelines.

Proposed documentation may be developed by the ATSC, by member organizations of the JCIC, or by existing standards committees. The ATSC was established recognizing that the prompt, efficient and effective development of a coordinated set of national standards is essential to the future development of domestic television services.

On June 5, 1992, ATSC provided information to the Federal Communications Commission (FCC) outlining proposed industry actions to fully document the advanced television system standard. The FCC has recognized the importance of prompt disclosure of the system technical specifications to the mass production of advanced television system professional and consumer equipment in a timely fashion. The FCC has further noted its appreciation of the diligence with which the ATSC and the other groups participating in the standardization are pursuing these matters.[5]

Supporting this activity, the ATSC Executive Committee requested that the T3[6]/S1 Specialist Group on Macro Systems Approach meet and suggest which portions of an advanced television system broadcasting standard might require action by the FCC and which portions should be voluntary.

Subsequently, T3/S1 held meetings and developed recommendations in two areas:

1) Principles upon which documentation of the advanced television system should be based
2) A list of characteristics of an advanced television system that should be documented

[4] The JCIC is presently composed of: the Consumer Electronics Association (CEA), the Institute of Electrical and Electronics Engineers (IEEE), the National Association of Broadcasters (NAB), the National Cable Television Association (NCTA), and the Society of Motion Picture and Television Engineers (SMPTE).

[5] FCC 92-438, MM Docket No. 87-268, "Memorandum Opinion and Order/Third Report and Order/Third Further Notice of Proposed Rule Making," Adopted: September 17, 1992, pp. 59–60.

[6] T3 is now known as TSG (Technology and Standards Group).

Exhibit 1015
TCL v. Maxell - IPR2025-00134
Page 21 of 136

The list tentatively identified the industry group(s) that would provide the documentation information and the document where the information would likely appear.

The recommendations developed by the T3/S1 Specialist Group were modified by T3 to accommodate information and knowledge about advanced television systems developed in the period since June 1992. Some of the modifications to the recommendations ensued from the formation of the Grand Alliance. The modified guidelines were approved at the March 31, 1994, meeting of the T3 Technology Group on Distribution and are described in Section 4.4.

2.1 Advisory Committee on Advanced Television Service (ACATS)

A "Petition for Notice of Inquiry" was filed with the FCC on February 21, 1987, by 58 broadcasting organizations and companies requesting that the Commission initiate a proceeding to explore the issues arising from the introduction of advanced television technologies and their possible impact on the television broadcasting service. At that time, it was generally believed that high-definition television (HDTV) could not be broadcast using 6 MHz terrestrial broadcasting channels. The broadcasting organizations were concerned that alternative media would be able to deliver HDTV to the viewing public, placing terrestrial broadcasting at a severe disadvantage.

The FCC agreed that this was a subject of utmost importance and initiated a proceeding (MM Docket No. 87-268) to consider the technical and public policy issues of advanced television systems. The Advisory Committee on Advanced Television Service was empaneled by the Federal Communications Commission in 1987, with Richard E. Wiley as chairman, to develop information that would assist the FCC in establishing an advanced television standard for the United States. The objective given to the Advisory Committee in its Charter by the FCC was:

> "The Committee will advise the Federal Communications Commission on the facts and circumstances regarding advanced television systems for Commission consideration of technical and public policy issues. In the event that the Commission decides that adoption of some form of advanced broadcast television is in the public interest, the Committee would also recommend policies, standards, and regulations that would facilitate the orderly and timely introduction of advanced television services in the United States."

The Advisory Committee established a series of subgroups to study the various issues concerning services, technical parameters, and testing mechanisms required to establish an advanced television system standard. The Advisory Committee also established a system evaluation, test, and analysis process that began with over twenty proposed systems, reducing them to four final systems for consideration.

2.2 Digital HDTV Grand Alliance (Grand Alliance)

On May 24, 1993, the three groups that had developed the four final digital systems agreed to produce a single, best-of-the best system to propose as the standard. The three groups (AT&T and Zenith Electronics Corporation; General Instrument Corporation and the Massachusetts Institute of Technology; and Philips Consumer Electronics, Thomson Consumer Electronics, and the David Sarnoff Research Center) have been working together as the "Digital HDTV Grand

Exhibit 1015
TCL v. Maxell - IPR2025-00134
Page 22 of 136

Alliance." The system described in this Standard is based on the Digital HDTV Grand Alliance proposal to the Advisory Committee.

2.3 Organization for Documenting the Digital Television Standard

The ATSC Executive Committee assigned the work of documenting the advanced television system standards to T3 specialist groups, dividing the work into five areas of interest:

- Video, including input signal format and source coding
- Audio, including input signal format and source coding
- Transport, including data multiplex and channel coding
- RF/Transmission, including the modulation subsystem
- Receiver characteristics

A steering committee consisting of the chairs of the five specialist groups, the chair and vice-chairs of T3, and liaison among the ATSC, the FCC, and ACATS was established to coordinate the development of the documents. The members of the steering committee and areas of interest were as follows:

- Stanley Baron — T3 chair
- Jules Cohen — T3 vice-chair
- Brian James — T3 vice-chair
- Larry Pearlstein — T3/S6 (video systems characteristics), chair
- Graham S. Stubbs — T3/S7 (audio systems characteristics), chair
- Bernard J. Lechner — T3/S8 (service multiplex/transport systems characteristics), chair
- Lynn D. Claudy — T3/S9 (RF/transmission systems characteristics), chair
- Werner F. Wedam — T3/S10 (receiver characteristics), chair
- Robert M. Rast — Grand Alliance facilitator
- Robert Hopkins — ATSC
- Robert M. Bromery — FCC Office of Engineering and Technology
- Gordon Godfrey — FCC Mass Media Bureau
- Paul E. Misener — ACATS

2.4 Principles for Documenting the Digital Television Standard

T3 adopted the following principles for documenting the advanced television system standard:

1) The Grand Alliance was recognized as the principal supplier of information for documenting the advanced television system, supported by the ATSC and others. Other organizations seen as suppliers of information were EIA, FCC, IEEE, MPEG, NCTA, and SMPTE.
2) The Grand Alliance was encouraged to begin drafting the essential elements of system details as soon as possible to avoid delays in producing the advanced television system documentation.
3) FCC requirements for the advanced television system standard were to be obtained as soon as possible.

Exhibit 1015
TCL v. Maxell - IPR2025-00134
Page 23 of 136

4) Complete functional system details (permitting those skilled in the art to construct a working system) were to be made publicly available.
5) Protection of any intellectual property made public must be by patent or copyright as appropriate.
6) The advanced television system documentation shall include the necessary system information such that audio and video encoders may be manufactured to deliver the system's full demonstrated performance quality.
7) The advanced television system documentation shall point to existing standards, recommended practices, or guideline documents. These documents shall be referenced in one of two ways as deemed appropriate for the application. In the first instance, a specific revision shall be specified where review of changes to the referenced document is required before changes might be incorporated into the advanced television system document. The second instance references the document without specificity to revision and allows any changes to the referenced documents to be automatically incorporated.
8) System specifications shall explain how future, compatible improvements may be achieved.
9) As ongoing improvements take place in the advanced television system, manufacturers of encoders and decoders should coordinate their efforts to insure compatibility.
10) The advanced television system standard must support backward compatibility of future improvements with all generations of advanced television system receivers and inherently support production of low cost receivers (not withstanding that cost reduction through reduced performance quality may also be used to achieve inexpensive products).
11) The advanced television system standard should not foreclose flexibility in implementing advanced television system receivers at different price and performance levels.
12) The advanced television system standard should not foreclose flexibility in implementing program services or in data stream modification or insertion of data packets by downstream (local) service providers.
13) The advanced television system documentation shall address interoperability with non-broadcast delivery systems including cable.

The advanced television system standard shall identify critical system parameters and shall provide information as to the range of acceptable values, the method of measurement, and the location in the system where measurement takes place.

End of Part 1

Exhibit 1015
TCL v. Maxell - IPR2025-00134
Page 24 of 136

Doc. A/53, Part 2:2007
3 January 2007

ATSC Digital Television Standard
Part 2 – RF/Transmission System Characteristics
(A/53, Part 2:2007)

Advanced Television Systems Committee
1750 K Street, N.W.
Suite 1200
Washington, D.C. 20006
www.atsc.org

Exhibit 1015
TCL v. Maxell - IPR2025-00134
Page 25 of 136

The Advanced Television Systems Committee, Inc., is an international, non-profit organization developing voluntary standards for digital television. The ATSC member organizations represent the broadcast, broadcast equipment, motion picture, consumer electronics, computer, cable, satellite, and semiconductor industries.

Specifically, ATSC is working to coordinate television standards among different communications media focusing on digital television, interactive systems, and broadband multimedia communications. ATSC is also developing digital television implementation strategies and presenting educational seminars on the ATSC standards.

ATSC was formed in 1982 by the member organizations of the Joint Committee on InterSociety Coordination (JCIC): the Electronic Industries Association (EIA), the Institute of Electrical and Electronic Engineers (IEEE), the National Association of Broadcasters (NAB), the National Cable Television Association (NCTA), and the Society of Motion Picture and Television Engineers (SMPTE). Currently, there are approximately 140 members representing the broadcast, broadcast equipment, motion picture, consumer electronics, computer, cable, satellite, and semiconductor industries.

ATSC Digital TV Standards include digital high definition television (HDTV), standard definition television (SDTV), data broadcasting, multichannel surround-sound audio, and satellite direct-to-home broadcasting.

Exhibit 1015
TCL v. Maxell - IPR2025-00134
Page 26 of 136

Table of Contents

1. SCOPE 6

2. REFERENCES 6

2.1 Normative References 6

2.2 Informative References 6

3. COMPLIANCE NOTATION 7

3.1 Treatment of Syntactic Elements 7

3.2 Symbols, Abbreviations, and Mathematical Operators 7

4. ABBREVIATIONS 7

5. SYSTEM OVERVIEW (INFORMATIVE) 7

6. TRANSMISSION CHARACTERISTICS FOR TERRESTRIAL BROADCAST 8

6.1 Overview of Main Service 8

6.2 Overview of Main and Enhanced Service 9

6.3 Data Organization 10

6.4 Channel Error Protection 12

6.4.1 Main Service Data Error Detection and Correction Facility 13

6.4.1.1 Main Service Data Randomizer 13

6.4.1.2 Main Service Reed-Solomon Encoder 13

6.4.1.3 Main Service Interleaving 14

6.4.1.4 Main Service Trellis Coding 15

6.4.2 Main and Enhanced Service Data Error Detection and Correction Facilities 19

6.4.2.1 Enhanced Data Protection 19

6.4.2.1.1 E8-VSB Pre-Processor 20

6.4.2.2 Data Randomizer 23

6.4.2.3 Reed Solomon Encoder 23

6.4.2.4 Data Interleaver 23

6.4.2.5 E8-VSB Convolutional Coder 24

6.4.2.5.1 Enhanced Symbol Processor 24

6.4.2.5.2 Precode Bypass 25

6.4.2.6 Data Byte De-Interleaver 25

6.4.2.7 RS Byte Delete and De-Randomizer 26

6.5 Synchronization 26

6.5.1 Data Segment Sync 26

6.5.2 Data Field Sync 26

6.5.2.1 Definition of the PN511 Sequence 27

6.5.2.2 Definition of the PN63 Sequence 27

6.5.2.3 VSB Mode Bits 28

6.5.2.4 Reserved 29

Exhibit 1015
TCL v. Maxell - IPR2025-00134
Page 27 of 136

6.5.2.5 Precode 29
6.5.2.6 Enhancement Signaling 29
6.6 Enhanced Mode Data Rates 29
6.6.1 Enhanced Stream Rate Limits 30
6.7 Enhanced Mode Map Bits 34
6.7.1 Map to Frame Count to Frame Association 35
6.7.2 Generation of Length of 64 Kerdock Codeword 36
6.7.3 Encoding Procedure 37
6.8 Enhanced Data Packing Structure 37
6.8.1 Placement of Enhanced Mode Packets 38
6.8.2 Packing of Enhanced Mode Data Within Packets 39
6.8.3 E-8VSB Enhancement Signaling 40
6.9 Modulation 40
6.9.1 Bit-to-Symbol Mapping 40
6.9.2 Pilot Addition 40
6.9.3 8 VSB Modulation Method 41
7. TRANSMISSION CHARACTERISTICS FOR HIGH DATA RATE MODE.....41
7.1 Overview 41
7.2 Channel Error Protection and Synchronization 43
7.2.1 Data Randomizer 43
7.2.2 Reed-Solomon Encoder 43
7.2.3 Interleaving 43
7.2.4 Data Segment Sync 43
7.2.5 Data Field Sync 43
7.3 Modulation 43
7.3.1 Bit-to-Symbol Mapping 43
7.3.2 Pilot Addition 44
7.3.3 16 VSB Modulation Method 44

Exhibit 1015
TCL v. Maxell - IPR2025-00134
Page 28 of 136

Index of Tables and Figures

Table 6.1 Interleaving Sequence 17
Table 6.2 Byte to Symbol Conversion, Multiplexing of Trellis Encoders 18
Table 6.3 Steps vs. Map Address 31
Table 6.4*a* Segments and Payload vs. Step Number- one-half Rate 33
Table 6.4*b* Segments and Payload vs. Step Number- one-fourth Rate 34
Table 6.5 Map Change Sequence 36
Table 6.6 Enhanced Data Encapsulation 40

Figure 5.1 ITU-R digital terrestrial television broadcasting model. 8
Figure 6.1 Main Service functional block diagram. 9
Figure 6.2 Main and Enhanced Service functional block diagram. 9
Figure 6.3 VSB data frame without extra field sync. 12
Figure 6.4 VSB channel occupancy (nominal). 12
Figure 6.5 Randomizer polynomial. 13
Figure 6.6 Reed-Solomon (207,187) t=10 parity generator polynomial. 14
Figure 6.7 Convolutional interleaver (byte shift register illustration). 15
Figure 6.8 Main Service trellis encoder, precoder, and symbol mapper. 16
Figure 6.9 Trellis code interleaver. 17
Figure 6.10 Main and Enhanced Mux Packet Processor. 20
Figure 6.11 E8-VSB pre-processor. 23
Figure 6.12 E8-VSB convolutional coder (12-way interleave/de-interleave). 24
Figure 6.13 Enhanced Symbol Processor. 25
Figure 6.14 8-VSB data segment. 26
Figure 6.15 VSB data field sync. 27
Figure 6.16 Field sync PN sequence generators. 28
Figure 6.17 Nominal VSB system channel response (linear phase raised cosine Nyquist filter). 41
Figure 7.1 16-VSB data segment. 42
Figure 7.2 16-VSB transmitter. 42
Figure 7.3 16-VSB mapper. 43

Exhibit 1015
TCL v. Maxell - IPR2025-00134
Page 29 of 136

ATSC Digital Television Standard – Part 2: RF/Transmission System Characteristics

1. SCOPE

This Part describes the characteristics of the RF/Transmission subsystem, which is referred to as the VSB subsystem, of the Digital Television Standard. The VSB subsystem offers two major modulation methods: a terrestrial broadcast method (8-VSB), and a high data rate method (16-VSB). These are described in separate sections of this document.

The 8-VSB modulation method is further defined by a set of required elements and various combinations of optional elements. The set of required elements is called the Main mode. Main service data is protected by the 'Main' Forward Error Correction (FEC) system and is sent using mandatory training sequences.

The optional enhancements add additional forward error correction coding layers to the data before sending the data via a constrained version of 8-VSB called Enhanced 8-VSB (E8-VSB). Various coding rate options are defined, and the payload assignment between the Enhanced 8-VSB and the Main Mode data is selectable at discretely defined values.

These Modes shall only be used in the defined combinations.

Accordingly, the 8-VSB transmission system offers optional sub-modes of operation that trade-off data rate for performance. The optional modes facilitate receiver operation in certain propagation conditions, with the degree of additional enhancements selected by the broadcaster with an acceptance of a reduction in the payload of the Main Service. The optional modes are designed to avoid impact on any remaining payload in the Main Service.

2. REFERENCES

At the time of publication, the editions indicated were valid. All standards are subject to revision and amendment, and parties to agreements based on this standard are encouraged to investigate the possibility of applying the most recent editions of the documents listed below.

2.1 Normative References

The following documents contain provisions that in whole or in part, through reference in this text, constitute provisions of this standard.

[1] ISO: "ISO/IEC IS 13818-1:1 2000 (E), International Standard: Information technology – Generic coding of moving pictures and associated audio information: systems."

2.2 Informative References

[2] ATSC: "Synchronization Standard for Distributed Transmission," Doc. A/110A, Advanced Television Systems Committee, Washington, D.C., 14 July 2004.

[3] SMPTE: "Synchronous Serial Interface for MPEG-2 Digital Transport Stream," Doc. SMPTE 310M (1998), Society of Motion Picture and Television Engineers, White Plains, N.Y., 1998.

[4] ATSC: "Digital Television Standard, Part 3 – Service Multiplex and Transport Subsystem Characteristics," Doc. A/53, Part 3:2007, Advanced Television Systems Committee, Washington, D.C., 3 January 2007.

Exhibit 1015
TCL v. Maxell - IPR2025-00134
Page 30 of 136

[5] ATSC: "Digital Television Standard, Part 1 – Digital Television System," Doc. A/53, Part 1:2007, Advanced Television Systems Committee, Washington, D.C., 3 January 2007.

3. COMPLIANCE NOTATION

As used in this document, "shall" denotes a mandatory provision of the standard. "Should" denotes a provision that is recommended but not mandatory. "May" denotes a feature whose presence does not preclude compliance that may or may not be present at the option of the implementer.

3.1 Treatment of Syntactic Elements

This document contains symbolic references to syntactic elements used in the audio, video, and transport coding subsystems. These references are typographically distinguished by the use of a different font (e.g., restricted), may contain the underscore character (e.g., sequence_end_code) and may consist of character strings that are not English words (e.g., dynrng).

3.2 Symbols, Abbreviations, and Mathematical Operators

The symbols, abbreviations, and mathematical operators used herein are as found in Section 3.4 of ATSC A/53 Part 1 [5].

4. ABBREVIATIONS

FEC – forward error correction

MPEG – Moving Pictures Experts Group

MUX – multiplexer

PCR – Program Clock Reference

RS – Reed-Solomon (error correction coding)

VSB – vestigial sideband modulation

5. SYSTEM OVERVIEW (INFORMATIVE)

A basic block diagram representation of the system is shown in Figure 5.1. According to this model, the digital television system can be seen to consist of three subsystems.

- Source coding and compression
- Service multiplex and transport
- RF/transmission

Exhibit 1015
TCL v. Maxell - IPR2025-00134
Page 31 of 136

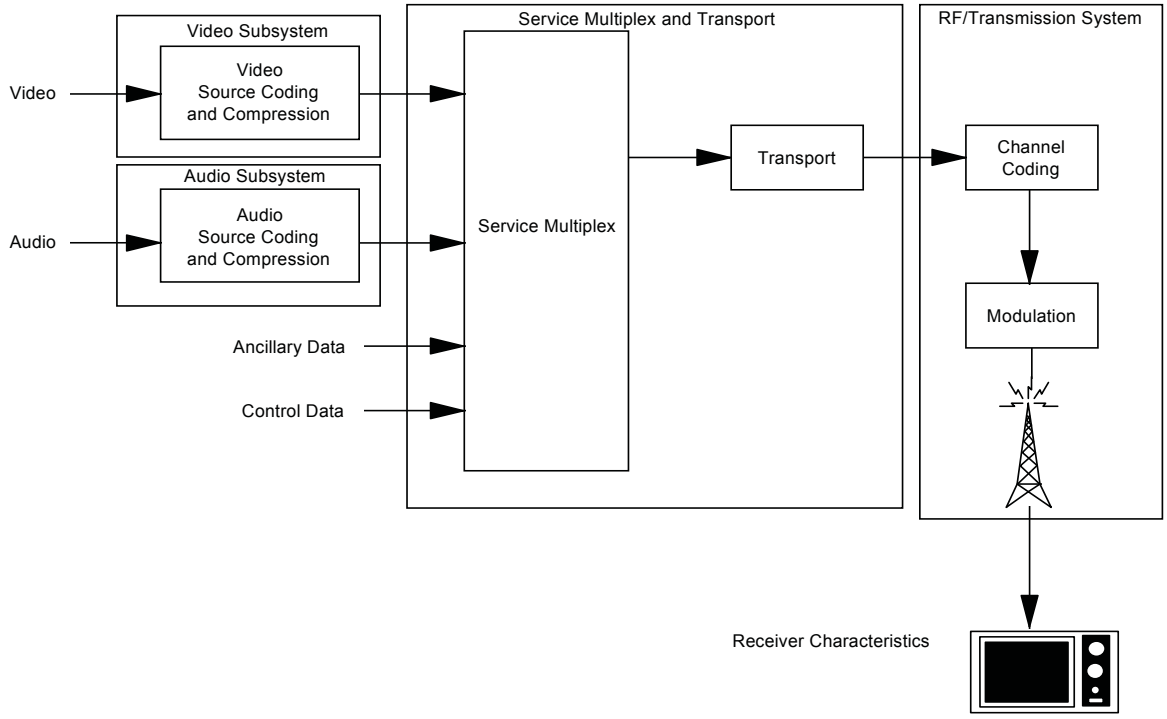

Figure 5.1 ITU-R digital terrestrial television broadcasting model.

This Part documents the requirements for the block labeled "RF/Transmission System" shown in Figure 5.1.

6. TRANSMISSION CHARACTERISTICS FOR TERRESTRIAL BROADCAST

The terrestrial broadcast mode (known as 8-VSB) delivers an MPEG-2 Transport Stream (MPEG-2-TS) of up to 19.39 Mbps in a 6 MHz channel. Two optional modes use higher order data coding, called Enhanced 8-VSB. Enhanced data modes allow the broadcaster to allocate a portion of the base 19.39 Mbps data rate to Enhanced data transmission. Enhanced data is designed to have higher immunity to certain channel impairments than the Main Service but delivers data at a reduced information rate selected by the broadcaster from the specified options.

6.1 Overview of Main Service

See Figure 6.1[1] for the functional block diagram of the Main Service alone. Incoming data is randomized and then processed for forward error correction (FEC) in the form of Reed-Solomon (RS) coding (20 RS parity bytes are added to each MPEG-2 packet), one-sixth data field interleaving and two-thirds rate trellis coding. The randomization and FEC processes are not applied to the sync byte of the transport packet, which is represented in transmission by a Data Segment Sync signal as described below. Following randomization and forward error correction

[1] Note that the optional pre-equalizer and RF up-converter blocks are implementation dependent and not addressed in this Part.

Exhibit 1015
TCL v. Maxell - IPR2025-00134
Page 32 of 136

processing, the data packets are formatted into Data Frames for transmission and Data Segment Sync and Data Field Sync are added.

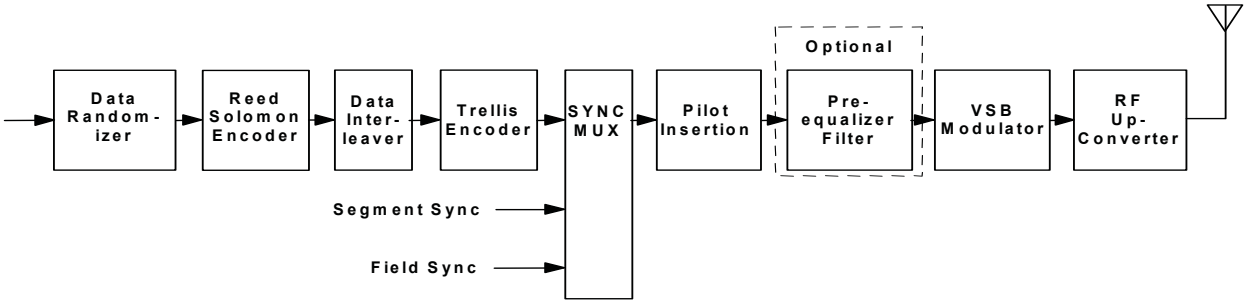

Figure 6.1 Main Service functional block diagram.

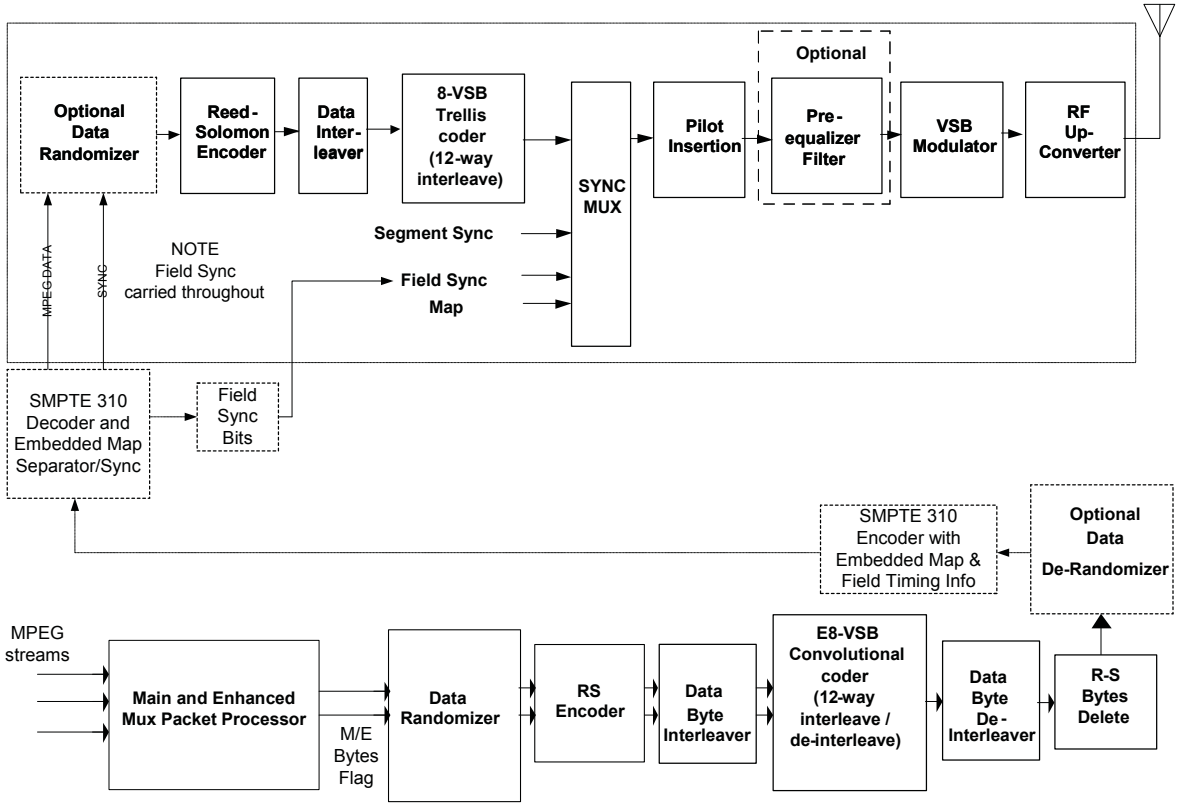

Figure 6.2 Main and Enhanced Service functional block diagram.

6.2 Overview of Main and Enhanced Service

See Figure 6.2 for Enhanced mode alternative functional block diagrams of the 8-VSB transmitter. Transmitting Enhanced 8-VSB (E8-VSB) requires processing as shown in Figure 6.2, Figure 6.10, Figure 6.11, Figure 6.12, and Figure 6.13. The upper row of Figure 6.2 consists of blocks that are common to the transmission of Enhanced streams (containing both Enhanced and Main data) and to the transmission of Main-only streams. The lower two rows contain blocks that are required for Enhanced transmission. Blocks in Figure 6.2 that are optional but

Exhibit 1015
TCL v. Maxell - IPR2025-00134
Page 33 of 136

that may be used to facilitate particular implementations will be called out in the following discussion.

MPEG-2 streams for Main and Enhanced processing are received at the input (lower left of Figure 6.2). Appropriate buffering for intra-data-field multiplexing is inserted on both the Main and the Enhanced MPEG-2 streams. Enhanced data is sent through the Main and Enhanced Mux Packet Processor as shown. Details of this block are given in Section 6.4.2 1, Figure 6.10 and Figure 6.11. Enhanced data shall be expanded by the ratio of 1:2 (for one-half rate coding) or 1:4 (for one-quarter rate coding) to form place-holder bits for the Enhanced convolutional coding and shall be formatted in MPEG-2 packets that shall be multiplexed with packets from the Main MPEG-2 stream. The order of multiplexing is determined according to the placement of Enhanced data segments in the transmitted data field (see Sections 6.4.2.1.1 and 6.8 below).

All packets and an associated Main/Enhanced flag bit sequence (which indicates whether or not a specific byte is from a Main Service packet) shall pass through a data randomizer, RS encoder, and byte interleaver that are identical to the ones used for Main-data-only transmission. The data shall then be processed by an E8-VSB convolutional trellis coder, which shall have two modes of operation for the Enhanced and Main data respectively, controlled by the Main/Enhanced (M/E) flag.

The Enhanced convolutional processing, as specified below, shall result in replacement of the placeholder bits in the expanded Enhanced stream packets (including the additional RS FEC data). The symbols at the output of the E8-VSB convolutional coder shall be de-interleaved at the 12:1 trellis level and then at the byte level. The output of this stage is groups of bytes with appended erroneous RS coded parity bytes, due to changes in the symbol data produced by the E8-VSB convolutional trellis coder. The erroneous RS coded parity bytes shall be deleted and replaced by correct bytes generated by the following RS encoder (top row of Figure 6.2). A data de-randomizer /randomizer pair may be inserted at this point to reformulate packets that are transmitted by a SMPTE 310 link.

In case the upper and lower rows of processing in Figure 6.2 are physically separated (as by a SMPTE 310 link [3]), means will be required to transmit the map data and the field sync timing across that link from the multiplexer (lower left of Figure 6.2) to the insertion mux (upper row of Figure 6.2). One such method is covered in ATSC Standard A/110 [2]. If the SMPTE 310 link is used, then the embedded map and synchronization information is decoded and is sent to the transmitter functional blocks as shown in the upper row of Figure 6.2. Data to signal the placement of Enhanced data segments within the data field ("map data") shall be transmitted during the data field sync segment, as described below (see Section 6.7).

6.3 Data Organization

Figure 6.3 shows how the data are organized for transmission. Each Data Frame consists of two Data Fields, each containing 313 Data Segments. The first Data Segment of each Data Field is a unique synchronizing signal (Data Field Sync) and includes the training sequence used by the equalizer in the receiver. The remaining 312 Data Segments each carry the equivalent of the data from one 188-byte transport packet plus its associated RS-FEC overhead. The actual data in each Data Segment comes from several transport packets because of data interleaving. In the case of E8-VSB transmission, the Enhanced-coded 8-level symbols are dispersed among the normal 8-level symbols due to additional interleaving of Enhanced coding. Each Data Segment consists of 832 symbols. The first 4 symbols are transmitted in binary form and provide segment

Exhibit 1015
TCL v. Maxell - IPR2025-00134
Page 34 of 136

synchronization. This Data Segment Sync signal also represents the sync byte of the 188-byte MPEG-2-compatible transport packet[2]. The remaining 828 symbols of each Data Segment carry data equivalent to the remaining 187 bytes of a transport packet and its associated RS-FEC overhead. These 828 symbols are transmitted as 8-level signals and therefore carry three bits per symbol. Thus, 828 x 3 = 2484 bits of data are carried in each Data Segment, which exactly matches the requirement to send a protected transport packet:

187 data bytes + 20 RS parity bytes = 207 bytes

207 bytes x 8 bits/byte = 1656 bits

Two-thirds rate trellis coding requires 3/2 x 1656 bits = 2484 bits.

The exact symbol rate is given by Equation 1 below:

(1) S_r (MHz) = 4.5/286 x 684 = 10.76... MHz

The frequency of a Data Segment is given in Equation 2 below:

(2) fseg= S_r / 832 = 12.94... X 10^3 Data Segments/s.

The Data Frame rate is given by Equation (3) below:

(3) $f_{frame} = f_{seg}/626$ = 20.66 ... frames/s.

The symbol rate S_r and the transport rate T_r[3] shall be locked to each other in frequency.

[2] Note that E8-VSB data includes additional RS coding and additional trellis coding. The ratio of expansion due to this additional coding is 1:2 or 1:4 for Rate one-half or one-fourth, respectively. Due to this expansion, an MPEG-2 packet that is input to the enhanced stream extends over a non-integral multiple of normal segments before being dispersed by interleaving. The Data Segment Sync represents the MPEG-2 sync byte of the encapsulating transport stream.

[3] As described in Part 3 of A/53[4] Section 8.2.

Exhibit 1015
TCL v. Maxell - IPR2025-00134
Page 35 of 136

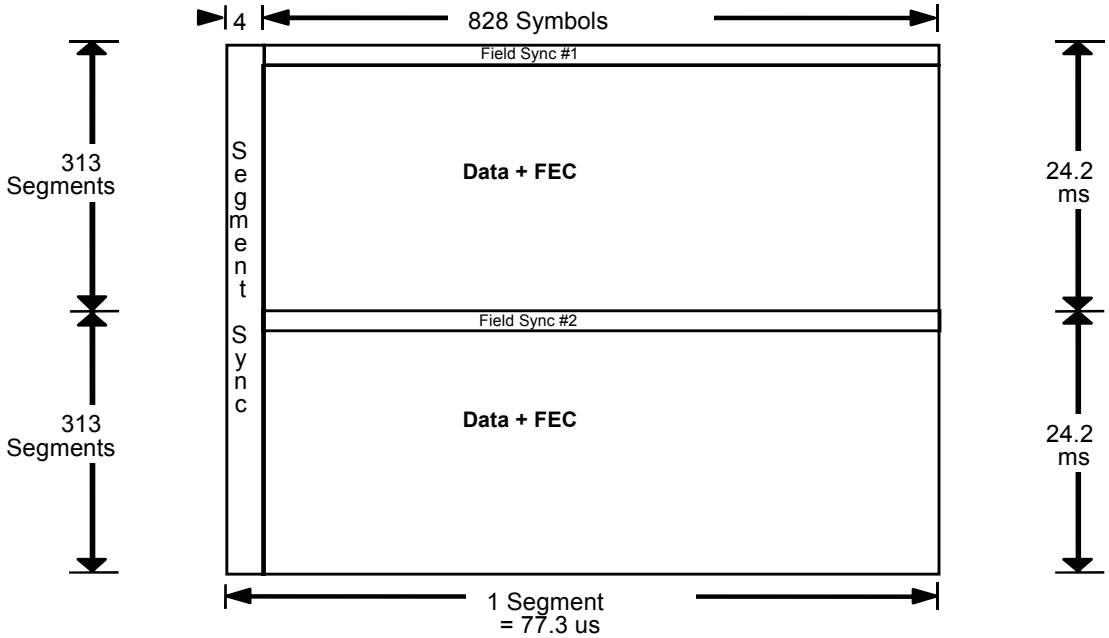

Figure 6.3 VSB data frame without extra field sync.

The 8-level symbols combined with the binary Data Segment Sync and Data Field Sync signals shall be used to suppressed-carrier modulate a single carrier. Before transmission, however, most of the lower sideband shall be removed. The resulting spectrum is flat, except for the band edges where a nominal square root raised cosine response results in 620 kHz transition regions. The nominal VSB transmission spectrum is shown in Figure 6.4.

At the suppressed-carrier frequency, 310 kHz from the nominal lower band edge, a small pilot shall be added to the signal.

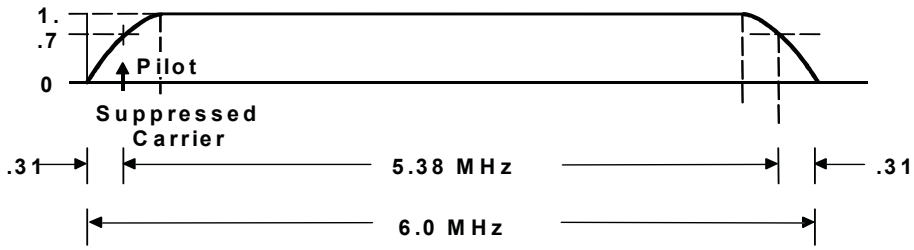

Figure 6.4 VSB channel occupancy (nominal).

6.4 Channel Error Protection

Main channel error protection consists of a concatenated RS encoding, interleaving and 4-state trellis encoding for the Main Service.

As an option, Enhanced modes may be employed. There are two modes available, with choice of levels of error protection within each method defined. These Enhanced modes provide methods to trade off data rate from the Main Service to facilitate reception. For a particular mode choice, the data rate assigned to the mode is variable in pre-defined steps.

Exhibit 1015
TCL v. Maxell - IPR2025-00134
Page 36 of 136

There is a set of methods for adding additional forward error correction coding layers to the data before sending the data via a constrained version of 8-VSB. This method is called Enhanced 8-VSB. Various coding rate options are defined, and the payload assignment between the Enhanced 8-VSB data and the Main data is selectable at defined values.

The Main Service channel error protection is specified first, followed by the Enhanced mode.

6.4.1 Main Service Data Error Detection and Correction Facility

6.4.1.1 Main Service Data Randomizer

A data randomizer shall be used on all input data (including an Enhanced stream if present) to randomize the data payload. The data randomizer XORs all the incoming data bytes with a 16-bit maximum length pseudo random binary sequence (PRBS) which is initialized at the beginning of the Data Field. The PRBS is generated in a 16-bit shift register that has 9 feedback taps. Eight of the shift register outputs are selected as the fixed randomizing byte, where each bit from this byte is used to individually XOR the corresponding input data bit. The data bits are XORed MSB to MSB ... LSB to LSB.

The randomizer generator polynomial is as follows:

$$G_{(16)} = X^{16} + X^{13} + X^{12} + X^{11} + X^{7} + X^{6} + X^{3} + X + 1$$

The initialization (pre-load) to 0xF180 (load to 1) occurs during the Data Segment Sync interval prior to the first Data Segment.

The randomizer generator polynomial and initialization is shown in Figure 6.5.

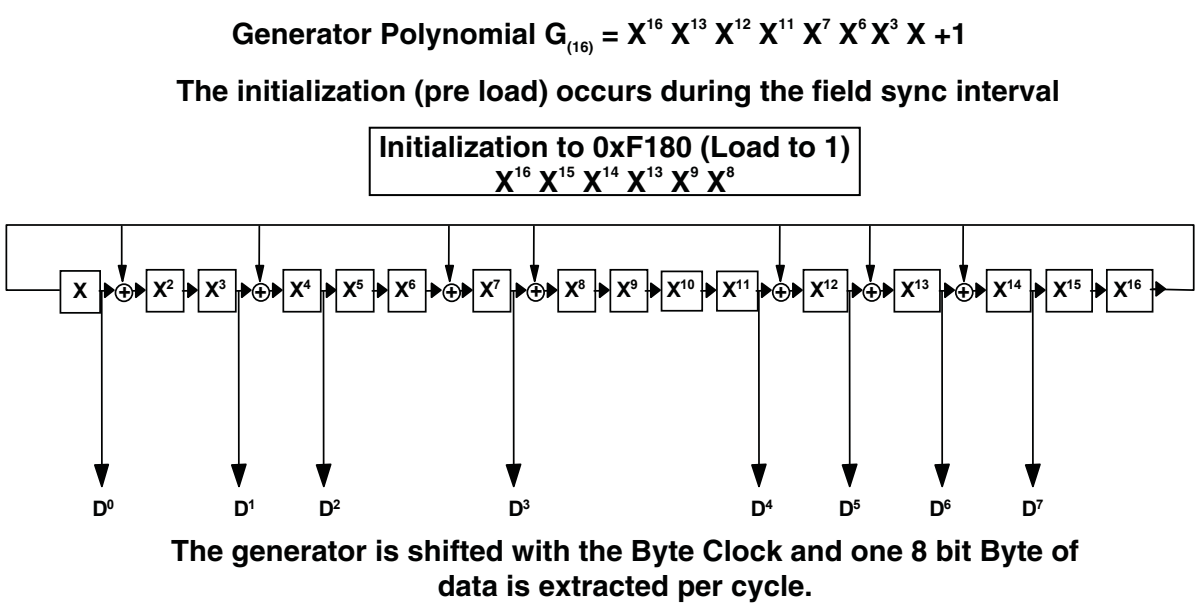

Figure 6.5 Randomizer polynomial.

6.4.1.2 Main Service Reed-Solomon Encoder

The randomizer output is the input for the RS Encoder. The RS code used in the VSB transmission subsystem shall be a t = l0 (207,187) code. The RS data block size is 187 bytes,

Exhibit 1015
TCL v. Maxell - IPR2025-00134
Page 37 of 136

with 20 RS parity bytes added for error correction. A total RS block size of 207 bytes is transmitted per Data Segment.

In creating bytes from the serial bit stream, the MSB shall be the first serial bit. The 20 RS parity bytes shall be sent at the end of the Data Segment. The parity generator polynomial and the primitive field generator polynomial are shown in Figure 6.6.

$$\prod_{i=0}^{i=2t-1}(X+\alpha^{i}) = X^{20}+X^{19}\alpha^{17}+X^{18}\alpha^{60}+X^{17}\alpha^{79}+X^{16}\alpha^{50}+X^{15}\alpha^{61}+X^{14}\alpha^{163}+X^{13}\alpha^{26}+X^{12}\alpha^{187}+X^{11}\alpha^{202}+X^{10}\alpha^{180}+X^{9}\alpha^{221}+X^{8}\alpha^{225}+X^{7}\alpha^{83}+X^{6}\alpha^{239}+X^{5}\alpha^{156}+X^{4}\alpha^{164}+X^{3}\alpha^{212}+X^{2}\alpha^{212}+X^{1}\alpha^{188}+\alpha^{190}$$

$$= X^{20}+152X^{19}+185X^{18}+240X^{17}+5X^{16}+111X^{15}+99X^{14}+6X^{13}+220X^{12}+112X^{11}+150X^{10}+69X^{9}+36X^{8}+187X^{7}+22X^{6}+228X^{5}+198X^{4}+121X^{3}+121X^{2}+165X^{1}+174$$

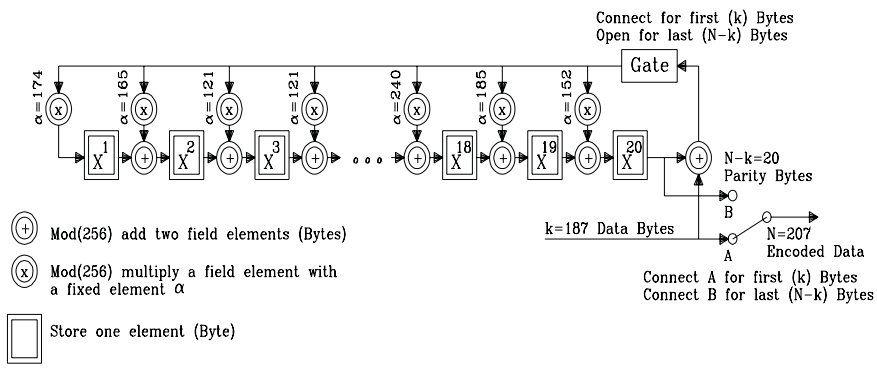

Primitive Field Generator Polynomial (Galois Field)

$$G(256) = X^{8}+X^{4}+X^{3}+X^{2}+1$$

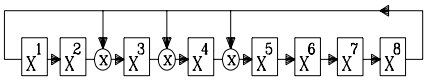

Each shift of the generator produces a field element

Figure 6.6 Reed-Solomon (207,187) t=10 parity generator polynomial.

6.4.1.3 Main Service Interleaving

The interleaver employed in the VSB transmission system shall be a 52 data segment (intersegment) convolutional byte interleaver. Interleaving is provided to a depth of about one-sixth of a data field (4 ms deep). Only data bytes (including the RS parity bytes) shall be interleaved. The interleaver shall be synchronized to the first data byte of the data field. Intrasegment interleaving is also performed for the benefit of the trellis coding process. The convolutional interleaver is shown in Figure 6.7.

Exhibit 1015
TCL v. Maxell - IPR2025-00134
Page 38 of 136

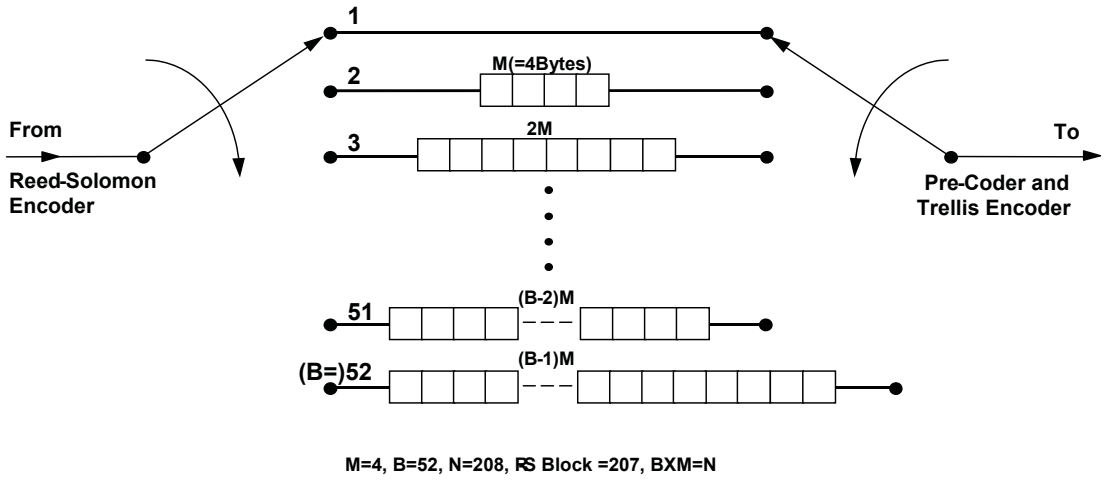

Figure 6.7 Convolutional interleaver (byte shift register illustration).

6.4.1.4 Main Service Trellis Coding

The 8 VSB transmission sub-system shall employ a two-thirds rate (R=2/3) trellis code (with one unencoded bit which is precoded). That is, one input bit is encoded into two output bits using a one-half rate convolutional code while the other input bit is precoded. The signaling waveform used with the trellis code is an 8-level (3 bit) one-dimensional constellation. The transmitted signal is referred to as 8-VSB. A 4-state trellis encoder shall be used.

Trellis code intrasegment interleaving shall be used. This uses twelve identical trellis encoders and precoders operating on interleaved data symbols. The code interleaving is accomplished by encoding symbols (0, 12, 24, 36 ...) as one group, symbols (1, 13, 25, 37, ...) as a second group, symbols (2, 14, 26, 38, ...) as a third group, and so on for a total of 12 groups.

In creating serial bits from parallel bytes, the MSB shall be sent out first: (7, 6, 5, 4, 3, 2, 1, 0). The MSB is precoded (7, 5, 3, 1) and the LSB is feedback convolutional encoded (6, 4, 2, 0). Standard 4-state optimal Ungerboeck codes shall be used for the encoding. The trellis code utilizes the 4-state feedback encoder shown in Figure 6.8. Also shown is the precoder and the symbol mapper. The trellis code and precoder intrasegment interleaver is shown in Figure 6.9 which feeds the mapper detailed in Figure 6.8. Referring to Figure 6.9, data bytes are fed from the byte interleaver to the trellis coder and precoder, and they are processed as whole bytes by each of the twelve encoders. Each byte produces four symbols from a single encoder.

Exhibit 1015
TCL v. Maxell - IPR2025-00134
Page 39 of 136

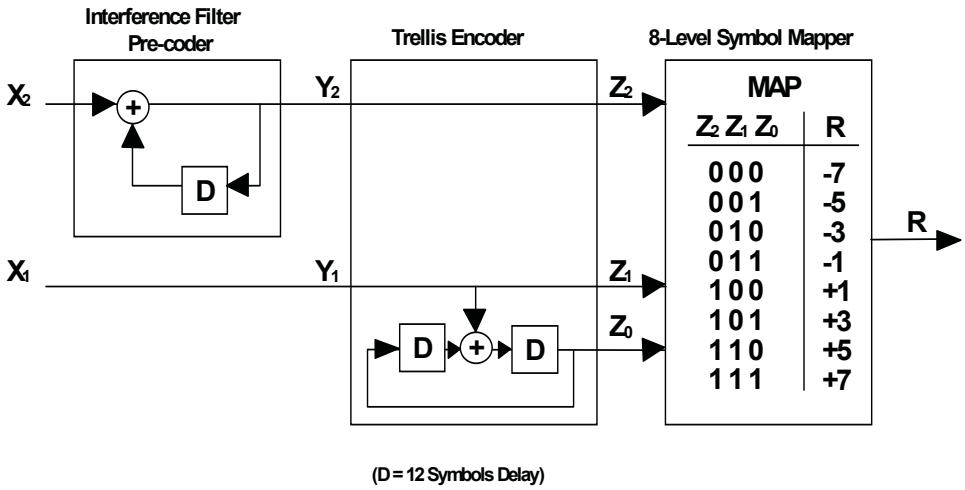

Figure 6.8 Main Service trellis encoder, precoder, and symbol mapper.

The output multiplexer shown (as the right circle) in Figure 6.9 shall advance by four symbols on each segment boundary. However, the state of the trellis encoder shall not be advanced. The data coming out of the multiplexer shall follow normal ordering from encoder 0 through 11 for the first segment of the frame, but on the second segment the order changes and symbols are read from encoders 4 through 11, and then 0 through 3. The third segment reads from encoder 8 through 11 and then 0 through 7. This three-segment pattern shall repeat through the 312 Data Segments of the frame. Table 6.1 shows the interleaving sequence for the first three Data Segments of the frame.

Exhibit 1015
TCL v. Maxell - IPR2025-00134
Page 40 of 136

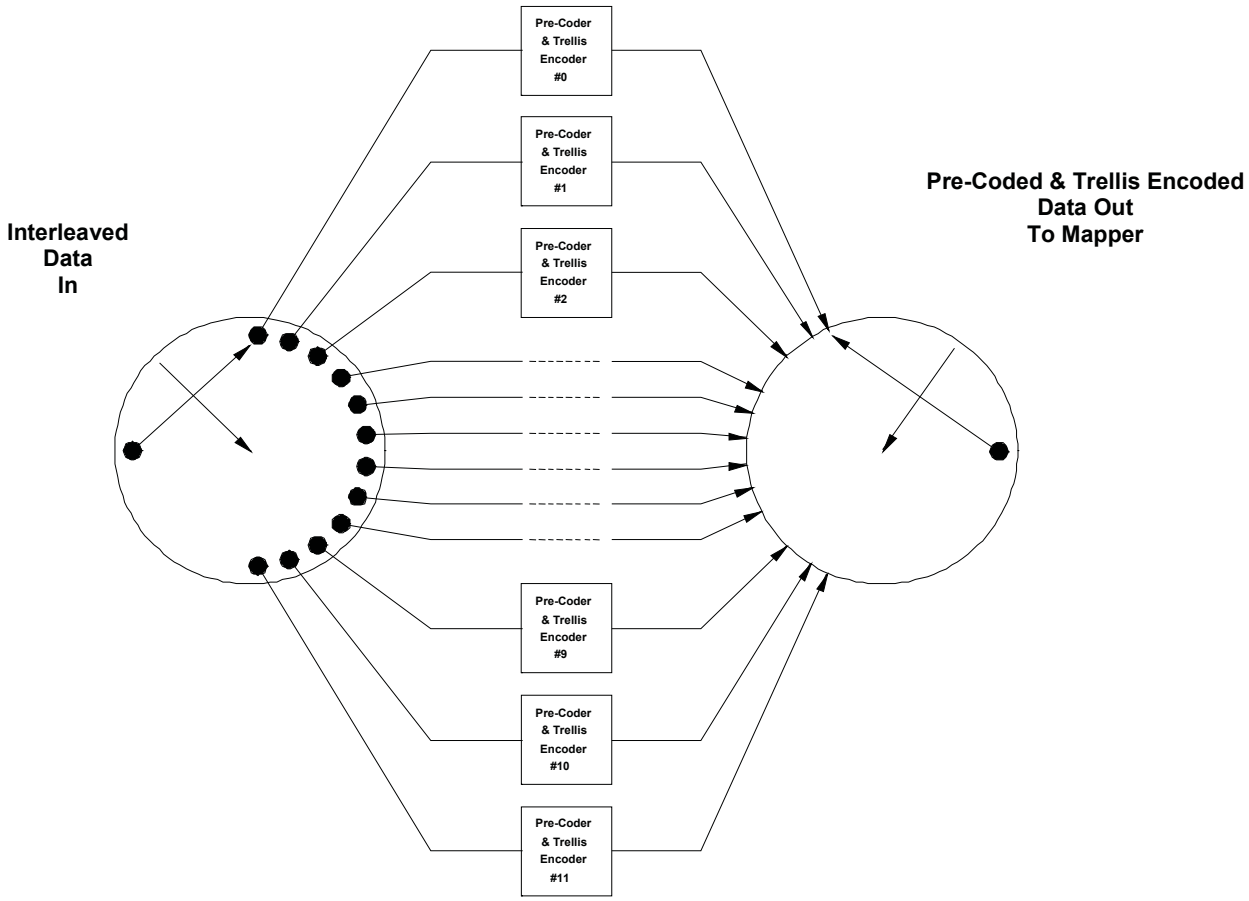

Figure 6.9 Trellis code interleaver.

After the Data Segment Sync is inserted, the ordering of the data symbols is such that symbols from each encoder occur at a spacing of twelve symbols.

Table 6.1 Interleaving Sequence

Segment	Block 0	Block 1	...	Block 68
0	D0 D1 D2 ... D11	D0 D1 D2 ... D11	...	D0 D1 D2 ... D11
1	D4 D5 D6 ... D3	D4 D5 D6 ... D3	...	D4 D5 D6 ... D3
2	D8 D9 D10 ... D7	D8 D9 D10 ... D7	...	D8 D9 D10 ... D7

A complete conversion of parallel bytes to serial bits needs 828 bytes to produce 6624 bits. Data symbols are created from 2 bits sent in MSB order, so a complete conversion operation yields 3312 data symbols, which corresponds to 4 segments of 828 data symbols. 3312 data symbols divided by 12 trellis encoders gives 276 symbols per trellis encoder. 276 symbols divided by 4 symbols per byte gives 69 bytes per trellis encoder.

The conversion starts with the first segment of the field and proceeds with groups of 4 segments until the end of the field. 312 segments per field divided by 4 gives 78 conversion operations per field.

Exhibit 1015
TCL v. Maxell - IPR2025-00134
Page 41 of 136

Allowing for segment sync the input to 4 encoders is skipped but the encoders cycle with no input. The input is held until the next multiplex cycle and then fed to the correct encoder.

Table 6.2 details the byte to symbol conversion and the associated multiplexing of the trellis encoders. Segment 0 is the first segment of the field. The pattern repeats every 12 segments; segments 5 through 11 are not shown.

Table 6.2 Byte to Symbol Conversion, Multiplexing of Trellis Encoders

Symbol	Segment 0			Segment 1			Segment 2			Segment 3			Segment 4		
	Trellis	Byte	Bits	Trellis	Byte	Bits	Trellis	Byte	Bits	Trellis	Byte	Bits	Trellis	Byte	Bits
0	0	0	7,6	4	208	5,4	8	412	3,2	0	616	1,0	4	828	7,6
1	1	1	7,6	5	209	5,4	9	413	3,2	1	617	1,0	5	829	7,6
2	2	2	7,6	6	210	5,4	10	414	3,2	2	618	1,0	6	830	7,6
3	3	3	7,6	7	211	5,4	11	415	3,2	3	619	1,0	...	...	...
4	4	4	7,6	8	212	5,4	0	416	3,2	4	620	1,0	...	...	...
5	5	5	7,6	9	213	5,4	1	417	3,2	5	621	1,0	...	...	...
6	6	6	7,6	10	214	5,4	2	418	3,2	6	622	1,0	...	...	...
7	7	7	7,6	11	215	5,4	3	419	3,2	7	623	1,0	...	...	...
8	8	8	7,6	0	204	5,4	4	408	3,2	8	612	1,0	...	...	...
9	9	9	7,6	1	205	5,4	5	409	3,2	9	613	1,0	...	...	...
10	10	10	7,6	2	206	5,4	6	410	3,2	10	614	1,0	...	...	...
11	11	11	7,6	3	207	5,4	7	411	3,2	11	615	1,0	...	...	...
12	0	0	5,4	4	208	3,2	8	412	1,0	0	624	7,6	...	...	...
13	1	1	5,4	5	209	3,2	9	413	1,0	1	625	7,6	...	...	...
...	...	...	...	...	...	...	...	...	...	...	...	...	...	...	...
19	7	7	5,4	11	215	3,2	3	419	1,0	7	631	7,6	...	...	...
20	8	8	5,4	0	204	3,2	4	408	1,0	8	632	7,6	...	...	...
21	9	9	5,4	1	205	3,2	5	409	1,0	9	633	7,6	...	...	...
22	10	10	5,4	2	206	3,2	6	410	1,0	10	634	7,6	...	...	...
23	11	11	5,4	3	207	3,2	7	411	1,0	11	635	7,6	...	...	...
24	0	0	3,2	4	208	1,0	8	420	7,6	0	624	5,4	...	...	...
25	1	1	3,2	5	209	1,0	9	421	7,6	1	625	5,4	...	...	...
...	...	...	...	...	...	...	...	...	...	...	...	...	...	...	...
31	7	7	3,2	11	215	1,0	3	427	7,6	...	...	...	...	...	...
32	8	8	3,2	0	204	1,0	4	428	7,6	...	...	...	...	...	...
33	9	9	3,2	1	205	1,0	5	429	7,6	...	...	...	...	...	...
34	10	10	3,2	2	206	1,0	6	430	7,6	...	...	...	...	...	...
35	11	11	3,2	3	207	1,0	7	431	7,6	...	...	...	...	...	...
36	0	0	1,0	4	216	7,6	8	420	5,4	...	...	...	...	...	...
37	1	1	1,0	5	217	7,6	9	421	5,4	...	...	...	...	...	...
...	...	...	...	...	...	...	...	...	...	...	...	...	...	...	...
47	11	11	1,0	3	227	7,6	...	...	...	...	...	...	...	...	...
48	0	12	7,6	4	216	5,4	...	...	...	...	...	...	...	...	...
49	1	13	7,6	5	217	5,4	...	...	...	...	...	...	...	...	...
...	...	...	...	...	...	...	...	...	...	...	...	...	...	...	...
95	11	23	1,0	...	...	...	...	...	...	...	...	...	...	...	...

Exhibit 1015
TCL v. Maxell - IPR2025-00134
Page 42 of 136

96	0	24	7,6	...	...	...	...	...	...	...	...	...	...	...	...
97	1	25	7,6	...	...	...	...	...	...	...	...	...	...	...	...
...	...	...	...	...	...	...	...	...	...	...	...	...	...	...	...
767	11	191	1,0	...	...	...	...	...	...	...	...	...	...	...	...
768	0	192	7,6	...	...	...	...	...	...	...	...	...	...	...	...
769	1	193	7,6	...	...	...	...	...	...	...	...	...	...	...	...
...	...	...	...	...	...	...	...	...	...	...	...	...	...	...	...
815	11	203	1,0	3	419	7,6	7	623	5,4	11	827	3,2	...	...	...
816	0	204	7,6	4	408	5,4	8	612	3,2	0	816	1,0	...	...	...
817	1	205	7,6	5	409	5,4	9	613	3,2	1	817	1,0	...	...	...
...	...	...	...	...	...	...	...	...	...	...	...	...	...	...	...
827	11	215	7,6	3	419	5,4	7	623	3,2	11	827	1,0	...	...	...

6.4.2 Main and Enhanced Service Data Error Detection and Correction Facilities

When Enhanced Services are enabled (see Figure 6.2), the processing steps for both Main Service data and Enhanced Service data are somewhat different than for Main Service data alone. The requirements for the RF transmission system with Enhanced data capability are specified herein.

6.4.2.1 Enhanced Data Protection

Enhanced data is protected by a concatenated FEC comprised by an additional FEC (applied to the Enhanced Service) and by the Main FEC. Enhanced channel error protection uses an additional interleaver (Enhanced interleaver), an additional Reed Solomon encoding scheme (Enhanced RS encoding), an additional convolutional interleaver (Enhanced convolutional interleaver), and an additional 4-state convolutional encoder (Enhanced convolutional encoder). The Enhanced data and Enhanced RS parity bytes are encapsulated within the transport level payload portion of an MPEG-2 Packet. The Enhanced 4-state convolutional encoder is concatenated and synchronized with the Main trellis 4-state encoding to produce an effective 16-state trellis encoder for the Enhanced data. Enhanced FEC offers two encoding modes defined as one-half rate and one-quarter rate E8-VSB modes. The following sections establish requirements for each functional block of the Enhanced FEC shown in Figure 6. 2

The input to the preprocessor shall be 188-byte MPEG-2 packets.

The data intended to be encoded by the Main and Enhanced FEC is split into a maximum of three parallel streams. Each stream is associated with a Main, an Enhanced one-half rate, or an Enhanced one-quarter rate FEC mode status.

Appropriate buffering is inserted in both the Main and the Enhanced MPEG-2 streams, and Enhanced data is sent through the E8-VSB Pre-Processor. Enhanced data shall be Reed Solomon encoded, and each byte shall be expanded by the ratio of 1:2 (for one-half rate coding) or 1:4 (for one-quarter rate coding) to form place-holder bits for the 4-state Enhanced convolutional coding. The expanded bytes shall be formatted in MPEG-2 compliant packets, which shall be multiplexed with packets from the Main MPEG-2 stream (Main Service).

Exhibit 1015
TCL v. Maxell - IPR2025-00134
Page 43 of 136

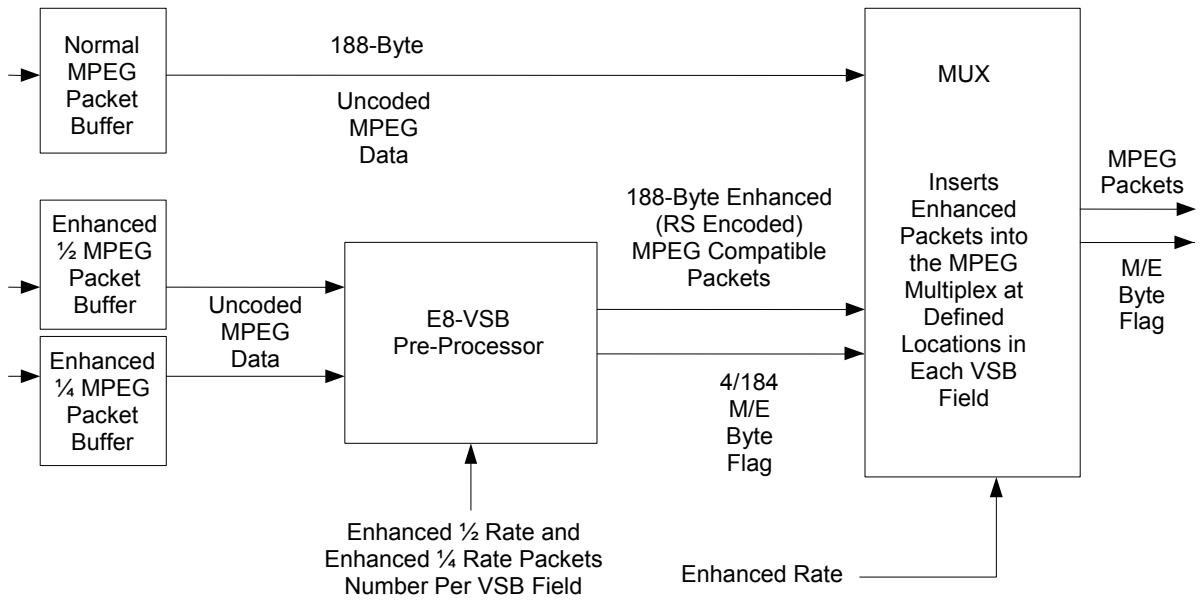

Figure 6.10 Main and Enhanced Mux Packet Processor.

6.4.2.1.1 E8-VSB Pre-Processor

6.4.2.1.1.1 164-Byte Packet Converter

The data intended to be encoded with either the one-half rate Enhanced FEC or the one-quarter rate Enhanced FEC shall be processed by the packet converter, which shall organize the 188-byte MPEG-2 data input into 164-byte packets.

6.4.2.1.1.2 Enhanced One-Half Rate and One-Quarter Rate Packet Multiplexer

The payload of the Enhanced data, comprised of one-half rate and one-quarter rate 164-byte packets to be transmitted in a VSB field, is specified by the E-VSB map and is constant for a group of sixteen VSB frames (see Section 6.7).

The one-half rate and one-quarter rate 164-byte packets corresponding to the Enhanced payload carried by a VSB frame are packed in a buffer prior to being sent to the RS encoder. The maximum number of 164-byte packets allowed for the Enhanced one-half rate mode is 156. The maximum number of 164-byte packets allowed for the Enhanced one-quarter rate mode is 78. The maximum buffer depth shall be 156.

Placement of the one-half rate and one-quarter rate 164-byte packets shall occur at specific locations in the multiplexing buffer. The location of the Enhanced 164-byte packet in the Enhanced multiplexer buffer shall be defined as follows:

- When the 10th bit of the 12-bit payload of the E-VSB map (starting from the leftmost bit) is set to ‘1’, the 164-byte packets will alternate between one-half rate and one-quarter rate packets until the number of Enhanced 164-byte packets intended to be carried by the 8-VSB field is reached. The first Enhanced packet processed by the RS encoder shall be the first one-half rate packet (if one-half rate packets are present) incoming to the buffer multiplexer.
- When the 10th bit is set to ‘0’, the one-half rate and the one-fourth rate 164-byte packets shall be grouped together. The buffer shall be segmented into two parts. The first part of

Exhibit 1015
TCL v. Maxell - IPR2025-00134
Page 44 of 136

the buffer shall contain, consecutively, all of the one-half rate 164-byte packets, and the second part of the buffer shall contain, consecutively, all of the one-fourth rate 164-byte packets. The first packet processed by the RS encoder shall be the first one-half rate packet (if one-half rate packets are present) incoming to the buffer multiplexer.

Each PCR [1] shall be adjusted to accommodate the actual MPEG-2 Transport Stream packet [1] delivery time.

Additionally, the Enhanced multiplexer buffer shall carry an H/Q flag, which shall identify the nature of each 164-byte packet. This H/Q flag shall have two states: "H" for one-half rate and "Q" for one-fourth rate.

6.4.2.1.1.3 Enhanced RS

The first function after the segment multiplexer shall be an encoding of the 164-byte packets of data to be sent via this enhanced means by an RS encoder with parameters t = 10 (184,164). The Primitive Field Generating Polynomial shall be the same as that specified in Figure 6.6, which is also used for the Main RS encoder. The RS encoder will pass through the H/Q flag generated by the previous block and shall extend it to the parity bytes generated by the RS encoder.

6.4.2.1.1.4 Enhanced Data Interleaver

The interleaver is mainly intended to provide additional protection against burst noise and bursty errors produced by channel degradations. The Enhanced RS encoder shall be followed by an Enhanced data interleaver that shall perform a convolutional byte interleave with parameters B=46, M=4, N=184. The Enhanced interleaver shall make multiple complete revolutions per data field for all Enhanced data code rates. It shall start at the top (zero delay) row in the same manner as the Main byte interleaver. The interleaver for all mix percentages of Enhanced data shall introduce a constant delay to an MPEG-2 transport stream. The conceptual structure may be seen in Figure 6.7. The data interleaver shall carry the H/Q flag generated during the operation of buffer multiplexing of the 164-byte packets. The H/Q flag shall remain in time synchronization with each byte it describes.

6.4.2.1.1.5 Enhanced Bytes Expansion and Addition of MPEG-2 Header

Each byte associated with the Enhanced one-half rate FEC mode is expanded into two bytes. The expansion of the one-half rate byte is as specified below.

Original Enhanced Byte	Expanded Enhanced Byte (E7,E6,E5,E4,E3,E2,E1,E0)	Expanded Byte Number
(R7,R6,R5,R4,R3,R2,R1,R0)	(R7,X,R6,X,R5,X,R4,X)	1
	(R3,X,R2,X,R1,X,R0,X)	0

Exhibit 1015
TCL v. Maxell - IPR2025-00134
Page 45 of 136

Each byte associated with the Enhanced one-fourth rate FEC mode is expanded into four bytes. The expansion of the one-fourth rate byte is as specified below.

Original Enhanced Byte	Expanded Enhanced Byte (E7,E6,E5,E4,E3,E2,E1,E0)	Expanded Byte Number
(R7,R6,R5,R4,R3,R2,R1,R0)	(R7,X,R7,X,R6,X,R6,X)	3
	(R5,X,R5,X,R4,X,R4,X)	2
	(R3,X,R3,X,R2,X,R2,X)	1
	(R1,X,R1,X,R0,X,R0,X)	0

The bits R7 through R0 of the original one-half rate and one-fourth rate bytes are respectively mapped into two and four Enhanced bytes. The bits E7 through E0 are bit positions in the subsequently expanded byte. The “X” in the expanded bytes denotes a placeholder and may be coded by 0.

For the rate one-half, the expanded byte number “0” shall represent the LSB byte and the byte number “1” shall represent the MSB byte. For the rate one-fourth, the expanded byte number “0” shall represent the LSB byte of the 4 bytes word, and the expanded byte number “3” shall represent the MSB byte. For both the one-half rate and one-fourth rate the original byte replacement shall start with the MSB byte of respectively the two and four expanded bytes.

The expanded bytes are formatted into 184-byte segments. Each reconstructed 184-byte segment packet may consist of both one-half rate and one-fourth rate expanded Enhanced bytes.

For the purpose for maintaining strict backward compatibility for existing receivers, 188-byte packets that contain Enhanced encoded data are composed of a 0x47 Sync byte, followed by 3 bytes as defined by [1] that contain the null packet designation (PID = 0x1FFF), and the 184-byte enhanced segment

The encapsulated Enhanced RS encoding (184,164) in the E8-VSB Pre-Processor reduces the effective payload of these packets by an additional 20 bytes to 164.

After the introduction of the header bytes, the H/Q flag carried through the previous blocks is dropped. Another flag, called the M/E flag, is used and shall be in the Enhanced state when Enhanced bytes are clocked out of the E8-VSB Pre-Processor and shall be in the Main state when the 4-byte MPEG-2 header is clocked out of the E8-VSB Pre-Processor.

Exhibit 1015
TCL v. Maxell - IPR2025-00134
Page 46 of 136

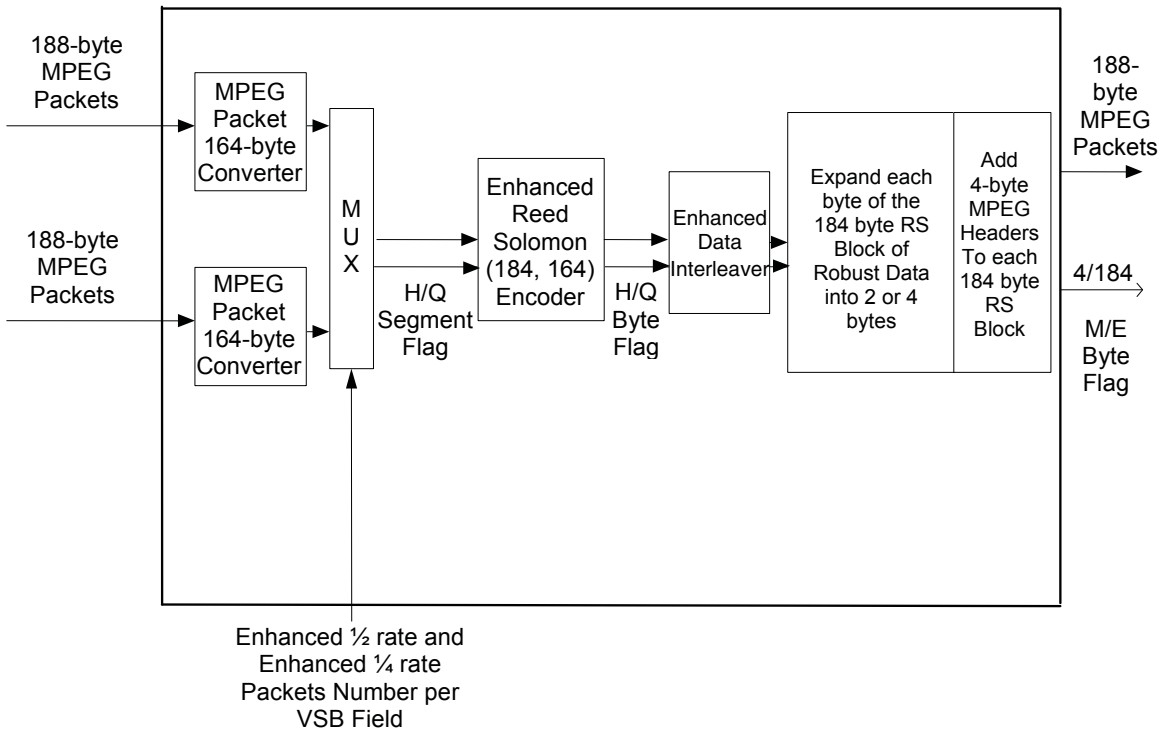

Figure 6.11 E8-VSB pre-processor.

6.4.2.2 Data Randomizer

The data byte processing shall be per Section 6.4.1.1, and the M/E flag shall not be modified and shall remain in time synchronization with each byte it describes. The value shall change state on byte boundaries when the associated byte belongs to a different class of bytes. The M/E flag shall be in the Main state when the bytes correspond to either the Main MPEG-2 packets or to the 4-byte header of the Enhanced MPEG-2 compliant packets. The M/E flag shall be in the Enhanced state when the bytes correspond to the payload of the reconstructed Enhanced MPEG-2 packets.

6.4.2.3 Reed Solomon Encoder

All bytes output from the data randomizer shall be sent to the RS encoder. The data byte processing shall be as specified in Section 6.4.1.2, and the M/E flag shall be maintained as Enhanced for the 184 Enhanced bytes and shall be set to Main for all other bytes. All RS parity bytes are Main mode bytes and shall have their flags associated to their Main states.

6.4.2.4 Data Interleaver

The output of the Reed-Solomon Encoder, including both Main Service data and robust data, shall be interleaved by a convolutional data byte interleaver. This data interleaver shall have the same parameters as a Main-Service-only interleaver, as specified in Section 6.4.1.3. In addition, the Main/Enhanced (M/E) control signal from the Reed-Solomon Encoder (which changes state on byte boundaries) shall be interleaved using the same parameters as the data, so that the output M/E control signal shall correctly indicate the M/E type of each data byte output from the interleaver.

Exhibit 1015
TCL v. Maxell - IPR2025-00134
Page 47 of 136

6.4.2.5 E8-VSB Convolutional Coder

The E8-VSB convolutional coder is comprised of a symbol interleaver, an Enhanced symbol processor, and a symbol de-interleaver. The symbol interleaver corresponds to the 12-way Trellis code interleaving described in Section 6.4.1.4. The M/E flag shall also go through the same interleaving as the symbol interleaver. The symbol de-interleaver shall be the inverse of the earlier described symbol interleaver, with the exception of the M/E flag, which is not passed through.

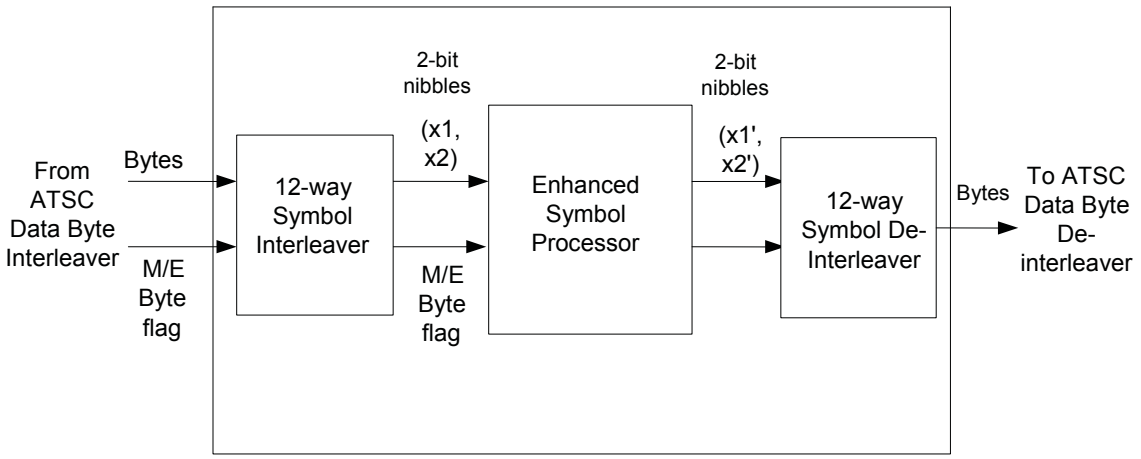

Figure 6.12 E8-VSB convolutional coder (12-way interleave/de-interleave).

6.4.2.5.1 Enhanced Symbol Processor

For reference, in the Main transmission mode, each of the 12 parallel trellis encoders receive and encode a byte of data from the Main interleaver in the following order: (7,6,5,4,3,2,1,0), where 7 is the MSB and 0 is the LSB.

The Enhanced symbol Processor contains the convolutional encoder with a 4-state feedback. The convolutional encoder process the incoming bytes by group of 2-bit nibbles. The convolutional code is the same as that for the normal trellis encoder, as illustrated in Figure 6.9. Referring to Figure 6.13, for all Enhanced transmission modes, the M/E flag selects the Enhanced input ("E") to the illustrated lower three muxes to perform convolutional encoding of the X2 bit to produce the X2' bit. For the Main mode of transmission, the control line selects the Main input ("N") of the muxes to hold the convolutional encoder in its current state and to derive the X1' bit directly from the X1 bit.

For normal bytes the four groups of 2-bit nibbles associated with one of the 12-convolutional encoders are passed through, and the states of the encoder are updated. For Enhanced bytes, bits in positions E7, E5, E3, and E1 are encoded by the systematic convolutional encoder. Bits in positions E6, E4, E2, and E0 are not processed. Placeholder of the four groups of 2-bit nibbles are replaced with the encoded X1' bit.

Exhibit 1015
TCL v. Maxell - IPR2025-00134
Page 48 of 136

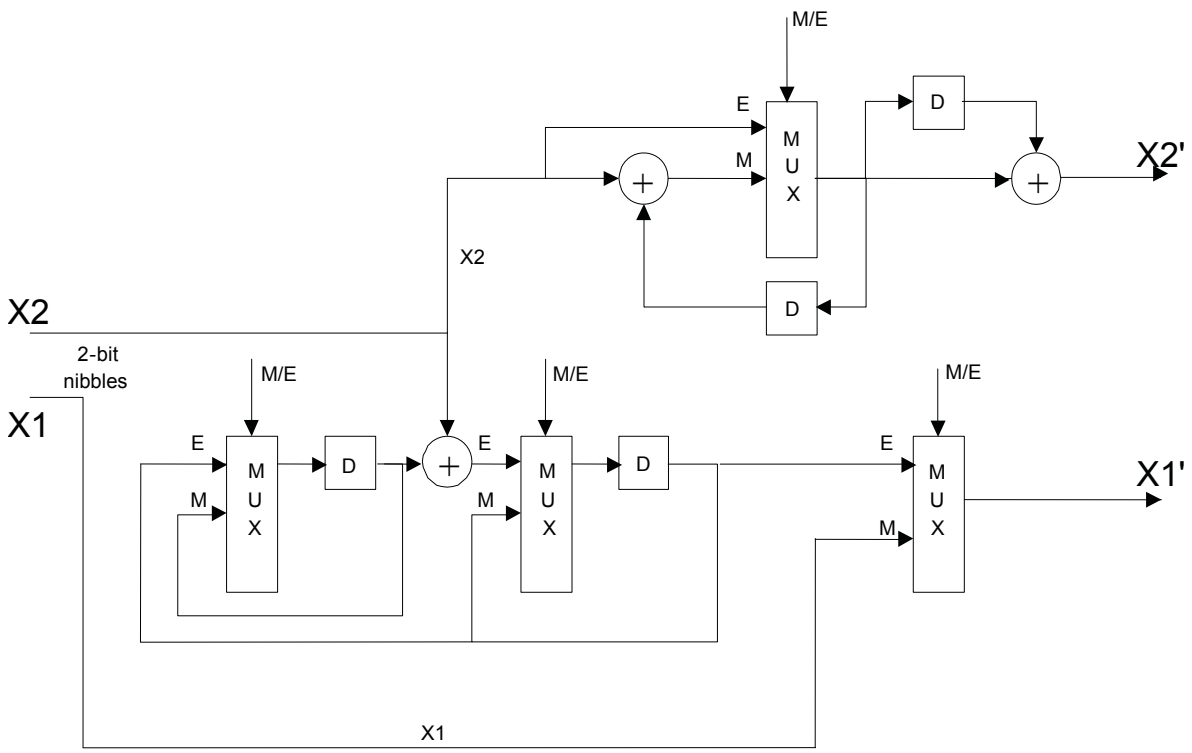

Figure 6.13 Enhanced Symbol Processor.

6.4.2.5.2 Precode Bypass

The upper portion of Figure 6.13 illustrates the operation of the Precoder Bypass in the Enhanced symbol processor. The function of the Precoder Bypass is to produce a systematic trellis code for the Enhanced data (when the Enhanced convolutional encoder is concatenated with the normal trellis encoder), where Z2 is the information bit, Z1 is the output of the Enhanced convolutional encoder and derived from X1'.

For all robust transmission modes, the M/E flag selects the "E" input to the uppermost mux. The resulting X2' bit shown is then the derivative of the X2 bit. Upon subsequent Interference Filter Precoding, as depicted in Figure 6.8, the resulting Z2 bit produced is identical to the X2 bit in Figure 6.13. For the Main mode of transmission, the "M" input to the uppermost mux is selected, and the X2 bit is integrated and subsequently differentiated, therefore making the X2' bit identical to the X2 bit. Upon subsequent Interference Filter Precoding, the Y2 bit is achieved for the Main mode of transmission.

The normally encoded RS parity bytes of the Enhanced packets can introduce a phase inversion that produces an inverted systematic trellis code for the Enhanced data. Appropriate decoding of the Enhanced data depends on the Enhanced data trellis decoder's capability to decode either phase.

6.4.2.6 Data Byte De-Interleaver

The data byte de-interleaver is the inverse function of the Main convolutional interleaver.

Exhibit 1015
TCL v. Maxell - IPR2025-00134
Page 49 of 136

6.4.2.7 RS Byte Delete and De-Randomizer

The RS parity bytes are removed and a de-randomizer, which is the inverse function of the Main randomizer, is applied to each byte of the 188-byte segment.

6.5 Synchronization

This section defines synchronization for data segments and fields.

6.5.1 Data Segment Sync

The encoded trellis data shall be passed through a multiplexer that inserts the various synchronization signals (Data Segment Sync and Data Field Sync).

A two-level (binary) 4-symbol Data Segment Sync shall be inserted into the 8-level digital data stream at the beginning of each Data Segment. (The MPEG-2 sync byte shall be replaced by Data Segment Sync.) The Data Segment Sync embedded in random data is illustrated in Figure 6.14.

A complete segment shall consist of 832 symbols: 4 symbols for Data Segment Sync, and 828 data plus parity symbols. The Data Segment Sync is binary (2-level). The same sync pattern occurs regularly at 77.3 μs intervals, and is the only signal repeating at this rate. Unlike the data, the four symbols for Data Segment Sync are not Reed-Solomon or trellis encoded, nor are they interleaved. The Data Segment Sync pattern shall be a '1001' pattern, as shown in Figure 6.14.

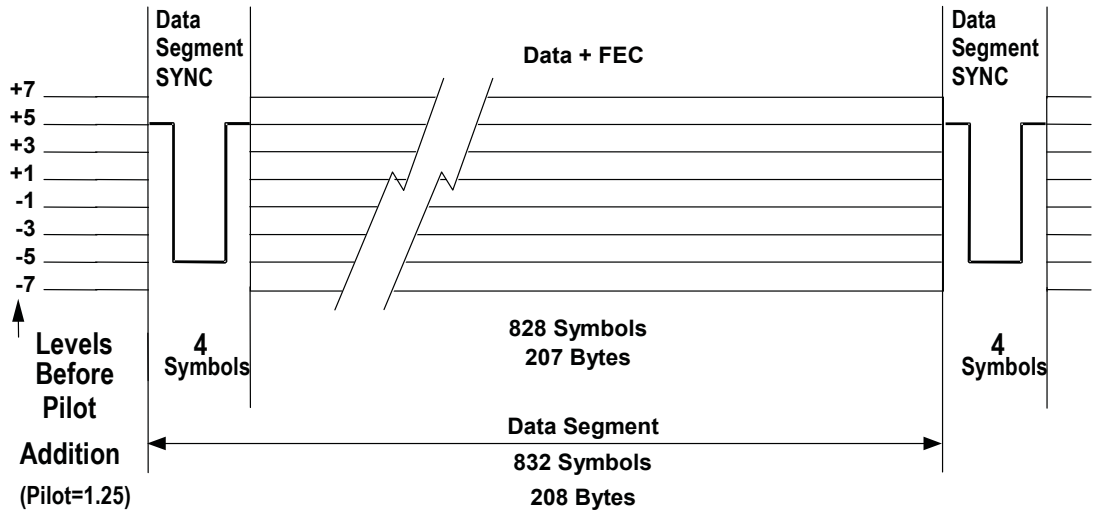

Figure 6.14 8-VSB data segment.

6.5.2 Data Field Sync

The data are not only divided into Data Segments, but also into Data Fields, each consisting of 313 segments. Each Data Field (24.2 ms) shall start with one complete Data Segment of Data Field Sync, as shown in Figure 6.15. Each symbol represents one bit of data (2-level). The arrangement of the 832 symbols in this segment are defined below. Refer to Figure 6.15 for the placement of these components during the data field sync. The sync in Figure 6.15 is the same as the Data Segment Sync and is defined as '1001'.

Exhibit 1015
TCL v. Maxell - IPR2025-00134
Page 50 of 136

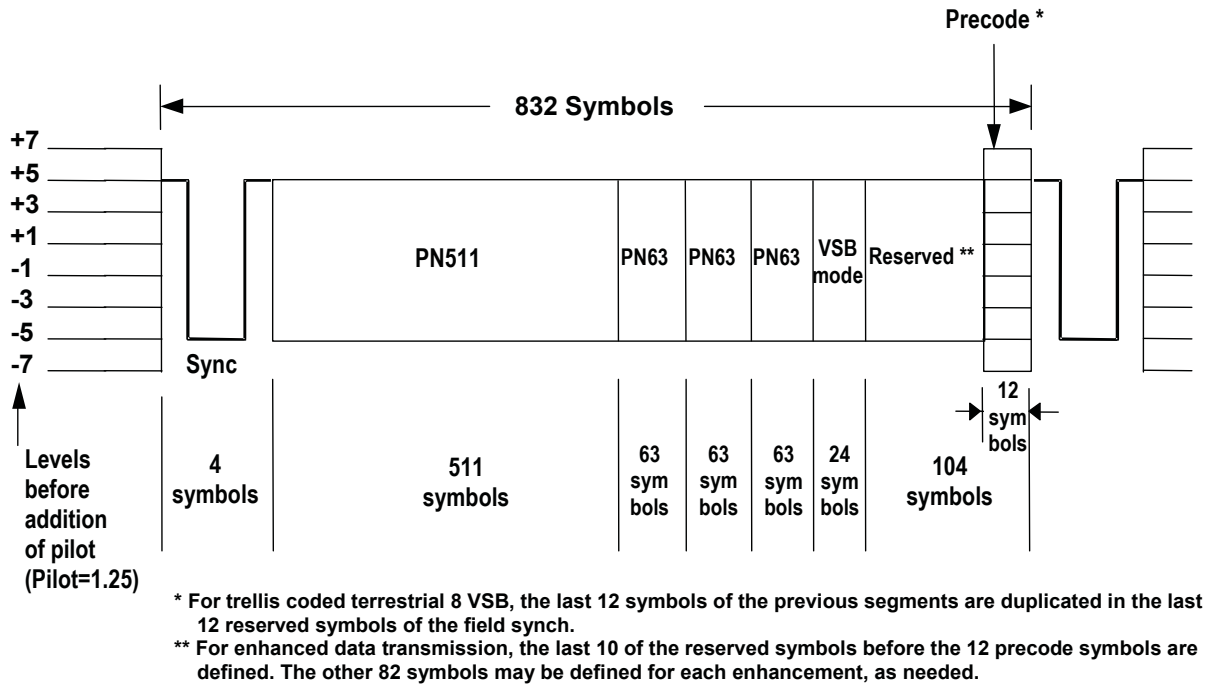

Figure 6.15 VSB data field sync.

6.5.2.1 Definition of the PN511 Sequence

This pseudo-random sequence is defined as $X^9 + X^7 + X^6 + X^4 + X^3 + X + 1$ with a pre-load value of '010000000'. The sequence is:

'0000 0001 0111 1111 1100 1010 1010 1110 0110 0110 1000 1000 1001 1110 0001 1101
0111 1101 0011 0101 0011 1011 0011 1010 0100 0101 1000 1111 0010 0001 0100 0111
1100 1111 0101 0001 0100 1100 0011 0001 0000 0100 0011 1111 0000 0101 0100 0000
1100 1111 1110 1110 1010 1001 0110 0110 0011 0111 0111 1011 0100 1010 0100 1110
0111 0001 0111 0100 0011 0100 1111 1011 0001 0101 1011 1100 1101 1010 1110 1101
1001 0110 1101 1100 1001 0010 1110 0011 1001 0111 1010 0011 0101 1000 0100 1101
1111 0001 0010 1011 1100 0110 0101 0000 1000 1100 0001 1110 1111 1101 0110 1010
1100 1001 1001 0001 1101 1100 0010 1101 0000 0110 1100 0000 1001 0000 0001 110'

6.5.2.2 Definition of the PN63 Sequence

This pseudo-random sequence is repeated three times. It is defined as $X^6 + X + 1$ with a pre-load value of '100111'. The middle PN63 is inverted on every other Data Field Sync. The sequence is:

'1110 0100 1011 0111 0110 0110 1010 1111 1100 0001 0000 1100 0101 0011 1101 000'

The generators for the PN63 and PN511 sequences are shown in Figure 6.16.

Exhibit 1015
TCL v. Maxell - IPR2025-00134
Page 51 of 136

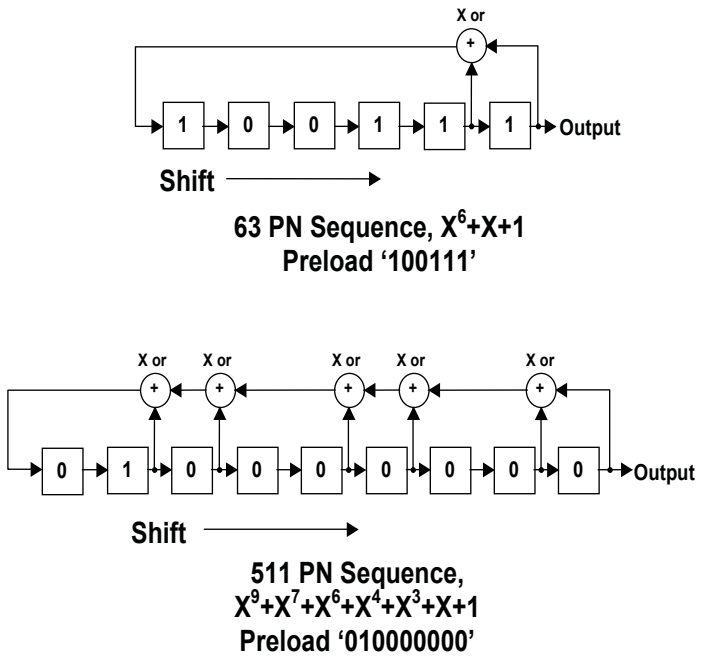

Figure 6.16 Field sync PN sequence generators.

6.5.2.3 VSB Mode Bits

These 24 bits determine the VSB mode for the data in the frame. The first two bytes are reserved. The fill pattern for these two bytes shall be '0000 1111 0000 1111' when 8 VSB is not signaled. The next byte is defined as:

$$P \quad A \quad B \quad C \quad \overline{P \quad A \quad B \quad C}$$

where P is the even parity bit, the MSB of the byte, and A, B, C are the actual mode bits.

P	A	B	C	
0	0	0	0	Reserved
1	0	0	1	Reserved
1	0	1	0	Reserved
0	0	1	1	Reserved
1	1	0	0	16 VSB
0	1	0	1	8 VSB*
0	1	1	0	Reserved
1	1	1	1	Reserved

* In the 8 VSB mode, the preceding bits are defined as:

$$0 \quad 0 \quad 0 \quad 0 \quad \overline{P \quad A \quad B \quad C} \quad P \quad A \quad B \quad C \quad 1 \quad 1 \quad 1 \quad 1$$

Exhibit 1015
TCL v. Maxell - IPR2025-00134
Page 52 of 136

6.5.2.4 Reserved

In the 8-VSB mode, 92 symbols of the last 104 symbols shall be reserved, and they shall be followed by the 12 symbols defined below. To maintain a longer period with a flat spectrum, it is recommended that these 92 symbols be filled with a continuation of the PN63 sequence when only 8-VSB is present.

When one or more enhanced data transmission methods are used, the previously reserved symbols (including the 12 precode symbols used for 8-VSB and E8-VSB) shall be numbered from 1 to 104, in the order transmitted. The 12 precode symbols shall be preceded by 10 symbols that shall be used to signal the presence of an enhancement or enhancements, as defined below. The use of some or all of the remaining 82 symbols shall be defined by each enhancement.

6.5.2.5 Precode

In the 8 VSB mode, the last 12 symbols of the segment shall correspond to the last 12 symbols of the previous segment. All sequences are pre-loaded before the beginning of the Data Field Sync.

Like the Data Segment Sync, the Data Field Sync is not Reed-Solomon or trellis encoded, nor is it interleaved.

6.5.2.6 Enhancement Signaling

Symbols 85 through 92 shall be used for indication of specific future enhancements. If no enhancements are present, they may be set equal to –5 on odd data fields (positive PN63 in the preceding structure). If one or more enhancements are present, all symbols except those signaling one or more enhancements shall be set to –5 (positive PN63). The particular symbol that shall be used to signal each enhancement by setting its value to +5 (positive PN63) is specified hereinafter for each.

Symbols 83 and 84 are reserved for signaling future alternative definitions of symbols numbered 85 through 92 and shall be set to –5 (positive PN63) unless such alternative definitions are signaled as defined hereinafter.

On even data fields (negative PN63), the polarities of symbols 83 through 92 shall be inverted from those in the odd data field.

6.6 Enhanced Mode Data Rates

The Enhanced mix signaling in the data field sync provides 9 bits for selection of the mixture of Main, one-half rate and one-fourth rate data (512 choices). The tables for rate selection are formulated to provide denser packing at lower Enhanced data rates, to allow use of the minimum Enhanced data required by an application.

The amount of Main, one-half rate and one-fourth rate data present in a data frame shall be as indicated for that frame using one of the values from Table 6.3, which in turn references Tables 6.4*a*, and 6.4*b*.

Table 6.3, “Steps Numbers vs. Map Address,” indicates an ordinal “Step Number” for each of the one-half rate and one-fourth rate data, corresponding to each 9-bit map address, with each bit labeled with a letter from “A” to “I”. The three most significant bits (IHG) are shown in the top row and the six least significant bits (FEDCBA) of the map address are shown in the left column. The “Step Numbers” for the one-half rate data and one-fourth rate data corresponding to

Exhibit 1015
TCL v. Maxell - IPR2025-00134
Page 53 of 136

each 9-bit address are found at the intersection of the three-bit column address and the 6-bit row address.

Table 6.4*a*, "Rate Segments and Payload vs. Step Number – one-half Rate", indicates the number of data segments used by one-half rate data which shall be used for a given step number (which is referenced from Table 6.3).

Table 6.4*b*, "Rate Segments and Payload vs. Step Number – one-fourth Rate", indicates the number of data segments used by one-fourth rate data which shall be used for a given step number (which is referenced from Table 6.3).

Tables 6.4*a* and 6.4*b* also include informative columns. These columns show the approximate percent of segments allocated for Enhanced data, the payload of the Main data for the case when the Enhanced data consists of exclusively one-half rate or one-fourth rate data, and the payload of the Enhanced one-fourth or one-half rate data (respectively) for a given step number.

6.6.1 Enhanced Stream Rate Limits

Limits have been defined for the maximum bitrate in the Enhanced (E-VSB) service.

At all times, the quality of video in the main stream shall be equal to or better than the equivalent program in the Enhanced stream. In the event that the programming is different in the main and Enhanced streams, a higher resolution format is deemed to be higher quality.

Additionally, during premium programming times, the maximum bitrate in the enhanced (E-VSB) stream shall be 3 Mbps out of the total 19.4 Mbps channel capacity.

Of the map addresses 0_d to 511_d (notated as IHGFEDCBA in binary in Table 6.3) the decimal values of the only map addresses that shall be used when the 3 Mbps limit applies are: 0-70,72-77, 80-84, 88-90, 128-132, 136-139, 144-147, 152-154, 160-162, 168, 169, and 176.

Exhibit 1015
TCL v. Maxell - IPR2025-00134
Page 54 of 136

Table 6.3 Steps vs. Map Address

IHG→ FEDCBA	000		001		010		011		100		101		110		111	
	½	¼	½	¼	½	¼	½	¼	½	¼	½	¼	½	¼	½	¼
	Step No.		Step No.		Step No.		Step No.		Step No.		Step No.		Step No.		Step No.	
000000	0	0	0	8	8	0	8	8	0	17	17	0	0	25	0	29
000001	1	0	1	8	9	0	9	8	1	16	16	1	1	24	1	28
000010	2	0	2	8	10	0	10	8	2	17	17	2	2	25	3	29
000011	3	0	3	8	11	0	11	8	3	16	16	3	3	24	4	28
000100	4	0	4	8	12	0	12	8	4	17	17	4	4	25	6	29
000101	5	0	5	8	13	0	13	8	5	16	16	5	5	24	7	28
000110	6	0	6	8	14	0	14	8	6	17	17	6	6	25	9	29
000111	7	0	7	8	15	0	15	8	7	16	16	7	7	24	10	28
001000	0	1	0	9	8	1	8	9	8	17	17	8	8	25	12	28
001001	1	1	1	9	9	1	9	9	9	16	16	9	9	24	0	31
001010	2	1	2	9	10	1	10	9	10	17	17	10	10	25	2	30
001011	3	1	3	9	11	1	11	9	11	16	16	11	11	24	5	30
001100	4	1	4	9	12	1	12	9	12	17	17	12	12	25	16	17
001101	5	1	5	9	13	1	13	9	13	16	16	13	13	24	17	18
001110	6	1	6	9	14	1	14	9	14	17	17	14	14	25	16	19
001111	7	1	7	9	15	1	15	9	15	16	16	15	15	24	17	20
010000	0	2	0	10	8	2	8	10	0	19	19	0	0	27	16	21
010001	1	2	1	10	9	2	9	10	1	18	18	1	1	26	17	22
010010	2	2	2	10	10	2	10	10	2	19	19	2	2	27	16	23
010011	3	2	3	10	11	2	11	10	3	18	18	3	3	26	17	24
010100	4	2	4	10	12	2	12	10	4	19	19	4	4	27	16	25
010101	5	2	5	10	13	2	13	10	5	18	18	5	5	26	16	26
010110	6	2	6	10	14	2	14	10	6	19	19	6	6	27	18	19
010111	7	2	7	10	15	2	15	10	7	18	18	7	7	26	19	20
011000	0	3	0	11	8	3	8	11	8	19	19	8	8	27	18	21
011001	1	3	1	11	9	3	9	11	9	18	18	9	9	26	19	22
011010	2	3	2	11	10	3	10	11	10	19	19	10	10	27	18	23
011011	3	3	3	11	11	3	11	11	11	18	18	11	11	26	19	24
011100	4	3	4	11	12	3	12	11	12	19	19	12	12	27	18	25
011101	5	3	5	11	13	3	13	11	13	18	18	13	13	26	20	21
011110	6	3	6	11	14	3	14	11	14	19	19	14	14	27	21	22
011111	7	3	7	11	15	3	15	11	15	18	18	15	15	26	20	23
100000	0	4	0	12	8	4	8	12	0	21	21	0	25	0	29	0
100001	1	4	1	12	9	4	9	12	1	20	20	1	24	1	28	1
100010	2	4	2	12	10	4	10	12	2	21	21	2	25	2	29	3
100011	3	4	3	12	11	4	11	12	3	20	20	3	24	3	28	4
100100	4	4	4	12	12	4	12	12	4	21	21	4	25	4	29	6
100101	5	4	5	12	13	4	13	12	5	20	20	5	24	5	28	7
100110	6	4	6	12	14	4	14	12	6	21	21	6	25	6	29	9
100111	7	4	7	12	15	4	15	12	7	20	20	7	24	7	28	10

Exhibit 1015
TCL v. Maxell - IPR2025-00134
Page 55 of 136

101000	0	5	0	13	8	5	8	13	8	21	21	8	25	8	28	12
101001	1	5	1	13	9	5	9	13	9	20	20	9	24	9	31	0
101010	2	5	2	13	10	5	10	13	10	21	21	10	25	10	30	2
101011	3	5	3	13	11	5	11	13	11	20	20	11	24	11	30	5
101100	4	5	4	13	12	5	12	13	12	21	21	12	25	12	17	16
101101	5	5	5	13	13	5	13	13	13	20	20	13	24	13	18	17
101110	6	5	6	13	14	5	14	13	14	21	21	14	25	14	19	16
101111	7	5	7	13	15	5	15	13	15	20	20	15	24	15	20	17
110000	0	6	0	14	8	6	8	14	0	23	23	0	27	0	21	16
110001	1	6	1	14	9	6	9	14	1	22	22	1	26	1	22	17
110010	2	6	2	14	10	6	10	14	2	23	23	2	27	2	23	16
110011	3	6	3	14	11	6	11	14	3	22	22	3	26	3	24	17
110100	4	6	4	14	12	6	12	14	4	23	23	4	27	4	25	16
110101	5	6	5	14	13	6	13	14	5	22	22	5	26	5	26	16
110110	6	6	6	14	14	6	14	14	6	23	23	6	27	6	19	18
110111	7	6	7	14	15	6	15	14	7	22	22	7	26	7	20	19
111000	0	7	0	15	8	7	8	15	8	23	23	8	27	8	21	18
111001	1	7	1	15	9	7	9	15	9	22	22	9	26	9	22	19
111010	2	7	2	15	10	7	10	15	10	23	23	10	27	10	23	18
111011	3	7	3	15	11	7	11	15	11	22	22	11	26	11	24	19
111100	4	7	4	15	12	7	12	15	12	23	23	12	27	12	25	18
111101	5	7	5	15	13	7	13	15	13	22	22	13	26	13	21	20
111110	6	7	6	15	14	7	14	15	14	23	23	14	27	14	22	21
111111	7	7	7	15	15	7	15	15	15	22	22	15	26	15	23	20

Exhibit 1015
TCL v. Maxell - IPR2025-00134
Page 56 of 136

Table 6.4*a* Segments and Payload vs. Step Number- one-half Rate

Step #	Segments Used	Percent of Segments Allocated for Enhanced (informative)	Main Data Rate (Mbps) (informative)	½ rate (Mbps) (informative)
0	0	0	19.3927	0.0000
1	2	0.64	19.2683	0.0542
2	4	1.28	19.144	0.1084
3	6	1.92	19.0197	0.1627
4	8	2.56	18.8954	0.2169
5	12	3.85	18.6468	0.3253
6	16	5.13	18.3982	0.4338
7	20	6.41	18.1495	0.5422
8	24	7.69	17.9009	0.6507
9	28	8.97	17.6523	0.7591
10	32	10.26	17.4037	0.8675
11	40	12.82	16.9064	1.0844
12	48	15.38	16.4092	1.3013
13	56	17.95	15.9119	1.5182
14	64	20.51	15.4147	1.7351
15	72	23.08	14.9174	1.9520
16	80	25.64	14.4202	2.1688
17	88	28.21	13.9229	2.3857
18	96	30.77	13.4257	2.6026
19	112	35.9	12.4312	3.0364
20	128	41.03	11.4367	3.4702
21	144	46.15	10.4422	3.9039
22	160	51.28	9.4477	4.3377
23	176	56.41	8.4532	4.7715
24	192	61.54	7.4587	5.2052
25	208	67.95	6.2156	5.6390
26	224	73.08	5.2211	6.0728
27	240	76.92	4.4752	6.5065
28	256	82.05	3.4807	6.9403
29	272	87.18	2.4862	7.3741
30	288	92.31	1.4917	7.8078
31	312	100	0	8.4585

Exhibit 1015
TCL v. Maxell - IPR2025-00134
Page 57 of 136

Table 6.4*b* Segments and Payload vs. Step Number- one-fourth Rate

Step #	Segments Used	Percent of Segments Allocated for Enhanced (informative)	Main Data Rate (Mbps) (informative)	¼ Rate (Mbps) (informative)
0	0	0.00	19.3927	0.0000
1	4	1.28	19.1440	0.0542
2	8	2.56	18.8954	0.1084
3	12	3.85	18.6468	0.1627
4	16	5.13	18.3982	0.2169
5	20	6.41	18.1495	0.2711
6	24	7.69	17.9009	0.3253
7	28	8.97	17.6523	0.3795
8	32	10.26	17.4037	0.4338
9	36	11.54	17.1550	0.4880
10	40	12.82	16.9064	0.5422
11	44	14.10	16.6578	0.5964
12	52	16.67	16.1605	0.7049
13	60	19.23	15.6633	0.8133
14	68	21.79	15.1661	0.9218
15	76	24.36	14.6688	1.0302
16	84	26.92	14.1716	1.1386
17	92	29.49	13.6743	1.2471
18	100	32.05	13.1771	1.3555
19	116	37.18	12.1826	1.5724
20	132	42.31	11.1881	1.7893
21	148	47.44	10.1936	2.0062
22	164	52.56	9.1991	2.2231
23	180	57.69	8.2046	2.4400
24	196	62.82	7.2101	2.6568
25	212	67.95	6.2156	2.8737
26	228	73.08	5.2211	3.0906
27	244	78.21	4.2266	3.3075
28	260	83.33	3.2321	3.5244
29	276	88.46	2.2376	3.7413
30	292	93.59	1.2431	3.9581
31	312	100.00	0.0000	4.2292

6.7 Enhanced Mode Map Bits

The signaling of the optional modes shall be done using the following bit assignments:

- The 64 two-level symbols in the data field sync immediately following the VSB mode bits shall be used to transmit the E8-VSB Enhanced segment locations during an Enhanced transmission.
- The map data shall indicate one of an allowed selection of possible Enhanced data mixes and segment arrangements, by means of an algorithm or look-up table. The data shall include a frame count indicating the next data frame at which the map will change.

Exhibit 1015
TCL v. Maxell - IPR2025-00134
Page 58 of 136

- The map data shall be coded with a Kerdock (64, 12) code.
- The polarity of the Kerdock code word shall be inverted on even (negative PN63) data fields.
- The twelve-bit payload shall contain the current map or the next map.
- In the odd (positive PN63) field, the leftmost 10 bits shall indicate the current map and the rightmost 2 bits shall be the high order bits of the frame count.
- In the even (negative PN63) field the leftmost 10 bits shall indicate the next map and the rightmost 2 bits shall be the low order bits of the frame count.
- Within each frame count bit pair, the higher order bit shall be leftmost.

6.7.1 Map to Frame Count to Frame Association

The map shall change at a maximum frequency of once per 16 data frames.

A data frame shall be defined as an odd (positive PN63) data field followed by an even (negative PN63) data field.

The frame count shall be decremented linearly from 15 to 0 in the frames preceding a map change.

Current map data shall point one frame ahead; i.e., to the second frame following a particular transmission of the current map data.

Next map data shall point 16 frames ahead; i.e. to the 17th frame following a particular transmission of the current map data.

An unchanging map shall be indicated by making the current map and next map equal and holding the frame count at 15 (‘1111’).

An example of the sequence of map bits during a change is given in the Table 6.5. In this example, the map is changed from map A, which has persisted for some time, to map B, which then persists for some time into the future.

Exhibit 1015
TCL v. Maxell - IPR2025-00134
Page 59 of 136

Table 6.5 Map Change Sequence

Frame Number	Frame Count	Map Data		Map Used
		Current Map	Next Map	
-3	15	A	A	A
-2	15	A	A	A
-1	15	A	B	A
0	15	A	B	A
1	14	A	B	A
2	13	A	B	A
3	12	A	B	A
4	11	A	B	A
5	10	A	B	A
6	9	A	B	A
7	8	A	B	A
8	7	A	B	A
9	6	A	B	A
10	5	A	B	A
11	4	A	B	A
12	3	A	B	A
13	2	A	B	A
14	1	A	B	A
15	0	B	B	A
16	15	B	B	B
17	15	B	B	B
18	15	B	B	B

6.7.2 Generation of Length of 64 Kerdock Codeword

The generator polynomial for the 64-bit Kerdock code word shall be

$$g(X) = \sum_{i=0}^{25} g_i X^i$$

where each g_i is an element of the row vector

$$g = \{1\ 1\ 1\ 2\ 0\ 1\ 2\ 2\ 0\ 1\ 0\ 3\ 0\ 3\ 1\ 3\ 3\ 0\ 1\ 3\ 2\ 1\ 2\ 2\ 1\ 3\}$$

with g_0 starting from the left.

The generator matrix shall be the following 6 x 32 matrix,

$$\text{gen_matrix} = \begin{matrix} g_\alpha & g_0 & g_1 \cdots & g_{25} & 0 & 0 & 0 & 0 & 0 \\ g_\alpha & 0 & g_0 & g_1 \cdots & g_{25} & 0 & 0 & 0 & 0 \\ g_\alpha & 0 & 0 & g_0 & g_1 \cdots & g_{25} & 0 & 0 & 0 \\ g_\alpha & 0 & 0 & 0 & g_0 & g_1 \cdots & g_{25} & 0_0 & \\ g_\alpha & 0 & 0 & 0 & 0 & g_0 & g_1 \cdots & g_{25} & 0 \\ g_\alpha & 0 & 0 & 0 & 0 & 0 & g_0 & g_1 \cdots & g_{25} \end{matrix}$$

Exhibit 1015
TCL v. Maxell - IPR2025-00134
Page 60 of 136

$$\text{where } g_\alpha = -\sum_{i=0}^{25} g_i \mod 4 = 1.$$

The resulting codeword shall be transmitted leftmost bit first.

6.7.3 Encoding Procedure

The 12 bit word to be encoded must first be transformed to the Z_4 domain word word_z4 by using the following mapping from bit pairs to modulo 4 digits.

‘00’ → 0
‘01’ → 1
‘11’ → 2
‘10’ → 3

After mapping to the Z_4 domain the word to be encoded is multiplied by the generator matrix.

codeword_z4 = [word_z4 x gen_matrix]

where word_z4 and codeword_z4 are row vectors.

Arithmetic operations are modulo 4.

The codeword is then converted back to binary using the following mapping.

0 → ‘00’
1 → ‘01’
2 → ‘11’
3 → ‘10’

Example:

Word to be encoded = ‘0 0 0 1 1 1 1 0 0 0 0 1.’

Convert word to Z_4 domain.

word_z4 = 0 1 2 3 0 1

Multiply word_z4 by the generator matrix.

codeword_z4 = [word_z4 x gen_matrix]
= 3013230013200021310230223010331 3

Convert codeword into binary.

codeword = ‘100001101110000001101100000011011001001110001111100001001010011 0’

6.8 Enhanced Data Packing Structure

There are two options for distributing the Enhanced packets within the normal packets. Option 1 defines a distribution of the Enhanced packets, in packet number index, which are multiples of 4 segments. Option 2 defines a uniform distribution of the Enhanced packets within the normal packet frame. Option 1 optimizes carrier to noise ratio performance. Option 2 optimizes performance in the presence of dynamic multipath.

Exhibit 1015
TCL v. Maxell - IPR2025-00134
Page 61 of 136

The 10th bit of the 12-bit E-VSB map shall decide which packing structure is to be used in the VSB frame. When the bit is set to '0', the packing shall refer to and be per packing option 1 defined below. When the bit is set to '1', the packing shall refer to and be per packing option 2 defined below.

6.8.1 Placement of Enhanced Mode Packets

Let 2P be the total number of Enhanced packets transmitted in a VSB frame, where 0<=P<= 156. Let the index s of the Enhanced packets inserted in the normal VSB frame be an interger between 0 and 311, Inclusive.

Option 1

The set *EMAP* of E8-VSB segment positions *s* shall be:

```
For 0<= P <= 39
EMAP = {s | s = 4i, i = 0,1,…,2P-1}, ( 0 <= s <= 311)

For 40<= P <= 78
EMAP = {s | s = 4i, i = 0,1,…,77} U {s | s = 4i+2, i = 0,1,…,2P-79}

For 79<= P <= 117
EMAP = {s | s = 4i, i = 0,1,…,77}
        U {s | s = 4i+2, i = 0,1,…,77}
        U {s | s = 4i+1, i = 0,1,…,2P-157}

For 118<= P <= 156 :
EMAP = {s | s = 4i, i = 0,1,…,77}
        U {s | s = 4i+2, i = 0,1,…,77}
        U {s | s = 4i+1, i = 0,1,…,77}
        U {s | s = 4i+3, i = 0,1,…,2P-235}
```

Where U is the union of sets, and {s | s =…criteria…} is the set of segment positions s that meet the stated criteria.

Option 2

The index s shall be calculated by the following algorithm written in pseudo-code.

```
M=round(156/P);

for k=0:2P-1
    s=k*M;
    if (s>=312)
        s=mod(s, 312)+1;
    end if
end for
```


Exhibit 1015
TCL v. Maxell - IPR2025-00134
Page 62 of 136

The function round() means "round up to the next integer value." The function mod() represents the operation modulo. For example, in case of P=6, the segment positions are given by s=(0, 26, 52, 78, 104, 130,156 , 182, 208, 234, 260, 286).

6.8.2 Packing of Enhanced Mode Data Within Packets

The Enhanced Reed-Solomon encoding block shall be 184 bytes long, of which 20 bytes are parity. Refer to Table 6.2.

For the case of a one-half rate Enhanced code, the Enhanced coder outputs 2 bits for each input bit, and Enhanced mode data shall be packed as one Enhanced Reed-Solomon block to a pair of data segments (1 bit per symbol).

For the case of a one-fourth rate Enhanced code, the Enhanced coder outputs 4 bits for each input bit, and Enhanced mode data shall be packed as one Enhanced Reed-Solomon block for every 4 data segments (one-half bit per symbol).

The packing of Enhanced mode Reed-Solomon blocks into data segments is shown in Table 6.6.

> Note: All below are shown conceptually pre-interleave; the interleaving process will disperse the data in the transmitted output).

Exhibit 1015
TCL v. Maxell - IPR2025-00134
Page 63 of 136

Table 6.6 Enhanced Data Encapsulation

For ½ Rate Outer Code			
tx hdr (12 symbols) 3 bytes	E8-VSB data (736 symbols) Payload 92 bytes		Main RS parity (80 symbols) 20 Bytes
tx hdr (12 symbols) 3 bytes	E8-VSB data (576 symbols) Payload 72 bytes	E8-VSB RS parity (160 symbols) 20 bytes	Main RS parity (80 symbols) 20 bytes
tx hdr (12 symbols) 3 bytes	E8-VSB data (736 symbols) Payload 92 bytes		Main RS parity (80 symbols) 20 bytes
tx hdr (12 symbols) 3 bytes	E8-VSB data (576 symbols) Payload 72 bytes	E8-VSB RS parity (160 symbols) 20 bytes	Main RS parity (80 symbols) 20 bytes
2 bits/symbol	1 bit/symbol		2 bits/symbol
For ¼ Rate Outer Code			
tx hdr (12 symbols) 3 bytes	E8-VSB data (736 symbols) Payload 46 bytes		Main RS parity (80 symbols) 20 bytes
tx hdr (12 symbols) 3 bytes	E8-VSB data (736 symbols) Payload 46 bytes		Main RS parity (80 symbols) 20 bytes
tx hdr (12 symbols) 3 bytes	E8-VSB data (736 symbols) Payload 46 bytes		Main RS parity (80 symbols) 20 bytes
tx hdr (12 symbols) 3 bytes	E8-VSB data (416 symbols) Payload 26 bytes	E8-VSB RS parity (320 symbols) 20 bytes	Main RS parity (80 symbols) 20 bytes
2 bits/symbol	0.5 bit/symbol		2 bits/symbol

6.8.3 E-8VSB Enhancement Signaling

On odd data fields (positive PN63), the presence of E8VSB shall be signaled by setting symbol 92 to level ‘+5’.

6.9 Modulation

6.9.1 Bit-to-Symbol Mapping

Figure 6.8 shows the mapping of the outputs of the trellis decoder to the nominal signal levels of (–7, –5, –3, –1, 1, 3, 5, 7). As shown in Figure 6.14, the nominal levels of Data Segment Sync and Data Field Sync are –5 and +5. The value of 1.25 is added to all these nominal levels after the bit-to-symbol mapping function for the purpose of creating a small pilot carrier.

6.9.2 Pilot Addition

A small in-phase pilot shall be added to the data signal. The frequency of the pilot shall be the same as the suppressed-carrier frequency as shown in Figure 6.4. This may be generated in the following manner. A small (digital) DC level (1.25) shall be added to every symbol (data and sync) of the digital baseband data plus sync signal (±l, ±3, ±5, ±7). The power of the pilot shall be 11.3 dB below the average data signal power.

Exhibit 1015
TCL v. Maxell - IPR2025-00134
Page 64 of 136

6.9.3 8 VSB Modulation Method

The VSB modulator receives the 10.76 Msymbols/s, 8-level trellis encoded composite data signal (pilot and sync added). The DTV system performance is based on a linear phase raised cosine Nyquist filter response in the concatenated transmitter and receiver, as shown in Figure 6.17. The system filter response is essentially flat across the entire band, except for the transition regions at each end of the band. Nominally, the roll-off in the transmitter shall have the response of a linear phase root raised cosine filter.

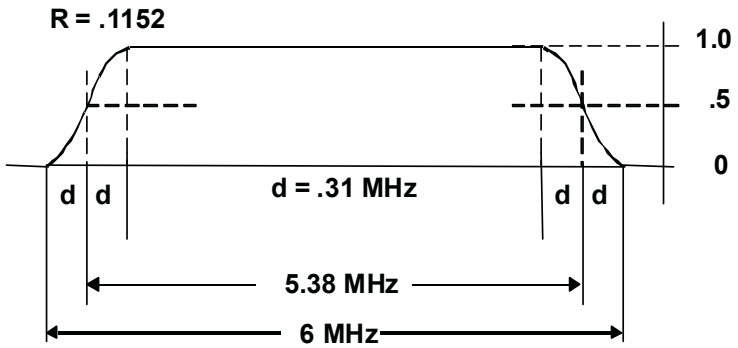

Figure 6.17 Nominal VSB system channel response (linear phase raised cosine Nyquist filter).

7. TRANSMISSION CHARACTERISTICS FOR HIGH DATA RATE MODE

7.1 Overview

The high data rate mode trades off transmission robustness (28.3 dB signal-to-noise threshold) for payload data rate (38.57 Mbps). Most parts of the high data rate mode VSB system are identical or similar to the terrestrial system. A pilot, Data Segment Sync, and Data Field Sync are all used to provide enhanced operation. The pilot in the high data rate mode also is 11.3 dB below the data signal power. The symbol, segment, and field signals and rates are all the same, allowing either receiver to lock up on the other's transmitted signal. Also, the data frame definitions are identical. The primary difference is the number of transmitted levels (8 versus 16) and the use of trellis coding and NTSC interference rejection filtering in the terrestrial system.

The RF spectrum of the high data rate modem transmitter looks identical to the terrestrial system, as illustrated in Figure 6.4. Figure 7.1 illustrates a typical data segment, where the number of data levels is seen to be 16 due to the doubled data rate. Each portion of 828 data symbols represents 187 data bytes and 20 Reed-Solomon bytes followed by a second group of 187 data bytes and 20 Reed-Solomon bytes (before convolutional interleaving).

Exhibit 1015
TCL v. Maxell - IPR2025-00134
Page 65 of 136

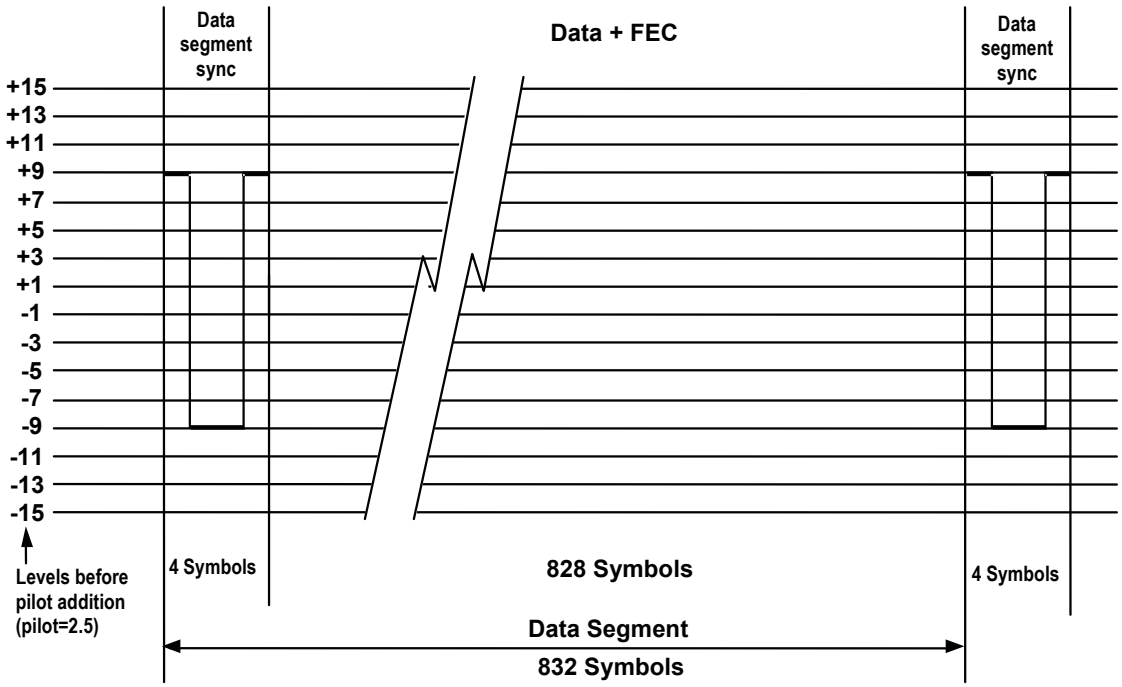

Figure 7.1 16-VSB data segment.

Figure 7.2 shows the block diagram of the transmitter. It is identical to the terrestrial VSB system except the trellis coding shall be replaced with a mapper that converts data to multi-level symbols. See Figure 7.3.

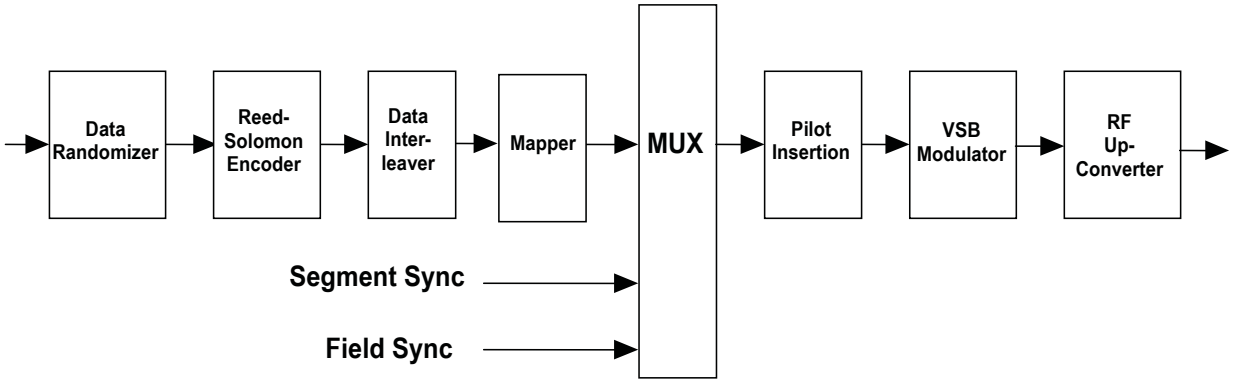

Figure 7.2 16-VSB transmitter.

Exhibit 1015
TCL v. Maxell - IPR2025-00134
Page 66 of 136

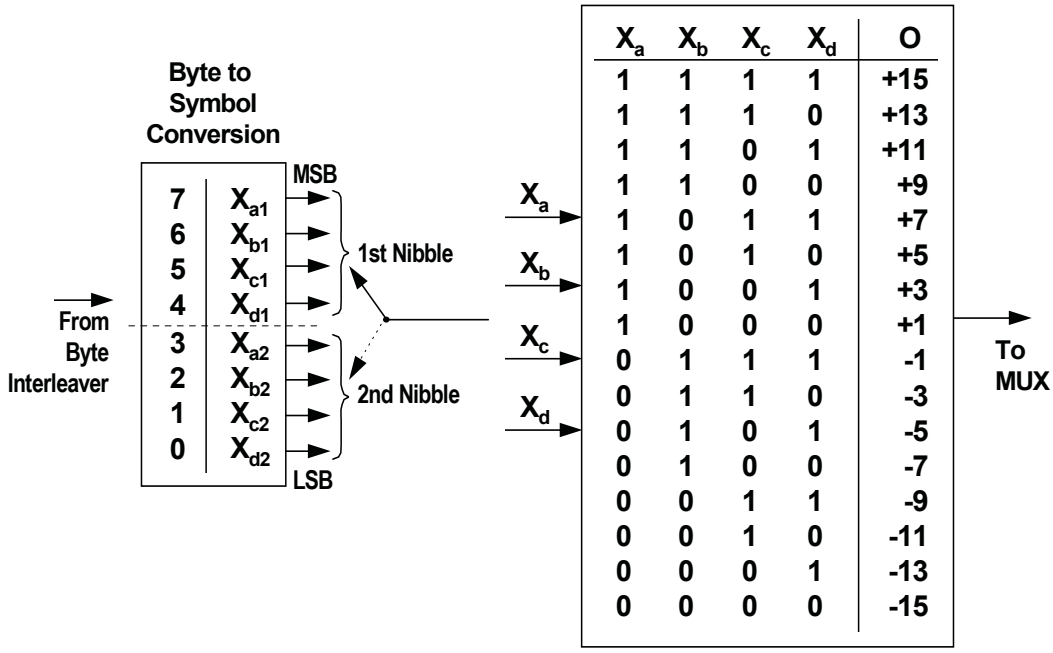

X_a	X_b	X_c	X_d	O
1	1	1	1	+15
1	1	1	0	+13
1	1	0	1	+11
1	1	0	0	+9
1	0	1	1	+7
1	0	1	0	+5
1	0	0	1	+3
1	0	0	0	+1
0	1	1	1	-1
0	1	1	0	-3
0	1	0	1	-5
0	1	0	0	-7
0	0	1	1	-9
0	0	1	0	-11
0	0	0	1	-13
0	0	0	0	-15

Figure 7.3 16-VSB mapper.

7.2 Channel Error Protection and Synchronization

7.2.1 Data Randomizer

See Section 6.4.1.1.

7.2.2 Reed-Solomon Encoder

See Section 6.4.1.2.

7.2.3 Interleaving

The interleaver shall be a 26 data segment inter-segment convolutional byte interleaver. Interleaving is provided to a depth of about 1/12 of a data field (2 ms deep). Only data bytes shall be interleaved.

7.2.4 Data Segment Sync

See Section 6.5.1.

7.2.5 Data Field Sync

See Section 6.5.2.

7.3 Modulation

7.3.1 Bit-to-Symbol Mapping

Figure 7.3 shows the mapping of the outputs of the interleaver to the nominal signal levels (–15, –13, –11, ..., 11, 13, 15). As shown in Figure 7.1, the nominal levels of Data Segment Sync and Data Field Sync are –9 and +9. The value of 2.5 is added to all these nominal levels after the bit-to-symbol mapping for the purpose of creating a small pilot carrier.

Exhibit 1015
TCL v. Maxell - IPR2025-00134
Page 67 of 136

7.3.2 Pilot Addition

A small in-phase pilot shall be added to the data signal. The frequency of the pilot shall be the same as the suppressed-carrier frequency as shown in Figure 6.4. This may be generated in the following manner. A small (digital) DC level (2.5) shall be added to every symbol (data and sync) of the digital baseband data plus sync signal (±l, ±3, ±5, ±7, ±9, ±11, ±13, ±15). The power of the pilot shall be 11.3 dB below the average data signal power.

7.3.3 16 VSB Modulation Method

The modulation method shall be identical to that in Section 6.9.3, except the number of transmitted levels shall be 16 instead of 8.

End of Part 2

Exhibit 1015
TCL v. Maxell - IPR2025-00134
Page 68 of 136

Doc. A/53, Part 3:2007
3 January 2007

ATSC Digital Television Standard
Part 3 – Service Multiplex and Transport Subsystem Characteristics
(A/53, Part 3:2007)

Advanced Television Systems Committee
1750 K Street, N.W.
Suite 1200
Washington, D.C. 20006
www.atsc.org

Exhibit 1015
TCL v. Maxell - IPR2025-00134
Page 69 of 136

The Advanced Television Systems Committee, Inc., is an international, non-profit organization developing voluntary standards for digital television. The ATSC member organizations represent the broadcast, broadcast equipment, motion picture, consumer electronics, computer, cable, satellite, and semiconductor industries.

Specifically, ATSC is working to coordinate television standards among different communications media focusing on digital television, interactive systems, and broadband multimedia communications. ATSC is also developing digital television implementation strategies and presenting educational seminars on the ATSC standards.

ATSC was formed in 1982 by the member organizations of the Joint Committee on InterSociety Coordination (JCIC): the Electronic Industries Association (EIA), the Institute of Electrical and Electronic Engineers (IEEE), the National Association of Broadcasters (NAB), the National Cable Television Association (NCTA), and the Society of Motion Picture and Television Engineers (SMPTE). Currently, there are approximately 140 members representing the broadcast, broadcast equipment, motion picture, consumer electronics, computer, cable, satellite, and semiconductor industries.

ATSC Digital TV Standards include digital high definition television (HDTV), standard definition television (SDTV), data broadcasting, multichannel surround-sound audio, and satellite direct-to-home broadcasting.

Exhibit 1015
TCL v. Maxell - IPR2025-00134
Page 70 of 136

Table of Contents

1. SCOPE 6

2. REFERENCES 6

2.1 Normative References 6

2.2 Informative References 6

3. COMPLIANCE NOTATION 7

3.1 Treatment of Syntactic Elements 7

3.2 Symbols, Abbreviations, and Mathematical Operators 7

4. DEFINITION OF TERMS 7

5. SYSTEM OVERVIEW 7

6. SPECIFICATION 9

6.1 MPEG-2 Systems Standard 9

6.1.1 Video T-STD 9

6.1.2 Audio T-STD 10

6.1.2.1 Audio T-STD When TS-E is Not Present 10

6.1.2.2 Audio T-STD When TS-E is Present 10

6.1.3 Program Constraints 10

6.1.3.1 ATSC Digital Television (service_type 0x02) 10

6.1.3.2 ATSC Audio (service_type 0x03) 10

6.1.3.3 Unassociated/Small Screen Service (service_type 0x06) 10

6.2 Identification of MPEG-2 Private Ranges 11

6.2.1 MPEG-2 Registration Descriptor 11

6.2.1.1 Program Identifier 11

6.2.1.2 Audio Elementary Stream Identifier 11

6.2.1.3 Other Program Element Identifiers 11

6.3 Audio Constraints 12

6.4 Constraints on PSI 12

6.4.1 Constraints on Main Services' Program Specific Information 12

6.4.2 PAT-E 13

6.4.3 PMT-E 13

6.4.4 Multiple PCR_PIDs per Program and a Common Time Base 13

6.4.5 Constraints on Optional Enhanced Services' Program Specific Information 13

6.5 PES Constraints 14

6.5.1 MPEG-2 Video PES Constraints (for streams of stream_type 0x02) 14

6.5.2 AC-3 Audio PES Constraints (for Streams of stream_type 0x81) 15

6.5.3 Audio PES Constraints for Enhanced AC-3 (stream_type = 0x87) 15

6.6 Services and Features 15

6.6.1 System Information and Program Guide 15

Exhibit 1015
TCL v. Maxell - IPR2025-00134
Page 71 of 136

6.6.1.1 SI base_PID for TS-M 16
6.6.1.2 SI base_PID for TS-E 16
6.6.1.3 System Information and Program Guide STD Model 16
6.6.2 Specification of ATSC Private Data 16
6.7 Assignment of Identifiers 16
6.7.1 AC-3 Audio Stream Type 16
6.7.2 MPEG-2 Video Stream Type 16
6.7.3 Enhanced AC-3 Audio Stream Type 17
6.8 Descriptors 17
6.8.1 AC-3 Audio Descriptor 17
6.8.2 Program Smoothing Buffer Descriptor 17
6.8.3 ISO-639 Language Descriptor 18
6.8.4 ATSC Private Information Descriptor 18
6.8.5 Enhanced Signaling Descriptor 19
6.9 PID Value Assignments 21
6.10 Extensions to the MPEG-2 Systems Specification 22
6.10.1 Scrambling Control 22
7. FEATURES OF 13818-1 NOT SUPPORTED BY THIS STANDARD 22
7.1 Program Streams 22
7.2 Still Pictures 22
8. TRANSPORT SUBSYSTEM INTERFACES AND BIT RATES 22
8.1 Transport Subsystem Input Characteristics 22
8.2 Transport Subsystem Output Characteristics 23
9. PACKET DELIVERY TO THE E-VSB AND VSB MODULATION SYSTEM 23
9.1 Head End Reference Model 23
9.2 Receiver Reference Model 24
9.3 Stream Delays 25
9.4 PCR Correction 26
9.5 Packet Ordering 26
9.6 Main Stream Packet Jitter Handling (Informative) 26

Exhibit 1015
TCL v. Maxell - IPR2025-00134
Page 72 of 136

Index of Tables and Figures

Table 6.1 ATSC Private Information Descriptor 19
Table 6.2 Bit Stream Syntax for the Enhanced Signaling Descriptor 20
Table 6.3 Linkage Preference Values 21
Table 6.4 Transmission Method Values 21
Table 6.5 Transport Scrambling Control Field 22

Figure 5.1 Sample organization of functionality in a transmitter-receiver pair for a single program. 8
Figure 9.1 Head end reference model. 24
Figure 9.2 Reference receiver model. 25

Exhibit 1015
TCL v. Maxell - IPR2025-00134
Page 73 of 136

ATSC Digital Television Standard – Part 3: Service Multiplex and Transport Subsystem Characteristics

1. SCOPE

This part of the ATSC Digital Television Standard constitutes the normative specification for the transport subsystem of the Digital Television Standard. The syntax and semantics of this specification conform to ISO/IEC 13818-1 [3], with additional constraints and conditions specified in this standard. Within this context, other ATSC standards may further constrain and/or supplement the transport subsystem specification.[1]

2. REFERENCES

At the time of publication, the editions indicated were valid. All standards are subject to revision and amendment, and parties to agreements based on this standard are encouraged to investigate the possibility of applying the most recent editions of the documents listed below.

2.1 Normative References

The following documents contain provisions that in whole or in part, through reference in this text, constitute provisions of this standard.

[1] ATSC: "Digital Audio Compression (AC-3, E-AC-3) Standard," Doc. A/52B, Advanced Television Systems Committee, Washington, D.C., 14 June 2005.

[2] ATSC: "Program and System Information Protocol for Terrestrial Broadcast and Cable," Doc. A/65C with Amendment No. 1, Advanced Television Systems Committee, Washington, D.C., 2 January 2006 (Amendment No. 1 dated 9 May 2006).

[3] ISO: "ISO/IEC IS 13818-1:2000 (E), International Standard, Information technology – Generic coding of moving pictures and associated audio information: systems."

2.2 Informative References

[4] ATSC: "ATSC Digital Television Standard, Part 2 – RF/Transmission System Characteristics," Doc. A/53, Part 2:2007, Advanced Television Systems Committee, Washington, D.C., 3 January 2007.

[5] ATSC: "ATSC Digital Television Standard, Part 5 – AC-3 Audio System Characteristics," Doc. A/53, Part 5:2007, Advanced Television Systems Committee, Washington, D.C., 3 January 2007.

[6] ATSC: "Data Broadcast Standard," Doc. A/90 with Amendment No. 1 and Corrigendum No. 1 and No. 2, Advanced Television Systems Committee, Washington, D.C., 26 July 2000 (Amendment 1 dated 14 May 2002; Corrigendum 1 and 2 dated 1 April 2002).

[7] ATSC: "Digital Television Standard, Part 1 – Digital Television System," Doc. A/53-1:2007, Advanced Television Systems Committee, Washington, D.C., 3 January 2007.

[1] Note that there is a coordinated effort underway among ATSC, CEA, and SMPTE to revise and clarify standards related to delivering closed captions, AFD, and bar data so that each describes the aspects of the system for which they are primarily responsible without overlap. This effort is expected to result in revisions of those sections in the ATSC Standards.

Exhibit 1015
TCL v. Maxell - IPR2025-00134
Page 74 of 136

3. COMPLIANCE NOTATION

As used in this document, "shall" denotes a mandatory provision of the standard. "Should" denotes a provision that is recommended but not mandatory. "May" denotes a feature whose presence does not preclude compliance that may or may not be present at the option of the implementer.

3.1 Treatment of Syntactic Elements

This document contains symbolic references to syntactic elements used in the audio, video, and transport coding subsystems. These references are typographically distinguished by the use of a different font (e.g., restricted), may contain the underscore character (e.g., sequence_end_code) and may consist of character strings that are not English words (e.g., dynrng).

3.2 Symbols, Abbreviations, and Mathematical Operators

The symbols, abbreviations, and mathematical operators used herein are as found in Section 3.4 of ATSC A/53 Part 1 [7].

4. DEFINITION OF TERMS

PAT-E – A table with the same syntax as Program Association Table as defined by ISO/IEC 13818-1 [3] transmitted using an enhanced VSB mode defined in A/53-2 [4].

PMT-E – A table with the same syntax as Program Map Table as defined by ISO/IEC 13818-1 [3] transmitted using an enhanced VSB mode defined in A/53-2 [4].

PMT-E_PID – A PID that identifies the Transport Stream packets that carry TS_program_map_section()s in a TS-E.

Program – Program shall mean the collection of all elements within the emission that have the same program number, independent of the methods used to propagate the program elements.

Linked – Alternative elements of a Program are 'Linked' when they have identical values in the linked_component_tag field of their Enhanced Signaling Descriptors.

TS-M – The portion of TS-R that contains only all Transport Stream packets transmitted by the main mode (see A/53-2 [4]) (see Figure 9.2).

TS-R – The recombined Transport Stream containing all Transport Stream packets delivered by all transmission modes (main, one-half rate and one-quarter rate) (see A/53-2 [4]) (see Figure 9.2).

TS-E – The portion of TS-R that contains only all Transport Stream packets transmitted by one-half rate and/or one-quarter rate modes (see A/53-2 [4]) (see Figure 9.2).

TS-Ea – The portion of TS-E that contains only all Transport Stream packets transmitted by one-half rate mode (see A/53-2 [4]) (see Figure 9.2).

TS-Eb – The portion of TS-E that contains only all Transport Stream packets transmitted by one-quarter rate mode (see A/53-2 [4]) (see Figure 9.2).

5. SYSTEM OVERVIEW

The transport format and protocol for the Digital Television Standard is a compatible subset of the MPEG-2 Systems specification defined in ISO/IEC 13818-1 [3]. It is based on a fixed-length

Exhibit 1015
TCL v. Maxell - IPR2025-00134
Page 75 of 136

packet transport stream approach that has been defined and optimized for digital television delivery applications.

As illustrated in Figure 5.1, the transport subsystem resides between the application (e.g., audio or video) encoding and decoding functions and the transmission subsystem. The encoder's transport subsystem is responsible for formatting the coded elementary streams and multiplexing the different components of the program for transmission. It also is responsible for delivering packets intended for transmission using coding methods defined in A/53-2 [4]. A receiver recovers the elementary streams for the individual application decoders and for the corresponding error signaling. The transport subsystem also incorporates other higher protocol layer functionality related to properly timing the packets to enable receiver synchronization.

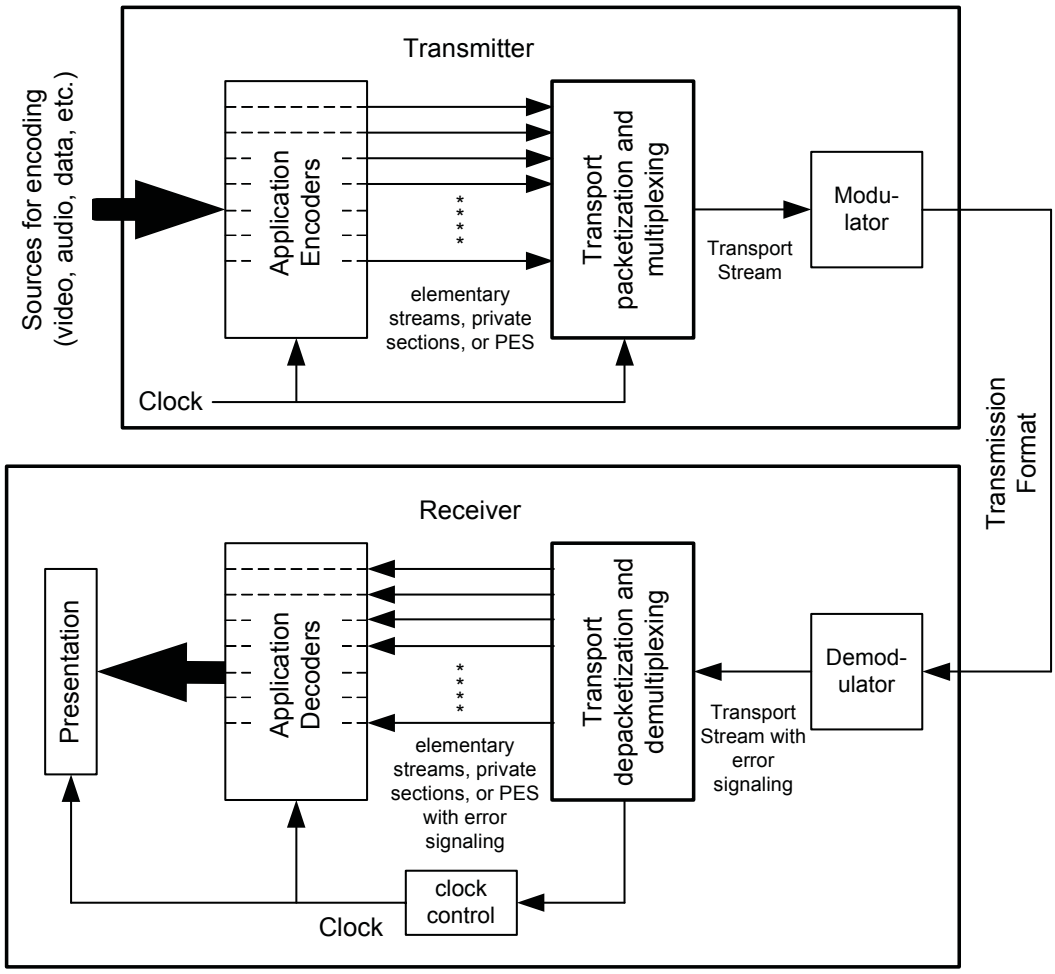

Figure 5.1 Sample organization of functionality in a transmitter-receiver pair for a single program.

One approach to describing the system multiplexing approach is to consider it as a combination of multiplexing at two different layers. In the first layer, single program transport streams are formed by multiplexing Transport Stream (TS) packets from one or more Packetized Elementary Stream (PES) and/or private section (ISO/IEC 13818-1 [3] Table 2-30) sources. In the second layer, one or more single program transport streams are combined to form a service

Exhibit 1015
TCL v. Maxell - IPR2025-00134
Page 76 of 136

multiplex of programs (also known as a multi-program transport stream in the MPEG-2 Systems standard, and a Digital Television Standard multiplexed bit stream in this ATSC standard). Program Specific Information (PSI), carried within Transport Stream packets, relates to the identification of programs and the components of each program.

In specifying the characteristics of the signal processing required of a system based upon this standard, the functions to be performed may be described in terms of encoders and multiplexers at the transmitting end and in terms of a Reference Receiver at the receiving end. A Reference Receiver is defined such that it performs the functions described in the way that they are described herein, which may or may not be the way in which actual receivers, built to this standard, are designed to operate. Some mandatory transmission requirements are stated herein in terms of the resulting transmission stream elements that are required to be produced, through use of the Reference Receiver functional definition.

6. SPECIFICATION

This section of the standard describes the coding constraints that apply to the use of the MPEG-2 systems specification [3] in the digital television system including mandatory main and optional enhanced services.

6.1 MPEG-2 Systems Standard

The transport subsystem shall comply with the transport stream definition of the MPEG-2 Systems standard as specified in ISO/IEC 13818-1 [3] and shall be further constrained as specified herein. Program shall mean the collection of all elements within the emission that have the same value of MPEG-2 program_number, independent of the methods used to propagate the program elements.

6.1.1 Video T-STD

Video streams in TS-R (Figure 3) shall conform to the T-STD as defined in Sections 2.4.2.2 and 2.4.2.3 of ISO/IEC 13818-1 [3] and shall follow the constraints for the level encoded in the video elementary stream. When there is a video stream of stream_type 0x02 in TS-R, the T-STD buffer *Bn* defined in ISO/IEC 13818-1 [3], Section 2.4.2 shall apply[2] for such a stream.

When a TS-E is present, video streams of stream_type 0x02 may need to be constructed with constraints on the buffer size of the T-STD as defined in Section 2.4.2 of ISO/IEC 13818-1 [3] so that the variable time delay caused by the E-VSB system does not result in a violation of the requirement that the TS-R conform per the preceding paragraph.

When there is a video stream of stream_type 0x02 in TS-E, the T-STD buffer *Bn* defined in ISO/IEC 13818-1 [3] Section 2.4.2 for the stream in TS-E may underflow when the low_delay flag in the video sequence header is set to '1' (per ISO/IEC 13818-1 [3], Section 2.4.2.6). When the low_delay flag in the video sequence header is set to '1' for this TS-E stream, [3] at Section 2.4.2.6 requires that the delay of data through the STD buffer defined by $td_n(j) - t(i)$ is <= 1 second except for still picture video data where $td_n(j) - t(i)$ is <= 60 sec, for all bytes contained in access unit j. The terms $td_n(j)$, $t(i)$, and j are those defined in ISO/IEC 13818-1 [3], Section 2.4.2. Any elementary stream containing Still Picture data shall include a video_stream_descriptor() in

[2] Section 7.2 also constrains video streams of stream_type 0x02 in TS-M.

Exhibit 1015
TCL v. Maxell - IPR2025-00134
Page 77 of 136

accordance with ISO/IEC 13818-1 [3] Section 2.6.2 and shall have the value of the field still_picture_flag set to '1' and the interval between I frames shall not be greater than 60 seconds.

6.1.2 Audio T-STD

6.1.2.1 Audio T-STD When TS-E is Not Present

The audio T-STD shall comply with Section 3.6 of Annex A of ATSC Standard A/52 [1].

6.1.2.2 Audio T-STD When TS-E is Present

Audio streams of stream_type 0x81 in TS-R (Figure 9.2) shall conform to the T-STD as defined in Sections 2.4.2 and 2.4.2.3 of ISO/IEC 13818-1 [3], with the buffer size BSn = 2592 bytes.

Audio streams of stream_type 0x87 (enhanced AC-3) shall conform to the T-STD as defined in Sections 2.4.2 and 2.4.2.3 of ISO/IEC 13818-1 [3], with the buffer size BSn = 5184 bytes.

6.1.3 Program Constraints

This section standardizes how to carry Programs[3] in the ATSC system. Each Program shall be constrained to contain certain standardized elementary streams, which are dependent on the service_type[4] associated with that Program and the use of TS-E. Programs may also contain private elementary streams as defined herein and/or by other ATSC standards.

6.1.3.1 ATSC Digital Television (service_type 0x02)

For Programs of service_type 0x02, if there is a video program element in the TS-E, the stream_type for that video program element shall be 0x02 and the video Elementary Stream shall be based on the same video content[5] as a video program Elementary Stream in TS-M. In addition, for any given Program of service_type 0x02:

- There shall be at most one video program element present in TS-M.
- There shall be at most one video program element present in TS-Ea.
- There shall be at most one video program element present in TS-Eb.

If there is one or more audio program element in the TS-E, the stream_type for each audio Elementary Stream in TS-E shall be 0x81 or 0x87 and each program element shall be based upon the same audio source as an audio element of the Program in TS-M.

6.1.3.2 ATSC Audio (service_type 0x03)

For Programs of service_type 0x03 that include audio program elements in both TS-M and TS-E, the stream_type for each audio Elementary Stream in TS-E shall be 0x81 or 0x87 and each program element shall be based upon the same audio source as an audio element of the Program in TS-M.

6.1.3.3 Unassociated/Small Screen Service (service_type 0x06)

An additional type of television service is reserved for use in TS-E called "unassociated/small screen service," which shall use service_type 0x06. An unassociated/small screen service carries

[3] Program is defined in Section 3.

[4] This field is defined in A/65 [2], Section 6.3.1 and Table 6.7.

[5] The video in the TS-E may be a different aspect ratio, frame rate, and/or bitrate than that in TS-M.

Exhibit 1015
TCL v. Maxell - IPR2025-00134
Page 78 of 136

programming whose contents are not based on the same schedule of programming as that carried in TS-M. Programs of service_type 0x06 shall be announced in TS-E and all program elements shall be carried only in TS-E. Further constraints on program elements for service_type 0x06 are to be defined at a future date.

6.2 Identification of MPEG-2 Private Ranges

ATSC defines code points in the MPEG-2 user private range and may define code points private to ATSC users within this range.

6.2.1 MPEG-2 Registration Descriptor

Under circumstances as defined below, this standard uses the MPEG-2 Registration Descriptor described in Sections 2.6.8 and 2.6.9 of ISO/IEC 13818-1 [3] to identify the contents of programs and program elements to decoding equipment. No more than one MPEG-2 Registration Descriptor shall appear in any given descriptor loop.

The presence of an MPEG-2 Registration Descriptor in any descriptor loop shall not affect the meaning of any other descriptor(s) in the same descriptor loop. The ATSC Private Information Descriptor (defined in Section 6.8.4) shall be the method to carry descriptor-based information associated with a private entity.

6.2.1.1 Program Identifier

Programs that conform to ATSC standards may be identified by use of an MPEG-2 Registration Descriptor (as defined in Sections 2.6.8 and 2.6.9 of ISO/IEC 13818-1 [3]). When present for this purpose, the MPEG-2 Registration Descriptor shall be placed in the descriptor loop immediately following the program_info_length field of the TS_program_map_section() describing this program and the format_identifier field of this MPEG-2 Registration Descriptor shall have a value 0x4741 3934 (“GA94” in ASCII).

6.2.1.2 Audio Elementary Stream Identifier

The presence of audio elementary streams of stream_type 0x81 that conform to ATSC standards may be indicated by use of an MPEG-2 Registration Descriptor (as defined in Sections 2.6.8 and 2.6.9 of ISO/IEC 13818-1 [3]). When present for this purpose, the MPEG-2 Registration Descriptor shall be placed in the descriptor loop immediately following the ES_info_length field in the TS_program_map_section() for each program element of stream_type 0x81 (AC-3 audio) and the format_identifier field of the MPEG-2 Registration Descriptor shall have a value 0x4143 2D33 (“AC-3” in ASCII).

6.2.1.3 Other Program Element Identifiers

Any program element carrying content not described by an approved ATSC standard shall be identified with an MPEG-2 Registration Descriptor (as defined in Sections 2.6.8 and 2.6.9 of ISO/IEC 13818-1 [3]). The format_identifier field of the MPEG-2 Registration Descriptor shall be registered with the SMPTE Registration Authority, LLC[6]. The descriptor shall be placed in the descriptor loop immediately following the ES_info_length field in the TS_program_map_section() for each such non-standard program element.

[6] The ISO/IEC-designated registration authority for the format_identifier is SMPTE Registration Authority, LLC. See (http://www.smpte-ra.org/mpegreg.html).

Exhibit 1015
TCL v. Maxell - IPR2025-00134
Page 79 of 136

6.3 Audio Constraints

For each Program of service_type 0x02 delivered in TS-M, if audio is present, at least one audio component shall be a complete main audio service (CM)[7].

For each Program of service_type 0x03 delivered in TS-M, at least one audio component shall be a complete main audio service (CM).

For each Program of service_type 0x02 completely delivered in TS-E, if audio is present, at least one audio component shall be a complete main audio service (CM).

For each Program of service_type 0x03 completely delivered in TS-E, at least one audio component shall be a complete main audio service (CM).

Audio program elements within one Program with the same value of linked_component_tag (defined in Section 6.8.5) shall be of the same audio service type (for example CM, VI, or HI)[8].

6.4 Constraints on PSI

All Program elements in the Transport Stream shall be described in the PSI.

6.4.1 Constraints on Main Services' Program Specific Information

There are the following constraints on the PSI information in TS-M:

- Transport Stream packets identified by a particular PMT_PID value shall be constrained to carry only one program definition, as described by a single TS_program_map_section(). For terrestrial broadcast applications, these Transport Stream packets shall be further constrained to carry no other kind of PSI table.
- The Transport Stream shall be constructed such that the time interval between the byte containing the last bit of the TS_program_map_section() containing television program information and successive occurrences of the same TS_program_map_section() shall be less than or equal to 400 milliseconds.
- The program numbers are associated with the corresponding PMT_PIDs in the Program Association Table (PAT). The Transport Stream shall be constructed such that the time interval between the byte containing the last bit of the program_association_section() and successive occurrences of the program_association_section() shall be less than or equal to 100 milliseconds. However, when program_association_section()s, CA_section()s, and TS_program_map_section()s are approaching their maximum allowed sizes, the potential exists to exceed the 80,000 bps rate specified in ISO/IEC 13818-1 [3] Section 2.4.2.3. In cases where the table section sizes are such that the 100 millisecond repetition rate of the program_association_section() would cause the 80,000 bps maximum rate to be exceeded, the time interval between the byte containing the last bit of the program_association_section() may be increased but in no event shall exceed 140 milliseconds, so that under no circumstances the limit of 80,000 bps is exceeded.
- When an Elementary Stream of stream_type 0x02 (MPEG-2 video) is present in the Transport Stream, the data_stream_alignment_descriptor() (described in Section 2.6.10 of ISO/IEC 13818-1 [3]) shall be included in the descriptor loop immediately following the

[7] CM is defined in Section 6 of A/53-5 [5].

[8] Audio service types are defined in Section 6 of A/53-5 [5] and should not be confused with the service_type field defined in A/65 [2].

Exhibit 1015
TCL v. Maxell - IPR2025-00134
Page 80 of 136

ES_info_length field in the TS_program_map_section() describing that Elementary Stream. The descriptor_tag value shall be set to 0x06, the descriptor_length value shall be set to 0x01, and the alignment_type value shall be set to 0x02 (video access unit).

- Adaptation headers shall not occur in Transport Stream packets identified by a program_map_PID value for purposes other than for signaling with the discontinuity_indicator that the version_number (Section 2.4.4.9 of ISO/IEC 13818-1 [3]) may be discontinuous.
- Adaptation headers shall not occur in Transport Stream packets identified by PID 0x0000 (the PAT PID) for purposes other than for signaling with the discontinuity_indicator that the version_number (Section 2.4.4.5 of ISO/IEC 13818-1 [3]) may be discontinuous.
- This standard does not define a Network Information Table (NIT) as specified in MPEG-2 Systems. The use of program_number 0x0000 should be avoided as MPEG-2 Systems reserves this value for the network_PID, which in turn is used to identify the TS packets of a NIT.

6.4.2 PAT-E

Sections of the PAT-E shall be carried in one or more program_association_section()s within TS-E packets and shall be identified by the PID 0x1FF7 and shall only reference PMT_PID values for TS_program_map_section()s present in Transport Stream packets in TS-E. Sections of the PAT-E shall be present only in the TS-Eb when TS-Eb is present.

6.4.3 PMT-E

Sections of PMT-E shall be carried in TS_program_map_section()s within TS-E packets identified by the PAT-E and shall only reference PID values for packets that are present in the TS-E. Sections of PMT-E shall be present only in the TS-Eb when TS-Eb is present.

6.4.4 Multiple PCR_PIDs per Program and a Common Time Base

For every Program that includes program elements in both TS-M and TS-E, there is a TS_program_map_section() carried in TS-M and a TS_program_map_section() carried in TS-E with a common value of program_number. For such a Program, each of the PCRs referenced by the PCR_PID fields in the two TS_program_map_section()s shall be samples from a common time clock. Note that a PCR_PID value of 0x1FFF has the same meaning as in ISO/IEC13818-1 [3] Section 2.4.4.9.

6.4.5 Constraints on Optional Enhanced Services' Program Specific Information

There are the following constraints on the PSI information in TS-E:

- Only one Program shall be described in a transport bit stream for TS_program_map_section()s carried in packets with a particular PMT-E_PID value. Transport stream packets containing a TS_program_map_section() and identified with a particular PID value shall not be used to transmit any other kind of PSI table (identified by a different table_id).
- TS-E should be constructed such that the time interval between the byte containing the last bit of the TS_program_map_section() containing television program information and successive occurrences of the same TS_program_map_section() should be less than or equal to 1600 milliseconds.
- The program numbers referenced in the PAT-E shall be associated with the corresponding PMT-E_PIDs in the collection of program_association_section()s, which are sections of the PAT-E. The sections that make up the PAT-E shall be carried in packets

Exhibit 1015
TCL v. Maxell - IPR2025-00134
Page 81 of 136

identified with the PID 0x1FF7. The TS-E should be constructed such that the time interval between the byte containing the last bit of the program_association_section() and successive occurrences of the program_association_section() should be less than or equal to 800 milliseconds.

- When the video elementary stream_type is equal to 0x02 the descriptor loop immediately following ES_info_length in the TS_program_map_section() shall contain the data_stream_alignment_descriptor() described in Section 2.6.10 of ISO/IEC 13818-1[3] and the alignment_type field shown in Table 2-47 of ISO/IEC 13818-1 shall be 0x02.
- Adaptation headers shall not occur in Transport Stream packets of the PMT-E_PID for purposes other than for signaling with the discontinuity_indicator that the version_number (Section 2.4.4.5 of ISO/IEC 13818-1) may be discontinuous.

6.5 PES Constraints

Packetized Elementary Stream syntax and semantics shall be used to encapsulate the audio and video elementary stream information. The Packetized Elementary Stream syntax is used to convey the Presentation Time-Stamp (PTS) and Decoding Time-Stamp (DTS) information required for decoding audio and video information with synchronism. This section describes the coding constraints on this MPEG-2 Systems layer.

Within the PES packet header, the following restrictions shall apply:

- PES_scrambling_control shall be coded as ‘00’.
- ESCR_flag shall be coded as ‘0’.
- ES_rate_flag shall be coded as ‘0’.
- PES_CRC_flag shall be coded as ‘0’.

Within the PES packet extension, the following restrictions shall apply.

- PES_private_data_flag shall be coded as ‘0’.
- pack_header_field_flag shall be coded as ‘0’.
- program_packet_sequence_counter_flag shall be coded as ‘0’.
- P-STD_buffer_flag shall be coded as ‘0’.

6.5.1 MPEG-2 Video PES Constraints (for streams of stream_type 0x02)

Each PES packet shall begin with a video access unit, as defined in Section 2.1.1 of ISO/IEC 13818-1 [3], which shall be aligned with the PES packet header. The first byte of a PES packet payload shall be the first byte of a video access unit. Each PES header shall contain a PTS. Additionally, it shall contain a DTS as appropriate. For terrestrial broadcast, the PES packet shall not contain more than one coded video frame, and shall be void of video picture data only when transmitted in conjunction with the discontinuity_indicator to signal that the continuity_counter may be discontinuous.

Within the PES packet header, the following restrictions apply:

- The PES_packet_length shall be coded as 0x0000
- data_alignment_indicator shall be coded as ‘1’

Exhibit 1015
TCL v. Maxell - IPR2025-00134
Page 82 of 136

6.5.2 AC-3 Audio PES Constraints (for Streams of stream_type 0x81)

The AC-3 audio decoder may be capable of simultaneously decoding more than one elementary stream containing different program elements, and then combining the program elements into a complete program. In this case, the audio decoder may sequentially decode audio frames (or audio blocks) from each elementary stream and do the combining (mixing together) on a frame or (block) basis. In order to have the audio from the two elementary streams reproduced in exact sample synchronism, it is necessary for the original audio elementary stream encoders to have encoded the two audio program elements frame synchronously; i.e., if audio program 1 has sample 0 of frame *n* at time *t*0, then audio program 2 should also have frame *n* beginning with its sample 0 at the identical time *t*0. If the encoding is done frame synchronously, then matching audio frames should have identical values of PTS.

If PES packets from two AC-3 audio services that are to be decoded simultaneously contain identical values of PTS then the corresponding encoded audio frames contained in the PES packets should be presented to the audio decoder for simultaneous synchronous decoding. If the PTS values do not match (indicating that the audio encoding was not frame synchronous) then the audio frames that are closest in time may be presented to the audio decoder for simultaneous decoding. In this case, the two services may be reproduced out of sync by as much as one-half of a frame time (which is often satisfactory; e.g., a voice-over does not require precise timing).

The value of stream_id for AC-3 shall be '1011 1101' (private_stream_1).

6.5.3 Audio PES Constraints for Enhanced AC-3 (stream_type = 0x87)

The value of stream_id for enhanced AC-3 shall be '1011 1101' (private_stream_1).

If an audio service is delivered in TS-E, and is Linked to an audio service delivered in TS-M, constraints are required on the content of the corresponding audio access units, and on the PTS values in the corresponding PES packets, of the two Linked audio services in order to enable a receiver to perform sample time synchronous switching between the two audio services (e.g., fallback audio).

The constraints are:

1) That the audio access units of AC-3 in TS-M, and the corresponding audio access units of enhanced AC-3 in TS-E shall be constructed from sets of input audio samples that are time synchronous; and
2) That the presentation times corresponding to the corresponding audio access units shall be identical.

Note that not every audio access unit has an explicit value of PTS in a PES because there is only one PTS per PES while there can be multiple audio access units per PES. However, there is a unique presentation time for each audio access unit, and it is the presentation times that must be identical to enable a receiver to switch between the two audio streams with exact sample synchronism.

6.6 Services and Features

6.6.1 System Information and Program Guide

Transport Streams shall include system information and program guide data formatted according to the structure and syntax described in ATSC Standard A/65 "Program and System Information Protocol for Terrestrial Broadcast and Cable" [2]. System information and program guide data

Exhibit 1015
TCL v. Maxell - IPR2025-00134
Page 83 of 136

shall be conveyed in Transport Stream packets of PID 0x1FFB, which shall be reserved exclusively for this purpose. System information provides data necessary for navigation among digital service offerings. The program guide database allows a receiver to build an on-screen grid of program information for the various services that may be available.

6.6.1.1 SI base_PID for TS-M

System information and program guide data shall be conveyed in Transport Stream packets of PID 0x1FFB, which shall be reserved exclusively within TS-R (Figure 9.2) for this purpose.

6.6.1.2 SI base_PID for TS-E

System information and program guide data shall be conveyed in TS-E packets of PID 0x1FF9, which shall be reserved exclusively within TS-R (Figure 9.2) for this purpose.

6.6.1.3 System Information and Program Guide STD Model

The STD model for program guide and system information is specified in ATSC Standard A/65 [2].

6.6.2 Specification of ATSC Private Data

Within the ATSC set of standards, private data may be transported by various means:

1) **Data services** – Carriage of ATSC data services including system information shall be as documented in applicable ATSC standards. See for example the ATSC A/90 Data Broadcast Standard [6].
2) **Private program elements** – The stream_type codes in the range 0xC4 to 0xFF shall be available for stream types defined privately (not described by ATSC standards). Such privately-defined program elements are associated with an MPEG-2 Registration Descriptor (see Section 6.2.1.3).
3) **Adaptation fields** – Private data may be transmitted within the adaptation field of Transport Stream packets (Sections 2.4.3.4 and 2.4.3.5 of ISO/IEC 13818-1 [3]). Program elements that include private data in the adaptation fields of their Transport Stream packets shall be associated with an MPEG-2 Registration Descriptor (see Section 6.2.1.3).

6.7 Assignment of Identifiers

In this section, those identifiers and codes that shall have a fixed value are summarized. These include PES Stream IDs and Descriptors. Stream_type codes for program element types managed by the ATSC Code Points Registrar (currently assigned or available for future assignment) shall be in the range 0x80 to 0xC3. Stream_type code 0x81 has already been assigned within the Digital Television Standard (see Section 6.7.1). Those descriptor_tag codes managed by the ATSC Code Points Registrar (currently assigned or available for future assignment) shall be in the range 0x40 to 0xEF.

6.7.1 AC-3 Audio Stream Type

The stream_type value for AC-3 audio program elements shall be 0x81.

6.7.2 MPEG-2 Video Stream Type

The stream_type value for MPEG-2 video program elements shall be as defined in ISO/IEC 13818-1 [3] which value is 0x02.

Exhibit 1015
TCL v. Maxell - IPR2025-00134
Page 84 of 136

6.7.3 Enhanced AC-3 Audio Stream Type

The stream_type value for the enhanced AC-3 audio program element defined in A/52 [1] Annex E shall be 0x87.

6.8 Descriptors

Unless explicitly stated to the contrary for a given descriptor, no more than one descriptor with a given value of descriptor_tag shall appear in any descriptor loop.

6.8.1 AC-3 Audio Descriptor

When an Elementary Stream of stream_type 0x81 (AC-3 audio) or stream_type 0x87 (E-AC-3) is present in the digital television Transport Stream, an AC-3 Audio Descriptor (AC-3_audio_stream_descriptor()) shall be included in the descriptor loop immediately following the ES_info_length field in the TS_program_map_section() describing that Elementary Stream. The syntax shall be as given in Table A2 of Annex A of ATSC Standard A/52 [1]. The following constraints shall apply to the AC-3 Audio Descriptor:

1) The value of the descriptor_tag shall be 0x81.
2) The 6-bit field for Bit Rate Code shall have a value in the range '000000' through '001111' or '100000' through '101111'; i.e., signaling a bit rate less than or equal to 448 kbps.
3) The num_channels field shall have a value in the range 1 to 13.
4) The langcod field is a reserved field. Audio language shall be indicated using an ISO-639 Language Descriptor (see Section 6.8.3).
5) The descriptor shall identify the type of the audio service in the bsmod field, which shall be the same as the bsmod field in the elementary stream associated with this descriptor.
6) The descriptor may optionally carry a 3-byte language code that is represented per ISO-639. If this language code is present in the AC-3_audio_stream_descriptor(), it shall match the language code carried in the ISO_639_language_descriptor(), if present.

Effective 1 March 2008, audio language shall be indicated by including the optional ISO-639 Language bytes within the AC-3_audio_stream_descriptor(), at which point the use of the ISO-639 Language Descriptor to indicate language shall be optional, but recommended to support legacy devices requiring the ISO-639_language_descriptor().

> *Informative note:* Receiving devices are expected to use the bsmod (bit stream mode) field in the AC-3_audio_stream_descriptor() to determine the type of each AC-3 or E-AC-3 audio stream rather than the audio_type field in the ISO_639_language_descriptor().

6.8.2 Program Smoothing Buffer Descriptor

The TS_program_map_section() of each program shall contain a smoothing buffer descriptor pertaining to that program in accordance with Section 2.6.30 of ISO/IEC 13818-1. During the continuous existence of a program, the value of the elements of the smoothing buffer descriptor shall not change.

The fields of the smoothing buffer descriptor shall meet the following constraints:

Exhibit 1015
TCL v. Maxell - IPR2025-00134
Page 85 of 136

- The field sb_leak_rate shall be allowed to range up to the maximum transport rates specified in Section 7.2.
- The field sb_size shall have a value less than or equal to 2048. The size of the smoothing buffer is thus ≤ 2048 bytes.

6.8.3 ISO-639 Language Descriptor

In the ATSC Digital Television System, the ISO_639_language_descriptor() defined in ISO/IEC 13818-1 [3] Section 2.6.18 shall be used to indicate the language of AC-3 audio (stream_type 0x81) or enhanced AC-3 (stream_type 0x87) Elementary Stream components.

Effective 1 March 2008, audio language, when indicated, shall be indicated by including the ISO-639 Language bytes within the AC-3_audio_stream_descriptor(), at which point the use of the ISO-639 Language Descriptor to indicate language shall be optional, but recommended to support legacy devices requiring the ISO-639_language_descriptor().

When used, the ISO_639_language_descriptor() shall be included in the descriptor loop immediately following the ES_info_length field in the TS_program_map_section() for each Elementary Stream of stream_type 0x81 (AC-3 audio) or 0x87 (enhanced AC-3 audio) or when the number of AC-3 or enhanced AC-3 audio Elementary Streams in the TS_program_map_section() having the same value of bit stream mode (bsmod in the AC-3 Audio Descriptor) is two or more.

> *Informative note:* As an example, consider an MPEG-2 program that includes two AC-3 audio ES components: a AC-3 Complete Main (CM) audio track (bsmod = 0) and a Visually Impaired (VI) audio track (bsmod = 2). Inclusion of the ISO_639_language_descriptor() is optional for this program. If a second CM track were to be added, however, it would then be necessary to include ISO_639_language_descriptor()s in the TS_program_map_section().

The audio_type field in any ISO_639_language_descriptor() used in this standard shall be set to 0x00 (meaning "undefined").

An ISO_639_language_descriptor() may be present in the TS_program_map_section() in other positions as well, for example to indicate the language or languages of a textual data service program element.

6.8.4 ATSC Private Information Descriptor

The ATSC_private_information_descriptor() provides a method to carry and unambiguously label private information. More than one ATSC_private_information_descriptor() may appear within a single descriptor loop. Table 6.1 defines the bit-stream syntax of the ATSC_private_information_descriptor().

Exhibit 1015
TCL v. Maxell - IPR2025-00134
Page 86 of 136

Table 6.1 ATSC Private Information Descriptor

Syntax	No. of Bits	Format
ATSC_private_information_descriptor() {		
descriptor_tag	8	0xAD
descriptor_length	8	uimsbf
format_identifier	32	uimsbf
for (i = 0; i < N; i++) {		
private_data_byte	8	bslbf
}		
}		

descriptor_tag – This 8-bit field is set to 0xAD.

descriptor_length – This 8-bit field specifies the number of bytes of the descriptor immediately following the descriptor_length field.

format_identifier – The format_identifier is a 32-bit field as defined in ISO/IEC 13818-1 [3], Section 2.6.9 for the registration_descriptor(). Only format_identifier values registered and recognized by the SMPTE Registration Authority, LLC shall be used (see http://www.smpte-ra.org/mpegreg.html)[9]. Its use in this descriptor shall scope and identify only the private information contained within this descriptor.

private_data_byte – The syntax and semantics of this field is defined by the assignee of the format_identifier value.

6.8.5 Enhanced Signaling Descriptor

The Enhanced Signaling Descriptor identifies the method of terrestrial broadcast transmission (main, one-half -rate, one-quarter rate)[10] of a program element, and when a program element is an alternative to another program element, is Linked to the alternative and indicates the broadcaster's preference. For example, an Enhanced Signaling Descriptor may indicate that although an audio stream is the same language and content as another, it is preferred for some reason.

The Enhanced Signaling Descriptor may be included in either descriptor loop in the TS_program_map_section() structure.

When the Enhanced Signaling Descriptor is only in the descriptor loop in the TS_program_map_section() just following the program_info_length field, the linkage_preference field shall have the value '00'. In this case the Enhanced Signaling Descriptor shall indicate the transmission method (tx_method) for every program element described in the TS_program_map_section() that does not have a separate instance of the Enhanced Signaling Descriptor included in the descriptor loop immediately following the ES_info_length field (see precedence rule below).

The Enhanced Signaling Descriptor shall be present for each program element that is Linked (linkage_preference not equal to '00') to another program element. Therefore the Enhanced

[9] SMPTE Registration Authority, LLC, 595 West Hartsdale Avenue, White Plains, NY 10607 USA.

[10] See ATSC A/53-2 [4] for definitions.

Exhibit 1015
TCL v. Maxell - IPR2025-00134
Page 87 of 136

Signaling Descriptor appears in TS_program_map_section()s in the TS-M, TS-Ea and TS-Eb to establish linkage.

When the Enhanced Signaling Descriptor is in the descriptor loop immediately following the ES_info_length field in the TS_program_map_section() then:

- No more than one alternative program element shall be referenced for any given program element.
- If the program element has the linkage_preference value of '00,' then the program element is not Linked.
- If the program element has the linkage_preference value of '01,' then the Linked alternative program element shall have the linkage_preference value of '01' and the two shall have identical values for program_number and shall have identical values for linked_component_tag.
- If the program element has the linkage_preference value of '10,' then the Linked alternative program element shall have the linkage_preference value of '11' and the two shall have identical values for program_number and shall have identical values for linked_component_tag.
- If the program element has the linkage_preference value of '11,' then the Linked alternative program element shall have the linkage_preference value of '10' and the two shall have identical values for program_number and shall have identical values for linked_component_tag.

If the Enhanced Signaling Descriptor is in both descriptor loops, the Enhanced Signaling Descriptor in the descriptor loop immediately following the ES_info_length field shall take precedence for the particular program element described therein.

An Enhanced Signaling Descriptor shall be present for each program element transmitted using one-half rate or one-quarter rate coding in either descriptor loop in the TS_program_map_section(), or both descriptor loops in the TS_program_map_section(), subject to the above precedence rule. The bit stream syntax for the Enhanced Signaling Descriptor is shown in Table 6.2.

Table 6.2 Bit Stream Syntax for the Enhanced Signaling Descriptor[11]

Syntax	No. of Bits	Format
enhanced_signaling_descriptor () {		
descriptor_tag	8	0xB2
descriptor_length	8	uimsbf
linkage_preference	2	uimsbf
tx_method	2	uimsbf
if (linkage_preference != '00')		
linked_component_tag	4	uimsbf
else		
reserved	4	'1111'
}		

[11] This descriptor may be extended in the future to provide additional capability by adding a byte loop after the last defined byte. Proposals to do so are expected to be considered in the future.

Exhibit 1015
TCL v. Maxell - IPR2025-00134
Page 88 of 136

descriptor_tag – This 8-bit unsigned integer shall have the value 0xB2, identifying this descriptor as an enhanced_signaling_descriptor.

descriptor_length – This 8-bit unsigned integer that shall indicate the length (in bytes) immediately following this field up to the end of this descriptor.

linkage_preference – This 2-bit bit field indicates whether or not the associated program element is Linked to another program element in the transmission. If so, it identifies the broadcaster's preference for the program element associated with this descriptor. The linkage_preference field shall be coded as defined in Table 6.3.

reserved – This 4 bit field shall contain all '1's.

Table 6.3 Linkage Preference Values

linkage_preference	Meaning
'00'	**not_linked** – This element is not Linked to any other program element in the transmission
'01'	**linked_no_preference** – There is no preference between Linked program elements
'10'	**linked_preferred** –This program element is preferred over the Linked program element
'11'	**linked_not_preferred** – The Linked program element is preferred over this program element

tx_method – This 2-bit field shall identify the VSB transmission method used to transmit the associated program element. See Table 6.4.

Table 6.4 Transmission Method Values

tx_method	Meaning
'00'	**main** – This program element transmitted using main coding
'01'	**half_rate** – This program element transmitted using rate-one-half enhanced coding
'10'	**quarter_rate** – This program element transmitted using rate-one-quarter enhanced coding
'11'	Reserved for signaling future transmission methods

linked_component_tag – A 4-bit unsigned integer that links the associated program element to an equivalent, preferred, or less preferred alternative. The Linked program element is the program element labeled with the same value of linked_component_tag in a TS_program_map_section labeled with an equivalent value of program_number as the TS_program_map_section that carries this descriptor. If the program element has the linkage_preference value equal to '00', then the program element is not Linked and the linked_component_tag value shall be reserved. See Table 6.2.

6.9 PID Value Assignments

In order to avoid collisions with fixed PID values and ranges already established in this and other international standards, transport_packet() PID field values are restricted as follows:

- TS packets identified with PID values in the range 0x1FF0 – 0x1FFE shall only be used to transport data compliant with ATSC-recognized standards specifying fixed-value PID assignments in that range. (Informative note: One such use is A/65, which requires the use of 0x1FFB to identify packets containing certain tables defined in that standard.)
- In order to avoid collisions with fixed PID values and ranges already established in this and other international standards, PID values used to identify Transport Stream packets

Exhibit 1015
TCL v. Maxell - IPR2025-00134
Page 89 of 136

carrying TS_program_map_section() or program elements shall not be set below 0x0030. (Informative note: One such use is in ETS 300 468, which requires the use of 0x0011 to identify packets containing certain tables defined in that standard.)

6.10 Extensions to the MPEG-2 Systems Specification

This Section covers extensions to the MPEG-2 Systems specification.

6.10.1 Scrambling Control

The scrambling control field within the packet header allows all states to exist in the digital television system as defined in Table 6.5.

Table 6.5 Transport Scrambling Control Field

transport_scrambling_control	**Function**
'00'	packet payload not scrambled
'01'	not scrambled, state may be used as a flag for private use defined by the service provider.
'10'	packet payload scrambled with "even" key
'11'	packet payload scrambled with "odd" key

Elementary Streams for which the transport_scrambling_control field does not exclusively have the value of '00' for the duration of the program must carry a CA_descriptor in accordance with Section 2.6.16 of ISO/IEC 13818-1 [3].

The implementation of a digital television delivery system that employs conditional access will require the specification of additional data streams and system constraints.

7. FEATURES OF 13818-1 NOT SUPPORTED BY THIS STANDARD

The transport definition is based on the MPEG-2 Systems standard, ISO/IEC 13818-1; however, it does not implement all parts of the standard. This section describes those elements that are omitted from or constrained by this standard.

7.1 Program Streams

This part of the ATSC Digital Television Standard does not include those portions of ISO/IEC 13818-1[3] and Annex A of ATSC Standard A/52 [1] that pertain exclusively to Program Stream specifications.

7.2 Still Pictures

This Annex does not include those portions of ISO/IEC 13818-1 Transport Stream specification that pertain to the Still Picture model for the main service (TS-M).

8. TRANSPORT SUBSYSTEM INTERFACES AND BIT RATES

8.1 Transport Subsystem Input Characteristics

The MPEG-2 Systems standard defines system coding at two hierarchical layers: The packetized elementary stream (PES) and the systems stream, either in Transport Stream or Program Stream format (the ATSC only uses the Transport Stream format). Under this standard and by common

Exhibit 1015
TCL v. Maxell - IPR2025-00134
Page 90 of 136

industry usage, private_section encapsulated data is a parallel layer to PES. Physical implementations may include the PES packetizer within a video, audio, or other data encoder; and a private_section encapsulator within a data encoder; and not as part of the transport subsystem. Therefore, the inputs to the transport subsystem may be elementary streams, PES packets, or private_section encapsulated data.

8.2 Transport Subsystem Output Characteristics

Conceptually, the output from the transport subsystem is a continuous MPEG-2 Transport Stream as defined in this document at a constant rate of T_r Mbps when transmitted in an 8 VSB system and $2T_r$ when transmitted in a 16 VSB system where

$$T_r = 2 \times \left(\frac{188}{208}\right)\left(\frac{312}{313}\right)\left(\frac{684}{286}\right) \times 4.5 = 19.39\ldots \text{ Mbps}$$

The symbol rate S_r in Msymbols per second for the transmission subsystem (see Section 5 of ATSC A/53-2 [4]) is

$$S_r = \left(\frac{684}{286}\right) \times 4.5 = 10.76\ldots \text{Msymbols per second}$$

T_r and S_r shall be locked to each other in frequency.

> Note: The signals in the source coding subsystems (see A/53-4, -5, and -6) and the signals in the transport/transmission subsystems (A/53-2 and -3) are not required to be frequency-locked to each other, and in many implementations will operate asynchronously. In such systems, the frequency drift can necessitate the occasional insertion or deletion of a null packet so that the transport subsystem accommodates the frequency disparity and thereby meets the requirement to remain locked with respect to the transmission subsystem symbol rate.

All Transport Streams conforming to this standard shall conform to the ISO/IEC 13818-1 [3] T-STD (Transport System Target Decoder) model.

9. PACKET DELIVERY TO THE E-VSB AND VSB MODULATION SYSTEM

This section describes a reference model for interfacing with the enhanced transmission system model as described in ATSC A/53-2 [4] and a receiver reference model. These models are used in specifying system constraints and requirements.

9.1 Head End Reference Model

The E-VSB exciter defined in ATSC A/53-2 [4] can accept three separate Input Streams (IS), one each for Transport Stream packets destined to be sent via each of the one-half rate (IS-Ea), one-quarter rate (IS-Eb) and main rate (IS-N) modes. As evinced by ATSC A/53-2 [4], only one of the three inputs has a Transport Stream packet at any one time.

Exhibit 1015
TCL v. Maxell - IPR2025-00134
Page 91 of 136

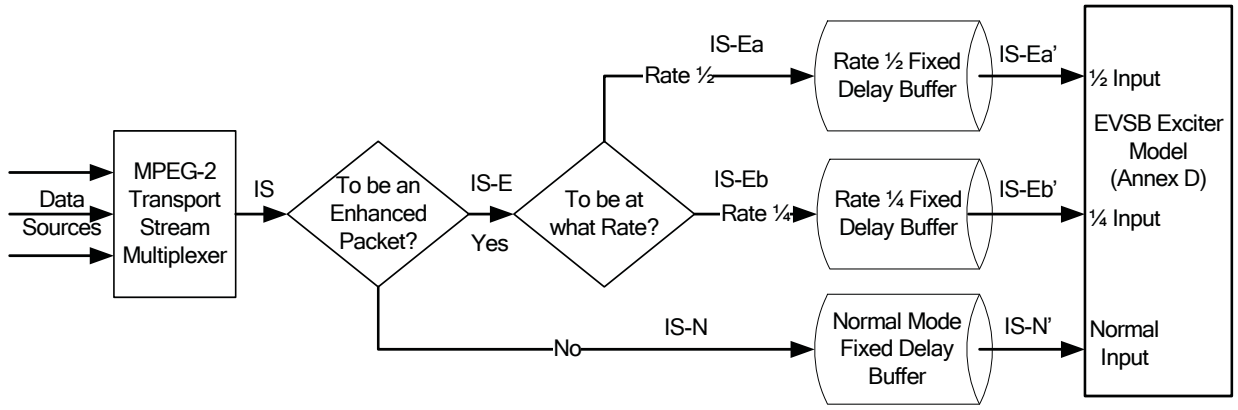

Figure 9.1 Head end reference model.

The above Head End Reference Model (Figure 9.1) models the data flow for Transport Stream packets from the final MPEG-2 multiplexer through logic and buffers and into the three exciter inputs (ATSC A/53-2 [4]).

The decisions about whether a packet is enhanced or not, and, if enhanced, which of one-quarter-rate or one-half-rate is to be used (as shown by diamond boxes in Figure 9.1), are made based on the PID value in each Transport Stream Packet. Special rules for certain streams (like PSIP-E data) may apply (see A/65 [2]).

The three fixed delay buffers shown in Figure 9.1 are utilized to effect a delay on each stream (IS-Ea, IS-Eb, IS-N) to compensate for the fixed variance of delivery time due to the additional interleaving and error correction applied to streams in IS-E. The magnitude of the delay on each stream (IS-Ea, IS-Eb, IS-N) that must be applied to the various streams varies by which MAP is being utilized.

The stream labeled "IS" in Figure 9.1 may be a MPEG-2 Transport Stream, but need not be. A Transport Stream has constraints and requirements on it as to timing that need not be met at IS, but shall be met at TS-R in the Receiver Reference Model. It is, however, at least "similar" to a MPEG-2 Transport Stream.

9.2 Receiver Reference Model

The modeled Reference Receiver (as shown in Figure 9.2) has zero processing time, has a packet selector and has additional de-interleaving for the enhanced data.

Exhibit 1015
TCL v. Maxell - IPR2025-00134
Page 92 of 136

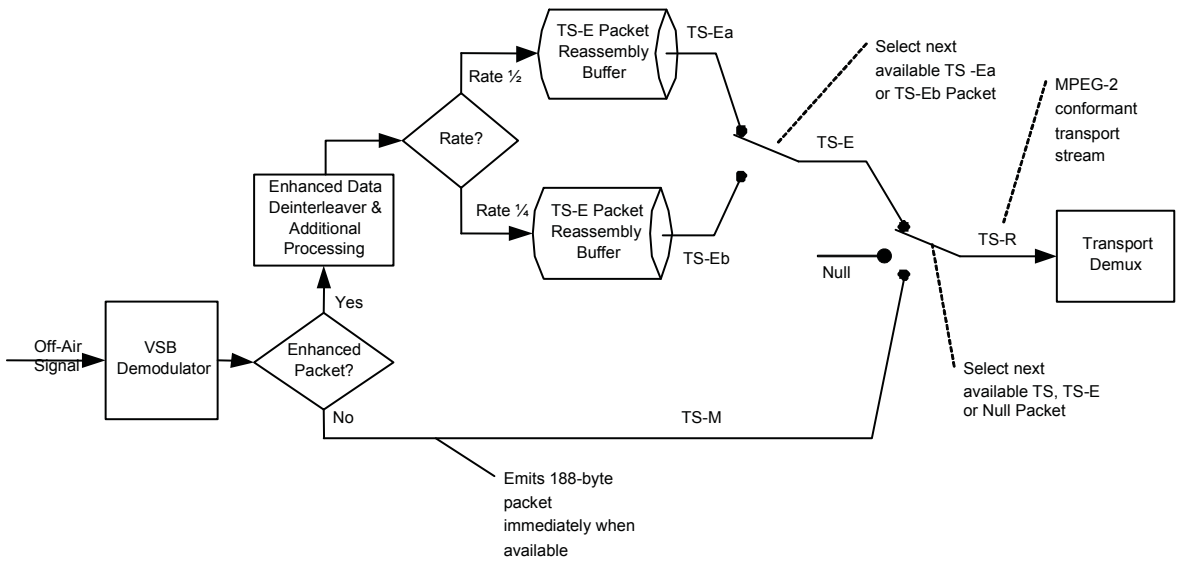

Figure 9.2 Reference receiver model.

The modeled Reference Receiver (as shown in Figure 9.2) has two 188-byte buffers that are filled by rate-one-quarter and rate-one-half data as they are recovered from the rate-one-quarter and rate-one-half E-VSB segments, respectively. The streams TS-Ea and TS-Eb contain the series of bytes from the respective TS-E reassembly buffers for each packet after it is assembled. At any time a buffer has an entire Transport Stream packet available for output (188 bytes), that buffer is selected by the switches and output immediately. The Reference Receiver does not reorder packets identified with a particular PID.

Note that due to the transmission system and the instantaneously modeled Reference Receiver behavior, it is not possible for more than one data source (TS-Ea, TS-Eb, or TS-M) to be emitting data at the same time. However, as it is possible for no data to be available at a given packet time, the Reference Receiver selects a Null packet for insertion, so that the output is at a constant packet rate[12] to deliver 19.39… Mbps.

The emitted E-VSB stream shall be ordered and coded such that when processed by the Reference Receiver, the output from the switch (TS-R) shall be an MPEG-2 Transport Stream compliant with Sections 1 through 7 of this Part of the ATSC Digital Television Standard. The PCRs shall be adjusted as described in Section 9.4.

TS-E is the portion of the E-VSB transmission that results in TS-E in the Reference Receiver of Figure 9.2.

9.3 Stream Delays

Some streams shall be delayed relative to other streams by a number of segment times to compensate for the additional processing of enhanced-mode streams. The actual values needed are dependent on the particular mix of the enhanced and main rates defined in ATSC A/53-2 [4] Section 5.6. Note that buffers of the below sizes are sufficient to accomplish this delay:

[12] This models a system that produces a constant rate packet stream output, however this may not be necessary in a real receiver.

Exhibit 1015
TCL v. Maxell - IPR2025-00134
Page 93 of 136

- One-half rate stream: 128 kB
- One-quarter rate stream: 128 kB
- Main stream: 3 MB

This delay compensates for the E-VSB interleaver delay and 164/188 byte packing delay.

9.4 PCR Correction

As the main, one-half rate, and one-quarter rate Transport Stream packet streams are combined for transmission, the order that the Transport Stream packets are received by the Reference Receiver from each of the Transport Stream packet streams will be different from original generation (and therefore they arrive at different times relative to one another). The time difference is dependent on the packet cadence resulting from a particular rate selection per Table 5.3 in ATSC A/53-2 [4]. Any Transport Stream packets that are received by the Reference Receiver in an order different from original generation and that carry PCRs require adjustment due to this time displacement and the packet placement within each data frame.

The PCRs of all packets shall be adjusted by the emission system to compensate for the variations in the packet delivery time as compared to the time multiplexed. The adjustment is based on the timing of a virtual model stream containing the combined packets of all three streams after recovery in the receiver. (Note that when no E-VSB stream is present, PCR correction for absolute packet timing occurs prior to the exciter.) This virtual stream represents the order in which the packets are provided to a reference decoder. The virtual stream is modeled as making each one-quarter rate and/or one-half rate 188-byte TS packet (recovered from 2 or 3 enhanced packets) available with no processing delay. The Reference Receiver has instantaneous processing.

The PCRs shall be adjusted by the transmission subsystem such that when processed by the Reference Receiver, the output from the switch (TS-R) has PCRs compliant with ISO13818-1 [3].

9.5 Packet Ordering

Within each packet stream that is identified with a particular PID, the packets identified by that PID shall not be reordered by the transmission subsystem.

9.6 Main Stream Packet Jitter Handling (Informative)

The packet timing issues described in this section are solely related to the data packing structure (at the packet level).

The Transport Stream system target decoder buffer model described in ISO/IEC 13818-1 [3] §2.4.2 has two different buffers of differing sizes and speeds (three for video). The first order buffer, TBn, is the smallest and fastest. Care should be taken during the multiplexing process to ensure meeting the requirements that TBn and T-STD not be violated for any stream at TS-R.

Adding E-VSB packets to the mix will cause each main stream Transport Stream packet to incur delay with respect to their original packet timing. The amount of delay for each main stream Transport Stream packet varies as a function of the MAP number and position in the frame (indeed, this is true for one-half rate and one-quarter rate Transport Stream packets as well). As the ratio of E-VSB to main increases, the maximum delay that may be imposed on main stream packets generally increases due to the increasing limitation on the available packet

Exhibit 1015
TCL v. Maxell - IPR2025-00134
Page 94 of 136

position in the VSB frame. At the physical layer, the main stream packets tend to get bunched together near the bottom of the data frame.

The E-VSB emissions system induces additional variable delay (jitter) to Transport Stream packets. This delay is knowable in real-time, with sufficient integration between the MPEG encoding/multiplexing system and the emission system.

Absent such integration, it may be possible to meet the T-STD requirement (and other timing/buffering-based requirements) by limiting the usage of T-STD buffers by the encoding system, allowing for some additional jitter.

In particular, for video packets, it is possible that the packet delay can be accommodated by increasing the average amount of data in the video T-STD buffer or other means.

However, audio is not forced to reduce its bit rate in step with the video. In fact, even when the available bit rate will not support MPEG-2 video, it can still carry full rate audio. The audio decoder buffer was not designed to tolerate a significant added packet delay. A consequence of this is that the audio buffer could underflow unless care is taken in the utilization of the audio buffer by the system.

It may be necessary to constrain the video/audio encoders and/ or the transmission system in order to meet the requirement to conform with the MPEG-2 T-STD model under various circumstances.

In particular, ensuring that no overflow of TBn occurs may require particular implementation attention to the time between TS-M packets in a TS multiplex as compared to the time between TS-M packets in the transmitted frame. Under certain circumstances, the number of consecutive packets at TS-R for any particular stream of TS packets with the same PID must be limited, in order to not overflow TBn.

For example, when the chosen E-VSB mix provides only a very low rate main stream that is occupied entirely by an AC-3 audio program, it may not be possible to prevent TBn from overflowing after insertion of the E-VSB packets. Avoidance of this overflow condition may require changes to the original allocation of packet rate to TS-M services or eschewing certain combinations in the multiplex.

End of Part 3

Exhibit 1015
TCL v. Maxell - IPR2025-00134
Page 95 of 136

Doc. A/53, Part 4:2007
3 January 2007
Editorially modified 28 September 2007

ATSC Digital Television Standard
Part 4 – MPEG-2 Video System Characteristics
(A/53, Part 4:2007)

Advanced Television Systems Committee
1750 K Street, N.W.
Suite 1200
Washington, D.C. 20006
www.atsc.org

Exhibit 1015
TCL v. Maxell - IPR2025-00134
Page 96 of 136

The Advanced Television Systems Committee, Inc., is an international, non-profit organization developing voluntary standards for digital television. The ATSC member organizations represent the broadcast, broadcast equipment, motion picture, consumer electronics, computer, cable, satellite, and semiconductor industries.

Specifically, ATSC is working to coordinate television standards among different communications media focusing on digital television, interactive systems, and broadband multimedia communications. ATSC is also developing digital television implementation strategies and presenting educational seminars on the ATSC standards.

ATSC was formed in 1982 by the member organizations of the Joint Committee on InterSociety Coordination (JCIC): the Electronic Industries Association (EIA), the Institute of Electrical and Electronic Engineers (IEEE), the National Association of Broadcasters (NAB), the National Cable Television Association (NCTA), and the Society of Motion Picture and Television Engineers (SMPTE). Currently, there are approximately 140 members representing the broadcast, broadcast equipment, motion picture, consumer electronics, computer, cable, satellite, and semiconductor industries.

ATSC Digital TV Standards include digital high definition television (HDTV), standard definition television (SDTV), data broadcasting, multichannel surround-sound audio, and satellite direct-to-home broadcasting.

Note:

On 28 September 2007 this document was editorially modified to correct the following error. In Section 6.1.3, Table 6.3, the value for progressive_sequence is given as “see Table 3”. However, there is no Table 3 in the document. The correct reference is “Table 6.2.” The error has been corrected in this document.

Exhibit 1015
TCL v. Maxell - IPR2025-00134
Page 97 of 136

Table of Contents

1. SCOPE 5

2. REFERENCES 5

2.1 Normative References 5

2.2 Informative References 6

3. COMPLIANCE NOTATION 6

3.1 Treatment of Syntactic Elements 6

3.2 Symbols, Abbreviations, and Mathematical Operators 6

4. SYSTEM OVERVIEW (INFORMATIVE) 7

5. POSSIBLE VIDEO INPUTS 8

6. SOURCE CODING SPECIFICATION 9

6.1 Constraints with Respect to ISO/IEC 13818-2 Main Profile 9

6.1.1 Sequence Header Constraints 9

6.1.2 Compression Format Constraints 10

6.1.3 Sequence Extension Constraints 10

6.1.4 Sequence Display Extension Constraints 10

6.1.5 Picture Header Constraints 11

6.1.6 Picture Coding Constraints 11

6.2 Bit Stream Specifications Beyond MPEG-2 11

6.2.1 Picture Extension and User Data Syntax 11

6.2.2 Picture User Data Syntax 12

6.2.3 ATSC Picture User Data Semantics 13

6.2.3.1 Captioning Data 13

6.2.3.2 Bar Data 14

6.2.3.2.1 Recommended Receiver Response to Bar Data 16

6.2.4 Active Format Description Data 16

6.2.4.1 AFD Syntax 17

6.2.4.2 AFD Semantics 17

6.2.4.3 Recommended Receiver Response to AFD 18

6.2.5 Relationship Between Bar Data and AFD (Informative) 18

Exhibit 1015
TCL v. Maxell - IPR2025-00134
Page 98 of 136

Index of Tables and Figures

Table 5.1 Standardized Video Input Formats 9
Table 6.1 Sequence Header Constraints 9
Table 6.2 Compression Format Constraints 10
Table 6.3 Sequence Extension Constraints 10
Table 6.4 Sequence Display Extension Constraints 11
Table 6.5 Picture Extension and User Data Syntax 12
Table 6.6 Picture User Data Syntax 12
Table 6.7 Captioning Data Syntax 13
Table 6.8 Bar Data Syntax 15
Table 6.9 Line Number Designation 15
Table 6.10 Active Format Description Syntax 17
Table 6.11 Active Format 18

Figure 4.1 ITU-R digital terrestrial television broadcasting model. 7
Figure 4.2 High level view of encoding equipment. 8

Exhibit 1015
TCL v. Maxell - IPR2025-00134
Page 99 of 136

ATSC Digital Television Standard – Part 4: MPEG-2 Video System Characteristics

1. SCOPE

This Part describes the characteristics of the video subsystem of the Digital Television Standard. The input formats and bit stream characteristics are described in separate sections.[1]

2. REFERENCES

At the time of publication, the editions indicated were valid. All standards are subject to revision, and parties to agreement based on this standard are encouraged to investigate the possibility of applying the most recent editions of the documents listed below.

2.1 Normative References

The following documents contain provisions which, through reference in this text, constitute provisions of this standard.

[1] CEA: "Digital Television (DTV) Closed Captioning," Doc. CEA-708-C, Consumer Electronics Association, Arlington, VA, 30 July 2006.

[2] ISO: "ISO/IEC IS 13818-1:2000 (E), International Standard, Information technology – Generic coding of moving pictures and associated audio information: systems."

[3] ISO: "ISO/IEC IS 13818-2:2000 (E), International Standard, Information technology – Generic coding of moving pictures and associated audio information: video."

[4] SMPTE: "Standard for Television—Component Video Signal 4:2:2, Bit-Parallel Digital Interface," Doc. SMPTE 125M (1995), Society of Motion Picture and Television Engineers, White Plains, N.Y., 1995.

[5] SMPTE: "Standard for Television—Composite Analog Video Signal, NTSC for Studio Applications," Doc. SMPTE 170M (2004), Society of Motion Picture and Television Engineers, White Plains, N.Y., 2004.

[6] SMPTE: "Standard for Television—Bit-Parallel Digital Interface, Component Video Signal 4:2:2 16 x 9 Aspect Ratio," Doc. SMPTE 267M (1995), Society of Motion Picture and Television Engineers, White Plains, N.Y., 1995.

[7] SMPTE: "Standard for Television—1920 x 1080 Scanning and Analog and Parallel Digital Interfaces for Multiple Picture Rates," Doc. SMPTE 274M (2005), Society of Motion Picture and Television Engineers, White Plains, N.Y., 2005.

[8] SMPTE: "Standard for Television—720 x 483 Active Line at 59.94-Hz Progressive Scan Production, Digital Representation," Doc. SMPTE 293M (2003), Society of Motion Picture and Television Engineers, White Plains, N.Y., 2003.

[1] Note that there is a coordinated effort underway among ATSC, CEA, and SMPTE to revise and clarify standards related to delivering closed captions so that each describes the aspects of the system for which they are primarily responsible without overlap. This effort is expected to result in revisions of those sections in the ATSC Standards.

Exhibit 1015
TCL v. Maxell - IPR2025-00134
Page 100 of 136

[9] SMPTE: "Standard for Television—1280 x 720 Progressive Image Sample Structure, Analog and Digital Representation and Analog Interface," Doc. SMPTE 296M (2001), Society of Motion Picture and Television Engineers, White Plains, N.Y., 2001.

[10] ETSI: "Digital Video Broadcasting (DVB): Implementation Guidelines for the use of MPEG-2 Systems, Video and Audio in Satellite, Cable and Terrestrial Broadcasting Applications," Doc. ETSI TS 101 154 V1.7.1, Annex B, June 2005.

2.2 Informative References

[11] Digital TV Group: "Digital Receiver Implementation Guidelines and Recommended Receiver Reaction to Aspect Ratio Signaling in Digital Video Broadcasting," Issue 1.2.1, February 2001.

[12] ITU: "Encoding Parameters of Digital Television for Studios," Doc. ITU-R BT.601-5 (1994).

[13] ITU: "Parameter values for the HDTV Standards for Production and International Programme Exchange," Doc. ITU-R BT. 709-5 (2002).

[14] SCTE: "Standard for Carriage of NTSC VBI Data in Cable Digital Transport Streams," Doc. ANSI/SCTE 21 2001R2006, Society of Cable Telecommunications Engineers, Exton, PA, 2006.

[15] CEA: "Active Format Description (AFD) & Bar Data Recommended Practice," Doc. CEA-CEB16, Consumer Electronics Association, Arlington, VA, 31 July 2006.

[16] SMPTE: [in development] "Standard for Television—Format for Active Format Description and Bar Data," Doc. SMPTE 2016-1, Society of Motion Picture and Television Engineers, White Plains, N.Y.

[17] ATSC: "Digital Television Standard, Part 1 – Digital Television System," Doc. A/53, Part 1:2007, Advanced Television Systems Committee, Washington, D.C., 3 January 2007.

3. COMPLIANCE NOTATION

As used in this document, "shall" denotes a mandatory provision of the standard. "Should" denotes a provision that is recommended but not mandatory. "May" denotes a feature whose presence does not preclude compliance, that may or may not be present at the option of the implementor.

3.1 Treatment of Syntactic Elements

This document contains symbolic references to syntactic elements used in the audio, video, and transport coding subsystems. These references are typographically distinguished by the use of a different font (e.g., restricted), may contain the underscore character (e.g., sequence_end_code) and may consist of character strings that are not English words (e.g., dynrng).

3.2 Symbols, Abbreviations, and Mathematical Operators

The symbols, abbreviations, and mathematical operators used herein are as found in Section 3.4 of ATSC A/53 Part 1 [17].

Exhibit 1015
TCL v. Maxell - IPR2025-00134
Page 101 of 136

4. SYSTEM OVERVIEW (INFORMATIVE)

A basic block diagram representation of the system is shown in Figure 4.1. According to this model, the digital television system can be seen to consist of three subsystems.

- Source coding and compression
- Service multiplex and transport
- RF/transmission

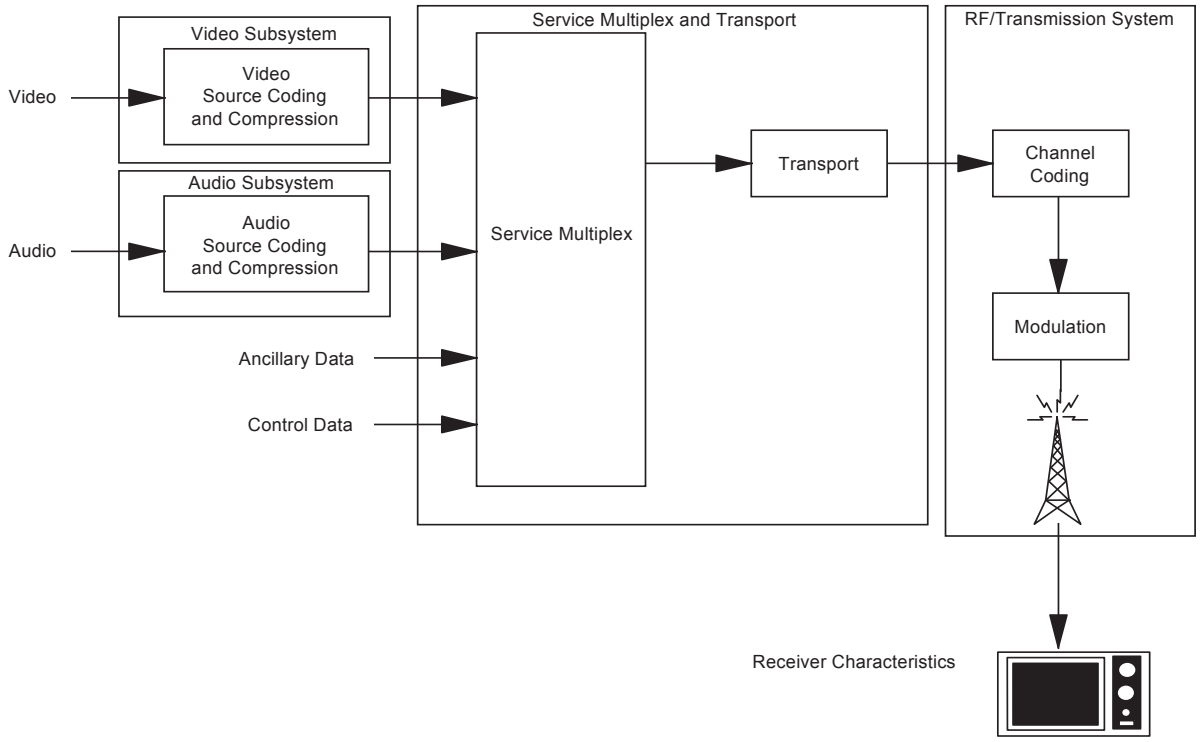

Figure 4.1 ITU-R digital terrestrial television broadcasting model.

Figure 4.2 illustrates a high level view of the encoding equipment. This view is not intended to be representative of actual implementations, but is used to illustrate the relationship of various clock frequencies within the encoder.

Exhibit 1015
TCL v. Maxell - IPR2025-00134
Page 102 of 136

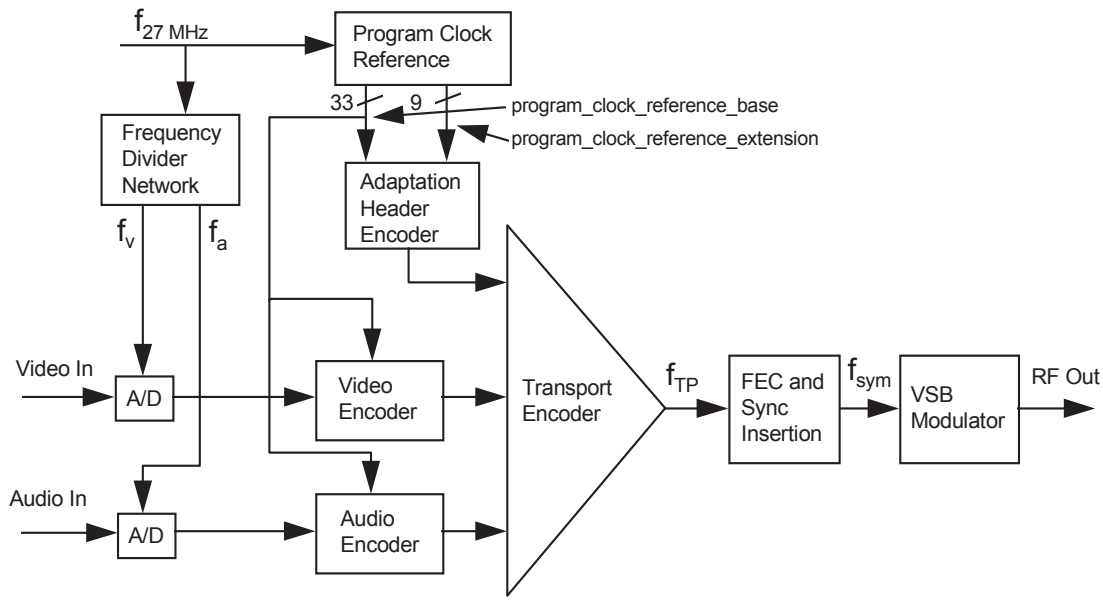

Figure 4.2 High level view of encoding equipment.

The source coding domain, represented schematically by the video, audio, and transport encoders, uses a family of frequencies which are based on a 27 MHz clock ($f_{27\text{MHz}}$). This clock is used to generate a 42-bit sample of the frequency which is partitioned into two parts defined by the MPEG-2 specification. These are the 33-bit program_clock_reference_base and the 9-bit program_clock_reference_extension. The former is equivalent to a sample of a 90 kHz clock which is locked in frequency to the 27 MHz clock, and is used by the audio and video source encoders when encoding the presentation time stamp (PTS) and the decode time stamp (DTS). The audio and video sampling clocks, f_a and f_v respectively, are frequency-locked to the 27 MHz clock. This can be expressed as the requirement that there exist two pairs of integers, (n_a, m_a) and (n_v, m_v), such that

$$f_a = \frac{n_a}{m_a} \times 27 \text{ MHz}$$

and

$$f_v = \frac{n_v}{m_v} \times 27 \text{ MHz}$$

5. POSSIBLE VIDEO INPUTS

While not required by this standard, there are certain television production standards, shown in Table 5.1, that define video formats that relate to compression formats specified by this standard.

Exhibit 1015
TCL v. Maxell - IPR2025-00134
Page 103 of 136

Table 5.1 Standardized Video Input Formats

Video Standard	Active Lines	Active Samples/ Line
SMPTE 274M [7]	1080	1920
SMPTE 296M [9]	720	1280
ITU-R BT.601-5 [12]	483	720

The compression formats may be derived from one or more appropriate video input formats. It may be anticipated that additional video production standards will be developed in the future that extend the number of possible input formats.

6. SOURCE CODING SPECIFICATION

The DTV video compression algorithm shall conform to the Main Profile syntax of ISO/IEC 13818-2 [3]. The allowable parameters shall be bounded by the upper limits specified for the Main Profile at High Level.[2] Additionally, all bit streams shall meet the constraints and specifications described in Sections 6.1 and 6.2.

6.1 Constraints with Respect to ISO/IEC 13818-2 Main Profile

The following tables list the allowed values for each of the ISO/IEC 13818-2 [3] syntactic elements which are restricted beyond the limits imposed by MP@HL.

In these tables conventional numbers denote decimal values, numbers preceded by 0x are to be interpreted as hexadecimal values and numbers within single quotes (e.g., ‘10010100’) are to be interpreted as a string of binary digits.

6.1.1 Sequence Header Constraints

Table 6.1 identifies parameters in the sequence header of a bit stream that shall be constrained by the video subsystem and lists the allowed values for each.

Table 6.1 Sequence Header Constraints

Sequence Header Syntactic Element	Allowed Value
horizontal_size_value	see Table 6.2
vertical_size_value	see Table 6.2
aspect_ratio_information	see Table 6.2
frame_rate_code	see Table 6.2
bit_rate_value (≤ 19.4 Mbps)	≤ 48500
bit_rate_value (≤ 38.8 Mbps)	≤ 97000
vbv_buffer_size_value	≤ 488

The allowable values for the field bit_rate_value are application-dependent. In the primary application of terrestrial broadcast, this field shall correspond to a bit rate which is less than or equal to 19.4 Mbps. In the high data rate mode, the corresponding bit rate is less than or equal to 38.8 Mbps.

[2] See ISO/IEC 13818-2 [3], Section 8 for more information regarding profiles and levels.

Exhibit 1015
TCL v. Maxell - IPR2025-00134
Page 104 of 136

6.1.2 Compression Format Constraints

Table 6.2 lists the allowed compression formats.

Table 6.2 Compression Format Constraints

vertical_size_value	horizontal_size_value	aspect_ratio_information	frame_rate_code	progressive_sequence
1080[3]	1920	1,3	1,2,4,5	'1'
			4,5	'0'
720	1280	1,3	1,2,4,5,7,8	'1'
480	704	2,3	1,2,4,5,7,8	'1'
			4,5	'0'
	640	1,2	1,2,4,5,7,8	'1'
			4,5	'0'
Legend for MPEG-2 coded values:				
aspect_ratio_information: 1 = square samples, 2 = 4:3 display aspect ratio, 3 = 16:9 display aspect ratio				
frame_rate_code: 1 = 23.976 Hz, 2 = 24 Hz, 4 = 29.97 Hz, 5 = 30 Hz, 7 = 59.94 Hz, 8 = 60 Hz				
progressive_sequence: '0' = interlaced scan, '1' = progressive scan				

6.1.3 Sequence Extension Constraints

Table 6.3 identifies parameters in the sequence extension part of a bit stream that shall be constrained by the video subsystem and lists the allowed values for each. A sequence_extension structure is required to be present after every sequence_header structure.

Table 6.3 Sequence Extension Constraints

Sequence Extension Syntactic Element	Allowed Values
progressive_sequence	see Table 6.2
profile_and_level_indication	see Note
chroma_format	'01'
horizontal_size_extension	'00'
vertical_size_extension	'00'
bit_rate_extension	'0000 0000 0000'
vbv_buffer_size_extension	'0000 0000'
frame_rate_extension_n	'00'
frame_rate_extension_d	'0000 0'

Note: The profile_and_level_indication field shall indicate the lowest profile and level defined in ISO/IEC 13818-2 [3], Section 8, that is consistent with the parameters of the video elementary stream.

6.1.4 Sequence Display Extension Constraints

Table 6.4 identifies parameters in the sequence display extension part of a bit stream that shall be constrained by the video subsystem and lists the allowed values for each.

[3] Note that 1088 lines are actually coded in order to satisfy the MPEG-2 requirement that the coded vertical size be a multiple of 16 (progressive scan) or 32 (interlaced scan). The bottom 8 lines are black, per MPEG rules.

Exhibit 1015
TCL v. Maxell - IPR2025-00134
Page 105 of 136

Table 6.4 Sequence Display Extension Constraints

Sequence Display Extension Syntactic Element	Allowed Values
video_format	'000'

The values for color_primaries, transfer_characteristics, and matrix_coefficients shall be explicitly indicated in the sequence_display_extension. While all values for color_primaries, transfer_characteristics, and matrix_coefficients defined in Tables 6-7, 6-8, and 6-9 of ISO/IEC 13818-2 [3] are allowed in the transmitted bit stream, it is noted that those of ITU-R BT.709 [13] and SMPTE 170M [5] are the most likely to be in common use.

> Note: Some previously-encoded legacy material may not have the colorimetry (i.e., color_primaries, transfer_characteristics, and matrix_coefficients) explicitly indicated in the sequence_display_extension, in which case the colorimetry is most likely ITU-R BT.709 [13] for all formats except those formats with vertical_size_value = 480, which are most likely to have colorimetry according to SMPTE 170M [5].

6.1.5 Picture Header Constraints

In all cases other than when vbv_delay has the value 0xFFFF, the value of vbv_delay shall be constrained as follows:

$$\text{vbv_delay} \leq 45000$$

6.1.6 Picture Coding Constraints

The value frame_pred_frame_dct shall be '1' if progressive_frame is '1'.

6.2 Bit Stream Specifications Beyond MPEG-2

This section covers the extension and user data part of the video syntax. These data are inserted at the sequence, GOP, and picture level. The syntax used for the insertion of closed captioning[4] in picture user data is described.

6.2.1 Picture Extension and User Data Syntax

The picture user data shall be constructed per [3]. Table 6.5 is provided to show the syntax that is required for picture extension and user data.

[4] Implementers should note that CEA-708 [1] describes the semantics for closed captions. .

Exhibit 1015
TCL v. Maxell - IPR2025-00134
Page 106 of 136

Table 6.5 Picture Extension and User Data Syntax

Value	No. of Bits	Format
extension_and_user_data(2) {		
while ((nextbits() == extension_start_code) || (nextbits() == user_data_start_code)) {		
if (nextbits() == extension_start_code)		
extension_data(2)		
if (nextbits() == user_data_start_code)		
user_data()		
}		
}		

6.2.2 Picture User Data Syntax

Table 6.6 describes the picture user data syntax that shall be used.

Table 6.6 Picture User Data Syntax[5]

Syntax	No. of Bits	Format
user_data() {		
user_data_start_code	32	bslbf
ATSC_identifier	32	bslbf
user_data_type_code	8	uimsbf
if (user_data_type_code == ‘0x03’)		
cc_data()		
else if (user_data_type_code == ‘0x06’)		
bar_data()		
else {		
while (nextbits() != ‘0000 0000 0000 0000 0000 0001’)		
ATSC_reserved_user_data	8	
}		
next_start_code()		
}		

In accordance with the bit stream syntax in Table 6.5, more than one picture user data construct may follow any given picture header. However, no more than one picture user data construct using the same user_data_type_code shall follow any given picture header.

Note that picture user data with a 32-bit field following user_data_start_code having a value other than ATSC_identifier may be present in an ATSC-compliant video bit stream. As an example, the afd_identifier (value 0x44544731) is defined for use in ATSC video Elementary Streams (see Section 6.2.4). Receiving devices are expected to process this field and use it to determine the syntax and semantics of the user data construct to follow.

[5] Shaded cells in this table indicate syntactic and semantic additions to the ISO/IEC 13818-2 [3] Standard. Note: user_data_type_code values 0x04 and 0x05 are assigned in ANSI/SCTE 21 2001 [14].

Exhibit 1015
TCL v. Maxell - IPR2025-00134
Page 107 of 136

Receiving devices are expected to silently discard any unrecognized video user data encountered in the video bit stream. For example, if an unrecognized 32-bit identifier is seen following the user_data_start_code, or an unrecognized 8-bit user_data_type_code is seen following the ATSC_identifier, data should be discarded until another start code is seen.

6.2.3 ATSC Picture User Data Semantics

user_data_start_code – This is set to 0x0000 01B2.

ATSC_identifier – This is a 32 bit code that indicates that the video user data conforms to this specification. The value ATSC_identifier shall be 0x4741 3934.

user_data_type_code – An 8-bit value that identifies the type of ATSC user data to follow. Value 0x03 indicates cc_data(), value 0x06 indicates bar_data(), and other values are either in use in other standards or are reserved for future use.

cc_data() – A data structure defined in Table 6.7.

bar_data() – A data structure defined in Table 6.8 indicating the sizes of letterbox or pillarbox areas within the coded video frame.

ATSC_reserved_user_data – Reserved for use by ATSC or used by other standards.

6.2.3.1 Captioning Data

Table 6.7 describes the syntax of captioning data.

Table 6.7 Captioning Data Syntax

Syntax	No. of Bits	Format
cc_data() {		
reserved	1	’1’
process_cc_data_flag	1	bslbf
additional_data_flag	1	bslbf
cc_count	5	uimsbf
reserved	8	‘1111 1111’
for (i=0 ; i < cc_count ; i++) {		
marker_bits	5	‘1111 1’
cc_valid	1	bslbf
cc_type	2	bslbf
cc_data_1	8	bslbf
cc_data_2	8	bslbf
}		
marker_bits	8	‘1111 1111’
if (additional_data_flag) {		
while (nextbits() != ‘0000 0000 0000 0000 0000 0001’) {		
additional_cc_data		
}		
}		
}		

Exhibit 1015
TCL v. Maxell - IPR2025-00134
Page 108 of 136

process_cc_data_flag – This flag is set to indicate whether it is necessary to process the cc_data. If it is set to '1', the cc_data has to be parsed and its meaning has to be processed. When it is set to '0', the cc_data can be discarded.

additional_data_flag – This flag is set to '1' to indicate the presence of additional user data.

cc_count: This 5-bit integer indicates the number of closed caption constructs following this field. It can have values 0 through 31. The value of cc_count shall be set according to the frame rate and coded picture structure (field or frame) such that a fixed bandwidth of 9600 bits per second is maintained for the closed caption payload data. Sixteen (16) bits of closed caption payload data are carried in each pair of the fields cc_data_1 and cc_data_2.

cc_valid – This flag is set to '1' to indicate that the two closed caption data bytes that follow are valid. If set to '0' the two data bytes are invalid, as defined in CEA-708 [1].

cc_type – Denotes the type of the two closed caption data bytes that follow, as defined in CEA-708 [1].

cc_data_1 – The first byte of a closed caption data pair as defined in CEA-708 [1].

cc_data_2 – The second byte of a closed caption data pair as defined in CEA-708 [1].

additional_cc_data – Reserved for future ATSC definition.

6.2.3.2 Bar Data

Table 6.8 describes the syntax of bar data. Bar data should be included in video user data whenever the rectangular picture area containing useful information does not extend to the full height or width of the coded frame[6] and AFD alone is insufficient to describe the extent of the image. See Section 6.2.4.

When present, bar data shall be carried in the data structure bar_data(), within the picture user data syntax as shown in Table 6.6. After any sequence_header() such bar data shall appear before the next picture_data() within extension_and_user_data(2). After introduction, such bar data shall remain in effect until:

1) the next sequence_header(), or
2) extension_and_user_data(2) containing a bar_data() structure which contains new bar data, or
3) extension_and_user_data(2) containing AFD per Section 6.2.4.

After any sequence_header(), unless AFD data is present specifying otherwise, the absence of bar data shall indicate that the rectangular picture area containing useful information extends to the full height and width of the coded frame.

Bar data is constrained (below) to be signalled in pairs, either top and bottom bars or left and right bars, but not both pairs at once. Bars may be unequal in size. One bar of a pair may be zero width or height.

[6] In other words, the video is letterboxed (bars above and/or below video) or pillarboxed (bars left and/or right of video).

Exhibit 1015
TCL v. Maxell - IPR2025-00134
Page 109 of 136

Table 6.8 Bar Data Syntax

Syntax	No. of Bits	Format
bar_data() {		
top_bar_flag	1	bslbf
bottom_bar_flag	1	bslbf
left_bar_flag	1	bslbf
right_bar_flag	1	bslbf
reserved	4	‘1111’
if (top_bar_flag == ‘1’) {		
marker_bits	2	‘11’
line_number_end_of_top_bar	14	uimsbf
}		
if (bottom_bar_flag == ‘1’) {		
marker_bits	2	‘11’
line_number_start_of_bottom_bar	14	uimsbf
}		
if (left_bar_flag == ‘1’) {		
marker_bits	2	‘11’
pixel_number_end_of_left_bar	14	uimsbf
}		
if (right_bar_flag == ‘1’) {		
marker_bits	2	‘11’
pixel_number_start_of_right_bar	14	uimsbf
}		
marker_bits	8	‘1111 1111’
while (nextbits() != ‘0000 0000 0000 0000 0000 0001’) {		
additional_bar_data		
}		
}		

Designation of line numbers for line_number_end_of_top_bar and line_number_start_of_bottom_bar is video format-dependent and shall conform to the applicable standard indicated in Table 6.9.

Note: The range of line numbers and pixels within the coded frame for each image format is specified in Table 2 of SMPTE 2016-1 [16].

Table 6.9 Line Number Designation

Video Format	Applicable Standard
480 Interlaced 4:3	SMPTE 125M [4]
480 Interlaced 16:9	SMPTE 267M [6]
480 Progressive	SMPTE 293M [8]
720 Progressive	SMPTE 296M [9]
1080 Interlaced	SMPTE 274M [7]
1080 Progressive	SMPTE 274M [7]

Exhibit 1015
TCL v. Maxell - IPR2025-00134
Page 110 of 136

top_bar_flag – This flag shall indicate, when set to '1', that the top bar data is present. If left_bar_flag is '1', this flag shall be set to '0'.

bottom_bar_flag – This flag shall indicate, when set to '1', that the bottom bar data is present. This flag shall have the same value as top_bar_flag.

left_bar_flag – This flag shall indicate, when set to '1', that the left bar data is present. If top_bar_flag is '1', this flag shall be set to '0'.

right_bar_flag – This flag shall indicate, when set to '1', that the right bar data is present. This flag shall have the same value as left_bar_flag.

line_number_end_of_top_bar – A 14-bit unsigned integer value representing the last line of a horizontal letterbox bar area at the top of the reconstructed frame. Designation of line numbers shall be as defined per each applicable standard in Table 6.9.

line_number_start_of_bottom_bar – A 14-bit unsigned integer value representing the first line of a horizontal letterbox bar area at the bottom of the reconstructed frame. Designation of line numbers shall be as defined per each applicable standard in Table 6.9.

pixel_number_end_of_left_bar – A 14-bit unsigned integer value representing the last horizontal luminance sample of a vertical pillarbox bar area at the left side of the reconstructed frame. Pixels shall be numbered from zero, starting with the leftmost pixel.

pixel_number_start_of_right_bar – A 14-bit unsigned integer value representing the first horizontal luminance sample of a vertical pillarbox bar area at the right side of the reconstructed frame. Pixels shall be numbered from zero, starting with the leftmost pixel.

additional_bar_data – Reserved for future ATSC definition.

6.2.3.2.1 Recommended Receiver Response to Bar Data

Receiving device designers are strongly encouraged to study Consumer Electronics Association (CEA) bulletin CEB16 [15], which contains recommendations regarding the processing of bar data.

6.2.4 Active Format Description Data

Active Format Description (AFD) should be included in video user data whenever the rectangular picture area containing useful information does not extend to the full height or width of the coded frame. AFD data may also be included in user data when the rectangular picture area containing useful information extends to the full height and width of the coded frame.

When present, the AFD shall be carried using the syntax defined in [10], in extension_and_user_data(2) in the MPEG-2 video Elementary Stream. After any sequence_header() the default aspect ratio of the area of interest shall be that signaled by the parameters in the sequence_header() and sequence_display_extension() structures. After any sequence_header() the AFD, when present, shall appear before the next picture_data(). After introduction, such an AFD shall remain in effect until the next sequence_header() or until a new AFD is introduced.

> Note: The AFD syntax as shown in Section 6.4.2.1 is identical to that specified in ETSI TS 101 154 V1.7.1 [10], and is reprinted here with permission. Semantics are documented in Section 6.2.4.2; some are intentionally different from those in ETSI 101 154.

Exhibit 1015
TCL v. Maxell - IPR2025-00134
Page 111 of 136

6.2.4.1 AFD Syntax

Table 6.10 shows the syntax defined in [10] which is provided for the convenience of the reader.

Table 6.10 Active Format Description Syntax

Syntax	No. of Bits	Format
user_data_start_code	32	bslbf
afd_identifier	32	bslbf
zero	1	’0’
active_format_flag	1	bslbf
reserved	6	’00 0001’
if (active_format_flag == ‘1’) {		
reserved	4	‘1111’
active_format	4	bslbf
}		

6.2.4.2 AFD Semantics

afd_identifier – A 32-bit field that identifies that the syntax of the user data is Active Format Description. Its value is 0x44544731.

active_format_flag – A 1 bit flag. A value of ‘1’ indicates that an active format is described in this data structure.

active_format – A 4 bit field describing the “area of interest” in terms of its aspect ratio within the coded frame as defined in ISO/IEC 13818-2 [3].

The active_format is used by the decoder in conjunction with the “source aspect ratio.” The source aspect ratio is derived from the “display aspect ratio” (DAR) signaled in the aspect_ratio_information, the horizontal_size, vertical_size, and display_horizontal_size and display_vertical_size if present (see ISO/IEC 13818-2 [3]):

- If sequence_display_extension() is not present, source aspect ratio = DAR
- If sequence_display_extension() is present, source aspect ratio =

$$\mathrm{DAR} \times \frac{\mathrm{display_horizontal_size}}{\mathrm{display_vertical_size}} \times \frac{\mathrm{vertical_size}}{\mathrm{horizontal_size}}$$

The combination of source aspect ratio and active_format allows the decoder to identify whether the “area of interest” is the whole of the frame (e.g. source aspect ratio 16:9, active_format 16:9 center), a letterbox within the frame (e.g. source aspect ratio 4:3, active_format 16:9 center), or a “pillarbox” within the frame (e.g. source aspect ratio 16:9, active_format 4:3 center).

Table 6.11 defines the coding of the active_format field that shall be used.

Exhibit 1015
TCL v. Maxell - IPR2025-00134
Page 112 of 136

Table 6.11 Active Format

active_format	Description	
	4:3 coded frames	**16:9 coded frames**
‘0000’	undefined (see below)	undefined (see below)
‘0001’	Reserved	Reserved
‘0010’ – ‘0011”	Not recommended	Not recommended
0100	Aspect ratio greater than 16:9 (see below)	Aspect ratio greater than 16:9 (see below)
‘0101’ – ‘0111’	Reserved	Reserved
‘1000’	4:3 full frame image	16:9 full frame image
‘1001’	4:3 full frame image	4:3 pillarbox image
‘1010’	16:9 letterbox image	16:9 full frame image
‘1011’	14:9 letterbox image	14:9 pillarbox image
‘1100’	Reserved	Reserved
‘1101’	4:3 full frame image, alternative 14:9 center	4:3 pillarbox image, alternative 14:9 center
‘1110’	16:9 letterbox image, alternative 14:9 center	16:9 full frame image, alternative 14:9 center
‘1111’	16:9 letterbox image, alternative 4:3 center	16:9 full frame image, alternative 4:3 center

AFD ‘0000’ indicates that information is not available and is undefined. Unless bar data is available, DTV receivers and video equipment should interpret the active image area as being the same as that of the coded frame.

AFD ‘0000’, when accompanied by bar data, signals that the image’s aspect ratio is narrower than 16:9, but is not either 4:3 or 14:9. The bar data should be used to determine the extent of the image.

AFD ‘0100’, which should be accompanied by bar data, signals that the image’s aspect ratio is wider than 16:9, as is typically the case with widescreen features. The bar data should be used to determine the height of the image.

Use of either ‘0010’ or ‘0011’ is not recommended in the ATSC television system. Values ‘0001’, ‘0101’ through ‘0111’, and ‘1100’ are reserved.

6.2.4.3 Recommended Receiver Response to AFD

Receiving device designers are strongly encouraged to study Consumer Electronics Association (CEA) bulletin CEB16 [15], which contains recommendations regarding the processing of AFD.

6.2.5 Relationship Between Bar Data and AFD (Informative)

Certain combinations of Active Format Description and bar data may be present in video user data (either, neither, or both). Note that AFD data may not always exactly match bar data because AFD only deals with 4:3, 14:9, and 16:9 aspect ratios while bar data can represent nearly any aspect ratio. When AFD and bar data are present together, AFD should be used in preference to bar data, except in the cases of AFD ‘0000’ and ‘0100’, where bar data should be used in concert with AFD as described above.

End of Part 4

Exhibit 1015
TCL v. Maxell - IPR2025-00134
Page 113 of 136

Doc. A/53, Part 5:2007
3 January 2007

ATSC Digital Television Standard
Part 5 – AC-3 Audio System Characteristics
(A/53, Part 5:2007)

Advanced Television Systems Committee
1750 K Street, N.W.
Suite 1200
Washington, D.C. 20006
www.atsc.org

The Advanced Television Systems Committee, Inc., is an international, non-profit organization developing voluntary standards for digital television. The ATSC member organizations represent the broadcast, broadcast equipment, motion picture, consumer electronics, computer, cable, satellite, and semiconductor industries.

Specifically, ATSC is working to coordinate television standards among different communications media focusing on digital television, interactive systems, and broadband multimedia communications. ATSC is also developing digital television implementation strategies and presenting educational seminars on the ATSC standards.

ATSC was formed in 1982 by the member organizations of the Joint Committee on InterSociety Coordination (JCIC): the Electronic Industries Association (EIA), the Institute of Electrical and Electronic Engineers (IEEE), the National Association of Broadcasters (NAB), the National Cable Television Association (NCTA), and the Society of Motion Picture and Television Engineers (SMPTE). Currently, there are approximately 140 members representing the broadcast, broadcast equipment, motion picture, consumer electronics, computer, cable, satellite, and semiconductor industries.

ATSC Digital TV Standards include digital high definition television (HDTV), standard definition television (SDTV), data broadcasting, multichannel surround-sound audio, and satellite direct-to-home broadcasting.

Exhibit 1015
TCL v. Maxell - IPR2025-00134
Page 115 of 136

Table of Contents

1. SCOPE 5

2. REFERENCES 5

2.1 Normative References 5

2.2 Informative Reference 5

3. COMPLIANCE NOTATION 5

3.1 Treatment of Syntactic Elements 5

3.2 Symbols, Abbreviations, and Mathematical Operators 6

4. SYSTEM OVERVIEW (INFORMATIVE) 6

5. SPECIFICATION 8

5.1 Constraints With Respect to ATSC Standard A/52 8

5.2 Sampling Frequency 9

5.3 Bit Rate 9

5.4 Audio Coding Modes 9

5.5 Dialogue Level 9

5.6 Dynamic Range Compression 10

5.7 STD Audio Buffer Size 10

6. MAIN AND ASSOCIATED SERVICES 10

6.1 Summary of Service Types 10

6.2 Complete Main Audio Service (CM) 11

6.3 Main Audio Service, Music and Effects (ME) 11

6.4 Visually Impaired (VI) 11

6.5 Hearing Impaired (HI) 12

6.6 Dialogue (D) 12

6.7 Commentary (C) 12

6.8 Emergency (E) 13

6.9 Voice-Over (V0) 13

7. AUDIO ENCODER INTERFACES 13

7.1 Audio Encoder Input Characteristics 13

7.2 Audio Encoder Output Characteristics 14

Exhibit 1015
TCL v. Maxell - IPR2025-00134
Page 116 of 136

Index of Tables and Figures

Table 5.1 Audio Constraints 9
Table 6.1 Audio Service Types 11

Figure 4.1 ITU-R digital terrestrial television broadcasting model. 6
Figure 4.2 High level view of encoding equipment. 7
Figure 4.3 Audio subsystem in the digital television system. 8

Exhibit 1015
TCL v. Maxell - IPR2025-00134
Page 117 of 136

ATSC Digital Television Standard – Part 5: AC-3 Audio System Characteristics

1. SCOPE

This Part describes the audio system characteristics and normative specifications of the Digital Television Standard.

2. REFERENCES

At the time of publication, the editions indicated were valid. All standards are subject to revision and amendment, and parties to agreement based on this standard are encouraged to investigate the possibility of applying the most recent editions of the documents listed below.

2.1 Normative References

The following documents contain provisions which in whole or part, through reference in this text, constitute provisions of this standard.

[1] AES: "AES Recommended practice for digital audio engineering—Serial transmission format for two-channel linearly represented digital audio data," Doc. AES3-2003, Audio Engineering Society, New York, N.Y., 2003. (This document is a revision of AES3-1992, including subsequent amendments).

[2] ANSI: "Specification for Sound Level Meters," Doc. ANSI S1.4-1983 (R 2001) with Amd.S1.4A-1995, American National Standards Institute, Washington, D.C.

[3] ATSC: "Digital Audio Compression (AC-3, E-AC-3)," Doc. A/52B, Advanced Television Systems Committee, Washington, D.C., 14 June 2005.

2.2 Informative Reference

[4] ATSC: "Digital Television Standard, Part 1 – Digital Television System," Doc. A/53, Part 1:2007, Advanced Television Systems Committee, Washington, D.C., 3 January 2007.

3. COMPLIANCE NOTATION

As used in this document, "shall" denotes a mandatory provision of the standard. "Should" denotes a provision that is recommended but not mandatory. "May" denotes a feature whose presence does not preclude compliance, that may or may not be present at the option of the implementor.

3.1 Treatment of Syntactic Elements

This document contains symbolic references to syntactic elements used in the audio, video, and transport coding subsystems. These references are typographically distinguished by the use of a different font (e.g., restricted), may contain the underscore character (e.g., sequence_end_code) and may consist of character strings that are not English words (e.g., dynrng).

Exhibit 1015
TCL v. Maxell - IPR2025-00134
Page 118 of 136

3.2 Symbols, Abbreviations, and Mathematical Operators

The symbols, abbreviations, and mathematical operators used herein are as found in Section 3.4 of ATSC A/53 Part 1 [4].

4. SYSTEM OVERVIEW (INFORMATIVE)

A basic block diagram representation of the system is shown in Figure 4.1. According to this model, the digital television system can be seen to consist of three subsystems.

- Source coding and compression
- Service multiplex and transport
- RF/transmission

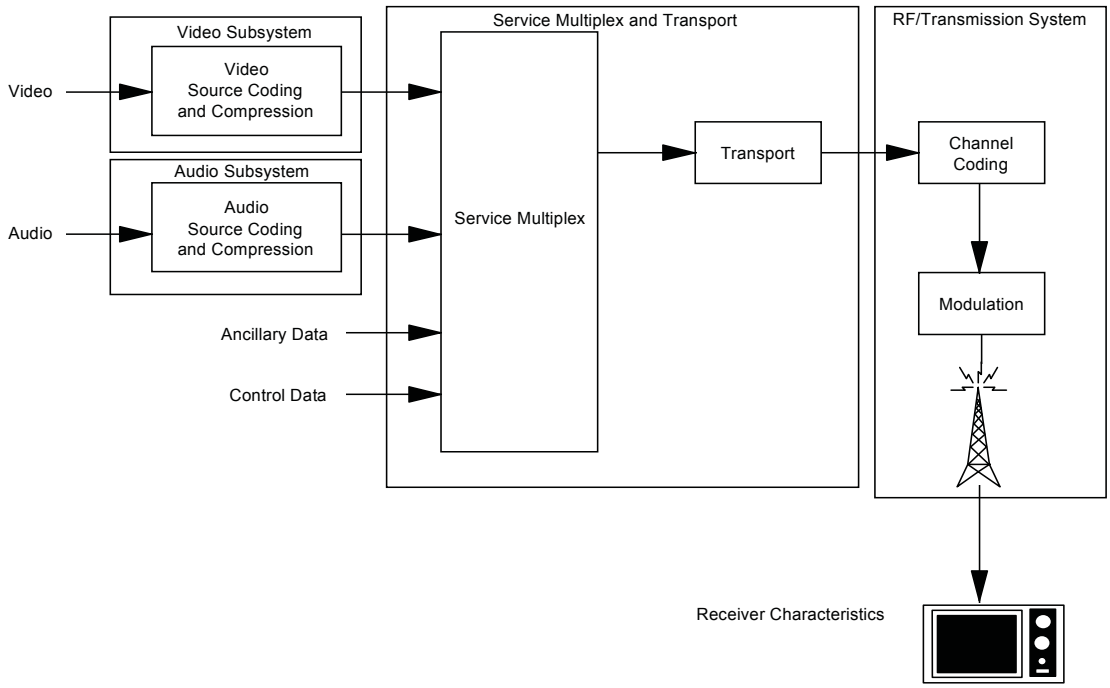

Figure 4.1 ITU-R digital terrestrial television broadcasting model.

Figure 4.2 illustrates a high level view of encoding equipment. This view is not intended to be representative of actual implementations, but is used to illustrate the relationship of various clock frequencies within the encoder.

Exhibit 1015
TCL v. Maxell - IPR2025-00134
Page 119 of 136

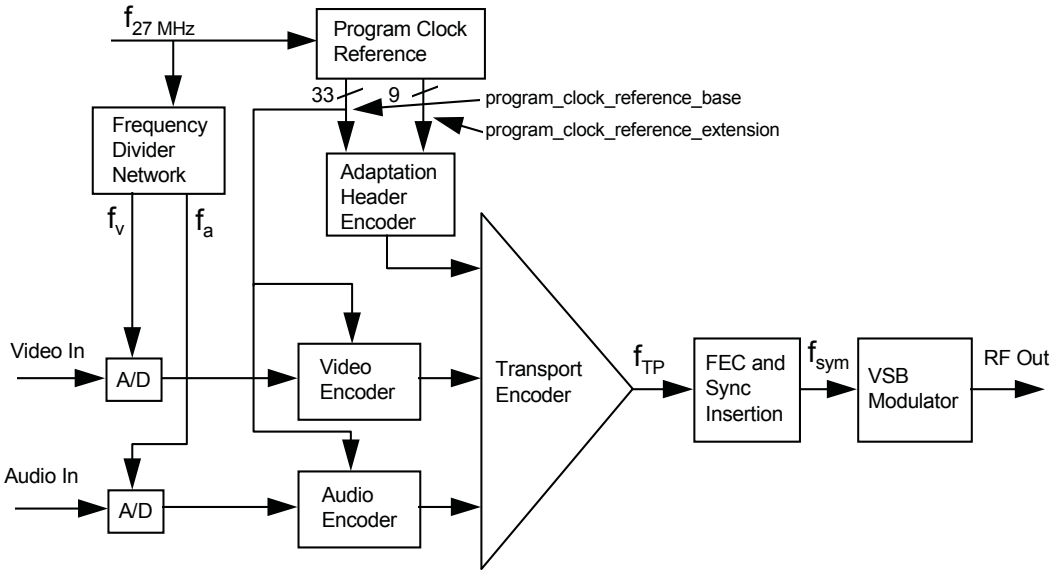

Figure 4.2 High level view of encoding equipment.

The source coding domain, represented schematically by the video, audio, and transport encoders, uses a family of frequencies which are based on a 27 MHz clock ($f_{27\text{MHz}}$). This clock is used to generate a 42-bit sample of the frequency which is partitioned into two parts defined by the MPEG-2 specification. These are the 33-bit program_clock_reference_base and the 9-bit program_clock_reference_extension. The former is equivalent to a sample of a 90 kHz clock which is locked in frequency to the 27 MHz clock, and is used by the audio and video source encoders when encoding the presentation time stamp (PTS) and the decode time stamp (DTS). The audio and video sampling clocks, f_a and f_v respectively, are frequency-locked to the 27 MHz clock. This can be expressed as the requirement that there exist two pairs of integers, (n_a, m_a) and (n_v, m_v), such that

$$f_a = \frac{n_a}{m_a} \times 27 \text{ MHz}$$

and

$$f_v = \frac{n_v}{m_v} \times 27 \text{ MHz}$$

As illustrated in Figure 4.3, the audio subsystem comprises the audio encoding/decoding function and resides between the audio inputs/outputs and the transport subsystem. The audio encoder(s) is (are) responsible for generating the audio elementary stream(s) which are encoded representations of the baseband audio input signals. At the receiver, the audio subsystem is responsible for decoding the audio elementary stream(s) back into baseband audio.

Exhibit 1015
TCL v. Maxell - IPR2025-00134
Page 120 of 136

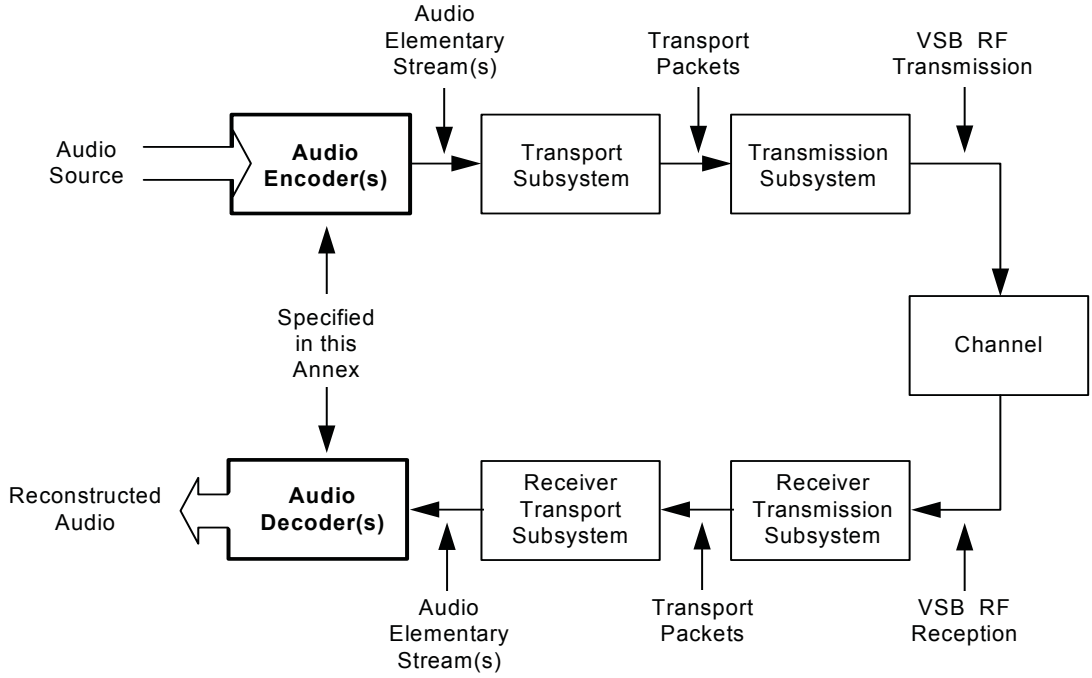

Figure 4.3 Audio subsystem in the digital television system.

5. SPECIFICATION

This Section forms the normative specification of the audio system. The audio compression system shall conform with the Digital Audio Compression (AC-3) Standard, subject to the constraints outlined in this Section.

5.1 Constraints With Respect to ATSC Standard A/52

The digital television audio coding system is based on the Digital Audio Compression (AC-3) Standard specified in the body of ATSC Doc. A/52 [3] (the non-normative annexes are not included). Constraints on the system are shown in Table 5.1, which shows permitted values of certain syntactical elements. These constraints are described in Sections 5.2 – 5.4. The receive audio buffer is specified in Section 5.7.

Exhibit 1015
TCL v. Maxell - IPR2025-00134
Page 121 of 136

Table 5.1 Audio Constraints

AC-3 Syntactical Element	Comment	Allowed value
fscod	Indicates sampling rate	'00' (indicates 48 kHz)
frmsizecod	Main audio service or associated audio service containing all necessary program elements	≤ '011110' (indicates ≤ 448 kb/s)
frmsizecod	Single channel associated service containing a single program element	≤ '010000' (indicates ≤ 128 kbps)
frmsizecod	Two channel dialogue associated service	≤ '010100' (indicates ≤ 192 kbps)
(frmsizecod)	Combined bit rate of a main and an associated service intended to be simultaneously decoded	(total ≤ 576 kbps)
acmod	Indicates number of channels	≥ '001'

5.2 Sampling Frequency

The system conveys digital audio sampled at a frequency of 48 kHz, locked to the 27 MHz system clock. The 48 kHz audio sampling clock is defined as:

$$48 \text{ kHz audio sample rate} = (2 \div 1125) \times (27 \text{ MHz system clock})$$

If analog signal inputs are employed[1], the A/D converters should sample at 48 kHz. If digital inputs are employed, the input sampling rate shall be 48 kHz, or the audio encoder shall contain sampling rate converters which convert the sampling rate to 48 kHz.

5.3 Bit Rate

A main audio service, or an associated audio service which is a complete service (containing all necessary program elements) shall be encoded at a bit rate less than or equal to 448 kbps. A single channel associated service containing a single program element shall be encoded at a bit rate less than or equal to 128 kbps. A two channel associated service containing only dialogue shall be encoded at a bit rate less than or equal to 192 kbps. The combined bit rate of a main service and an associated service which are intended to be decoded simultaneously shall be less than or equal to 576 kbps.

5.4 Audio Coding Modes

Audio services shall be encoded using any of the audio coding modes specified in A/52 [3], with the exception of the 1+1 mode. The value of acmod in the AC-3 bit stream shall have a value in the range of 1–7, with the value 0 prohibited.

5.5 Dialogue Level

The value of the dialnorm parameter in the AC-3 elementary bit stream shall indicate the level of average spoken dialogue within the encoded audio program. Dialogue level may be measured by means of an "A" weighted integrated measurement (LAeq) (ANSI S1.4) [2]. (Receivers use the value of dialnorm to adjust the reproduced audio level so as to normalize the dialogue level.)

[1] Either via AES3 [1] signals or embedded in the corresponding video.

Exhibit 1015
TCL v. Maxell - IPR2025-00134
Page 122 of 136

5.6 Dynamic Range Compression

Each encoded audio block may contain a dynamic range control word (dynrng) that is used by decoders (by default) to alter the level of the reproduced audio. The control words allow the decoded signal level to be increased or decreased by up to 24 dB. In general, elementary streams may have dynamic range control words inserted or modified without affecting the encoded audio. When it is necessary to alter the dynamic range of audio programs which are broadcast, the dynamic range control word should be used.

5.7 STD Audio Buffer Size

The main audio buffer (BSn, see A/52 Annex A [3]) shall be 2592 bytes.

6. MAIN AND ASSOCIATED SERVICES

An AC-3 elementary stream contains the encoded representation of a single audio service. Multiple audio services are provided by multiple elementary streams. Each elementary stream is conveyed by the transport multiplex with a unique PID. There are a number of audio service types which may (individually) be coded into each elementary stream. Each AC-3 elementary stream is tagged as to its service type using the bsmod bit field. There are two types of *main service* and six types of *associated service*. Each associated service may be tagged (in the AC-3 audio descriptor in the transport PSI data) as being associated with one or more main audio services. Each AC-3 elementary stream may also be tagged with a language code.

Associated services may contain complete program mixes, or may contain only a single program element. Associated services which are complete mixes may be decoded and used as is. They are identified by the full_svc bit in the AC-3 descriptor (see A/52, Annex A [3]). Associated services which contain only a single program element are intended to be combined with the program elements from a main audio service.

This section specifies the meaning and use of each type of service. In general, a complete audio program (what is presented to the listener over the set of loudspeakers) may consist of a main audio service, an associated audio service that is a complete mix, or a main audio service combined with an associated audio service. The capability to simultaneously decode one main service and one associated service is required in order to form a complete audio program in certain service combinations described in this section. This capability may not exist in some receivers.

6.1 Summary of Service Types

The audio service types are listed in Table 6.1.

Exhibit 1015
TCL v. Maxell - IPR2025-00134
Page 123 of 136

Table 6.1 Audio Service Types

bsmod	Type of Service
‘000’ (0)	Main audio service: complete main (CM)
‘001’ (1)	Main audio service: music and effects (ME)
‘010’ (2)	Associated service: visually impaired (VI)
‘011’ (3)	Associated service: hearing impaired (HI)
‘100’ (4)	Associated service: dialogue (D)
‘101’ (5)	Associated service: commentary (C)
‘110’ (6)	Associated service: emergency (E)
‘111’ (7)	Associated service: voice-over (VO)

6.2 Complete Main Audio Service (CM)

The CM type of main audio service contains a complete audio program (complete with dialogue, music, and effects). This is the type of audio service normally provided. The CM service may contain from 1 to 5.1 audio channels. The CM service may be further enhanced by means of the VI, HI, C, E, or VO associated services described below. Audio in multiple languages may be provided by supplying multiple CM services, each in a different language.

6.3 Main Audio Service, Music and Effects (ME)

The ME type of main audio service contains the music and effects of an audio program, but not the dialogue for the program. The ME service may contain from 1 to 5.1 audio channels. The primary program dialogue is missing and (if any exists) is supplied by simultaneously encoding a D associated service. Multiple D associated services in different languages may be associated with a single ME service.

6.4 Visually Impaired (VI)

The VI associated service typically contains a narrative description of the visual program content. In this case, the VI service shall be a single audio channel. The simultaneous reproduction of both the VI associated service and the CM main audio service allows the visually impaired user to enjoy the main multi-channel audio program, as well as to follow (by ear) the on-screen activity.

The dynamic range control signal in this type of VI service is intended to be used by the audio decoder to modify the level of the main audio program. Thus the level of the main audio service will be under the control of the VI service provider, and the provider may signal the decoder (by altering the dynamic range control words embedded in the VI audio elementary stream) to reduce the level of the main audio service by up to 24 dB in order to assure that the narrative description is intelligible.

Besides providing the VI service as a single narrative channel, the VI service may be provided as a complete program mix containing music, effects, dialogue, and the narration. In this case, the service may be coded using any number of channels (up to 5.1), and the dynamic range control signal applies only to this service. The fact that the service is a complete mix shall be indicated in the AC-3 descriptor (see A/52, Annex A [3]).

Exhibit 1015
TCL v. Maxell - IPR2025-00134
Page 124 of 136

6.5 Hearing Impaired (HI)

The HI associated service typically contains only dialogue which is intended to be reproduced simultaneously with the CM service. In this case, the HI service shall be a single audio channel. This dialogue may have been processed for improved intelligibility by hearing impaired listeners. Simultaneous reproduction of both the CM and HI services allows the hearing impaired listener to hear a mix of the CM and HI services in order to emphasize the dialogue while still providing some music and effects.

Besides providing the HI service as a single dialogue channel, the HI service may be provided as a complete program mix containing music, effects, and dialogue with enhanced intelligibility. In this case, the service may be coded using any number of channels (up to 5.1). The fact that the service is a complete mix shall be indicated in the AC-3 descriptor (see A/52, Annex A [3]).

6.6 Dialogue (D)

The D associated service contains program dialogue intended for use with an ME main audio service. The language of the D service is indicated in the AC-3 bit stream, and in the audio descriptor. A complete audio program is formed by simultaneously decoding the D service and the ME service and mixing the D service into the center channel of the ME main service (with which it is associated).

If the ME main audio service contains more than two audio channels, the D service shall be monophonic (1/0 mode). If the main audio service contains two channels, the D service may also contain two channels (2/0 mode). In this case, a complete audio program is formed by simultaneously decoding the D service and the ME service, mixing the left channel of the ME service with the left channel of the D service, and mixing the right channel of the ME service with the right channel of the D service. The result will be a two channel stereo signal containing music, effects, and dialogue.

Audio in multiple languages may be provided by supplying multiple D services (each in a different language) along with a single ME service. This is more efficient than providing multiple CM services, but, in the case of more than two audio channels in the ME service, requires that dialogue be restricted to the center channel.

Some receivers may not have the capability to simultaneously decode an ME and a D service.

6.7 Commentary (C)

The commentary associated service is similar to the D service, except that instead of conveying essential program dialogue, the C service conveys optional program commentary. The C service may be a single audio channel containing only the commentary content. In this case, simultaneous reproduction of a C service and a CM service will allow the listener to hear the added program commentary.

The dynamic range control signal in the single channel C service is intended to be used by the audio decoder to modify the level of the main audio program. Thus the level of the main audio service will be under the control of the C service provider, and the provider may signal the decoder (by altering the dynamic range control words embedded in the C audio elementary

Exhibit 1015
TCL v. Maxell - IPR2025-00134
Page 125 of 136

stream) to reduce the level of the main audio service by up to 24 dB in order to assure that the commentary is intelligible.

Besides providing the C service as a single commentary channel, the C service may be provided as a complete program mix containing music, effects, dialogue, and the commentary. In this case the service may be provided using any number of channels (up to 5.1). The fact that the service is a complete mix shall be indicated in the AC-3 descriptor (see A/52, Annex A [3]).

6.8 Emergency (E)

The E associated service is intended to allow the insertion of emergency or high priority announcements. The E service is always a single audio channel. An E service is given priority in transport and in audio decoding. Whenever the E service is present, it will be delivered to the audio decoder. Whenever the audio decoder receives an E type associated service, it will stop reproducing any main service being received and only reproduce the E service out of the center channel (or left and right channels if a center loudspeaker does not exist). The E service may also be used for non-emergency applications. It may be used whenever the broadcaster wishes to force all decoders to quit reproducing the main audio program and reproduce a higher priority single audio channel.

6.9 Voice-Over (V0)

The VO associated service is a single channel service intended to be reproduced along with the main audio service in the receiver. It allows typical voice-overs to be added to an already encoded audio elementary stream without requiring the audio to be decoded back to baseband and then re-encoded. It is always a single audio channel. It has second priority (only the E service has higher priority). It is intended to be simultaneously decoded and mixed into the center channel of the main audio service. The dynamic range control signal in the VO service is intended to be used by the audio decoder to modify the level of the main audio program. Thus the level of the main audio service may be controlled by the broadcaster, and the broadcaster may signal the decoder (by altering the dynamic range control words embedded in the VO audio elementary stream) to reduce the level of the main audio service by up to 24 dB during the voice-over.

Some receivers may not have the capability to simultaneously decode and reproduce a voice-over service along with a program audio service.

7. AUDIO ENCODER INTERFACES

7.1 Audio Encoder Input Characteristics

Audio signals which are input to the digital television system may be in analog or digital form. Audio signals should have any dc offset removed before being encoded. If the audio encoder does not include a dc blocking high-pass filter, the audio signals should be high-pass-filtered before being applied to the encoder. In general, input signals should be quantized to at least 16-bit resolution. The audio compression system can convey audio signals with up to 24-bit resolution. Physical interfaces for the audio inputs to the encoder may be defined as voluntary industry standards by the AES, SMPTE, or other standards organizations.

Exhibit 1015
TCL v. Maxell - IPR2025-00134
Page 126 of 136

7.2 Audio Encoder Output Characteristics

Conceptually, the output of the audio encoder is an elementary stream which is formed into PES packets within the transport subsystem. It is possible that systems will be implemented wherein the formation of audio PES packets takes place within the audio encoder. In this case, the output(s) of the audio encoder(s) would be PES packets. Physical interfaces for these outputs (elementary streams and/or PES packets) may be defined as voluntary industry standards by SMPTE or other standards organizations.

End of Part 5

Exhibit 1015
TCL v. Maxell - IPR2025-00134
Page 127 of 136

Doc. A/53, Part 6:2007
3 January 2007

ATSC Digital Television Standard
Part 6 - Enhanced AC-3 Audio System Characteristics
(A/53, Part 6:2007)

Advanced Television Systems Committee
1750 K Street, N.W.
Suite 1200
Washington, D.C. 20006
www.atsc.org

The Advanced Television Systems Committee, Inc., is an international, non-profit organization developing voluntary standards for digital television. The ATSC member organizations represent the broadcast, broadcast equipment, motion picture, consumer electronics, computer, cable, satellite, and semiconductor industries.

Specifically, ATSC is working to coordinate television standards among different communications media focusing on digital television, interactive systems, and broadband multimedia communications. ATSC is also developing digital television implementation strategies and presenting educational seminars on the ATSC standards.

ATSC was formed in 1982 by the member organizations of the Joint Committee on InterSociety Coordination (JCIC): the Electronic Industries Association (EIA), the Institute of Electrical and Electronic Engineers (IEEE), the National Association of Broadcasters (NAB), the National Cable Television Association (NCTA), and the Society of Motion Picture and Television Engineers (SMPTE). Currently, there are approximately 140 members representing the broadcast, broadcast equipment, motion picture, consumer electronics, computer, cable, satellite, and semiconductor industries.

ATSC Digital TV Standards include digital high definition television (HDTV), standard definition television (SDTV), data broadcasting, multichannel surround-sound audio, and satellite direct-to-home broadcasting.

Exhibit 1015
TCL v. Maxell - IPR2025-00134
Page 129 of 136

Table of Contents

1. SCOPE 5

2. REFERENCES 5

2.1 Normative References 5

2.2 Informative References 5

3. COMPLIANCE NOTATION 5

3.1 Treatment of Syntactic Elements 6

3.2 Symbols, Abbreviations, and Mathematical Operators 6

4. SYSTEM OVERVIEW 6

5. SPECIFICATION 6

5.1 Constraints With Respect to ATSC Standard A/52B Annex E 7

5.2 Sampling Frequency 7

5.3 Frame Size 7

5.4 Audio Coding Modes 7

5.5 Dialogue Level 8

5.6 Dynamic Range Compression - Artistic 8

5.7 Dynamic Range Compression - Heavy 8

6. MAIN AND ASSOCIATED SERVICES 8

6.1 Summary of Service Types 8

6.2 Complete Main Audio Service (CM) 9

6.3 Visually Impaired (VI) 9

6.4 Hearing Impaired (HI) 9

6.5 Commentary (C) 9

7. AUDIO ENCODER INTERFACES 9

Exhibit 1015
TCL v. Maxell - IPR2025-00134
Page 130 of 136

Index of Tables and Figures

Table 5.1 Audio Constraints 7
Table 6.1 Audio Service Types 9

Figure 4.1 Audio subsystem in the digital television system. 6

Exhibit 1015
TCL v. Maxell - IPR2025-00134
Page 131 of 136

ATSC Digital Television Standard – Part 6: Enhanced AC-3 Audio System Characteristics

1. SCOPE

This Part describes the robust mode audio system characteristics and normative specifications of the Digital Television Standard. Audio encoded per this Part may be transmitted over a TS-E (see A/53-3 [4]).

2. REFERENCES

All standards are subject to revision and amendment, and parties to agreement based on this standard are encouraged to investigate the possibility of applying the most recent editions of the documents listed below.

2.1 Normative References

The following documents contain provisions which in whole or part, through reference in this text, constitute provisions of this standard. At the time of publication, the editions indicated were valid.

[1] ATSC: "Digital Audio Compression (AC-3, E-AC-3) Standard," Doc. A/52B, Advanced Television Systems Committee, Washington, D.C. 14 June 2005.

[2] AES: "AES Recommended Practice for digital audio engineering—Serial transmission format for two-channel linearly represented digital audio data," Doc. AES3-2003, Audio Engineering Society, New York, N.Y., 2003. (This document is a revision of AES3-1992.)

[3] ANSI: "Specification for Sound Level Meters," Doc. ANSI S1.4-1983 (R 2001) with Amd.S1.4A-1995, American National Standards Institute, Washington, D.C., 2001.

2.2 Informative References

[4] ATSC: "ATSC Digital Television Standard, Part 3 – Service Multiplex and Transport Subsystem Characteristics," Doc. A/53, Part 3:2007, Advanced Television Systems Committee, Washington, D.C., 3 January 2007.

[5] ATSC: "ATSC Digital Television Standard, Part 5 – AC-3 Audio System Characteristics," Doc. A/53, Part 5:2007, Advanced Television Systems Committee, Washington, D.C., 3 January 2007.

[6] ATSC: "Digital Television Standard, Part 1 – Digital Television System," Doc. A/53, Part 1:2007, Advanced Television Systems Committee, Washington, D.C., 3 January 2007.

3. COMPLIANCE NOTATION

As used in this document, "shall" or "will", denotes a mandatory provision of the standard. "Should" denotes a provision that is recommended but not mandatory. "May" denotes a feature whose presence does not preclude compliance, and that may or may not be present at the option of the implementer.

Exhibit 1015
TCL v. Maxell - IPR2025-00134
Page 132 of 136

3.1 Treatment of Syntactic Elements

This document contains symbolic references to syntactic elements used in the audio, video, and transport coding subsystems. These references are typographically distinguished by the use of a different font (e.g., restricted), may contain the underscore character (e.g., sequence_end_code) and may consist of character strings that are not English words (e.g., dynrng).

3.2 Symbols, Abbreviations, and Mathematical Operators

The symbols, abbreviations, and mathematical operators used herein are as found in Section 3.4 of ATSC A/53 Part 1 [5].

4. SYSTEM OVERVIEW

As illustrated in Figure 4.1, the audio subsystem comprises the audio encoding/decoding function and resides between the audio inputs/outputs and the transport subsystem. The audio encoder(s) is (are) responsible for generating the audio elementary stream(s) which are encoded representations of the baseband audio input signals. At the receiver, the audio subsystem is responsible for decoding the audio elementary stream(s) back into baseband audio.

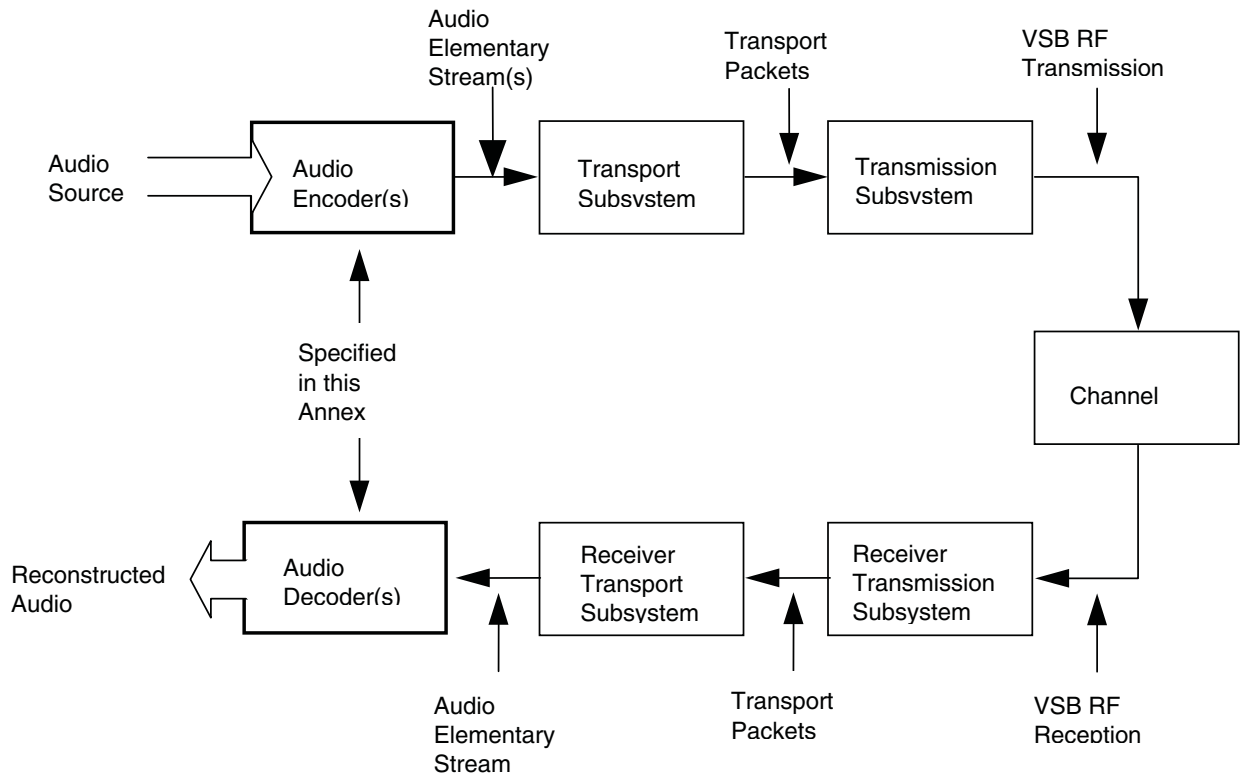

Figure 4.1 Audio subsystem in the digital television system.

5. SPECIFICATION

This Section forms the normative specification for the robust mode audio system that may be transmitted as part of TS-E (see A/53-3 [4]). The robust mode audio compression system

Exhibit 1015
TCL v. Maxell - IPR2025-00134
Page 133 of 136

conforms to Annex E of the A/52 [1] Digital Audio Compression (AC-3) Standard, subject to the constraints outlined in this Section.

5.1 Constraints With Respect to ATSC Standard A/52 Annex E

The robust mode digital television audio coding system shall use the Enhanced AC-3 Digital Audio Compression Standard specified in Annex E of ATSC Doc. A/52 [1], and as constrained by this Part. Audio bit streams encoded per that specification may be included the TS-E that is delivered by E-VSB. Constraints on the robust mode audio system shall be as shown in Table 5.1, which shows permitted values of certain syntactical elements. These constraints are further described in Sections 5.2 – 5.4, and Section 6.

Table 5.1 Audio Constraints

AC-3 Syntactical Element	Comment	Allowed value
fscod	Indicates sampling rate	'00' (indicates 48 kHz)
frmsize	Indicates the size of the audio frame	≤ '011 1000 0000' (indicates a frame size ≤ 448 kb/s for a six block frame)
bstyp	Indicates an independent stream (no sub-streams)	'00'
acmod	Indicates number of channels, prohibits 1+1 mode	≥ '001'
bsmod	Restricts audio service types to CM, VI, HI, C	0, 2, 3, or 5

5.2 Sampling Frequency

The system conveys digital audio sampled at a frequency of 48 kHz that shall be locked to the 27 MHz MPEG-2 system clock. The 48 kHz audio sampling clock is defined as:

$$48 \text{ kHz audio sample rate} = (2 \div 1125) \times (27 \text{ MHz MPEG-2 system clock})$$

If analog signal inputs are employed[1], the A/D converters shall sample at 48 kHz locked to the 27 MHz clock. If digital inputs are employed, the input sampling rate shall be 48 kHz locked to the system clock, or the audio encoder shall contain sampling rate converters which convert the sampling rate to 48 kHz locked to the system clock.

5.3 Frame Size

The audio frame size shall be less than or equal to 1792 bytes. This implies a bit-rate limitation of 448 kb/s for AC-3 frames of 1536 samples (32 msec at 48 kHz).

5.4 Audio Coding Modes

Audio services shall be encoded using any of the audio coding modes specified in A/52, with the exception of the 1+1 mode. The value of acmod in the AC-3 bit stream shall have a value in the range of 1–7, with the value 0 prohibited.

[1] Either via AES3 [2] signals or embedded in the corresponding video.

Exhibit 1015
TCL v. Maxell - IPR2025-00134
Page 134 of 136

5.5 Dialogue Level

The value of the dialnorm parameter in the AC-3 elementary bit stream shall indicate the level of average spoken dialogue within the encoded audio program. Dialogue level may be measured by means of an "A" weighted integrated measurement (LAeq) [3]. (Receivers use the value of dialnorm to adjust the reproduced audio level so as to normalize the dialogue level.) In order to enable clean switching (i.e., without level shifts) between main and fallback audio services (that might have a different number of audio channels), linked audio services shall have values of dialnorm that result in matched dialogue levels when decoded by compliant decoders.

5.6 Dynamic Range Compression - Artistic

Each encoded audio block may contain a dynamic range control word (dynrng) that is used by decoders (by default) to alter the level of the reproduced audio. The control words allow the decoded signal level to be increased or decreased by up to 24 dB. In general, elementary streams may have dynamic range control words inserted or modified without affecting the encoded audio. When it is necessary to alter the dynamic range of audio programs that are broadcast, the dynamic range control word should be used. In order to enable clean switching between main and fallback audio services (that might have a different number of audio channels), linked audio services shall have values of dynrng that result in matched audio levels when decoded by compliant decoders.

5.7 Dynamic Range Compression - Heavy

Each encoded audio frame may contain a dynamic range control word (compr) that may be optionally used by decoders to render the audio with a very narrow dynamic range. The control words allow the decoded signal level to be increased or decreased by up to 48 dB. In order to enable clean switching between main and fallback audio services (that might have a different number of audio channels), linked audio services shall have values of compr that result in matched audio levels when decoded by compliant decoders.

6. MAIN AND ASSOCIATED SERVICES

An AC-3 elementary stream contains the encoded representation of a single audio service. Multiple audio services are provided by multiple elementary streams. Each elementary stream is conveyed by the transport multiplex with a unique PID. There are a number of audio service types that may (individually) be coded into each elementary stream. Each AC-3 elementary stream is tagged as to its service type using the bsmod bit field. There is a *complete main service* and there are three types of *associated services*.

Associated services delivered in a TS-E shall contain complete program mixes containing all audio program elements (dialog, music, effects, etc.) that are intended to be presented to a listener. This is indicated by the full_svc bit in the AC-3 descriptor being set to a value of '1' (see A/53-3 [4] and A/52, Annex A [1]).

This section specifies the meaning and use of each type of service.

6.1 Summary of Service Types

The audio service types shall be as listed in Table 6.1.

Exhibit 1015
TCL v. Maxell - IPR2025-00134
Page 135 of 136

Table 6.1 Audio Service Types

bsmod	Type of Service
‘000’ (0)	Main audio service: complete main (CM)
‘010’ (2)	Associated service: visually impaired (VI)
‘011’ (3)	Associated service: hearing impaired (HI)
‘101’ (5)	Associated service: commentary (C)

6.2 Complete Main Audio Service (CM)

The CM type of main audio service shall contain a complete audio program (complete with dialogue, music, and effects). This is the type of audio service normally provided. The CM service may contain from 1 to 5.1 audio channels. Audio in multiple languages may be provided by supplying multiple CM services, each in a different language.

6.3 Visually Impaired (VI)

The VI associated service a complete program mix containing music, effects, dialogue, and additionally a narration that describes the picture content. The VI service may be coded using any number of channels (up to 5.1).

6.4 Hearing Impaired (HI)

The HI service is a complete program mix containing music, effects, and dialogue with enhanced intelligibility. The HI service may be coded using any number of channels (up to 5.1).

6.5 Commentary (C)

The commentary associated service is a complete program mix containing music, effects, dialogue, and additionally some special commentary. This service may be provided using any number of channels (up to 5.1).

7. AUDIO ENCODER INTERFACES

See A/53-5 [5], Section 7.

End of Part 6

Exhibit 1015
TCL v. Maxell - IPR2025-00134
Page 136 of 136