US 20010055951A1

(19) United States

(12) Patent Application Publication

(10) Pub. No.: US 2001/0055951 A1

(43) Pub. Date: Dec. 27, 2001

Slotznick

(54) TELEPHONE DEVICE WITH ENHANCED AUDIO-VISUAL FEATURES FOR INTERACTING WITH NEARBY DISPLAYS AND DISPLAY SCREENS

(76) Inventor: **Benjamin Slotznick**, Mt. Gretna, PA (US)

Correspondence Address:
AKIN, GUMP, STRAUSS, HAUER & FELD, L.L.P.
ONE COMMERCE SQUARE
2005 MARKET STREET, SUITE 2200
PHILADELPHIA, PA 19103 (US)

(21) Appl. No.: **09/880,168**

(22) Filed: **Jun. 13, 2001**

Related U.S. Application Data

(63) Non-provisional of provisional application No. 60/211,596, filed on Jun. 15, 2000.

Publication Classification

(51) Int. Cl.[7] **H04B 5/00**

(52) U.S. Cl. **455/41**; 455/502; 455/67.7

(57) **ABSTRACT**

A telephone device is used to establish two-way communication with a remotely located entity, or to transfer content from a display screen of the telephone device to a nearby display screen for full viewing of the content. The two-way communication is initiated by an object emitting a signal containing a telephone number to the telephone device, which, in turn, automatically dials the telephone number. Alternatively, the object emits a signal containing an electronic address to a telephone device, which, in turn, automatically goes to the electronic address. Transfer of content also is achieved by transmitting an electronic address of content shown on a telephone device display screen to a nearby device which retrieves the content and then displays it on the nearby display screen.

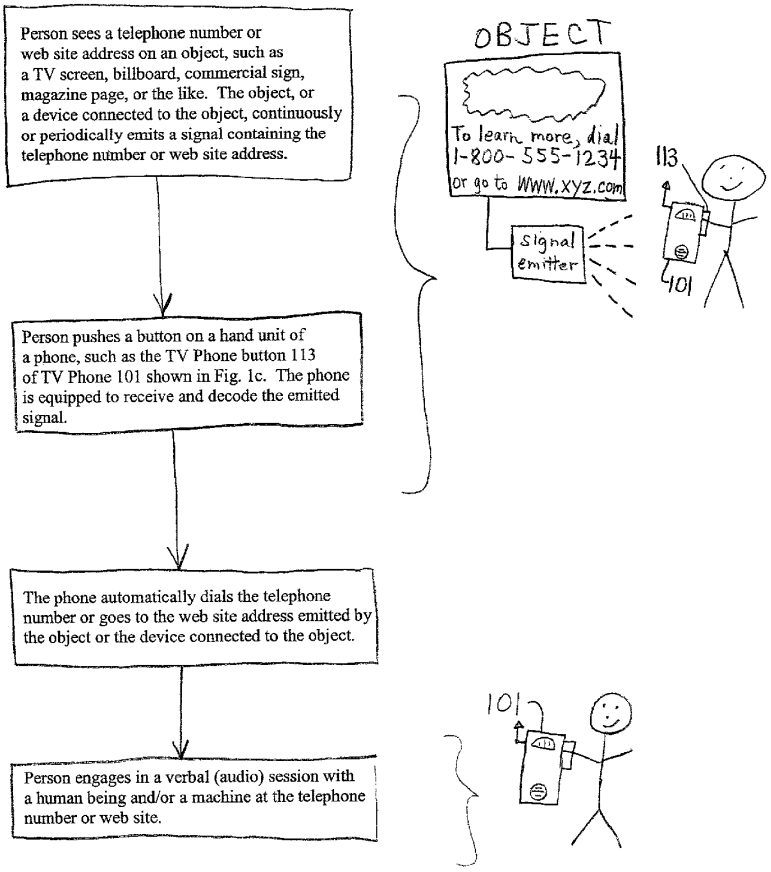

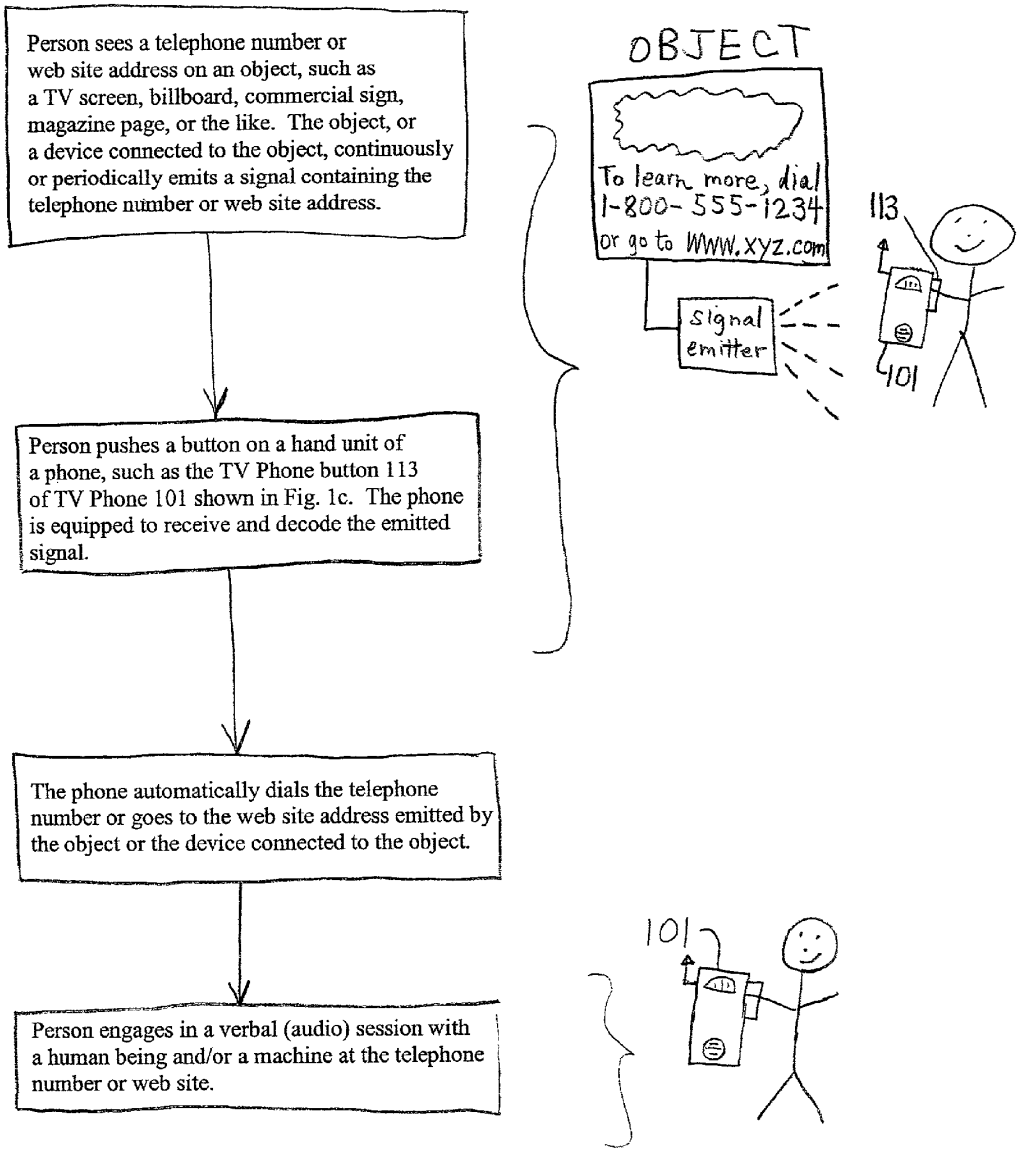
Person sees a telephone number or web site address on an object, such as a TV screen, billboard, commercial sign, magazine page, or the like. The object, or a device connected to the object, continuously or periodically emits a signal containing the telephone number or web site address.
OBJECT
To learn more, dial 1-800-555-1234 or go to WWW.XYZ.com
signal emitter
113
101
Person pushes a button on a hand unit of a phone, such as the TV Phone button 113 of TV Phone 101 shown in Fig. 1c. The phone is equipped to receive and decode the emitted signal.
The phone automatically dials the telephone number or goes to the web site address emitted by the object or the device connected to the object.
101
Person engages in a verbal (audio) session with a human being and/or a machine at the telephone number or web site.

Fig. 1A

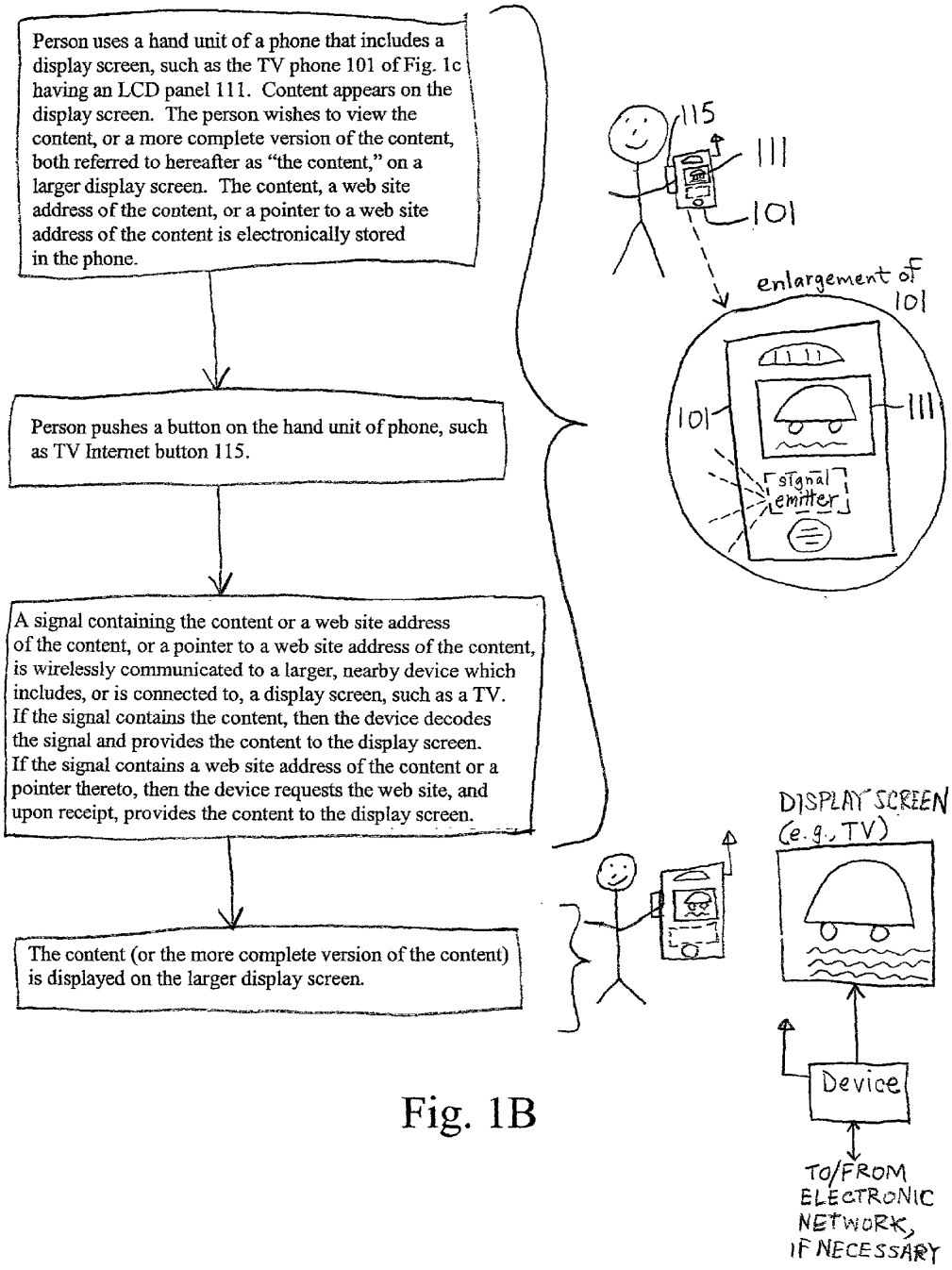
Person uses a hand unit of a phone that includes a display screen, such as the TV phone 101 of Fig. 1c having an LCD panel 111. Content appears on the display screen. The person wishes to view the content, or a more complete version of the content, both referred to hereafter as "the content," on a larger display screen. The content, a web site address of the content, or a pointer to a web site address of the content is electronically stored in the phone.
Person pushes a button on the hand unit of phone, such as TV Internet button 115.
A signal containing the content or a web site address of the content, or a pointer to a web site address of the content, is wirelessly communicated to a larger, nearby device which includes, or is connected to, a display screen, such as a TV. If the signal contains the content, then the device decodes the signal and provides the content to the display screen. If the signal contains a web site address of the content or a pointer thereto, then the device requests the web site, and upon receipt, provides the content to the display screen.
The content (or the more complete version of the content) is displayed on the larger display screen.
115
111
101
enlargement of 101
101
111
signal emitter
DISPLAY SCREEN (e.g., TV)
Device
TO/FROM ELECTRONIC NETWORK, IF NECESSARY

Fig. 1B

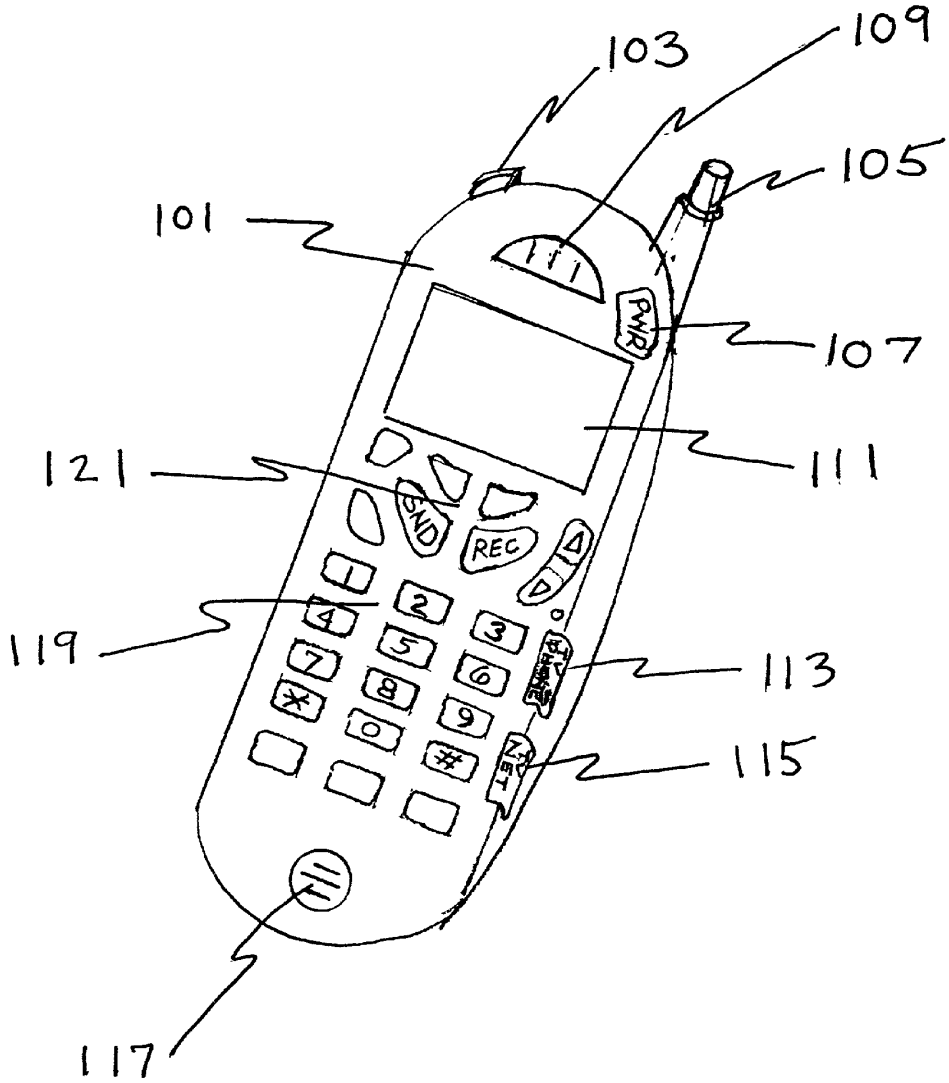

Fig. 1C

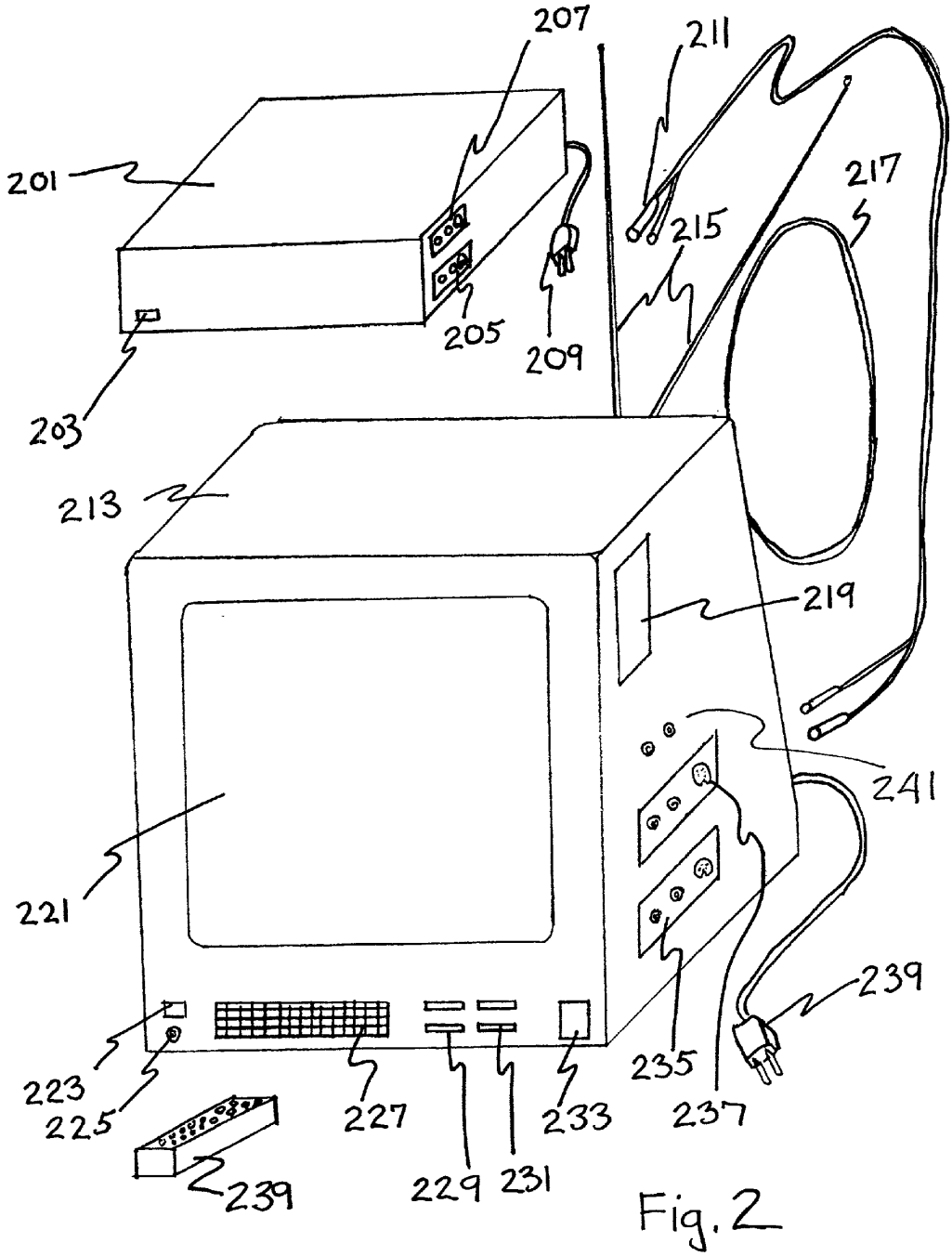
207
211
201
217
215
205
209
203
213
219
241
221
239
223
225
227
233
235
237
239
229
231

Fig. 2

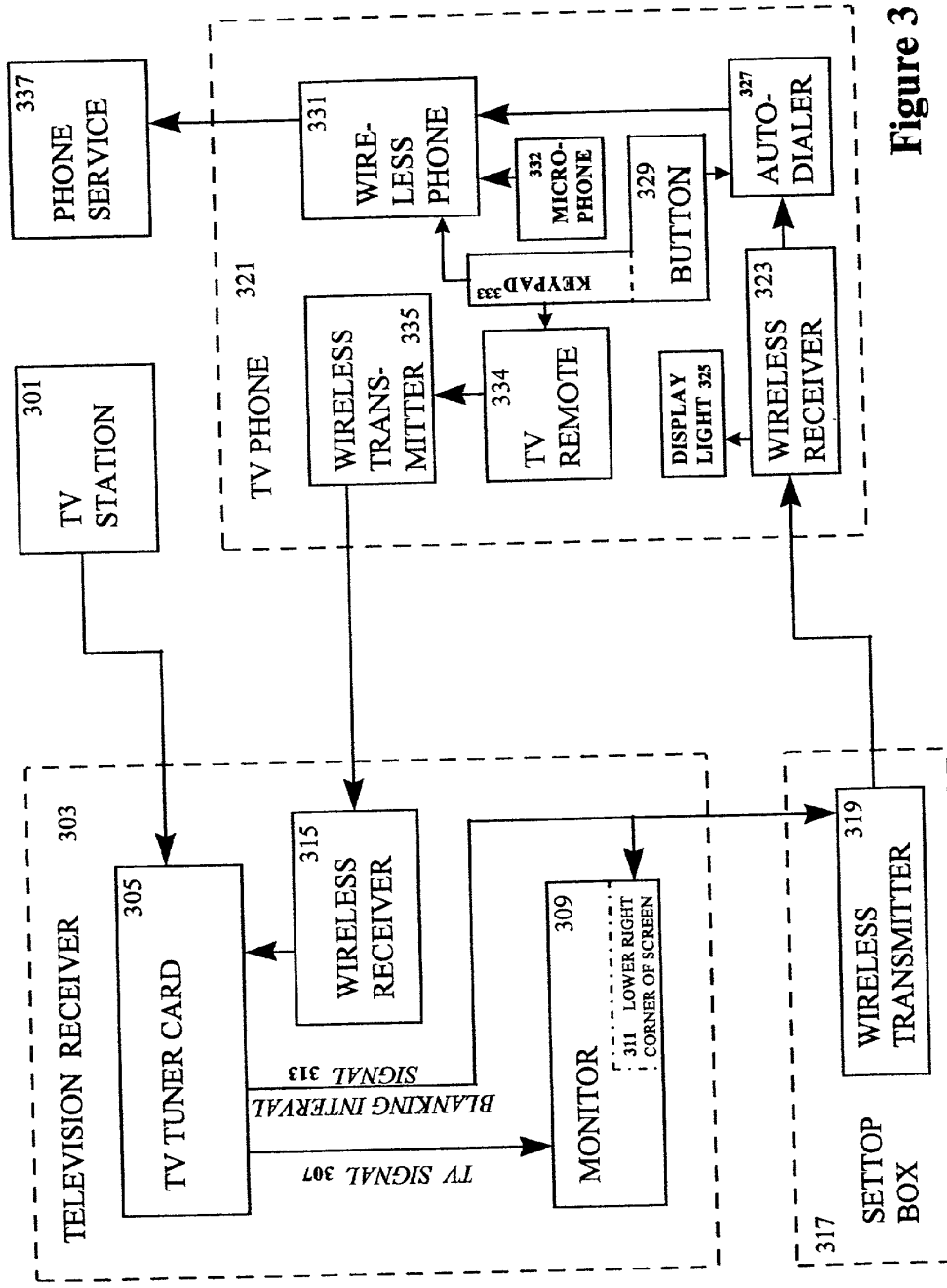
337
PHONE SERVICE
301
TV STATION
TV PHONE
321
331
WIRE-LESS PHONE
332
MICRO-PHONE
329
BUTTON
327
AUTO-DIALER
KEYPAD 333
WIRELESS TRANS-MITTER 335
334
TV REMOTE
DISPLAY LIGHT 325
323
WIRELESS RECEIVER
TELEVISION RECEIVER
303
305
TV TUNER CARD
315
WIRELESS RECEIVER
BLANKING INTERVAL SIGNAL 313
TV SIGNAL 307
309
MONITOR
311 LOWER RIGHT CORNER OF SCREEN
319
WIRELESS TRANSMITTER
317
SETTOP BOX

Figure 3

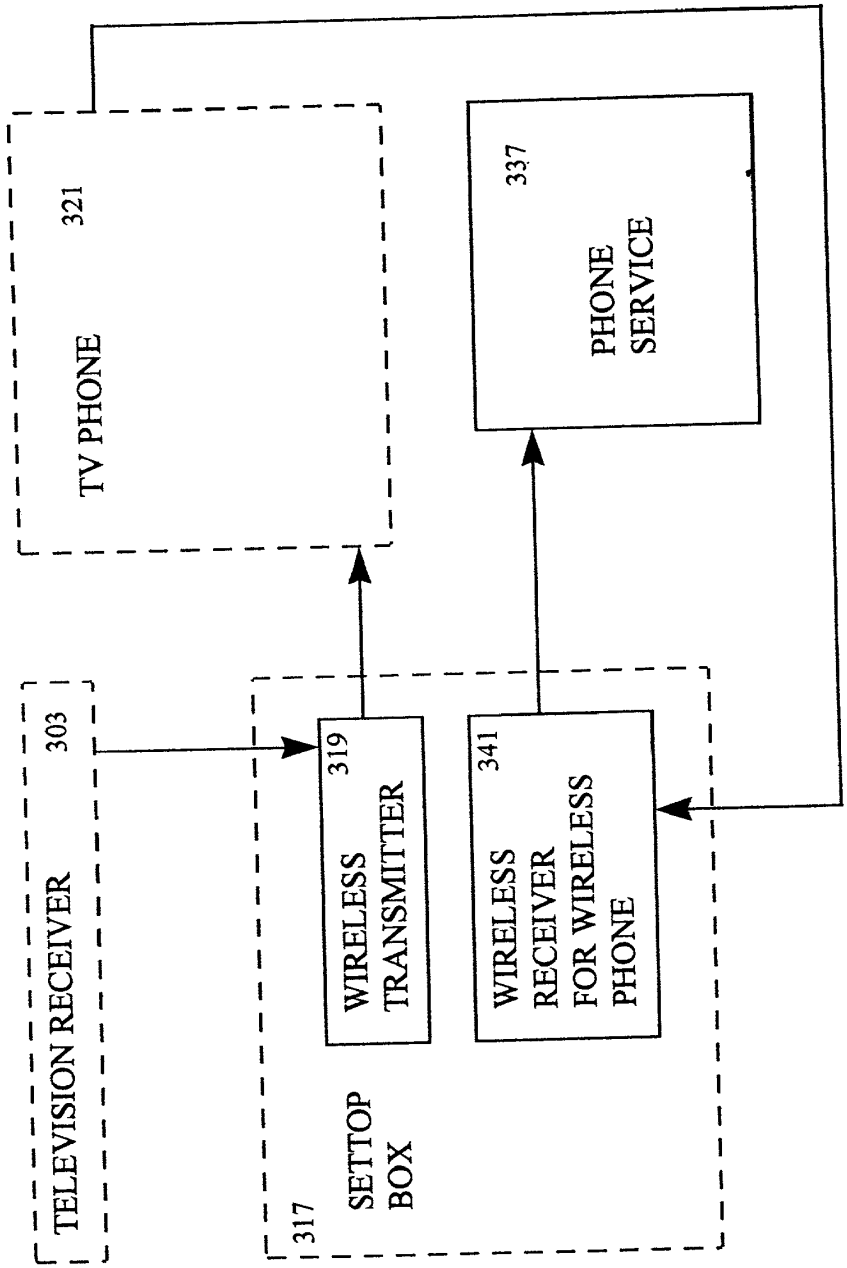
TELEVISION RECEIVER
303
TV PHONE
321
SETTOP BOX
317
WIRELESS TRANSMITTER
319
WIRELESS RECEIVER FOR WIRELESS PHONE
341
PHONE SERVICE
337

Figure 4

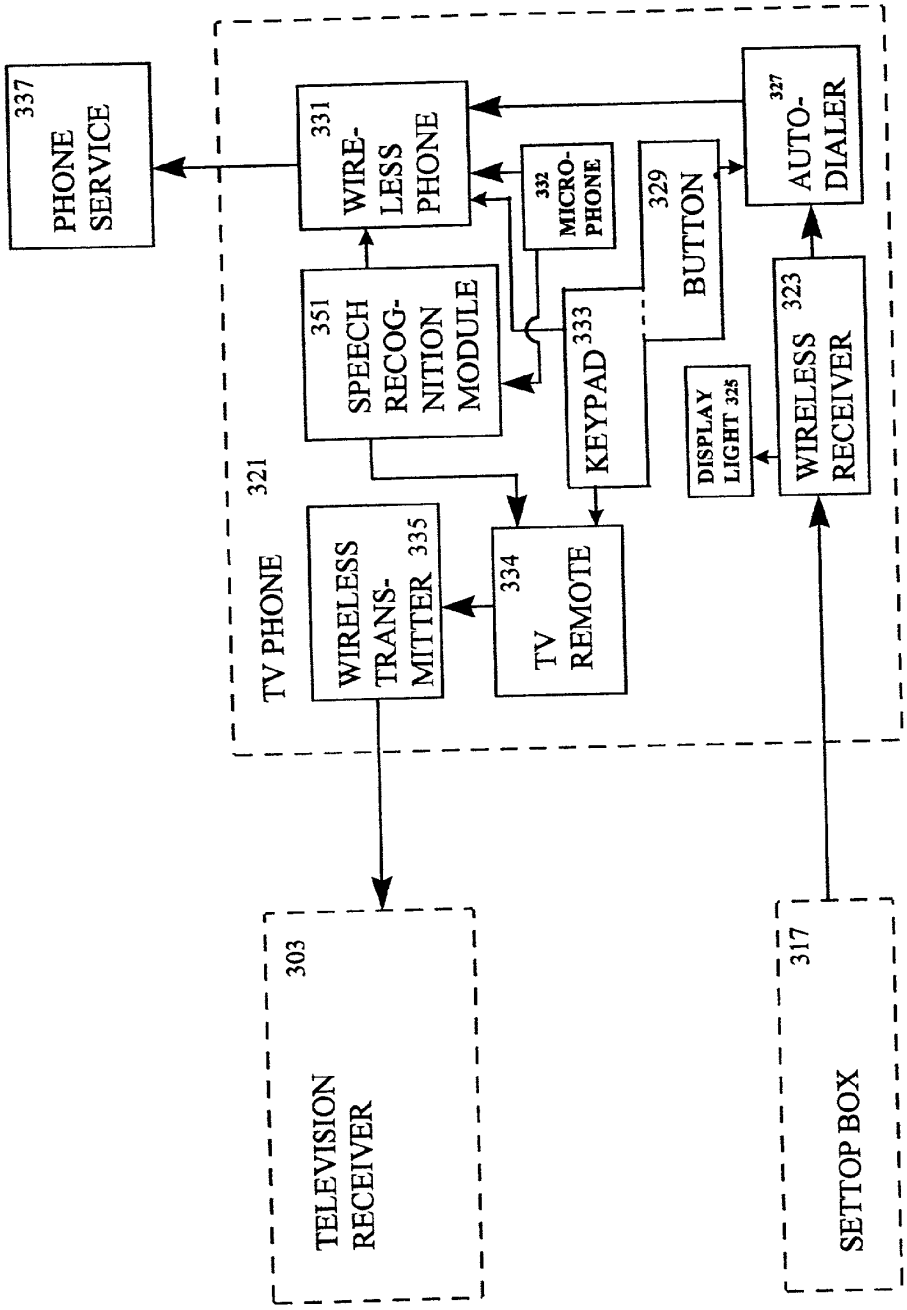
337
PHONE SERVICE
331
WIRE-LESS PHONE
332
MICRO-PHONE
329
BUTTON
327
AUTO-DIALER
351
SPEECH RECOG-NITION MODULE
333
KEYPAD
DISPLAY LIGHT 325
323
WIRELESS RECEIVER
321
TV PHONE
WIRELESS TRANS-MITTER 335
334
TV REMOTE
303
TELEVISION RECEIVER
317
SETTOP BOX

Figure 5

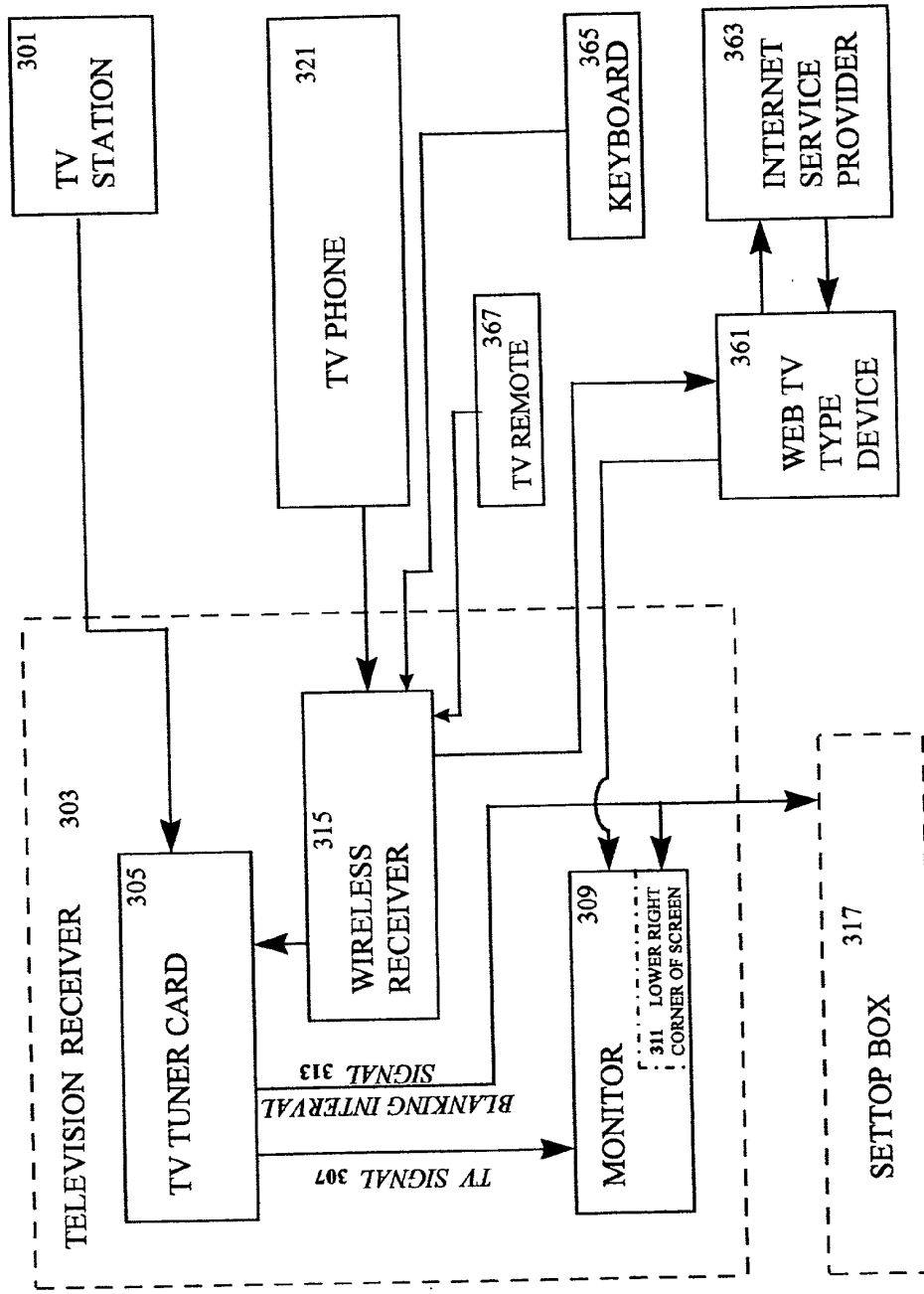
301
TV STATION
321
TV PHONE
365
KEYBOARD
363
INTERNET SERVICE PROVIDER
367
TV REMOTE
361
WEB TV TYPE DEVICE
TELEVISION RECEIVER
303
305
TV TUNER CARD
315
WIRELESS RECEIVER
309
MONITOR
311 LOWER RIGHT CORNER OF SCREEN
317
SETTOP BOX
BLANKING INTERVAL SIGNAL 313
TV SIGNAL 307

Figure 6

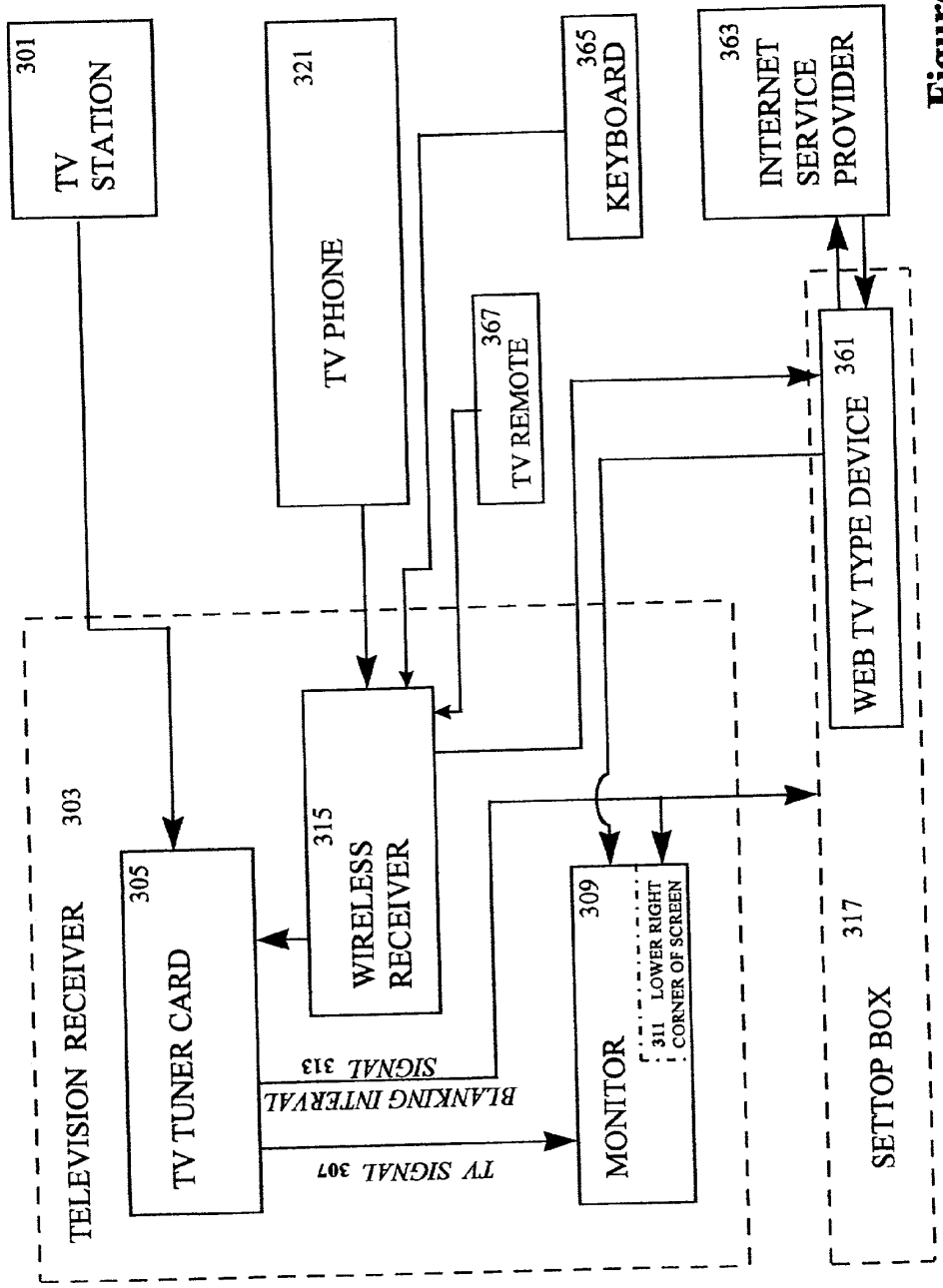
301
TV STATION
321
TV PHONE
365
KEYBOARD
363
INTERNET SERVICE PROVIDER
367
TV REMOTE
361
WEB TV TYPE DEVICE
TELEVISION RECEIVER
303
305
TV TUNER CARD
315
WIRELESS RECEIVER
309
MONITOR
311 LOWER RIGHT CORNER OF SCREEN
317
SETTOP BOX
BLANKING INTERVAL SIGNAL 313
TV SIGNAL 307

Figure 7

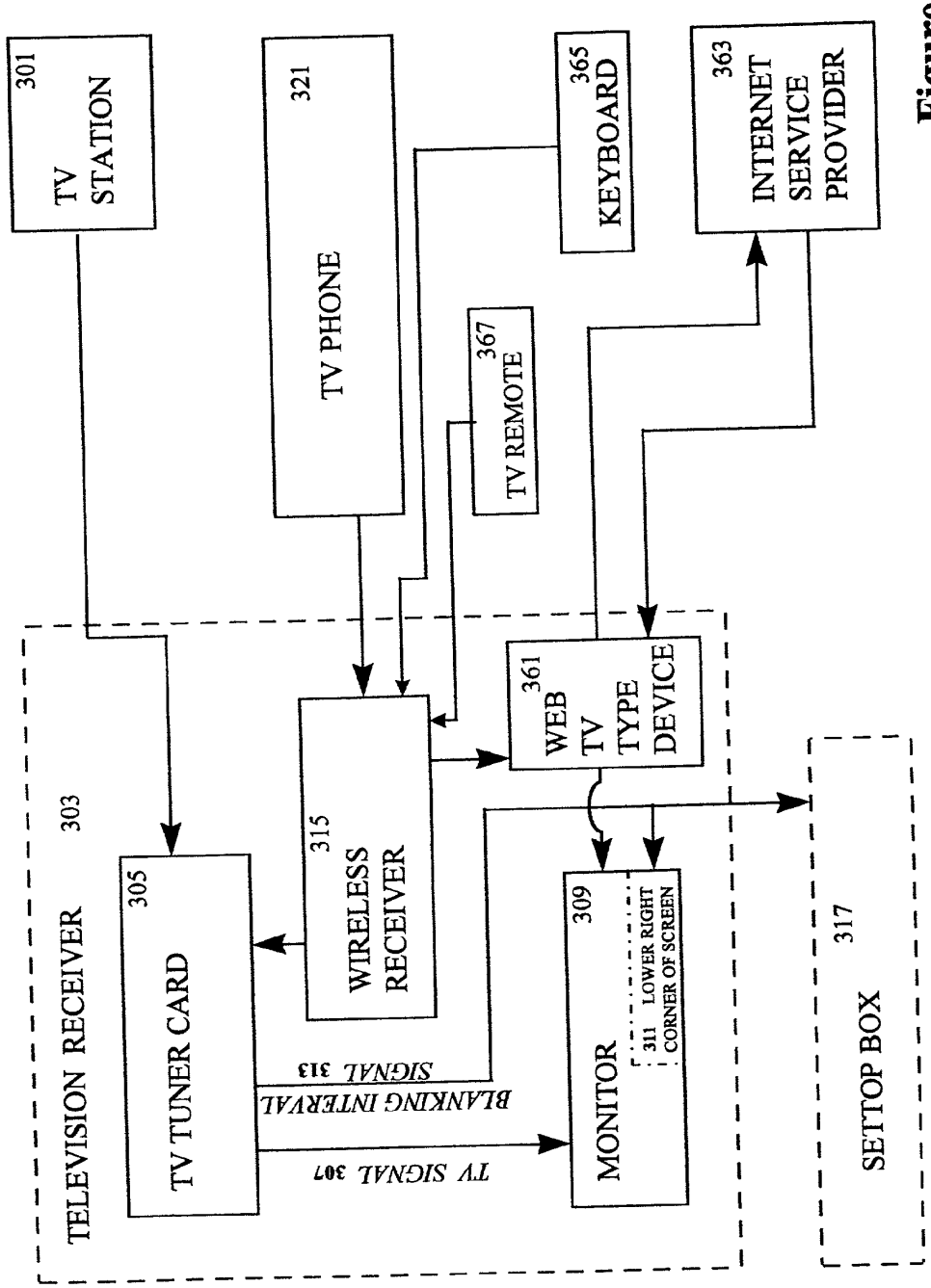
301
TV STATION
321
TV PHONE
365
KEYBOARD
363
INTERNET SERVICE PROVIDER
367
TV REMOTE
TELEVISION RECEIVER
303
305
TV TUNER CARD
315
WIRELESS RECEIVER
361
WEB TV TYPE DEVICE
309
MONITOR
311 LOWER RIGHT CORNER OF SCREEN
317
SETTOP BOX
BLANKING INTERVAL SIGNAL 313
TV SIGNAL 307

Figure 8

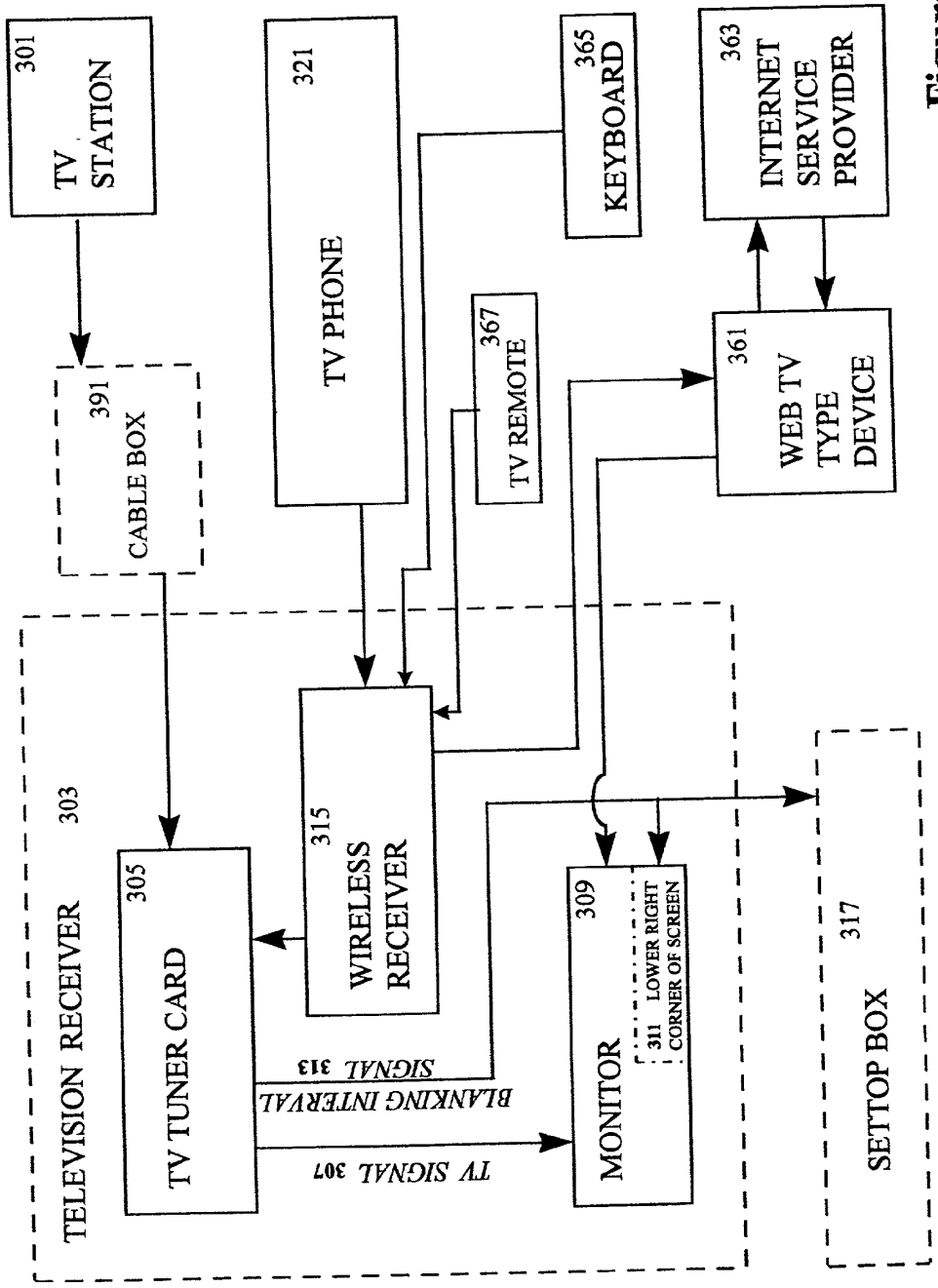
301
TV STATION
391
CABLE BOX
321
TV PHONE
365
KEYBOARD
367
TV REMOTE
363
INTERNET SERVICE PROVIDER
361
WEB TV TYPE DEVICE
TELEVISION RECEIVER
303
305
TV TUNER CARD
315
WIRELESS RECEIVER
BLANKING INTERVAL SIGNAL 313
TV SIGNAL 307
309
MONITOR
311 LOWER RIGHT CORNER OF SCREEN
317
SETTOP BOX

Figure 9

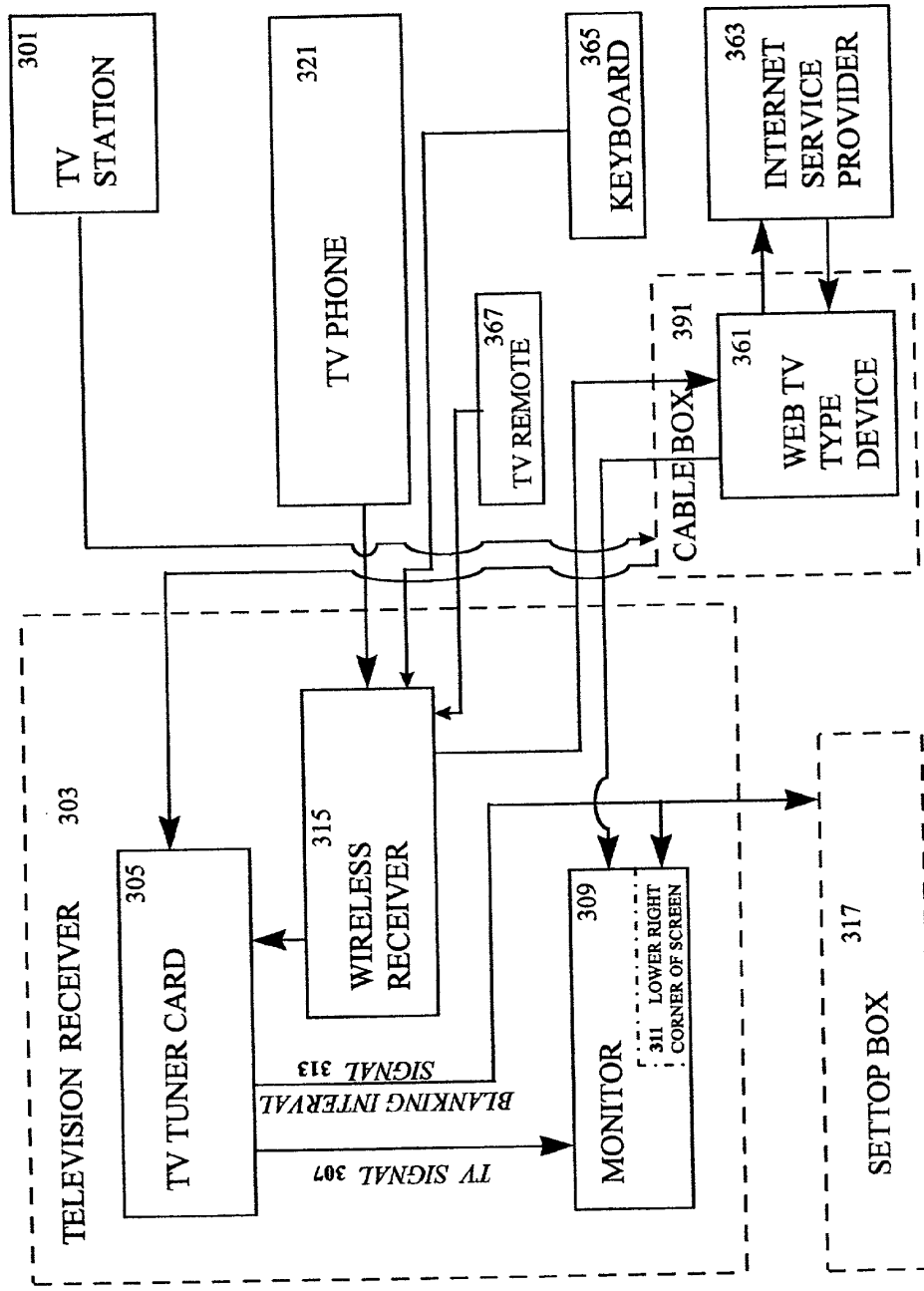
301
TV STATION
321
TV PHONE
365
KEYBOARD
363
INTERNET SERVICE PROVIDER
367
TV REMOTE
391
CABLE BOX
361
WEB TV TYPE DEVICE
TELEVISION RECEIVER
303
305
TV TUNER CARD
315
WIRELESS RECEIVER
309
MONITOR
311 LOWER RIGHT CORNER OF SCREEN
317
SETTOP BOX
BLANKING INTERVAL SIGNAL 313
TV SIGNAL 307

Figure 10

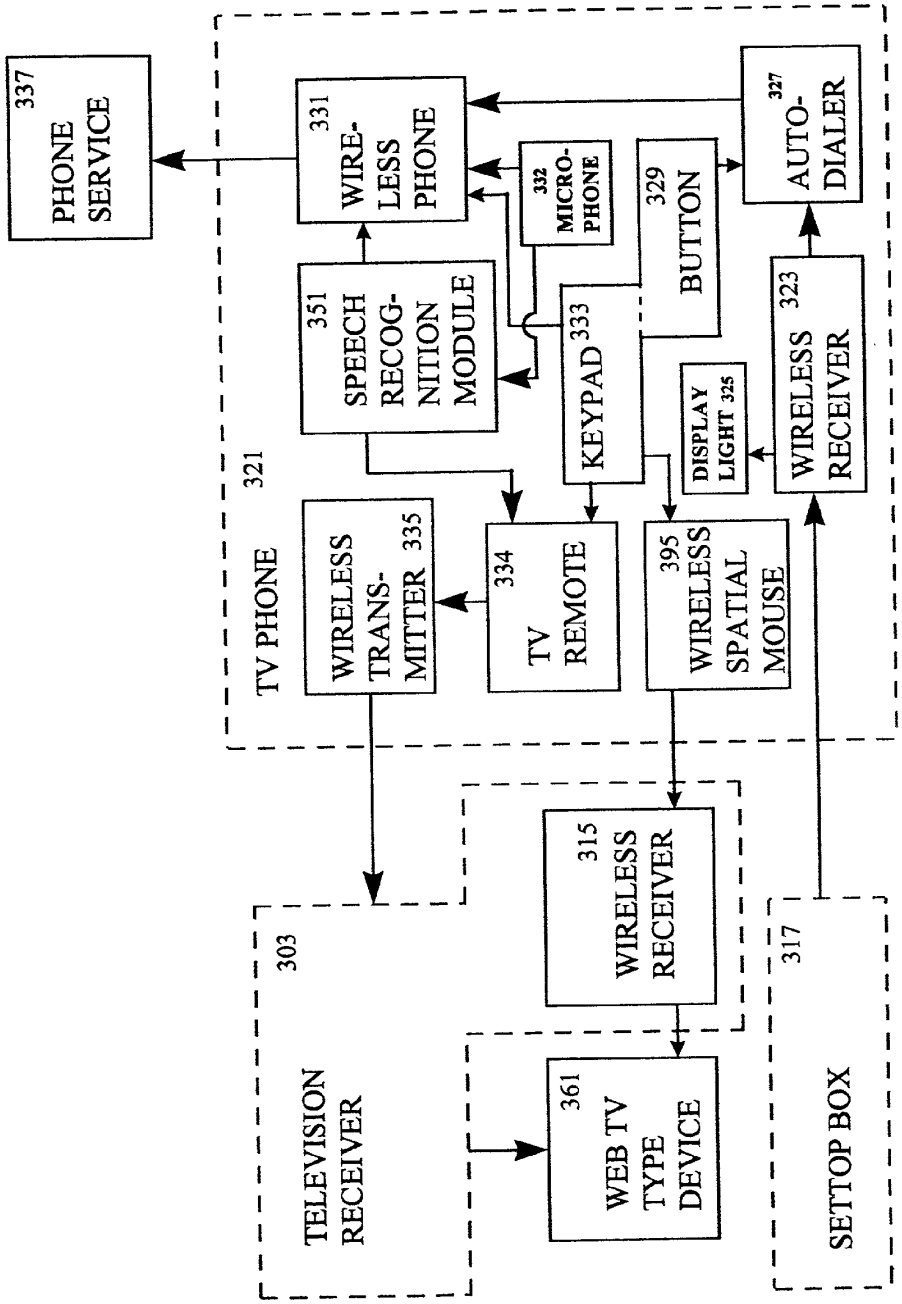
337
PHONE SERVICE
331
WIRE-LESS PHONE
332
MICRO-PHONE
329
BUTTON
327
AUTO-DIALER
351
SPEECH RECOG-NITION MODULE
KEYPAD 333
DISPLAY LIGHT 325
323
WIRELESS RECEIVER
321
TV PHONE
WIRELESS TRANS-MITTER 335
334
TV REMOTE
395
WIRELESS SPATIAL MOUSE
315
WIRELESS RECEIVER
303
TELEVISION RECEIVER
361
WEB TV TYPE DEVICE
317
SETTOP BOX

Figure 11

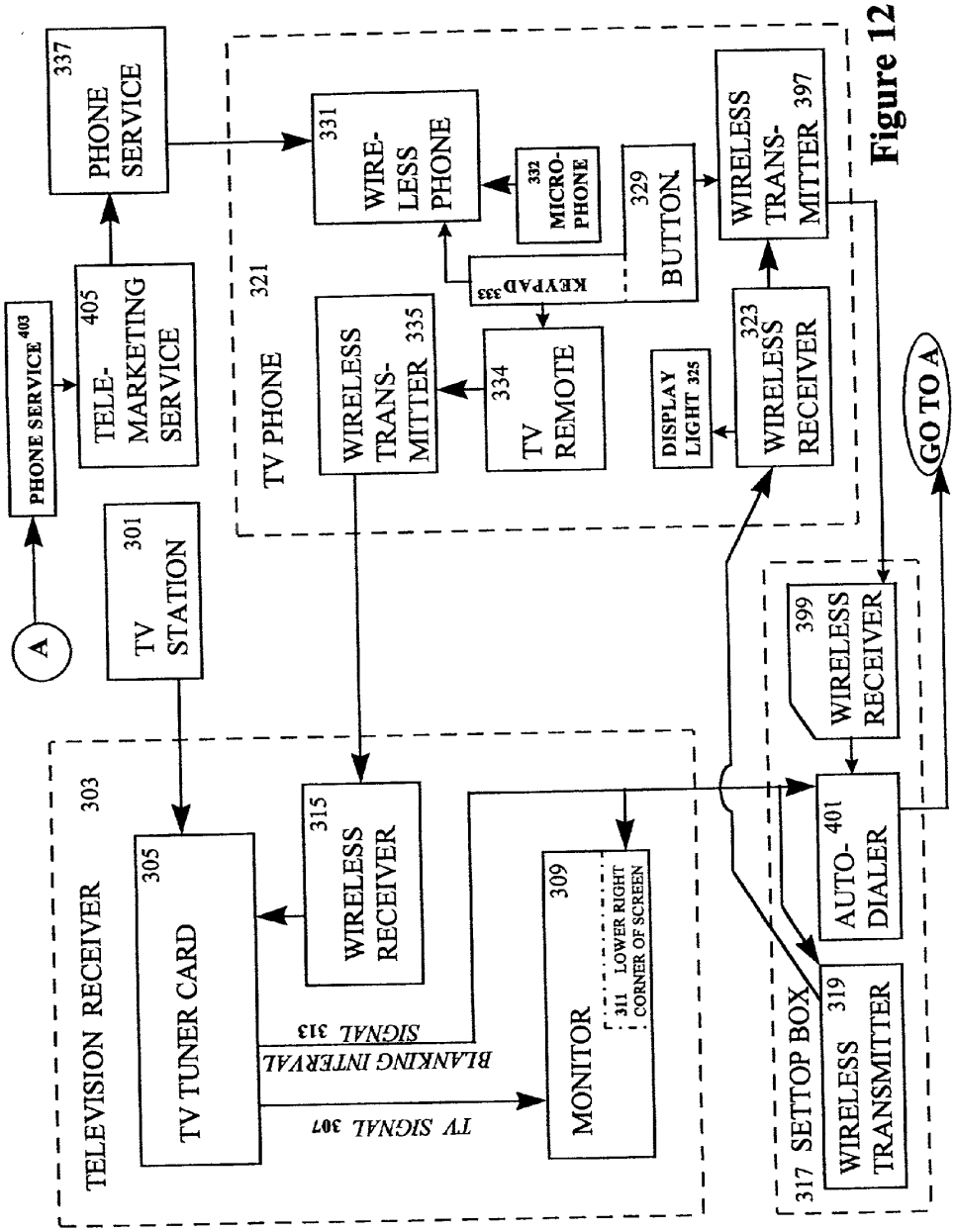
PHONE SERVICE 403
A
TV STATION 301
TELE-MARKETING SERVICE 405
PHONE SERVICE 337
TV PHONE 321
WIRE-LESS PHONE 331
MICRO-PHONE 332
KEYPAD 333
BUTTON 329
WIRELESS TRANS-MITTER 397
WIRELESS TRANS-MITTER 335
TV REMOTE 334
DISPLAY LIGHT 325
WIRELESS RECEIVER 323
GO TO A
WIRELESS RECEIVER 399
TELEVISION RECEIVER 303
TV TUNER CARD 305
WIRELESS RECEIVER 315
MONITOR 309
311 LOWER RIGHT CORNER OF SCREEN
BLANKING INTERVAL SIGNAL 313
TV SIGNAL 307
AUTO-DIALER 401
317 SETTOP BOX
WIRELESS TRANSMITTER 319

Figure 12

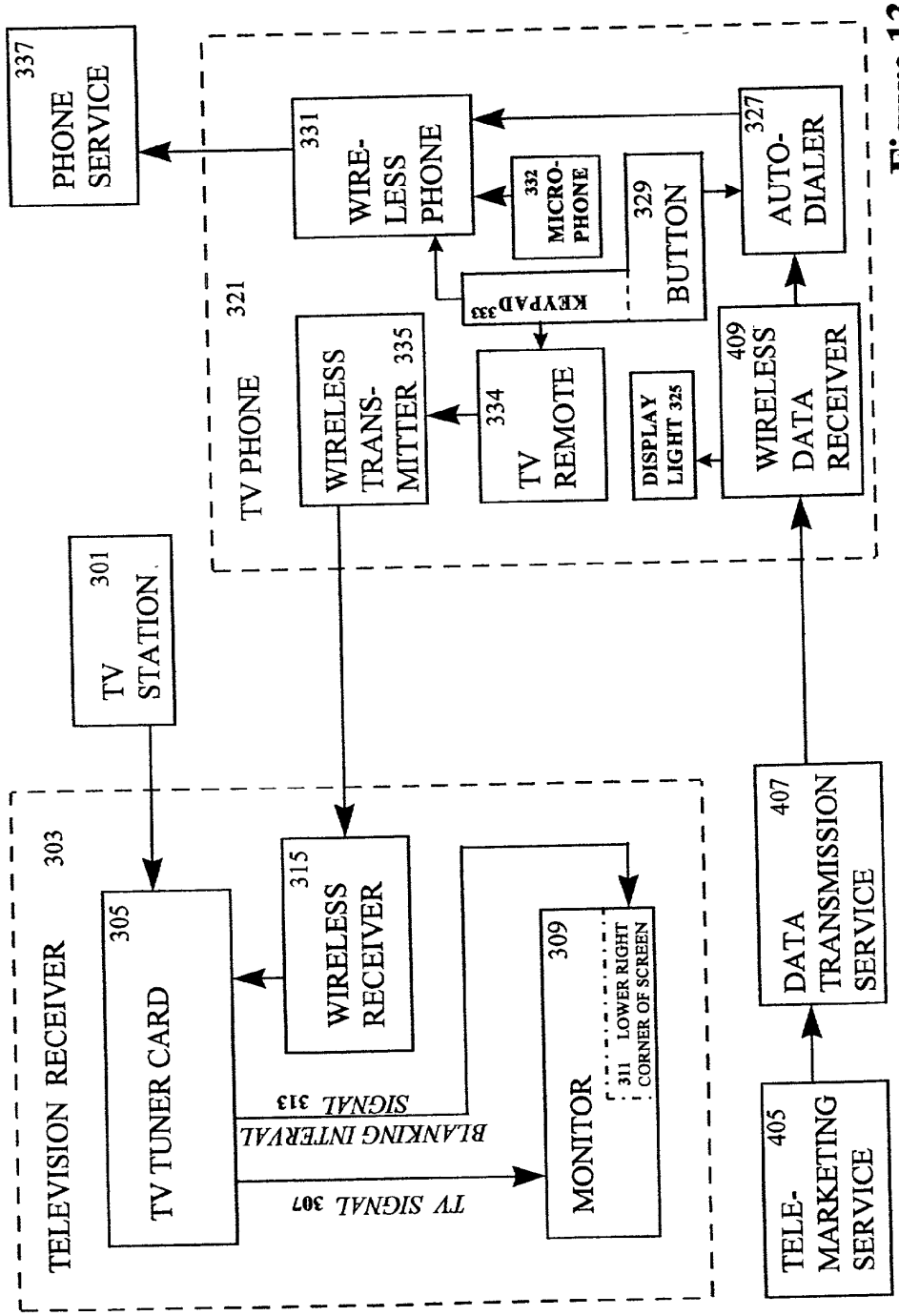
337
PHONE SERVICE
331
WIRE-LESS PHONE
332
MICRO-PHONE
329
BUTTON
327
AUTO-DIALER
KEYPAD 333
321
TV PHONE
WIRELESS TRANS-MITTER 335
334
TV REMOTE
DISPLAY LIGHT 325
409
WIRELESS DATA RECEIVER
301
TV STATION
303
TELEVISION RECEIVER
305
TV TUNER CARD
315
WIRELESS RECEIVER
309
MONITOR
311 LOWER RIGHT CORNER OF SCREEN
SIGNAL 313
BLANKING INTERVAL
TV SIGNAL 307
407
DATA TRANSMISSION SERVICE
405
TELE-MARKETING SERVICE

Figure 13

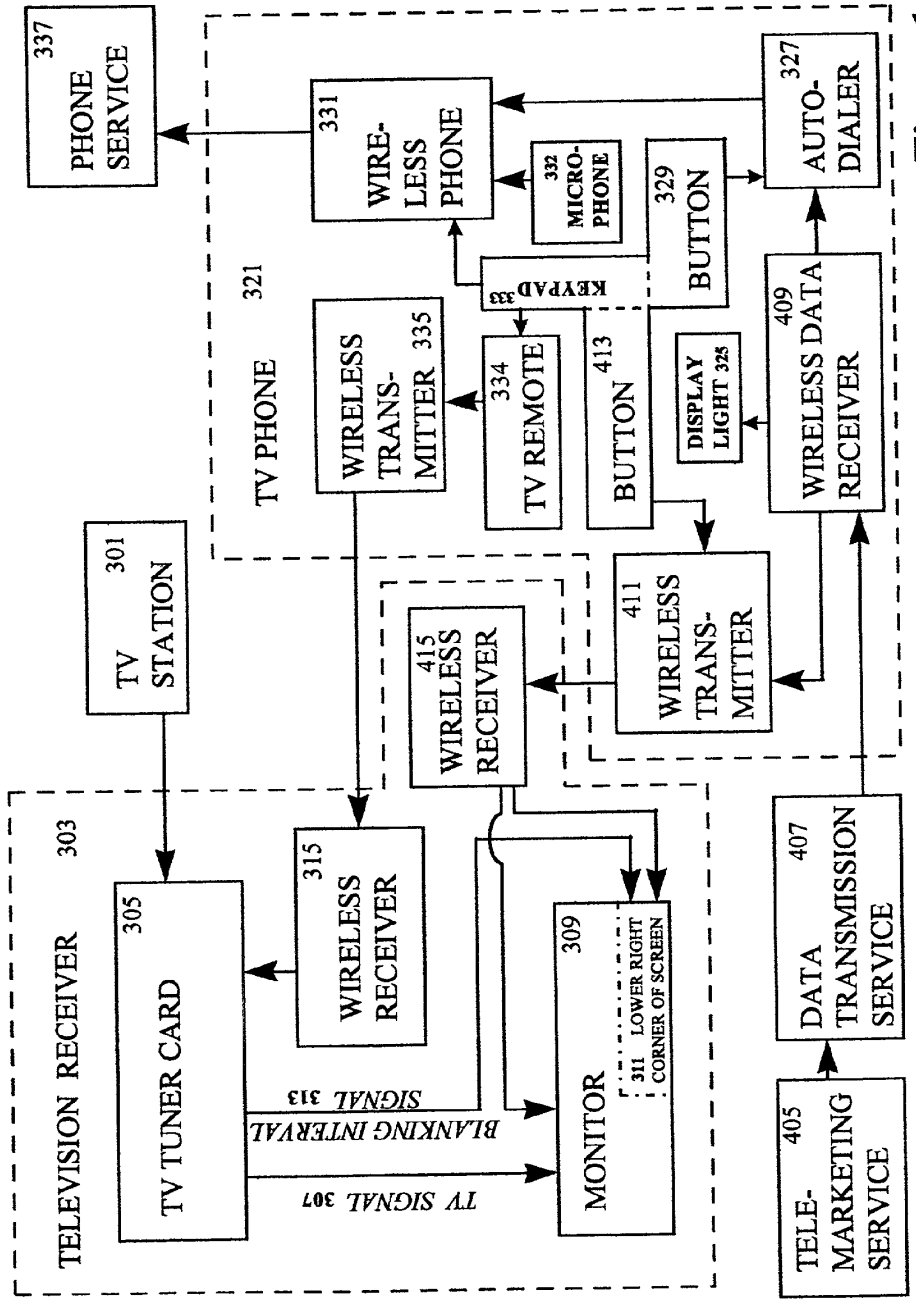
337
PHONE SERVICE
331
WIRE-LESS PHONE
332
MICRO-PHONE
329
BUTTON
327
AUTO-DIALER
321
TV PHONE
KEYPAD 333
WIRELESS TRANS-MITTER 335
334
TV REMOTE
413
BUTTON
DISPLAY LIGHT 325
409
WIRELESS DATA RECEIVER
301
TV STATION
415
WIRELESS RECEIVER
411
WIRELESS TRANS-MITTER
303
TELEVISION RECEIVER
305
TV TUNER CARD
315
WIRELESS RECEIVER
309
MONITOR
311 LOWER RIGHT CORNER OF SCREEN
SIGNAL 313
BLANKING INTERVAL
TV SIGNAL 307
407
DATA TRANSMISSION SERVICE
405
TELE-MARKETING SERVICE

Figure 14

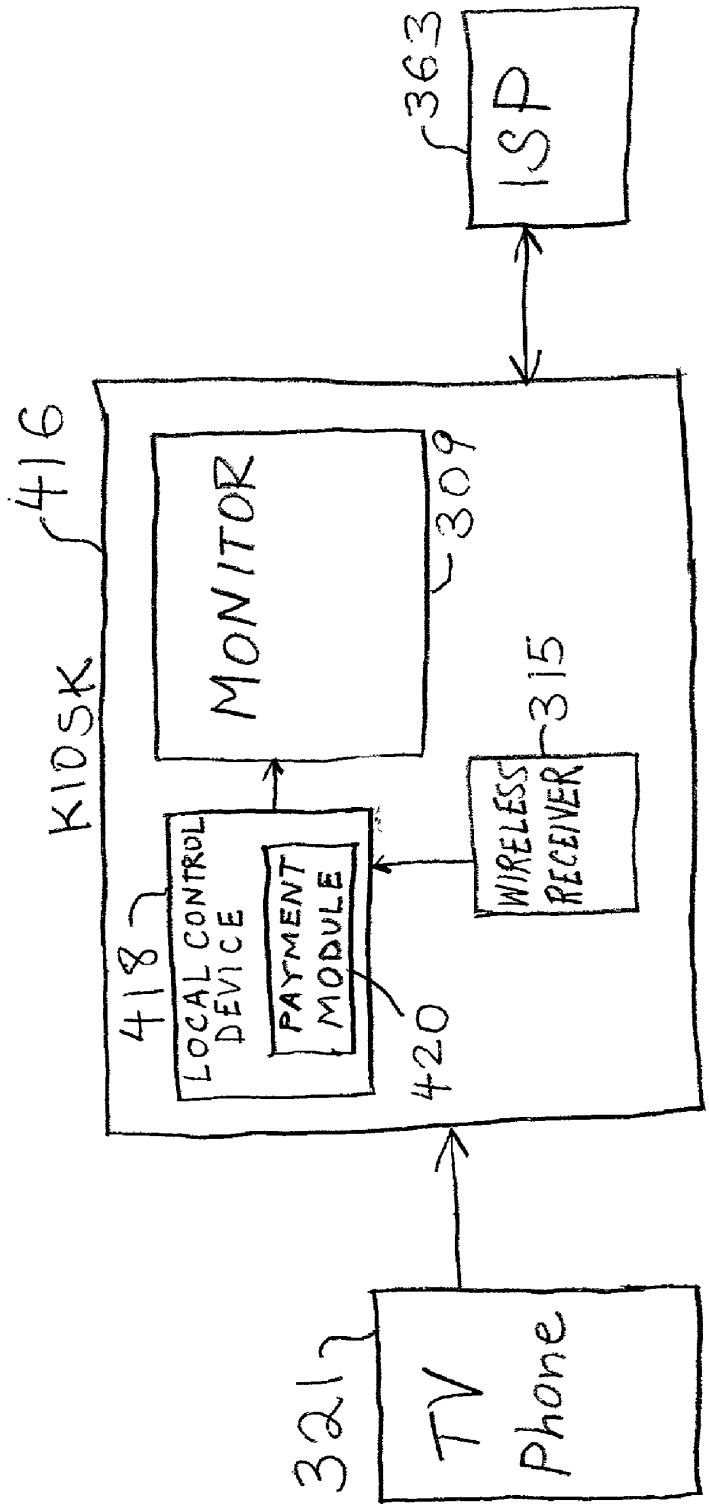
363
ISP
416
KIOSK
MONITOR
309
315
WIRELESS RECEIVER
418
LOCAL CONTROL DEVICE
PAYMENT MODULE
420
321
TV Phone

Figure 15

TELEPHONE DEVICE WITH ENHANCED AUDIO-VISUAL FEATURES FOR INTERACTING WITH NEARBY DISPLAYS AND DISPLAY SCREENS

CROSS-REFERENCE TO RELATED APPLICATIONS

[0001] This application claims the benefit of U.S. Provisional Application No. 60/211,596 filed Jun. 15, 2000, entitled "TELEPHONE WITH ENHANCED AUDIO-VISUAL FEATURES FOR INTERACTING WITH NEARBY DISPLAYS AND DISPLAY SCREENS."

BACKGROUND OF THE INVENTION

[0002] 1. Field of the Present Invention

[0003] An appliance acts as a wireless phone, a TV remote, and an automatic dialer of phone numbers (or web sites) displayed on the TV.

[0004] 2. Background

[0005] Prototypes of "interactive TV" have required that the home users input data solely in the form of finger clicks (either on a device like a TV remote control or on a device like a keyboard). Some of the keyboards are tethered to the TV (or to a set-top box, also referred to below as a "SetTop box"). Others communicate with the TV (or set-top box) in a wireless manner.

[0006] These prototypes have created output solely through the TV (monitor and speakers). Most frequently, the output is merely an increased variety of TV style programming (i.e., more TV channels). More recently, the output has been Internet web style programming (i.e., turning the TV into a web browser and e-mail client), which may include web style interactive activities (e.g., "surfing", "voting", or "purchasing").

[0007] These prototype devices have not had deep market penetration despite heavy marketing efforts. Some analysts have claimed that the supposed interactivity interfered with the desired passive viewing experience of the TV medium. Others acknowledged that today's web style experiences are not as visually rich as the current TV medium.

[0008] However, for decades, much of TV advertising has tried to get TV viewers to pick up a telephone and call a phone number displayed on the TV in order for the viewer to receive more information or purchase something. Many people have a hard time watching two things at once, but experience no difficulty watching one thing while listening to another (e.g., talking on a cell phone while driving). Television shows have successfully had viewers call in. Examples include Muscular Dystrophy fundraisers, talk shows, and shopping channels such as Home Shopping Network. Some of these formats even broadcast incoming phone calls on the air during the shows. This style of interactivity has been successful and an accepted part of the TV experience.

[0009] In addition, recent cellular phones have added a variety of capabilities including Internet access. Some cell phones can be used to pay vending machines (i.e., the user's phone interacts with a soda vending machine so that the soda is paid for by a charge to the user's credit card).

[0010] Currently, some cell phones incorporate other electronic technologies. For example, some cell phones include pager technology which enables these phones to act as one-way or two-way pagers. Other cell phones provide the capabilities of a handheld Personal Digital Assistant ("PDA"). A handheld PDA provides a variety of capabilities which nonetheless fall short of a fully featured computer. PDA capabilities differ from one manufacturer to another, but usually include some of the following: an electronic address book (sometimes with automatic phone dialing), a calendar with scheduling software, a "to do" list, an electronic note pad for text and sketches, a voice recorder, a multi-media playback device for music or video, a digital camera, etc. As an example of the convergence of telephone and PDA capabilities, Qualcomm markets a combination cell phone and PDA which is based upon the best selling Palm Pilot PDA. As another example, HandSpring markets a PDA (the "Visor") that allows a plug-in card to transform the PDA into a cell phone.

[0011] The size of a hand-held telephone, however, limits the size of any viewing screen it incorporates. This has limited the amount and type of data that can be displayed. Pictures, graphics and large amounts of text are difficult to view and read. Such constraints have limited the usefulness of such Internet connections on cell-phones, especially if the screen is smaller than the screen on a PDA. Information that can be relayed by short text, such as e-mail or stock price, drives the current market for such devices and services. But such devices have not been accepted as a general method of "surfing" the Internet.

[0012] Current technology for computer pointer devices no longer requires that a cable connect the pointer device (e.g., a mouse or track ball) to the computer. Instead, current technology enables the pointer device to communicate with the computer in a wireless manner (e.g., by using a Microsoft wireless mouse). Current pointer technology does not require that the pointer device rest on a solid surface. Examples include not only hand held controllers for video games, but also "3 dimensional" mice, which use gyroscopic and other internal devices to sense the extent and direction which a mouse is moved in the air (e.g., Diamond Multimedia GyroMouse).

SUMMARY OF THE INVENTION

[0013] The present invention combines a wireless phone with a TV remote (referred to below as a "TV Phone" or a "telephone device") in the following manner. When an advertisement comes on the TV requesting the viewer to call a phone number, the viewer clicks a button on the TV Phone and the call is automatically placed. The user then talks into the TV Phone for the desired purpose (e.g., getting information, giving an opinion, purchasing a product). Different TV "channels" (whether TV style, or Internet style) can be chosen in two manners: by clicking on a button located on the TV Phone or by talking into a TV Phone equipped with a built in speech-to-text voice recognition system.

[0014] In some embodiments, the TV Phone acts as a "picture phone," transmitting video along with the audio.

[0015] In some embodiments, the phone number or access code is displayed on a real world object other than a TV, such as a billboard, a commercial sign, a printed page (e.g., a magazine), or the like. The real world object includes a

wireless transmitter that transmits the phone number or access code to the TV Phone.

[0016] In some embodiments, the TV Phone allows the user to surf the Internet using his or her TV Phone, and transmit data to a nearby television screen or computer screen to be displayed.

[0017] Instead of having an advertisement (or accompanying an advertisement) appear on the screen, an icon or phone number appears on the screen indicating that a phone call would provide more information about a sports event, news show, product placement, soap opera plot line, etc. Other icons indicate web page information that can be accessed by the device.

[0018] The present invention allows a natural verbal and aural interactivity without breaking up the expected linearity of TV programming. It also allows this interactivity without major telecommunications infrastructure upgrades (e.g., broadband home services through two-way cable systems, fiber optics or DSL systems).

[0019] In the preferred embodiment, in addition to the television, there is a set-top box which has three inputs (a standard phone line, a cable from the television and a wireless receiver) and a TV Phone. The TV Phone is a cordless phone with a base station in the set-top box. The phone line is the input and output for the telephone portion of the TV Phone. The cable from the television is used to send the signal from the TV blanking interval to the set-top box. Similar to closed captioning for the deaf, this signal transmits data to the set-top box. Here, the data is the telephone number that a TV advertisement or announcement asks the viewer to call.

[0020] When the viewer wants to call that number, he or she clicks on a button on the TV Phone. Like other remote controls, this sends a wireless signal to the set-top box. The wireless signal may be an infrared signal, but could be another form of wireless (or even wired) signal. The set-top box is sent the proper phone number via the cable from the TV and the set-top box dials that number.

[0021] In an alternative embodiment, the set-top box does not have a phone line, but uses the capacity of a two way cable system attached to the television.

[0022] In an alternative embodiment, the set-top box does not have a phone line, but is the transmitting and receiving station for a cellular or wireless phone.

[0023] In an alternative embodiment, the set-top box transmits the phone number to the TV Phone, and the TV Phone contains a cell phone or wireless phone which dials the number directly. In this embodiment, the TV Phone need not transmit anything to the set-top box to make the phone call. The set-top box is continuously broadcasting the requisite phone number, and the TV Phone button that is clicked just causes automatic dialing. (However, the TV Phone may have to transmit data to the set-top box if the device includes web surfing options discussed below.)

[0024] In an alternative embodiment, the wireless transmitter is built into the TV and is not a separate set-top box.

[0025] In an alternative embodiment, the TV Phone does not operate as a TV remote control, but can just launch the automatic dialing.

[0026] In an alternative embodiment, the phone number is not transmitted over the blanking interval. Rather, the set-top box transmits which station is being viewed (or the phone number for the station being viewed) and the TV Phone, when activated, dials the station's phone number. The station knows which phone number is being shown on the broadcast (e.g., by having simultaneous input from the station of the number, or by referring to a database with "playlists") and forwards the phone call to that number.

[0027] In an alternative embodiment, the set-top box dials the station number (or sends a signal on a two-way cable) and that call is forwarded to the phone number shown on the TV.

[0028] In an alternative embodiment, the phone call is not forwarded, but is logged, and the calling device hangs up. Then, the phone call is returned (from the appropriate party) to the TV Phone either directly or through the set-top box.

[0029] In some applications, talk over the TV Phone is the only desired communication. In other applications, alphanumeric buttons on the phone can be used (as in phone tree routing) or the other buttons on the TV Phone may signal acceptance, denial or other action.

[0030] In some applications, input from the TV Phone has no effect upon the video and audio displayed on the TV. In other applications, input from the phone may cause a change in the video and audio displayed on the TV, e.g., cause transmission of pay per view movie, cause a signal that enables the set-top box to descramble a pay per view movie or channel (while charging the user's account or credit card), cause the TV to display an Internet web page, etc.

[0031] In some applications, only verbal input from TV Phone completes a purchase or gives out a credit card number. In other applications, these transactions are automated by clicking a button. This automation may occur by pre-installing the credit card number on the TV Phone, or by "escrowing" it with the selling entity (compare to accounts that users can set up at amazon.com). The automated buying may be accomplished by automatically billing the item to the user's phone number, as with 900 numbers.

[0032] In an alternative embodiment, regular cell phones include extra circuitry so that they become TV Phones. When such a TV phone-enabled cell phone is in the presence of a TV Phone set-top box (or a TV with such a set-top box built into it), these cell phones act as a TV Phone and TV remote.

[0033] Many cell phones are now becoming Internet enabled, with tiny screens that transmit modified web pages. In an alternative embodiment, these web-enabled cell phones include extra circuitry so that they become TV Phones ("Web-Cell-TV phone"). When in the presence of a TV Phone set-top box (or a TV with such a set-top box built into it), a simple click on one of the TV Phone buttons places the web page currently displayed on the Web-Cell-TV phone onto the TV screen. (This allows not only larger print but considerably more detail.) The user of the Web-Cell-TV phone navigates on this web page and around Internet (when web pages are displayed on the TV) by using the buttons on the Web-Cell-TV phone Phone. Speech recognition software allows the user to navigate the Internet by talking into the Web-Cell-TV phone. Hereinafter, the term "TV Phone" includes "Web-Cell-TV phone".

[0034] In an alternative embodiment, the TV Phone may include some or all functions of a PDA. In this embodiment, the TV Phone may include such functions as an electronic address book (with or without automatic dialing), an electronic calendar with scheduling capabilities, a "to do" list, an electronic note pad, multi-media playback devices (e.g., for playing audio including voice and music, video, games, IV broadcasts or narrowcasts, radio broadcasts or narrowcasts, including pre-recorded and live, previously downloaded and streaming, however transmitted, e.g., using broadcast spectrum and over the Internet), a voice recorder and playback device, a digital camera (for either still or moving pictures), a pager, etc. In one embodiment, these functions can be displayed only on the TV Phone. In another embodiment, these functions can be displayed only on a TV with the requisite devices for communicating with the TV Phone. In another embodiment, these functions can be displayed both on the TV Phone and on a TV with the requisite devices for communicating with the TV Phone. For the latter embodiments, pressing a button on the TV Phone (or issuing a voice command to it) causes the desired data or pictures to be displayed on a nearby TV screen.

[0035] In an alternative embodiment, the TV Phone contains motion detection devices (such as gyroscopes) so that the TV Phone can operate as a pointing device (e.g., a 3D mouse) with respect to the display on a nearby TV which has the requisite devices for communicating with the TV Phone. In this embodiment, if an Internet web page is displayed on the TV, the TV Phone can be used as a pointing device to navigate the page and click on links. In this embodiment, if a data sheet is displayed on the TV, the TV Phone can be used to navigate it, highlight words, cells, or other data objects for action. In this embodiment, if a picture is displayed on the TV, the TV Phone can click on particular portions of the picture when the portions are linked to hot spots or other triggering devices (similar to hot spots on a web page graphic) which may trigger the placing of a phone call, the retrieval of a web page or other information, the purchase of an item, etc.

[0036] In an alternative embodiment, the TV Phone, instead of interacting as described above with a television set with a set-top box, interacts with a computer that has a TV tuner card or circuit. The computer may, but need not, have an Internet connection.

[0037] In an alternative embodiment, the TV Phone, instead of interacting with a television set with a set-top box, interacts with a computer that has a monitor, but no TV tuner circuit. This computer may, but need not, have an Internet connection.

BRIEF DESCRIPTION OF THE DRAWINGS

[0038] The following detailed description of preferred embodiments of the present invention would be better understood when read in conjunction with the appended drawings. For the purpose of illustrating the present invention, there are shown in the drawings embodiments which are presently preferred. However, the present invention is not limited to the precise arrangements and instrumentalities shown. In the drawings:

[0039] **FIG. 1A** shows a functional flowchart and pictorial representation of one preferred embodiment of the present invention.

[0040] **FIG. 1B** shows a functional flowchart and pictorial representation of another preferred embodiment of the present invention.

[0041] **FIG. 1C** shows an outside view of the hand unit of a TV Phone.

[0042] **FIG. 2** shows an outside view of a television set used with a TV Phone and a TV phone-SetTop Box used in conjunction with the television set and the TV Phone.

[0043] **FIG. 3** shows the data flows associated with a preferred embodiment of the present invention, in which the TV Phone operates as a wireless cellular phone.

[0044] **FIG. 4** shows the data flows associated with an alternate preferred embodiment of the present invention in which the TV Phone operates as a home cordless phone that connects wirelessly to a home base station which is connected by wire to the phone system.

[0045] **FIG. 5** shows the data flows associated with an alternate embodiment of the present invention, in which the TV Phone incorporates a speech recognition module.

[0046] **FIG. 6** shows the data flows associated with an alternate embodiment of the present invention which works in conjunction with a WebTV device.

[0047] **FIG. 7** shows the data flows associated with an alternate embodiment of the present invention in which a WebTV device is incorporated into the TV Phone SetTop Box.

[0048] **FIG. 8** shows the data flows associated with an alternate embodiment of the present invention in which a WebTV device is incorporated into the television receiver.

[0049] **FIG. 9** shows the data flows associated with an alternate embodiment of the present invention in which television signals are received via a cable television network.

[0050] **FIG. 10** shows the data flows associated with an alternate embodiment of the present invention in which a WebTV device is incorporated into the set-top box associated with the cable television network.

[0051] **FIG. 11** shows the data flows associated with an alternate embodiment of the present invention in which the TV Phone contains a wireless spatial mouse that communicates with a WebTV type device.

[0052] **FIG. 12** shows the data flows associated with an alternate embodiment of the present invention in which activation results in a phone call being placed by a telemarketer to the user, rather than the user placing the call.

[0053] **FIG. 13** shows the data flows associated with an alternate embodiment of the present invention in which activation results in a phone call being placed wirelessly from the telemarketer to the TV Phone.

[0054] **FIG. 14** shows the data flows associated with an alternate embodiment of the present invention in which the TV Phone can transmit data to a nearby television for display on the television's monitor.

[0055] **FIG. 15** shows the data flows associated with an alternate embodiment of the present invention in which the TV Phone can transmit data to a nearby kiosk for display on a television monitor of the kiosk.

DETAILED DESCRIPTION OF THE INVENTION

[0056] Certain terminology is used herein for convenience only and is not to be taken as a limitation on the present invention.

Definitions

[0057] The following definitions are provided to promote understanding of the present invention.

[0058] telephone device—A telephone is an instrument that converts voice and other sound signals into a form that can be transmitted to remote locations and that receives and reconverts waves into sound signals. The telephone device described herein performs these conventional functions of a telephone, and also includes enhanced functions which are activated by one or more special or specified buttons. In some embodiments, the telephone device may also transmit images, snapshots, or video. The telephone device is referred throughout the specification as a "TV Phone."

[0059] button—In the present invention, the selection of a special or specified button initiates an enhanced function. As used herein, the phrase, "selection of a button" includes selecting a single button, selecting a plurality of specified buttons that must be pressed in a specific sequence, or the selection of a voice command that is preprogrammed to be equivalent to the selection of a specified button or sequence of buttons.

[0060] electronic address—In the present invention, an electronic address may be an e-mail address, a web site, an ftp site, or equivalents thereof.

[0061] portion of content—In selected embodiments of the present invention, the telephone device includes a display screen that displays content. The content may be a portion of a full content image. As used herein, the "portion of content" may be a truncated or cutoff version of the full content (e.g., cut off at one or more edges), a compressed or low resolution version of the full content, a thumbnail or keyhole of the full content, a text-only version of visual or multi-media content, or the like.

Overview of Present Invention

[0062] The present invention provides many different embodiments of an enhanced telephone device, as discussed below.

[0063] I. Object emits signal containing a telephone number to a telephone device, which, in turn, automatically dials the telephone number.

[0064] A telephone device allows a user to communicate with a remotely located entity. The telephone device includes a button which facilitates communication between the telephone device and the remotely located entity, and a wireless receiver. In the broadest sense, the process operates as follows:

[0065] 1. An object, or a device connected to an object, emits a signal containing a telephone number of the remotely located entity.

[0066] 2. The wireless receiver receives the signal emitted by the object or the device connected to the object.

[0067] 3. The telephone device automatically establishes two-way communication with the remotely located entity upon selection by the user of the button. Selection of the button causes the telephone device to automatically dial the telephone number of the remotely located entity.

[0068] The object may be an outdoor sign or billboard, thereby allowing a user to select one button on the telephone device to become instantly (or almost instantly) connected with the entity associated with the outdoor sign or billboard.

[0069] The object may be a set-top box of a TV system. If so, then the set-top box receives the telephone number from broadcast signals sent over the TV system. The set-top box then emits a signal containing the telephone number of the remotely located entity. In one system configuration, the telephone device is a wireless telephone device having a base station in the set-top box, and the set-top box is hardwired to a telephone outlet. In this configuration, the hardwired telephone outlet in the base station of the set-top box establishes two-way communication with the remotely located entity. In another system configuration, the telephone device is a cellular telephone device, and a cellular telephone network is used to establish two-way communication with the remotely located entity.

[0070] The automatic establishment of two-way communication with the remotely located entity may occur by having the telephone device automatically dial the telephone number of the remotely located entity, and then communicating user identity information to the remotely located entity. The remotely located entity then uses the user identity information to initiate a call to the telephone device. In one preferred embodiment of the present invention, the user identity information is the telephone number of the telephone device. Alternatively, the user identity information may be a customer number or other customer identifying information, and the remotely located entity may use a database or table lookup to locate the telephone number of the user to initiate a call to the user's telephone device.

[0071] The user preferably engages in an audio session with a person or machine at the remotely located entity upon establishing the two-way communication. In other instances, the session may be audiovisual.

[0072] The telephone device preferably includes transceiver circuitry associated with normal telephone communication functions which is separate from the wireless receiver. If so, then the two-way communication uses only the transceiver circuitry.

[0073] The device connected to an object may be a wireless transmitter connected to a television. If so, then the television receives the telephone number from broadcast signals received by the television, and the wireless transmitter connected to the television emits a signal containing the telephone number of the remotely located entity.

[0074] II. Object emits signal containing an electronic address to a telephone device, which, in turn, automatically goes to the electronic address.

[0075] A telephone device allows a user to communicate with a remotely located entity. The telephone device includes a button which facilitates communication between

the telephone device and the remotely located entity, and a wireless receiver. In the broadest sense, the process operates as follows:

[0076] 1. An object, or a device connected to an object, emits a signal containing an electronic address of the remotely located entity.

[0077] 2. The wireless receiver receives the signal emitted by the object or the device connected to the object.

[0078] 3. The telephone device automatically establishing communication with the remotely located entity upon selection by the user of the button. The selection of the button causes the telephone device to automatically contact the electronic address contained within the emitted signal.

[0079] The electronic address may be a web site address of the remotely located entity. If so, then selection of the button causes the telephone device to automatically go to the web site address of the remotely located entity. The telephone device may further include a display screen that displays content. If so, then the web site of the remotely located entity displays content on the display screen retrieved by the telephone device during the communication with the remotely located entity.

[0080] The automatic establishment of two-way communication with the remotely located entity may occur by having the telephone device automatically dial the telephone number of the remotely located entity and communicate user identity information to the remotely located entity. The remotely located entity then uses the user identity information to initiate a call to the telephone device.

[0081] In one preferred embodiment of the present invention, the user identity information is the telephone number of the telephone device. Alternatively, the user identity information may be a customer number or other customer identifying information, and the remotely located entity may use a database or table lookup to locate the telephone number of the user to initiate a call to the user's telephone device.

[0082] The telephone device preferably includes transceiver circuitry associated with normal telephone communication functions which is separate from the wireless receiver. If so, then the two-way communication uses only the transceiver circuitry.

[0083] III. Transmission of content shown on a telephone device display screen to a nearby display screen.

[0084] A telephone device is used to view content on a nearby display screen which is not physically connected to the telephone device. The telephone device includes a display screen which displays content, a button which facilitates communication of content between the telephone device and a local control device connected to the nearby display screen, and a wireless transmitter. In the broadest sense, the process operates as follows:

[0085] 1. Content is stored in the telephone device.

[0086] 2. The content is displayed on the display screen of the telephone device.

[0087] 3. The content is communicated from the telephone device to the local control device via a signal sent by the wireless transmitter upon selection of the button.

[0088] 4. The local control device receives the signal and provides the content to the nearby display screen for display thereon.

[0089] The local control device may require the use of a decoder to convert the signal received from the telephone device into a format for viewing by the nearby display screen.

[0090] The content shown on the telephone device display screen may be a portion of a full content image. If so, then the full content image is provided to the local control device for display on the nearby display screen.

[0091] IV. Transmission of electronic address of content shown on a telephone device display screen to a nearby display screen (scheme 1)

[0092] A telephone device is used to view content on a nearby display screen which is not physically connected to the telephone device. The telephone device includes a display screen which displays content, or a portion thereof, a button which facilitates communication of content between the telephone device and a local control device connected to the nearby display screen, and a wireless transmitter. In the broadest sense, the process operates as follows:

[0093] 1. Content, or a portion thereof, and an electronic address of the content are stored in the telephone device.

[0094] 2. The content, or a portion thereof, is displayed on the display screen of the telephone device.

[0095] 3. The electronic address of the content is communicated from the telephone device to the local control device via a signal sent by the wireless transmitter upon selection of the button.

[0096] 4. The local control device receives the signal and transmits a request over an electronic network to retrieve the content from a remote location.

[0097] 5. Upon receiving the content, the local control device provides the content to the nearby display screen for display thereon.

[0098] The content shown on the telephone device display screen may be a portion of a full content image. If so, then the full content image is provided to the local control device for display on the nearby display screen.

[0099] In one preferred embodiment of the present invention, the electronic address is a web site address, the remote location is a web site, and the electronic network is the Internet.

[0100] In another preferred embodiment, the content, or a portion thereof, that is stored in the telephone device is retrieved from a remote source.

[0101] In yet another preferred embodiment, the local control device further comprises a payment module which tracks usage charges for providing content to the nearby display screen. In this scheme, the telephone device communicates customer identity information, such as the telephone number of the telephone device, to the payment module. The payment module inhibits the completion of the process unless the payment module properly authorizes the telephone device to use the display screen for viewing content. In this embodiment, the local control device may be part of a kiosk having a large screen display for viewing content.

[0102] V. Transmission of electronic address of content shown on a telephone device display screen to a nearby display screen (scheme 2).

[0103] A telephone device is used to view content on a nearby display screen which is not physically connected to the telephone device. The telephone device includes a display screen which displays an electronic address of content, a button which facilitates communication of the electronic address between the telephone device and a local control device connected to the nearby display screen, and a wireless transmitter. In the broadest sense, the process operates as follows:

[0104] 1. The telephone device retrieves an electronic address of content from a remote source, and stores the electronic address in the telephone device.

[0105] 2. The electronic address is displayed on the display screen of the telephone device. (In this scheme, content, or a portion thereof, associated with the electronic address is not necessarily displayed on the display screen of the telephone device.)

[0106] 3. The electronic address is communicated from the telephone device to the local control device via a signal sent by the wireless transmitter upon selection of the button.

[0107] 4. The local control device receives the signal and transmits a request over an electronic network to retrieve content at the electronic address from a remote location.

[0108] 5. Upon receiving the content, the local control device provides the content to the nearby display screen for display thereon.

[0109] Scheme 2 may have a similar payment module and kiosk layout as the scheme 1. Scheme 2 may also use a web site address as the electronic address.

[0110] VI. A telephone number is shown on display screen, and a wireless telephone device automatically dials the telephone number.

[0111] A wireless telephone device and a set-top box of a TV system allow a user to communicate with a remotely located entity. The wireless telephone device includes a button which facilitates communication between the telephone and the remotely located entity. The set-top box includes a base station of the wireless telephone device. The set-top box is in communication with a telephone system and is also connected to a television. In the broadest sense, the process operates as follows:

[0112] 1. The set-top box stores a telephone number and causes telephone number information to be displayed on the television.

[0113] 2. Upon selection by the user of the button, the telephone device sends a signal to the set-top box to dial the telephone number, thereby establishing two-way communication between the telephone device and the remotely located entity via base station and the telephone system.

[0114] The user may engage in an audio session with a person or machine at the remotely located entity upon establishing the two-way communication.

[0115] In one preferred embodiment, the set-top box prestores a listing of telephone numbers corresponding to specified television stations, and the dialed telephone number is the prestored telephone number of the currently active television channel. The television station may automatically forward any received telephone calls to a telephone number of the remotely located entity.

[0116] The establishment of two-way communication with the remotely located entity may occur by the telephone device sending a signal to the set-top box to dial the telephone number of the remotely located entity and communicating user identity information to the remotely located entity, and the remotely located entity using the user identity information to initiate a call to the telephone device. The user identity information may be the telephone number of the telephone device.

[0117] The telephone system is preferably external to the TV system, but may alternatively be internal to the TV system. In either embodiment, the telephone system preferably uses the TV system for establishing and maintaining the two-way communication.

[0118] The telephone number information may be a telephone number stored at the set-top box. Alternatively, the telephone number information may be a telephone icon which indicates that the telephone number stored at the set-top box will be dialed upon selection of the button. In yet another alternative scheme, the telephone number information is the telephone number stored at the set-top box and a telephone icon which indicates that the telephone number stored at the set-top box will be dialed upon selection of the button.

[0119] The set-top box may receive the telephone number stored therein from broadcast signals sent by the TV system.

Detailed Description

[0120] **FIG. 1**A and **FIG. 1B** provide self-explanatory summary overviews of two embodiments of the present invention, both of which are described in more detail below with respect to the remaining figures. Thus, no detailed descriptions are provided herein of these figures.

[0121] Referring to **FIG. 1**B, in an alternative embodiment of the present invention, the TV phone acts as an input device (e.g., a mouse, pointing device, keyboard) to a WebTV-type device connected to the display screen.

[0122] **FIG. 1C** shows the hand unit of a TV Phone **101**. Some of its features are similar to those of a standard wireless telephone such as a microphone **117**, a speaker **109**, an alphanumeric keypad **119**, a control keypad with SEND and RECEIVE keys **121**, a power on and off switch **107**, an antenna **105**, an LCD panel **111**. Special features of the TV Phone are an antenna **103** for communicating with the TV or set-top box and a special TV Phone button **113**. In an alternate embodiment, both antennae are combined into one. In another alternate embodiment, the special TV Phone button is replaced by requiring the user to click on two standard buttons at the same time or clicking on a sequence of standard buttons. Also shown is a special TV Internet button **115** which allows the TV Phone to operate an Internet appliance which may be stand-alone, operating as a set-top box to the television, or integrated into the TV Phone set-top box. In an alternate embodiment, this button **115** is eliminated or its function is replaced by some other standard button or combination of buttons. In alternate embodiments, the special buttons **113** and **115** are replaced by speech recognition software embedded in the TV Phone **101**. In

alternate embodiments, some of these features may be eliminated, or their location moved or their size altered.

[0123] **FIG. 2** shows a standard television **213**, a TV Phone set-top box **201**, and a cable **211** for connecting them.

[0124] The standard television **213** in **FIG. 2**, includes a screen **221** for viewing, a speaker for listening **227**, a jack for an earphone **225**, a power on and off switch **233**, buttons for changing channels **229**, buttons **231** for increasing and decreasing volume of sound coming from the speaker **227** or earphone jack **225**, a hand-held remote control **239**, and a wireless antenna **223** for receiving input from the remote control **239**. The standard television **213** also includes a recessed panel **219**, behind which is a set of controls for fine tuning channels, adjusting color, fixing horizontal and vertical stability, etc. (These controls are not shown.) The standard television **213** also includes input jacks **237**, output jacks **235**, a VHF antenna **215**, a UHF antenna **217**, other jacks **241** such as for connecting to a cable television service, and a power cord with plug **239**. In an alternative embodiment, the power cord is replaced by a battery pack (not shown). Alternate embodiments include other optional features typical of television sets (not shown) such as, but not limited to, special connections for cable, video, audio, VCR, Internet, WebTV®, CD, DVD or TiV® devices. Alternate embodiments include these optional features in the television set itself (not shown) along with control pads for them (not shown).

[0125] The TV Phone set-top box **201** shown in **FIG. 2**, includes input jacks **207**, output jacks **205**, a power cord with plug **209** and a wireless antenna for transmitting data to and receiving data from the TV Phone **101**.

[0126] The connection cord **211** connects from an output jack **235** of the television **213** to the input jack **207** of the TV Phone set-top box **201** as well as connecting the output jack **207** of the TV Phone set-top box **201** to the input jack **237** of the television **213**.

[0127] The TV Phone set-top box may sit on top of the television, or next to it or somewhere close. In an alternate embodiment, the TV Phone set-top box **201** is built into the television set **213**. In an alternate embodiment, the TV Phone set-top box is built into another appliance connected to the television, such as, but not limited to, a cable television set-top box, a satellite TV set-top box, a VCR, a CD player, DVD player, a gaming console like the Sony Playstation, a TiVo player (or Replay player) that allows delayed viewing of television shows by incorporating digital storage such as a hard disc, a Web TV set-top box, or other Internet appliance.

[0128] **FIG. 3** shows a diagrammatic view of the present invention. Under normal operation of the television set **213**, designated also as the television receiver **303** in **FIG. 3, a** television signal is transmitted from a television station **301** to the television set **213** either wirelessly, through the air or through a conduit such as a television cable, or fiber optic line, or some combination. The television set picks up the signal through antenna **215** and **217** or an input jack **241**. Within the television receiver **303**, the signal is routed to a TV tuner card **305** which processes the signal. The images in the TV signal **307** are sent to the monitor **309** (also designated in **FIG. 2** as the screen **221**) and the sound sent to the speaker **227** and earphone jack **225** (shown in **FIG. 2** but not in **FIG. 3**). (Some units have more than one speaker, or have stereo speakers.) Signals that come over the blanking interval, such as closed captioning for the hearing impaired, are displayed on a portion of the monitor such as the lower right comer of the screen **311**. (In other embodiments, these signals may be displayed on other or different portions of the screen.) The blanking interval currently accommodates various signals besides closed captioning. In this embodiment, the blanking interval includes a telephone number that can be called for certain information, such as with advertisements. This number is displayed **309** and the number is also sent to the SetTop Box **317**. An icon is displayed alongside the telephone number on the lower right comer of the screen **309** which indicates that it is accessible via the TV Phone. In some embodiments, the icon is displayed without the telephone number, in other embodiments, the telephone number is displayed without the icon. In other embodiments, the location on the screen for display of phone numbers or icons differs.

[0129] When the telephone number (actually, data which contains the telephone number) is sent to the SetTop Box **317**, it is transferred to a wireless transmitter **319** in the SetTop Box **317**. In a preferred embodiment, the wireless transmitter **319** uses parts of the infrared electromagnetic spectrum. In other preferred embodiments, the wireless transmitter uses other portions of the electromagnetic spectrum, such as those used by the BlueTooth® wireless protocol. The wireless transmitter transmits the data containing telephone number. The data is received by the wireless receiver **323** in any nearby TV Phone **321**. When such a signal is received, the TV phone **321** loads the number into an auto-dialer **327** and activates a display light **325**. (In an alternate embodiment, the TV Phone **321** beeps or emits an audible sound, when the signal is received.) When the user presses a specific button **329** on the TV phone keypad **333**, the autodialer **327** will be activated. This causes the wireless phone **331** portion of the TV phone **321** to access the wireless phone service **337** (e.g., a cell phone network) by dialing the number that had been received from the TV Station **301** over the blanking interval signal and passed from the Television Receiver **303** through the SetTop Box **317** to the TV phone **321**. If the number is not busy, the user may talk through the microphone **323** of the TV Phone **321** to parties at the other end, or may enter data using the keypad **333**.

[0130] The TV phone **321** also can be used as a remote control for the Television Receiver **303**. When used as a remote control, the keypad **333** of the TV Phone **321** activates the circuitry of encoding and circuitry associated with a TV remote control device **334** which is built into the TV Phone **321**. The TV remote control circuitry **334** transfers its data to a wireless transmitter **335** which sends that data to a wireless receiver **315** in the Television Receiver **303**. The wireless transmitter **335** in the TV Phone **321** uses a different portion of the electromagnetic spectrum as the wireless transmitter **319** in the SetTop Box **317**. (An alternate embodiment of the present invention uses the same portion of the spectrum or the same protocol for communication over such spectrum.) The wireless receiver **315** receives data for changing a channel, increasing or decreasing volume of audio, powering the system on or off, or the like, in the same manner it receives data from a standard TV remote control device, and then forwards the commands to the TV tuner card **305**, which executes the desired operation.

[0131] In **FIG. 4**, the TV Phone only transmits phone signals for a short distance, such as in a home cordless phone system. The TV Phone does not transmit the signal directly to the phone service **337**, but rather transmits the phone signal to a wireless receiver **341** built into the SetTop Box **317**. This SetTop Box **317** operates like the base station of a home cordless telephone. The SetTop Box **317** is connected to the phone service **337** and the wireless receiver **341** transfers the telephone signal from the TV Phone **321** to the phone service **337**. Other elements of the system, such as the television receiver **303** and the wireless transmitter **319** in the SetTop Box **317**, are the same as in **FIG. 3**.

[0132] In **FIG. 5**, the TV Phone incorporates a speech recognition module **351** as an input device in addition to a keypad **333**. In this embodiment, commands and data entries can be accomplished by speaking into the microphone **332**. The speech recognition module **351** translates the spoken words into data commands that are recognized by the wireless phone **331** or the TV remote control module **334** as appropriate. For example, the command "SEND" is a command for the wireless phone, whereas the command "SWITCH TO CHANNEL 5" is a command for the TV remote module. Other elements of the system are the same as shown in **FIG. 3**.

[0133] **FIG. 6** shows the same configuration of TV Phone as in **FIG. 3**, except that the user has hooked up a typical WebTV type device **361** to the television. The wireless receiver **315** is connected to the WebTV type device **361**, which is connected to the monitor **309** and an Internet Service Provider **363**. The connection to the Internet Service Provider can be via dial-up modem through the telephone system, via cable modem through a cable TV network, via a wireless cable network, via a satellite dish, or any combination thereof. A wireless keyboard **365** is also part of the system. (In alternate embodiments, the keyboard is tethered to either the TV or the WebTV type device.) When the WebTV device **361** receives data from the Internet Service Provider **363**, the data is displayed on the TV monitor **309**. The user can input information to the WebTV device (e.g., by clicking on hyperlinks or by typing e-mail) using the keyboard **365** or the TV remote **367**. In an alternate embodiment, the wireless receiver for the WebTV is distinct from the wireless receiver for the TV receiver's remote control. In an alternate embodiment, the wireless receiver for the WebTV **315** is physically located in the housing of the WebTV device **361**.

[0134] Input to the remote control module in the TV Phone **321** (not shown in **FIG. 6**, but shown as **334** in **FIG. 3**) and the keypad in the TV Phone **321** (not shown in **FIG. 6**, but shown as **333** in **FIG. 3**) control the WebTV device in the same way as the TV remote **367** (also shown as **239** in **FIG. 2**) and keyboard **365**.

[0135] Other elements of the system shown in **FIG. 6** are the same as shown in **FIG. 3**.

[0136] **FIG. 7**, shows an alternative embodiment in which the WebTV type device **361** is located in the housing of the TV Phone SetTop Box **317**. The data flows are the same as in **FIG. 6**, except the physical location of the WebTV type device has moved. Other elements of the system shown in **FIG. 7** are the same as shown in **FIGS. 6 and 3**.

[0137] **FIG. 8**, shows an alternative embodiment in which the WebTV type device **361** is located in the housing of the TV Receiver **303**. The data flows are the same as in **FIG. 6**, except the physical location of the WebTV type device has moved. Other elements of the system shown in **FIG. 8** are the same as shown in **FIGS. 6 and 3**.

[0138] **FIG. 9**, shows an alternative embodiment in which the television receiver **303** is connected to a cable television network via a cable TV box **391**. The television tuner card **305** receives broadcasts from the TV station **301** through the cable network and the cable TV box **391**, rather than through an antenna **215** or **217**. In all other respects, elements of the system shown in **FIG. 9** are the same as shown in **FIGS. 6 and 3**.

[0139] **FIG. 10**, shows an alternative embodiment in which the WebTV type device **361** is located in the housing of the cable TV box **361**. The data flows are the same as in **FIG. 9** and **6**, except the physical location of the WebTV type device has moved. Other elements of the system shown in **FIG. 10** are the same as shown in **FIGS. 9, 6** and **3**.

[0140] **FIG. 11** shows an alternate embodiment of the present invention in which the TV Phone contains a wireless spatial mouse **395** that operates with a WebTV type device **361**. The WebTV device **361** may be located in the television receiver housing **303**, in the TV Phone SetTop Box housing **317**, in another housing such as a cable TV set-top box **391**, or by itself as in **FIG. 6**. As the user moves the TV Phone in space, the gyroscopic sensors in the wireless spatial mouse **395** sense the change in position and send that change wirelessly to the wireless receiver **315**. The wireless receiver transfers the data on the change in position to the WebTV type device **361** which causes a cursor to move on the monitor (**309** in **FIG. 6**). The user can "select" items on the screen, i.e., perform "mouse clicks", by clicking one or more of the keys on the TV Phone keypad **333**. The click is transmitted though the wireless spatial mouse **395** to the wireless receiver **315** and thence to the WebTV type device **361**, which records and reacts to the mouse click. Other elements of the system shown in **FIG. 11** are the same as shown in **FIGS. 6 and 3**.

[0141] **FIG. 12** shows an alternate embodiment of the present invention. Data flows from the TV Station **301** to the Television Receiver **303** and then to the TV Phone SetTop Box **317**, in the same manner as in **FIG. 3**. However, the set-top box does not send the phone number to the TV Phone, but sends the number to an autodialer **401** in the SetTop Box **317**. The SetTop Box **317** sends a signal via the wireless transmitter **319** to the TV Phone **321** that a phone number is available to access. The signal is received by a wireless receiver **323** and a display light **325** lights up. If the user wants to access the phone number, the user presses the special button **329** on the TV Phone. When the special button is pressed, a wireless transmitter **397** sends a signal to a wireless receiver **399** in the SetTop Box **317**. The autodialer **401** in the SetTop Box **317** makes a phone or data call through the phone service **403** to the phone number representing a telemarketing service. The phone or data call gives the telephone number by which the TV Phone can be called by third parties. Then the telemarketing service **405** makes a phone call through the phone service **337** to the wireless phone component **331** of the TV Phone.

[0142] The key difference between **FIG. 12** and **FIG. 3** is whether the user of the TV Phone makes the wireless call, or merely receives the wireless call. In some regions or

countries, wireless calls are charged only to the person who dials the call, whereas in other regions or countries, wireless calls are charged only to the person who receives the call. In other places, both caller and receiver are charged. The commercial viability of the present invention may depend on who is charged for the call. The different embodiments provide for the different way wireless phone charges are billed.

[0143] Other elements of the system shown in **FIG. 12** are the same as shown in **FIG. 3**.

[0144] **FIG. 13** shows an alternate embodiment of the present invention, in which the phone number is not transmitted from the television receiver **303** to the TV Phone **321**. Rather, the phone numbers are transferred from the telemarketing service **405** to a data transmission service **407** which transmits the data to a wireless data receiver **409** in the TV Phone **321**. The user must use the keypad **333** to set which television channel (or network) he or she is watching. Then, when there is a number to be dialed on that channel, the wireless data receiver **409** lights up the display light **325** and transfers the telephone number to the auto dialer **327**. A particular television network (or channel number) may be airing different advertisements and advertised phone numbers in different localities and time zones. However, the triangulation feature of cell phones that is required by government agencies, such as the FCC to enable emergency units to locate a cell phone caller, can be used to distinguish locations and time zones.

[0145] In any event, as in **FIG. 3**, pressing the special button **329** causes the autodialer **327** to make the phone call. The TV Phone operates as a TV remote control **334** and **335** as in **FIG. 3**, but changing the channels via the built in TV remote **334** tells the wireless data receiver **409** which network or local channel is active, and which phone numbers to use.

[0146] Other elements of the system shown in **FIG. 13** are the same as shown in corresponding numbered items in **FIG. 3**.

[0147] **FIG. 14** shows an alternate embodiment of the present invention, in which the phone number is not transmitted from the television receiver **303** to the TV Phone **321**. Rather, as in **FIG. 13**, the phone numbers are transferred from a data transmission service **407** to a wireless data receiver **409** in the TV Phone **321**. In addition, in the embodiment shown in **FIG. 14**, the TV Phone receives other data from the data transmission service, such as e-mail, Internet access, and the like. The data may be delivered using the WAP protocol or other protocol. The data may be displayed on a small LCD screen **111** on the TV Phone (shown in **FIG. 1C** but not shown in the data flows of **FIG. 14**) or delivered to the user via voice or audio interface using a speaker **109** (shown in **FIG. 1C** but not shown in **FIG. 14**). Because of the small size of the screens in cell phones, more data can be transmitted to the cell phone than can be usefully displayed. For some applications, only portions of the data are displayed. For some applications, only text is displayed and accompanying pictures are not. In current Internet-enabled cell phones, the "excess" information that cannot be usefully displayed is not transmitted by the data service to the cell phone. The TV Phone **321** receives this additional information and transfers it to a special wireless transmitter **411**. When the user presses a special button **413** (or predefined combination of other buttons), the data is sent to a wireless receiver **415** in the television set. The data is processed by electronics associated with this wireless receiver (not shown separately) and then displayed on the television monitor **309**. If the data includes a phone number accessible by the TV Phone **321**, this number is displayed in the lower right corner of the screen **311**, whereas the wireless data receiver **409** in the TV Phone **321** places the number in autodialer **327**.

[0148] This embodiment does not require the television to have a direct Internet connections, but enables a user to have a television monitor (or similarly equipped computer monitor) display information received by the TV Phone **321**, but display that information on a much larger screen than is possible on a cell phone.

[0149] This transmitter **411** may be combined with other wireless transmitters used by the TV Phone **321** such as **335**, or may operate on different frequencies or protocols. For example, the wireless transmitter **335** that permits the TV Phone **321** to operate as a television remote control may operate on an infrared protocol, whereas the wireless transmitter **411** may operate using the BlueTooth protocol designed to allow wireless communications among household devices. This description is not intended to limit the included protocols and frequencies, and the scope of the present invention is intended to include other acceptable protocols for the various functions of the TV Phone **321** which are known to those skilled in the art.

[0150] Other elements of the system shown in **FIG. 14** are the same as shown in corresponding numbered items in **FIG. 13**.

[0151] As in previous figures, an alternative embodiment includes voice recognition software (not shown in **FIG. 14**), so that transmitting the data from the TV Phone **321** to the television set occurs upon voice command.

[0152] **FIG. 15** shows an alternate embodiment of the present invention, in which content, or the electronic address of content, is transmitted from the TV Phone **321** to a kiosk **416**. The kiosk **416** includes a wireless receiver **315** and a monitor **309** as described above, and is also connected to an ISP **363** as described above. However, unlike previous embodiments, the kiosk **416** also includes a local control device **418** which includes a payment module **420** therein. The payment module **420** tracks usage charges for providing content to the display screen. In this scheme, the TV Phone **321** communicates customer identity information, such as the telephone number of the TV Phone **321**, to the payment module **420**. The payment module **420** inhibits the completion of the process unless the payment module **420** properly authorizes the TV Phone **321** to use the monitor **309** for viewing content. This embodiment allows a TV Phone user to view content, or the content located at an electronic address, delivered to the TV Phone **321** on a larger screen display (here, monitor **309** of the kiosk **416**). The TV Phone **321** may be similar to the TV phones described above, or may be a WAP-enabled phone or an i-mode phone. The payment module **420** tracks usage fees and bills the paying party accordingly.

[0153] Alternate embodiments of the present invention not only indicate that a phone number can be called by a display light **325** on the TV Phone **321**, but also show the phone number in the LCD screen **111** (or other display screen) of the TV Phone **321**.

[0154] Alternate embodiments of the TV Phone **321** include a built-in camera (not shown) to allow the TV Phone **321** to act as a "picture phone," transmitting video along with the audio.

[0155] Alternate embodiments have a built in GPS device to determine the location of the TV Phone **321** in order to help determine which phone number is to be dialed or which data code is to accessed. The location determines which time zone the TV Phone **321** is operating from. With this knowledge, the device only needs to know which station or network is being accessed and broadcaster "playlists" provide the rest of the information. The location assists the use of the TV Phone **321** to receive phone numbers or data from location-based billboards or other media.

[0156] Alternate embodiments use the other location procedures, such as the triangulation to determine the location of the TV Phone **321**. U.S. Federal regulations have required that such location devices or software be incorporated into cell phones and cell phone networks in order to assist **911** emergency systems.

[0157] Although the present invention has been described as receiving data primarily from a television set, it may receive data, phone numbers or access codes from other appliances, such as radios. It may receive data from wireless transmitters in billboards, or other outdoor signs, or other printed or audiovisual media or data sources. The scope of the present invention is to enable an individual with a TV phone to access additional information regarding other real world objects and events with a click of the button or at a verbal command.

[0158] Although the present invention has been described as receiving phone number data over the television blanking interval, it may also receive that data over other intervals, over other portions of the broadcast or wireless spectrum, over the Internet or other network, over segregated channels or data streams over a cable television network, along with or over the communications transfer of online or broadcast program guides (including interactive program guides), as additional coded data along with the standard television signal, over portions of the additional spectrum allocated with HDTV (High Definition TV) channels, and other forms, methods and protocols for data distribution.

[0159] Although the disclosure above refers to connecting viewers to "web sites" and "web site addresses," the scope of the present invention includes other non-Internet-type electronic addressing schemes wherein a user inputs a location or address containing desired content and an electronic network connects the user to the location or address to obtain the content.

[0160] The present invention may be implemented with any combination of hardware and software. If implemented as a computer-implemented apparatus, the present invention is implemented using means for performing all of the steps and functions described above.

[0161] The present invention can be included in an article of manufacture (e.g., one or more computer program products) having, for instance, computer useable media. The media has embodied therein, for instance, computer readable program code means for providing and facilitating the mechanisms of the present invention. The article of manufacture can be included as part of a computer system or sold separately.

[0162] It will be appreciated by those skilled in the art that changes could be made to the embodiments described above without departing from the broad inventive concept thereof. It is understood, therefore, that this invention is not limited to the particular embodiments disclosed, but it is intended to cover modifications within the spirit and scope of the present invention as defined by the appended claims.

What is claimed is:

1. A method of using a telephone device to allow a user to communicate with a remotely located entity, the telephone device including (i) a button which facilitates communication between the telephone device and the remotely located entity, and (ii) a wireless receiver, the method comprising:

(a) an object or a device connected to an object emitting a signal containing a telephone number of the remotely located entity;

(b) the wireless receiver receiving the signal emitted by the object or the device connected to the object; and

(c) the telephone device automatically establishing two-way communication with the remotely located entity upon selection by the user of the button, wherein selection of the button causes the telephone device to automatically dial the telephone number of the remotely located entity.

2. The method of claim 1 wherein the object is a set-top box of a TV system, the method further comprising:

(d) the set-top box receiving the telephone number from broadcast signals sent over the TV system, wherein step (a) is performed by the set-top box emitting a signal containing the telephone number of the remotely located entity.

3. The method of claim 2 wherein the telephone device is a wireless telephone device having a base station in the set-top box, and the set-top box is hardwired to a telephone outlet, and wherein step (c) is performed by using the hardwired telephone outlet in the base station of the set-top box to establish two-way communication with the remotely located entity.

4. The method of claim 2 wherein the telephone device is a cellular telephone device, and step (c) is performed by using a cellular telephone network to establish two-way communication with the remotely located entity.

5. The method of claim 1 wherein the automatic establishment of two-way communication with the remotely located entity in step (c) occurs by:

(i) the telephone device automatically dialing the telephone number of the remotely located entity and communicating user identity information to the remotely located entity, and

(ii) the remotely located entity using the user identity information to initiate a call to the telephone device.

6. The method of claim 5 wherein the user identity information is the telephone number of the telephone device.

7. The method of claim 1 further comprising:

(d) the user engaging in an audio session with a person or machine at the remotely located entity upon establishing the two-way communication.

8. The method of claim 1 wherein the telephone device includes transceiver circuitry associated with normal telephone communication functions which is separate from the

wireless receiver, and the two-way communication in step (c) uses only the transceiver circuitry.

9. The method of claim 1 wherein the object is an outdoor sign or billboard.

10. The method of claim 1 wherein the device connected to an object is a wireless transmitter connected to a television, the method further comprising:

(d) the television receiving the telephone number from broadcast signals received by the television, wherein step (a) is performed by the wireless transmitter emitting a signal containing the telephone number of the remotely located entity.

11. A method of using a telephone device to allow a user to communicate with a remotely located entity, the telephone device including (i) a button which facilitates communication between the telephone device and the remotely located entity, and (ii) a wireless receiver, the method comprising:

(a) an object or a device connected to an object emitting a signal containing an electronic address of the remotely located entity;

(b) the wireless receiver receiving the signal emitted by the object or the device connected to the object; and

(c) the telephone device automatically establishing communication with the remotely located entity upon selection by the user of the button, wherein selection of the button causes the telephone device to automatically contact the electronic address contained within the emitted signal.

12. The method of claim 11 wherein the electronic address is a web site address of the remotely located entity, and selection of the button causes the telephone device to automatically go to the web site address of the remotely located entity.

13. The method of claim 12 wherein the telephone device further includes (iii) a display screen that displays content, the method further comprising:

(d) the web site of the remotely located entity displaying content on the display screen retrieved by the telephone device during the communication with the remotely located entity.

14. The method of claim 11 wherein the automatic establishment of two-way communication with the remotely located entity in step (c) occurs by:

(i) the telephone device automatically dialing the telephone number of the remotely located entity and communicating user identity information to the remotely located entity, and

(ii) the remotely located entity using the user identity information to initiate a call to the telephone device.

15. The method of claim 14 wherein the user identity information is the telephone number of the telephone device.

16. The method of claim 11 wherein the telephone device includes transceiver circuitry associated with normal telephone communication functions which is separate from the wireless receiver, and the communication in step (c) uses only the transceiver circuitry.

17. A method of using a telephone device to view content on a nearby display screen which is not physically connected to the telephone device, the telephone device including (i) a display screen which displays content, (ii) a button which facilitates communication of content between the telephone device and a local control device connected to the nearby display screen, and (iii) a wireless transmitter, the method comprising:

(a) storing content in the telephone device;

(b) displaying the content on the display screen of the telephone device;

(c) communicating the content from the telephone device to the local control device via a signal sent by the wireless transmitter upon selection of the button; and

(d) the local control device receiving the signal and providing the content to the nearby display screen for display thereon.

18. The method of claim 17 wherein the local control device includes a decoder, and step (d) further comprises the local control device using the decoder to convert the signal received from the telephone device into a format for viewing by the nearby display screen.

19. The method of claim 17 wherein the content shown on the telephone device display screen is a portion of a full content image, and step (d) further comprises providing the full content image to the local control device for display on the nearby display screen.

20. A method of using a telephone device to view content on a nearby display screen which is not physically connected to the telephone device, the telephone device including (i) a display screen which displays content, or a portion thereof, (ii) a button which facilitates communication of content between the telephone device and a local control device connected to the nearby display screen, and (iii) a wireless transmitter, the method comprising:

(a) storing content, or a portion thereof, and an electronic address of the content in the telephone device;

(b) displaying the content, or a portion thereof, on the display screen of the telephone device;

(c) communicating the electronic address of the content from the telephone device to the local control device via a signal sent by the wireless transmitter upon selection of the button;

(d) the local control device receiving the signal and transmitting a request over an electronic network to retrieve the content from a remote location; and

(e) upon receiving the content, the local control device provides the content to the nearby display screen for display thereon.

21. The method of claim 20 wherein the content shown on the telephone device display screen is a portion of a full content image, and step (e) further comprises providing the full content image to the local control device for display on the nearby display screen.

22. The method of claim 20 wherein the electronic address is a web site address, the remote location is a web site, and the electronic network is the Internet.

23. The method of claim 20 further comprising:

(f) retrieving the content, or a portion thereof, that is stored in the telephone device in step (a) from a remote source.

24. The method of claim 20 wherein the local control device further comprises a payment module which tracks

usage charges for providing content to the nearby display screen, the method further comprising:

(f) the telephone device communicating customer identity information to the payment module; and

(g) the payment module inhibiting at least one of steps (c), (d) and (e) from occurring unless the payment module properly authorizes the telephone device to use the nearby display screen for viewing content.

25. The method of claim 24 wherein the customer identity information is the telephone number of the telephone device.

26. A method of using a telephone device to view content on a nearby display screen which is not physically connected to the telephone device, the telephone device including (i) a display screen which displays an electronic address of content, (ii) a button which facilitates communication of the electronic address between the telephone device and a local control device connected to the nearby display screen, and (iii) a wireless transmitter, the method comprising:

(a) the telephone device retrieving an electronic address of content from a remote source, and storing the electronic address in the telephone device;

(b) displaying the electronic address on the display screen of the telephone device;

(c) communicating the electronic address from the telephone device to the local control device via a signal sent by the wireless transmitter upon selection of the button; and

(d) the local control device receiving the signal and transmitting a request over an electronic network to retrieve content at the electronic address from a remote location; and

(e) upon receiving the content, the local control device provides the content to the nearby display screen for display thereon.

27. The method of claim 26 wherein the local control device further comprises a payment module which tracks usage charges for providing content to the nearby display screen, the method further comprising:

(f) the telephone device communicating customer identity information to the payment module; and

(g) the payment module inhibiting at least one of steps (c), (d) and (e) from occurring unless the payment module properly authorizes the telephone device to use the nearby display screen for viewing content.

28. The method of claim 27 wherein the customer identity information is the telephone number of the telephone device.

29. The method of claim 26 wherein the electronic address is a web site address, the remote location is a web site, and the electronic network is the Internet.

30. A method of using a wireless telephone device and a set-top box of a TV system to allow a user to communicate with a remotely located entity, the wireless telephone device including a button which facilitates communication between the telephone and the remotely located entity, the set-top box including a base station of the wireless telephone device, the set-top box being in communication with a telephone system and being connected to a television, the method comprising:

(a) the set-top box storing a telephone number and causes telephone number information to be displayed on the television; and

(b) upon selection by the user of the button, the telephone device sending a signal to the set-top box to dial the telephone number, thereby establishing two-way communication between the telephone device and the remotely located entity via base station and the telephone system.

31. The method of claim 30 further comprising:

(c) the set-top box prestoring a listing of telephone numbers corresponding to specified television stations, wherein the telephone number dialed in step (b) is the prestored telephone number of the currently active television channel.

32. The method of claim 31 further comprising:

(d) the television station automatically forwarding any received telephone calls to a telephone number of the remotely located entity.

33. The method of claim 30 wherein the establishment of two-way communication with the remotely located entity in step (b) occurs by:

(i) the telephone device sending a signal to the set-top box to dial the telephone number of the remotely located entity and communicating user identity information to the remotely located entity, and

(ii) the remotely located entity using the user identity information to initiate a call to the telephone device.

34. The method of claim 33 wherein the user identity information is the telephone number of the telephone device.

35. The method of claim 30 further comprising:

(c) the user engaging in an audio session with a person or machine at the remotely located entity upon establishing the two-way communication.

36. The method of claim 30 wherein the telephone system is external to the TV system.

37. The method of claim 30 wherein the telephone system uses the TV system for establishing and maintaining the two-way communication.

38. The method of claim 30 wherein the telephone number information is the telephone number stored at the set-top box.

39. The method of claim 30 wherein the telephone number information is a telephone icon which indicates that the telephone number stored at the set-top box will be dialed upon selection of the button.

40. The method of claim 30 wherein the telephone number information is the telephone number stored at the set-top box and a telephone icon which indicates that the telephone number stored at the set-top box will be dialed upon selection of the button.

41. The method of claim 30 further comprising:

(c) the set-top box receiving the telephone number which is stored in step (a) from broadcast signals sent by the TV system.

* * * * *