US 20190203572A1

(19) United States

(12) Patent Application Publication

(10) Pub. No.: US 2019/0203572 A1

(43) Pub. Date: Jul. 4, 2019

Morris et al.

(54) **MOBILE FRACTURING PUMP TRANSPORT FOR HYDRAULIC FRACTURING OF SUBSURFACE GEOLOGICAL FORMATIONS**

(71) Applicant: **TYPHON TECHNOLOGY SOLUTIONS, LLC**, The Woodlands, TX (US)

(72) Inventors: **Jeffrey G. Morris**, The Woodlands, TX (US); **Neal Jensen**, Henderson, NV (US); **Adrian Benjamin Bodishbaugh**, The Woodlands, TX (US)

(21) Appl. No.: **16/294,786**

(22) Filed: **Mar. 6, 2019**

Related U.S. Application Data

(63) Continuation of application No. 15/253,686, filed on Aug. 31, 2016, which is a continuation-in-part of application No. 14/971,450, filed on Dec. 16, 2015, now Pat. No. 9,534,473.

(60) Provisional application No. 62/094,773, filed on Dec. 19, 2014.

Publication Classification

(51) **Int. Cl.**

E21B 43/26	(2006.01)
F04B 23/04	(2006.01)
F04B 9/02	(2006.01)
F04B 17/03	(2006.01)
F04B 17/06	(2006.01)
F16D 48/06	(2006.01)

(52) **U.S. Cl.**

CPC ***E21B 43/26*** (2013.01); ***F04B 23/04*** (2013.01); ***F04B 9/02*** (2013.01); *F16D 2021/0653* (2013.01); ***F04B 17/06*** (2013.01); ***F16D 48/062*** (2013.01); ***F04B 17/03*** (2013.01)

(57) **ABSTRACT**

Providing pressurized fracturing fluid with a fracturing pump transport comprising a first fracturing pump and a second fracturing pump that are coupled on opposite sides of a dual shaft electric motor. A first drive line assembly comprising a first engagement coupling that allows for selective engagement and/or disengagement of the first fracturing pump with the dual shaft electric motor. A second drive line assembly comprising a second engagement coupling that allows for selective engagement and/or disengagement of the second fracturing pump with the dual shaft electric motor. The fracturing pump transport also comprising an engagement panel that allows for selective engagement or disengagement at the first engagement coupling based on receiving a remote command.

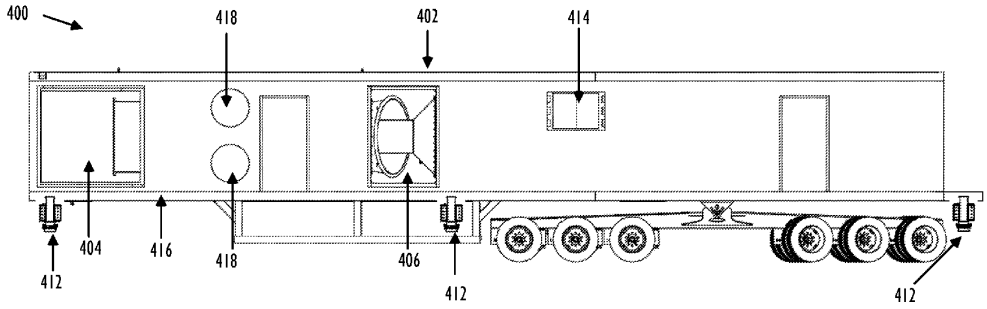

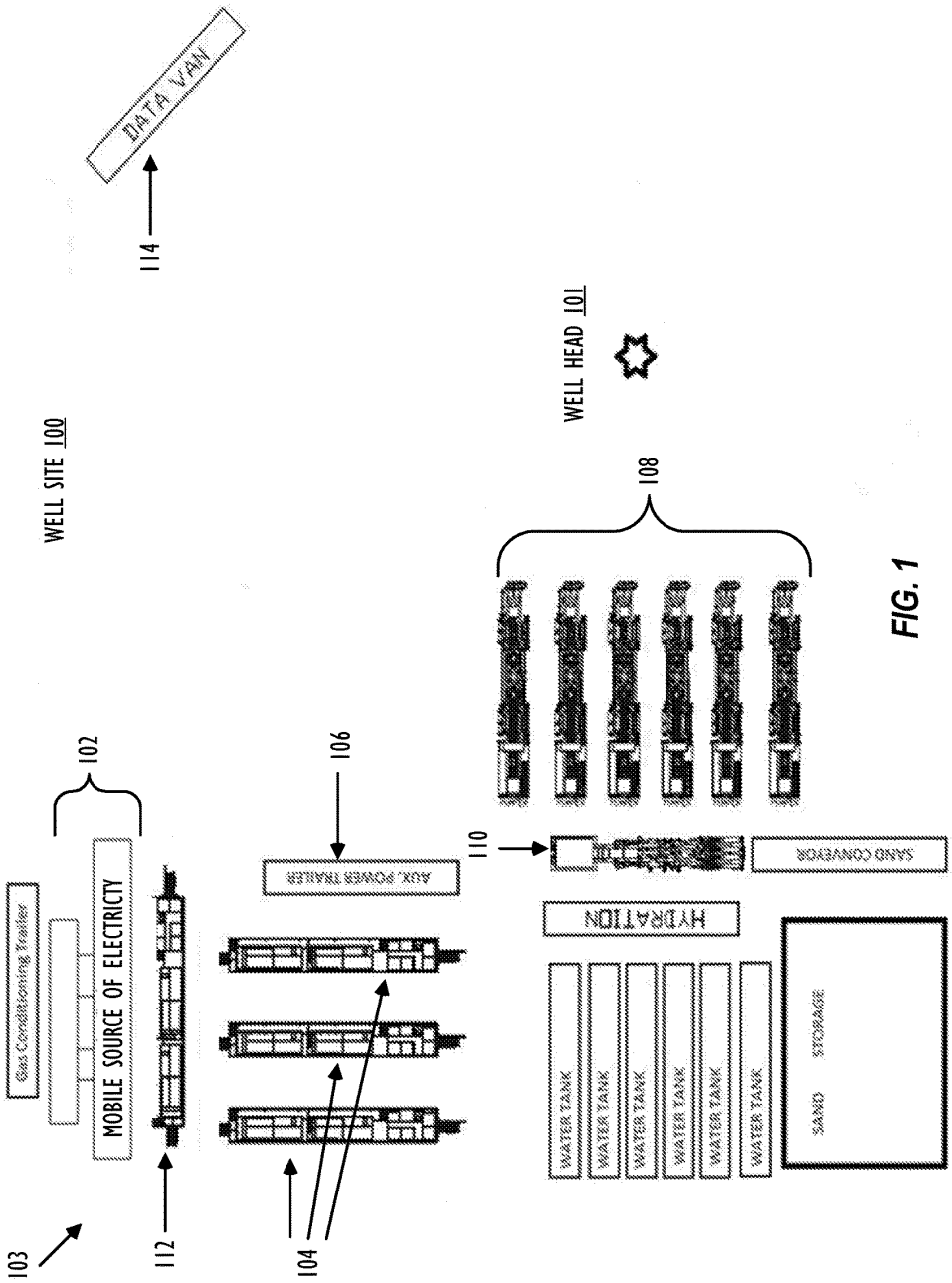
WELL SITE 100
DATA VAN
114
WELL HEAD 101
108
102
106
110
Gas Conditioning Trailer
MOBILE SOURCE OF ELECTRICTY
AUX. POWER TRAILER
SAND CONVEYOR
HYDRATION
WATER TANK
WATER TANK
WATER TANK
WATER TANK
WATER TANK
WATER TANK
SAND STORAGE
103
112
104

FIG. 1

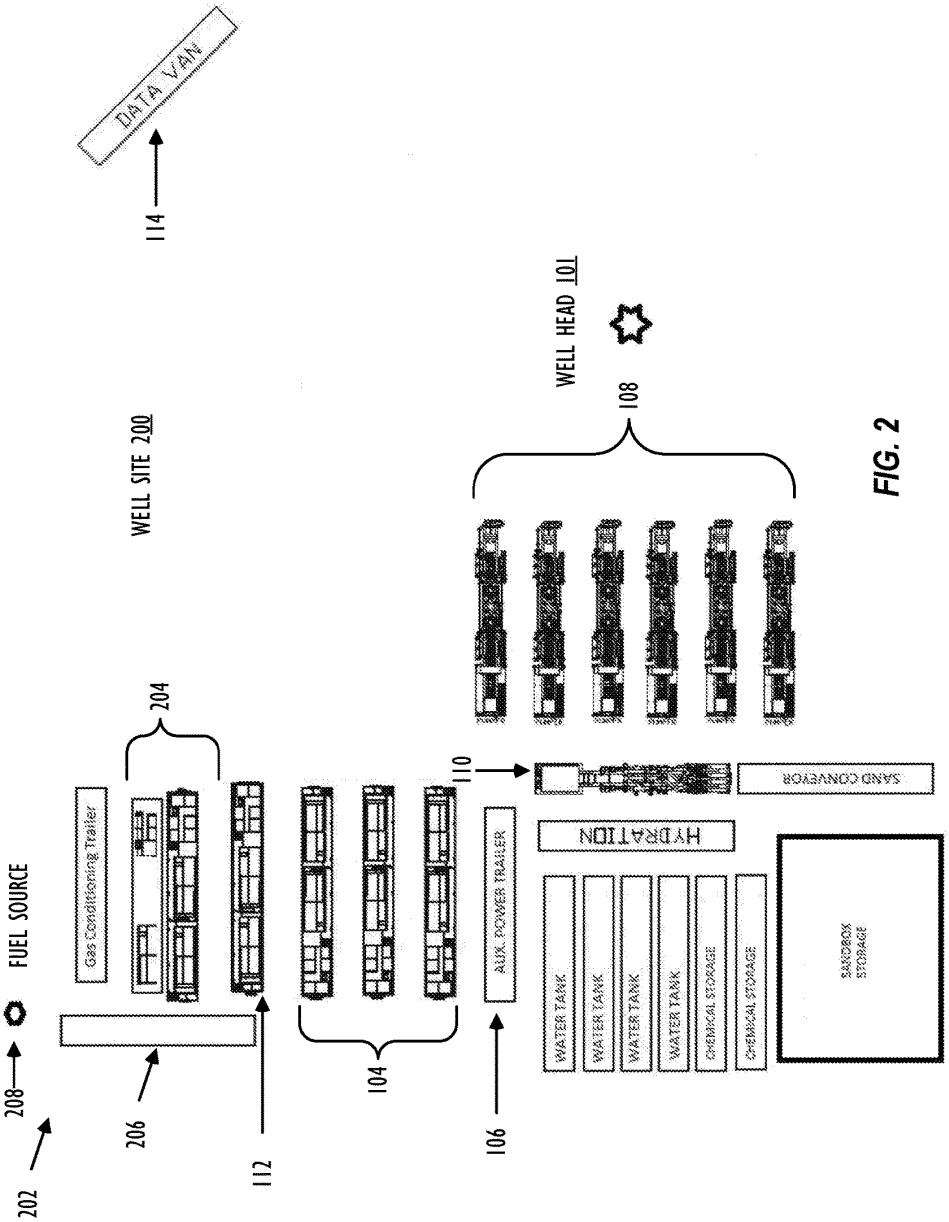
DATA VAN
114
WELL SITE 200
WELL HEAD 101
108
204
FUEL SOURCE
Gas Conditioning Trailer
110
SAND CONVEYOR
HYDRATION
AUX. POWER TRAILER
WATER TANK
WATER TANK
WATER TANK
WATER TANK
CHEMICAL STORAGE
CHEMICAL STORAGE
SANDBOX STORAGE
208
206
112
104
106
202

FIG. 2

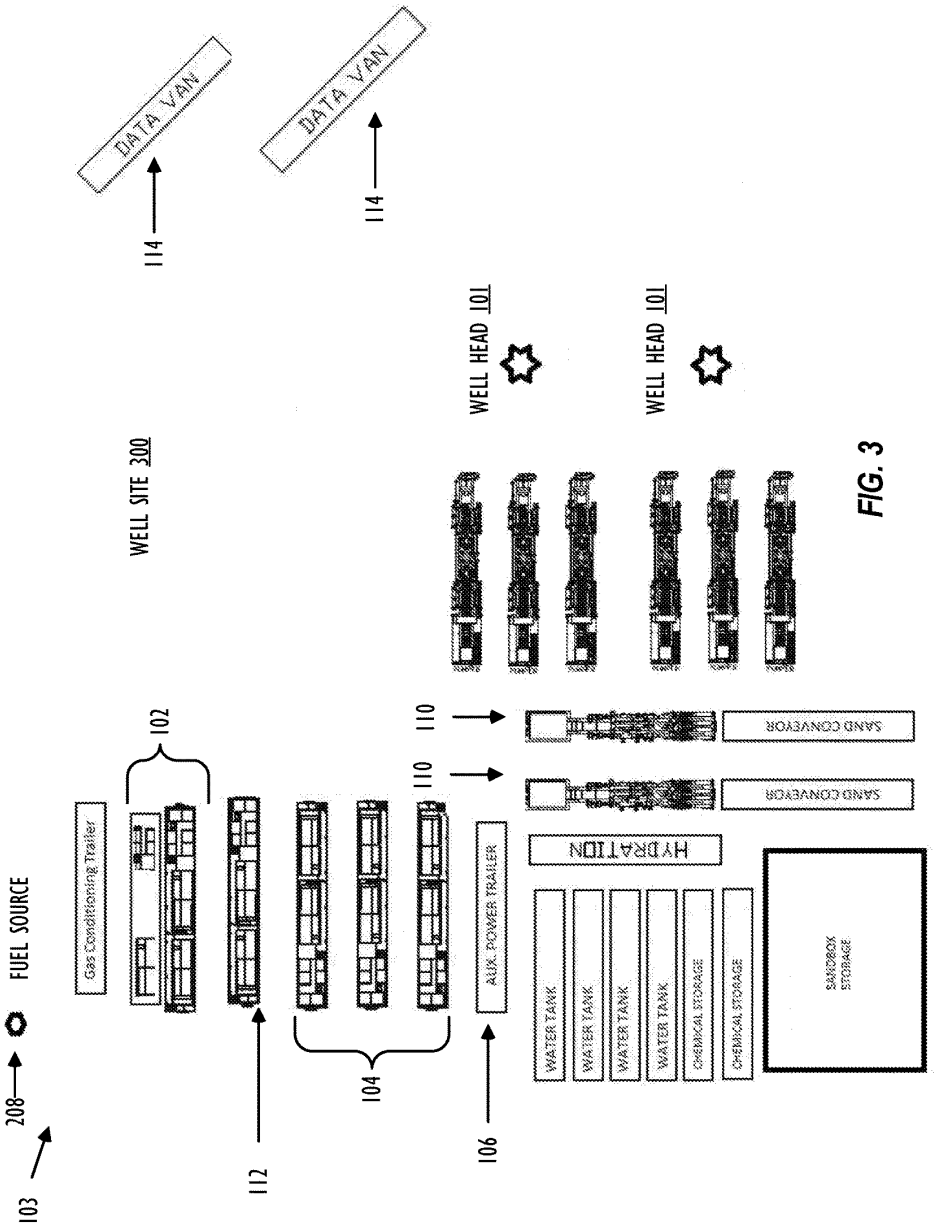
103
208
FUEL SOURCE
Gas Conditioning Trailer
102
112
104
106
AUX. POWER TRAILER
110
110
SAND CONVEYOR
SAND CONVEYOR
HYDRATION
WATER TANK
WATER TANK
WATER TANK
WATER TANK
CHEMICAL STORAGE
CHEMICAL STORAGE
SANDBOX STORAGE
WELL SITE 300
WELL HEAD 101
WELL HEAD 101
DATA VAN
DATA VAN
114
114

FIG. 3

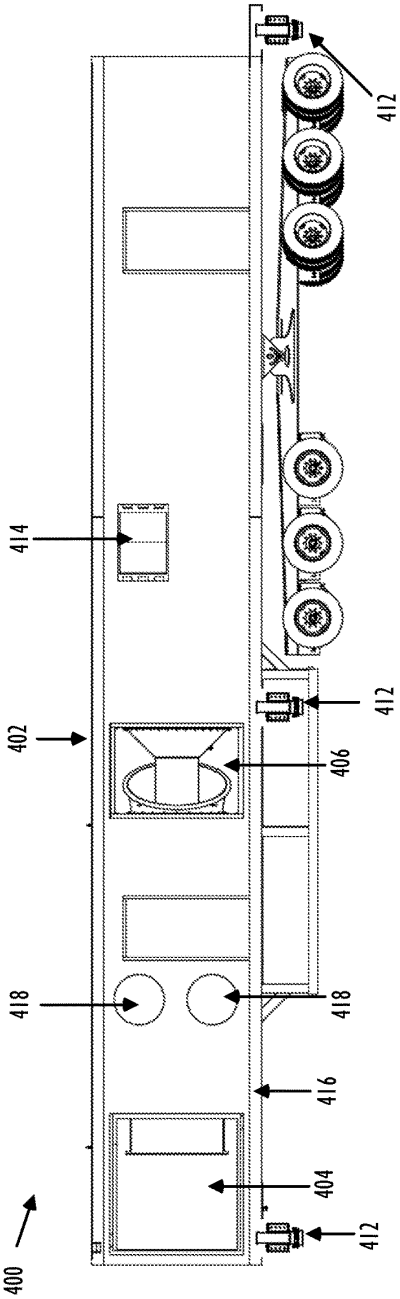
400
412
404
416
418
418
402
406
412
414
412

FIG. 4A

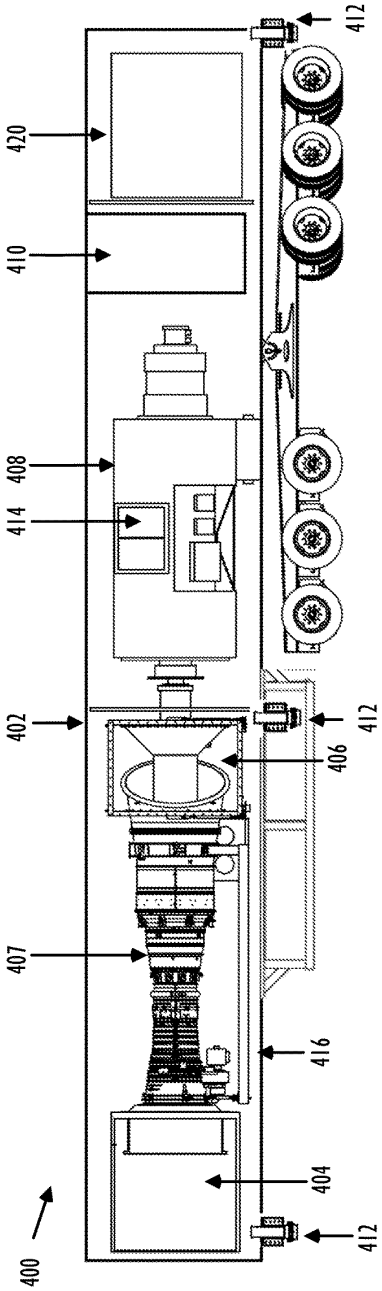
400
412
404
416
407
402
406
412
414
408
410
420
412

FIG. 4B

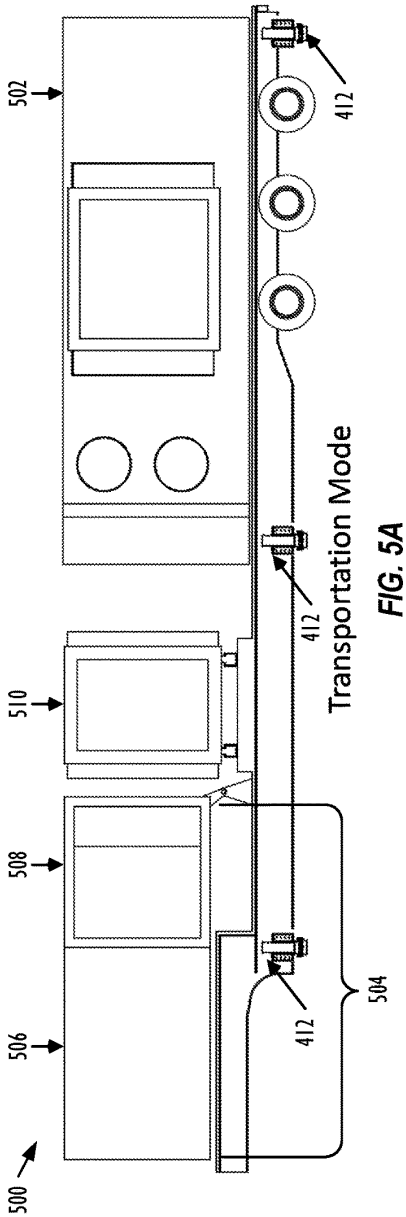
500
502
506
508
510
412
412
412
504
Transportation Mode

FIG. 5A

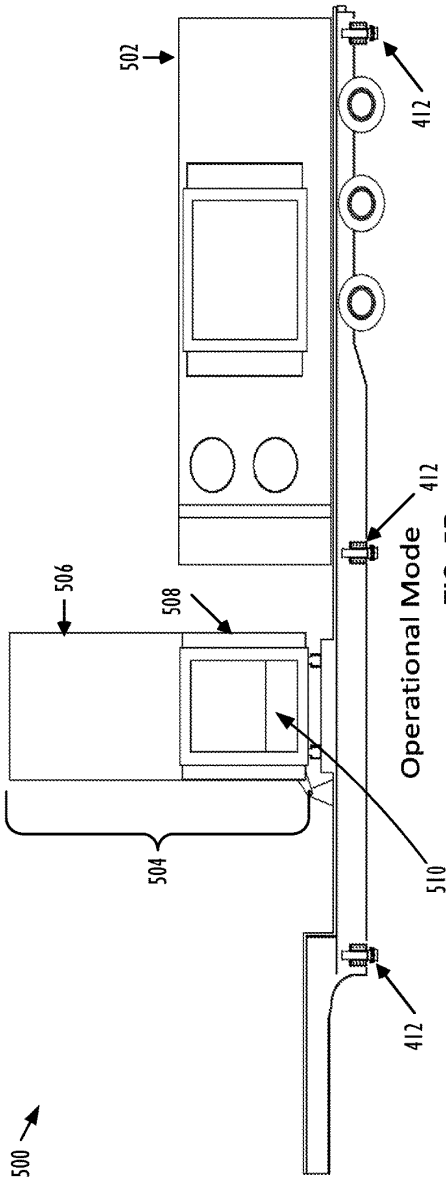
500
502
506
508
504
510
412
412
412
Operational Mode

FIG. 5B

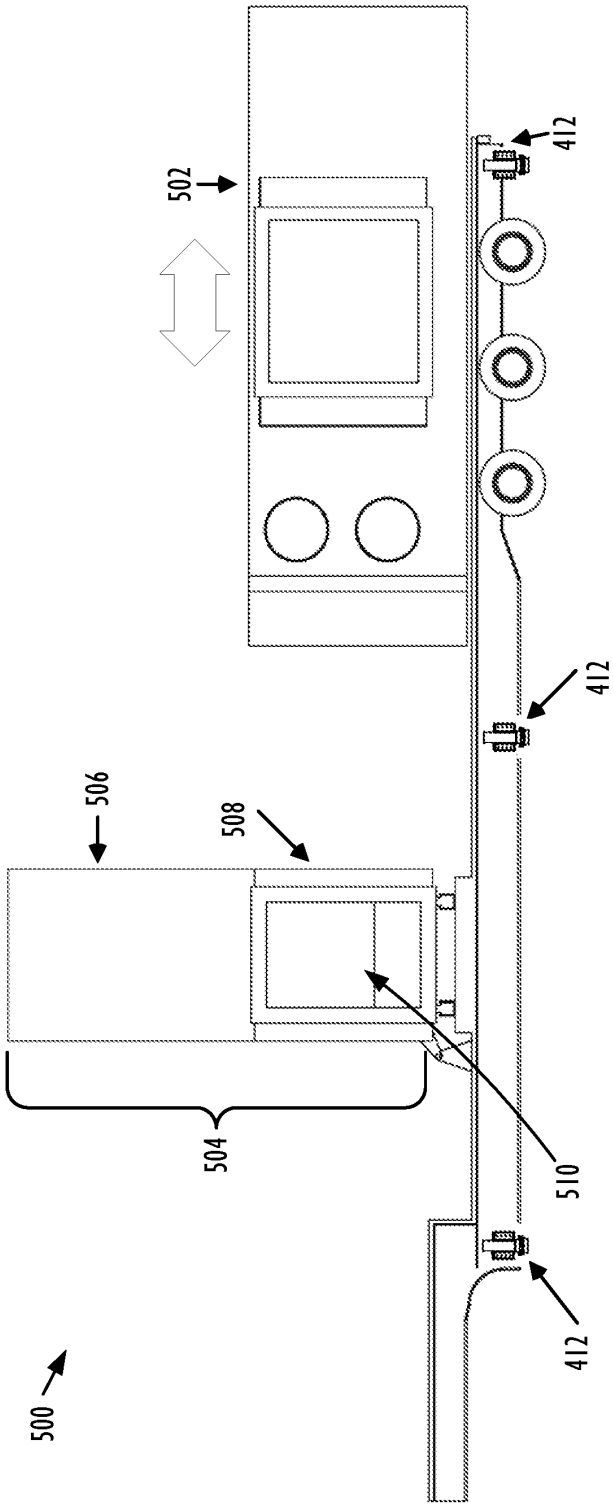

FIG. 5C

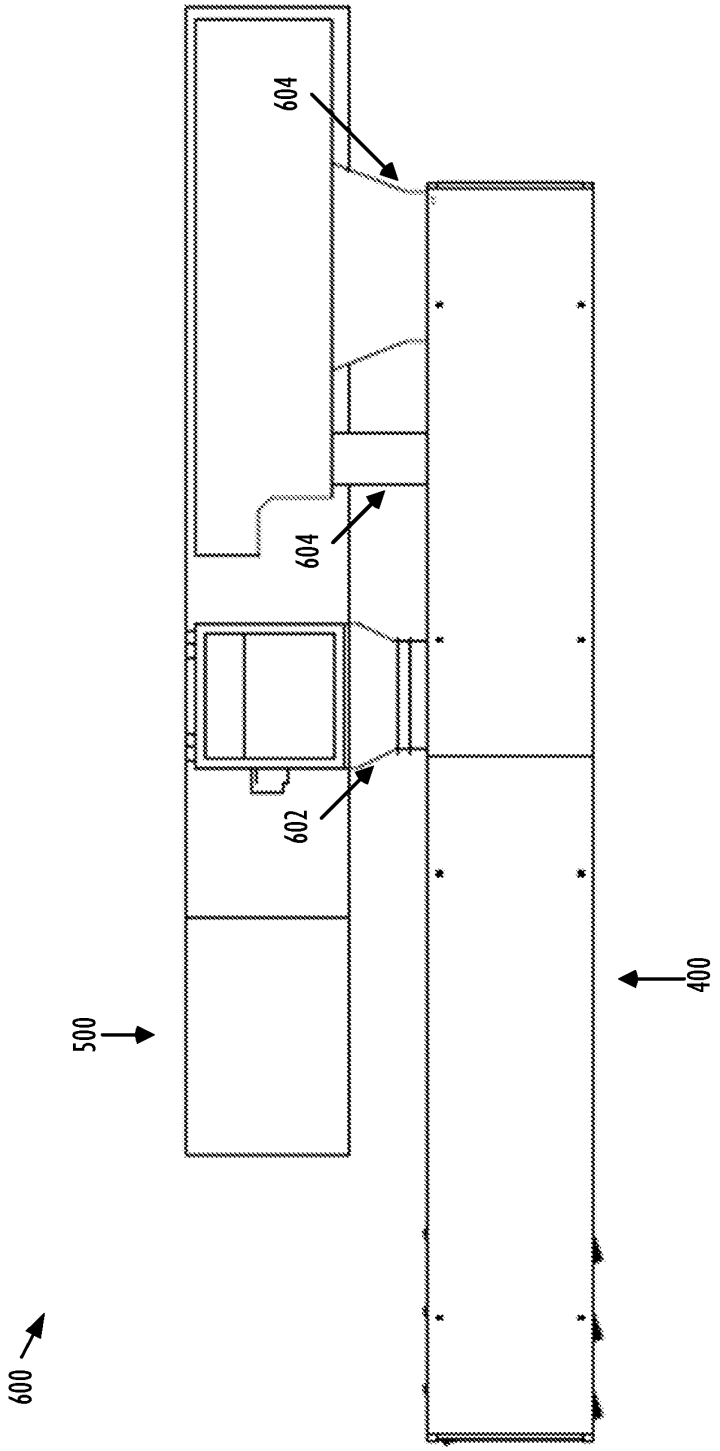

FIG. 6

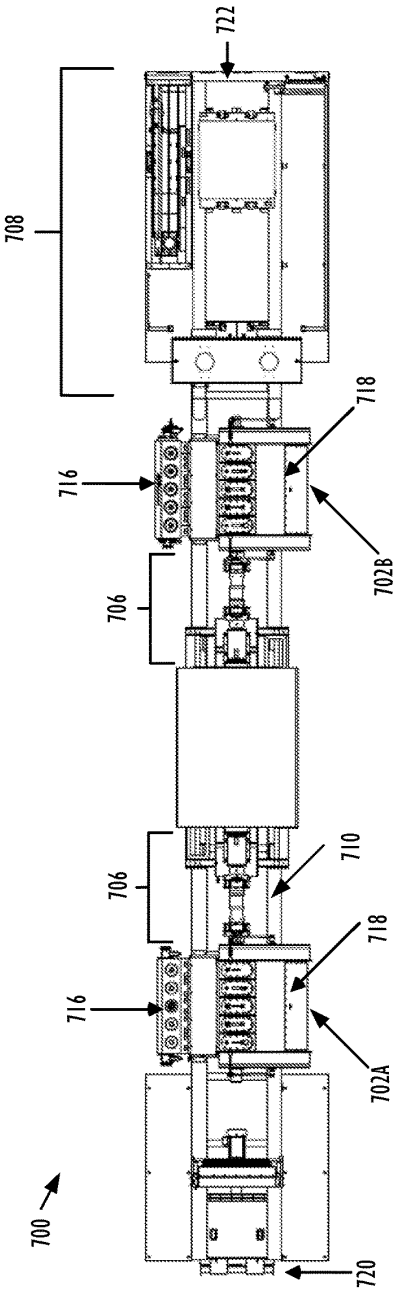
722
708
718
716
702B
706
706
710
718
716
702A
700
720

FIG. 7A

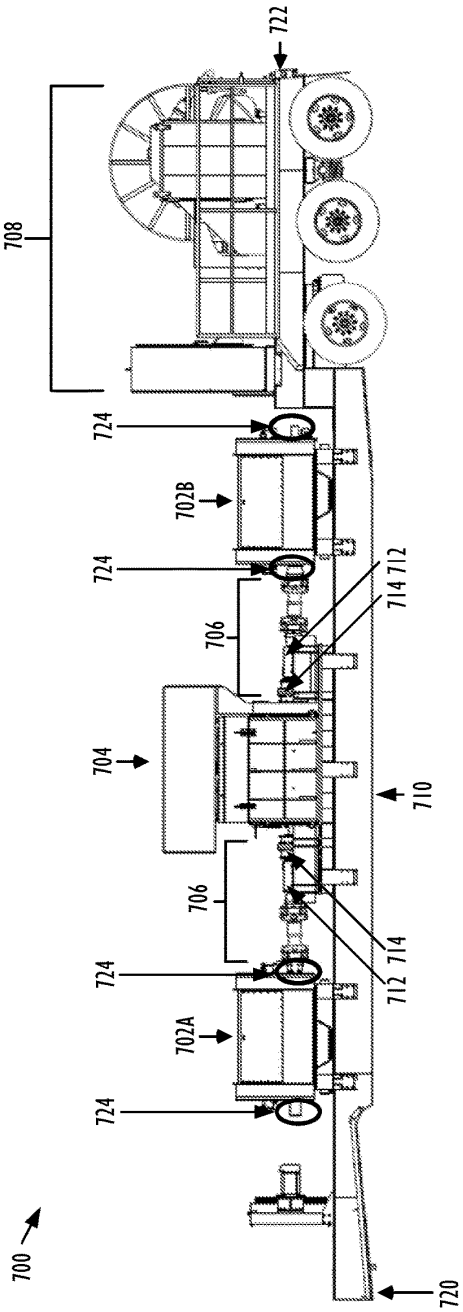
722
708
724
702B
724
714 712
706
704
710
706
714
712
724
702A
724
700
720

FIG. 7B

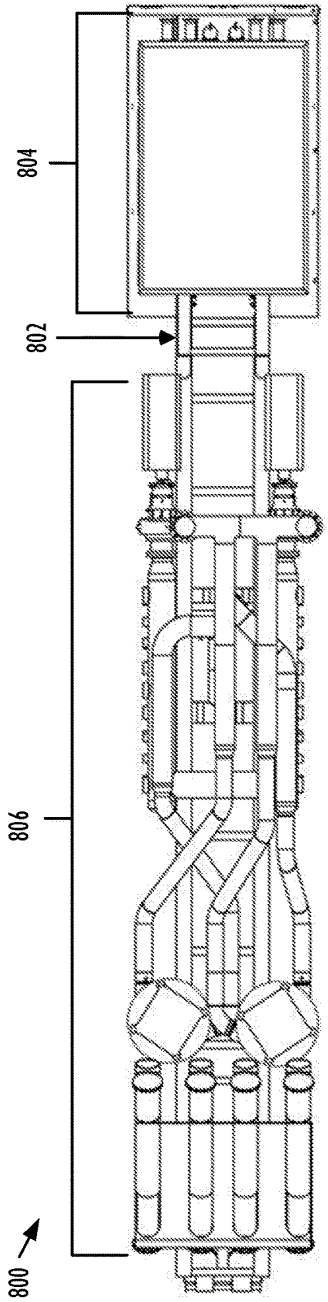

FIG. 8A

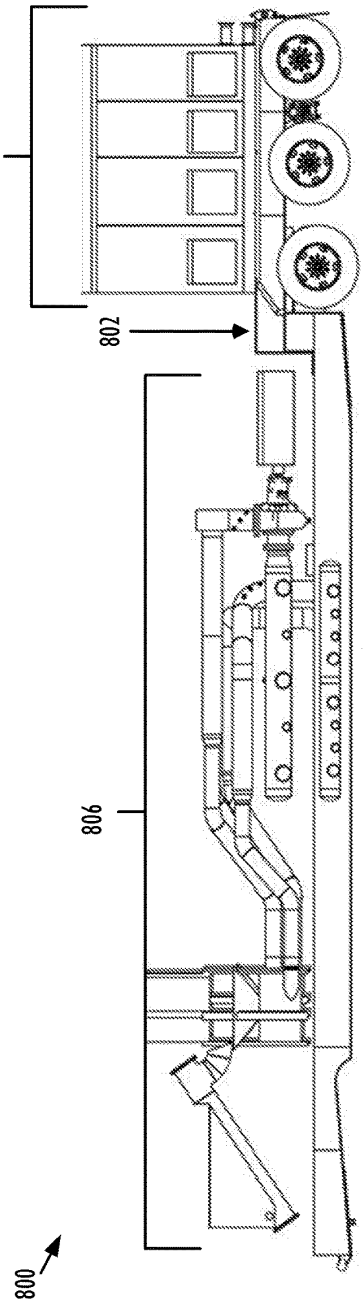

FIG. 8B

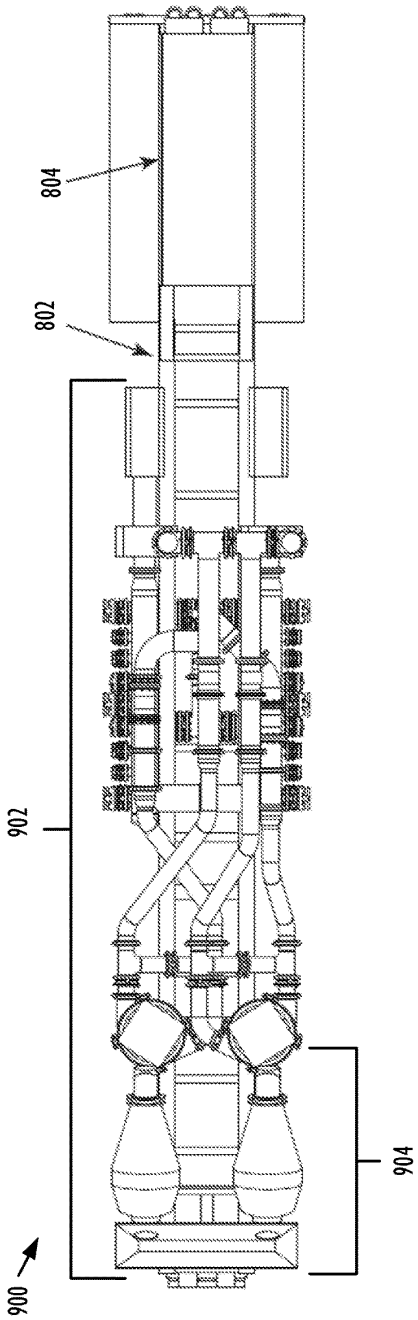

FIG. 9A

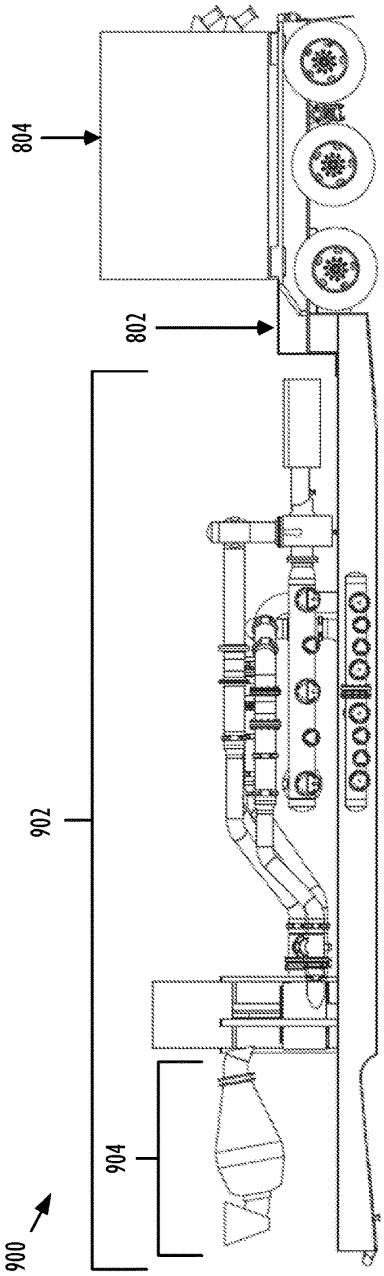

FIG. 9B

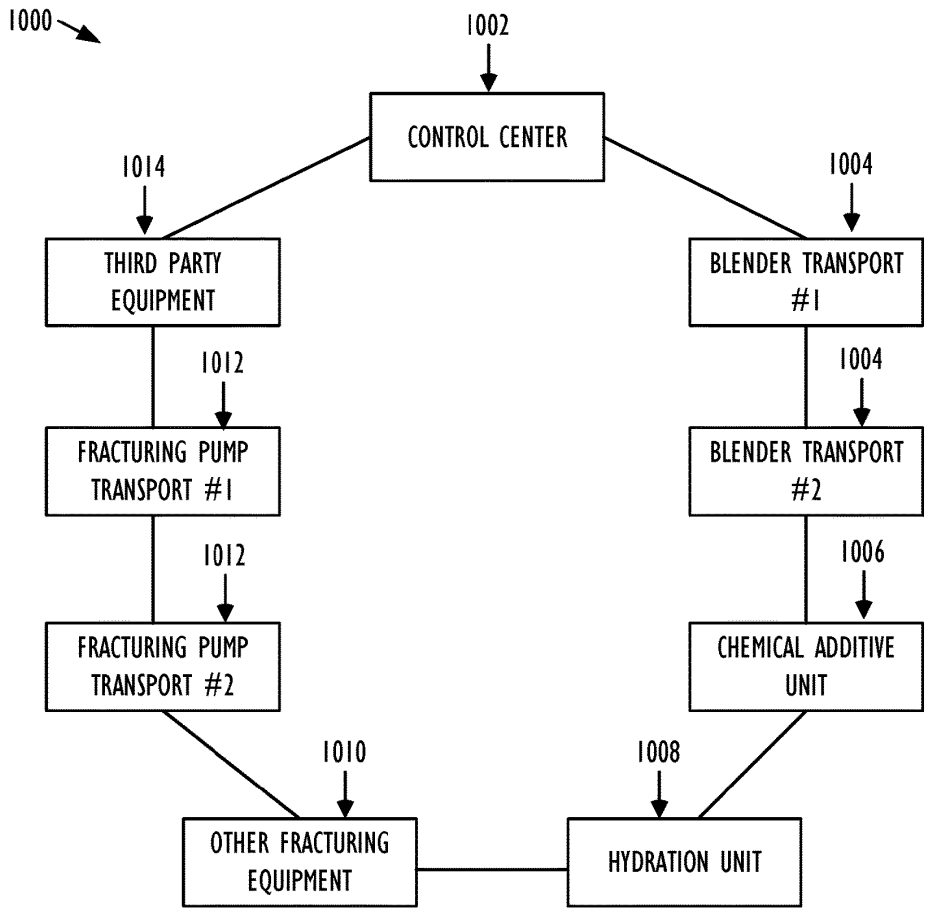
1000
1002
CONTROL CENTER
1014
THIRD PARTY EQUIPMENT
1004
BLENDER TRANSPORT #1
1012
FRACTURING PUMP TRANSPORT #1
1004
BLENDER TRANSPORT #2
1012
FRACTURING PUMP TRANSPORT #2
1006
CHEMICAL ADDITIVE UNIT
1010
OTHER FRACTURING EQUIPMENT
1008
HYDRATION UNIT

FIG. 10

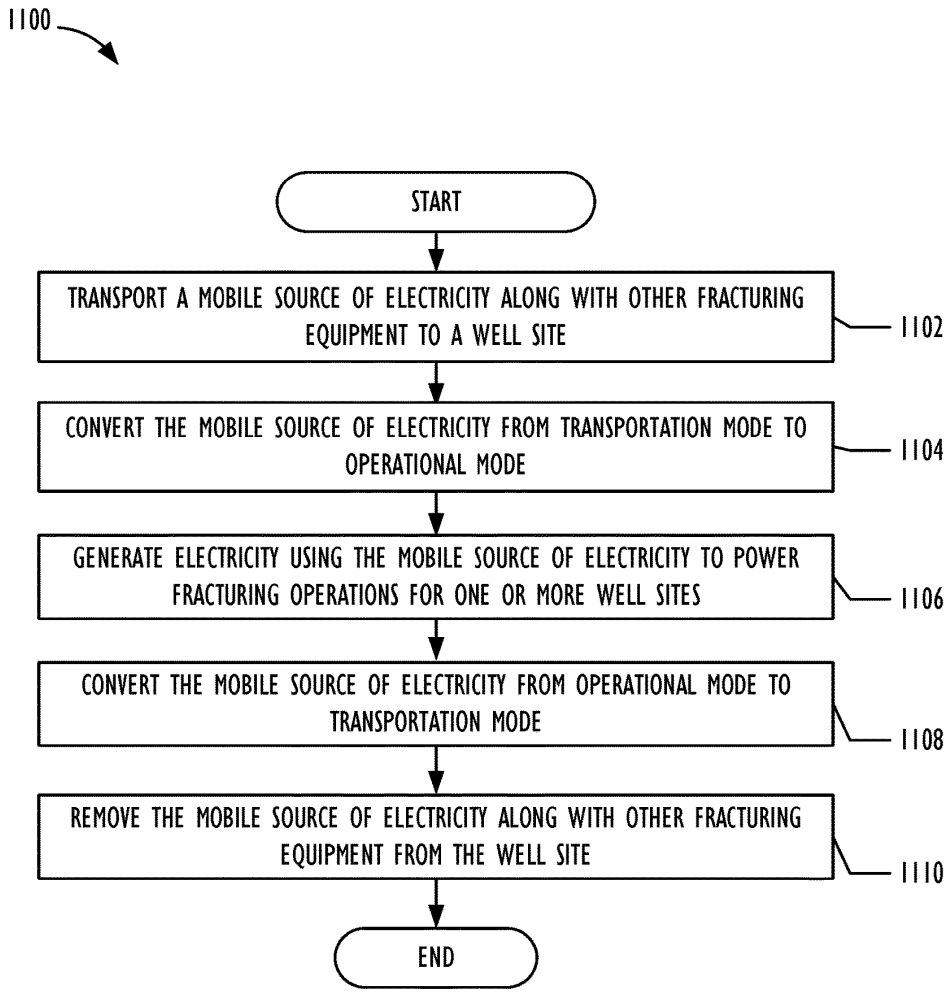
1100
START
TRANSPORT A MOBILE SOURCE OF ELECTRICITY ALONG WITH OTHER FRACTURING EQUIPMENT TO A WELL SITE
1102
CONVERT THE MOBILE SOURCE OF ELECTRICITY FROM TRANSPORTATION MODE TO OPERATIONAL MODE
1104
GENERATE ELECTRICITY USING THE MOBILE SOURCE OF ELECTRICITY TO POWER FRACTURING OPERATIONS FOR ONE OR MORE WELL SITES
1106
CONVERT THE MOBILE SOURCE OF ELECTRICITY FROM OPERATIONAL MODE TO TRANSPORTATION MODE
1108
REMOVE THE MOBILE SOURCE OF ELECTRICITY ALONG WITH OTHER FRACTURING EQUIPMENT FROM THE WELL SITE
1110
END

FIG. 11

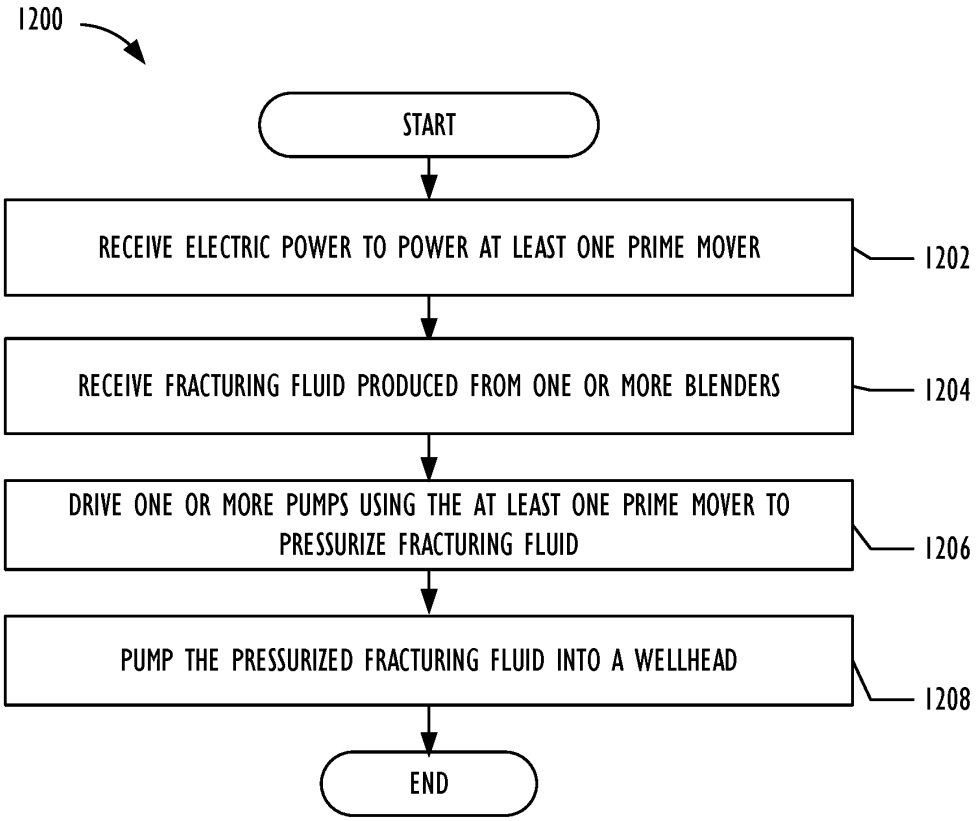
1200
START
RECEIVE ELECTRIC POWER TO POWER AT LEAST ONE PRIME MOVER
1202
RECEIVE FRACTURING FLUID PRODUCED FROM ONE OR MORE BLENDERS
1204
DRIVE ONE OR MORE PUMPS USING THE AT LEAST ONE PRIME MOVER TO PRESSURIZE FRACTURING FLUID
1206
PUMP THE PRESSURIZED FRACTURING FLUID INTO A WELLHEAD
1208
END

FIG. 12

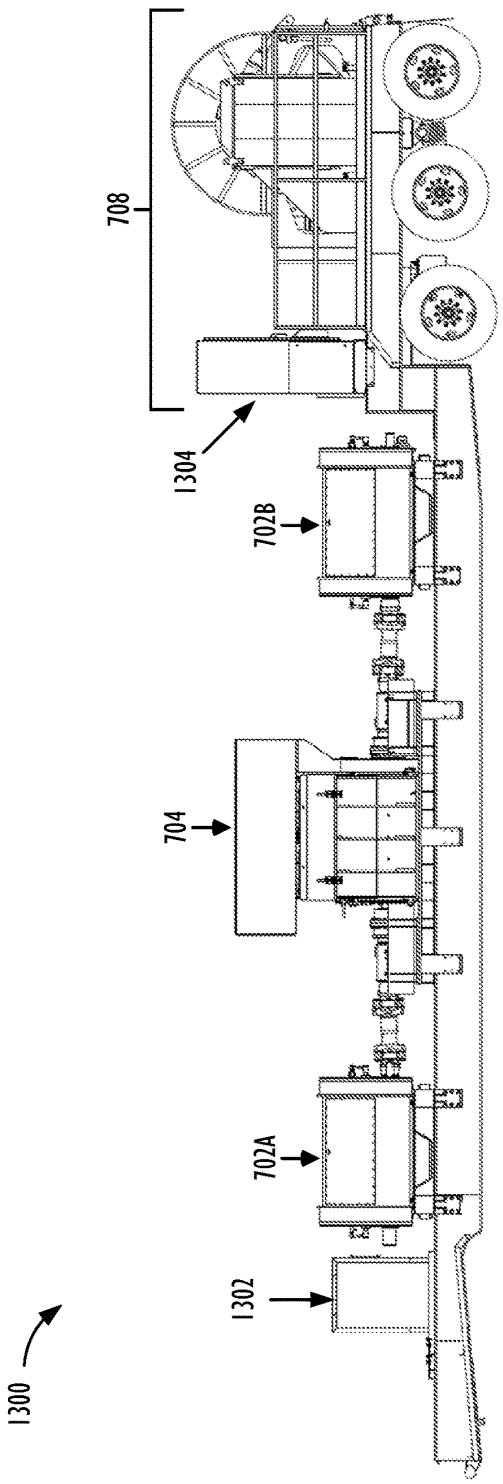

FIG. 13

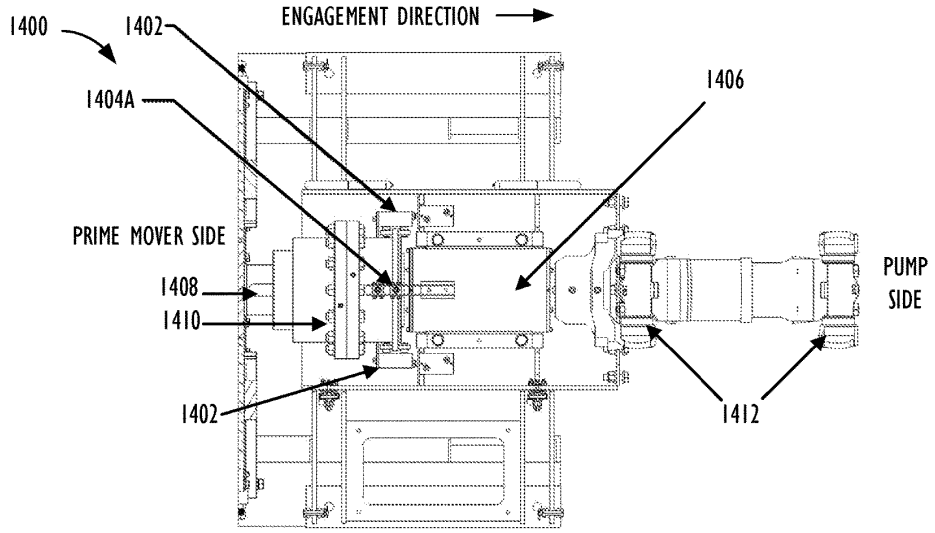

FIG. 14A

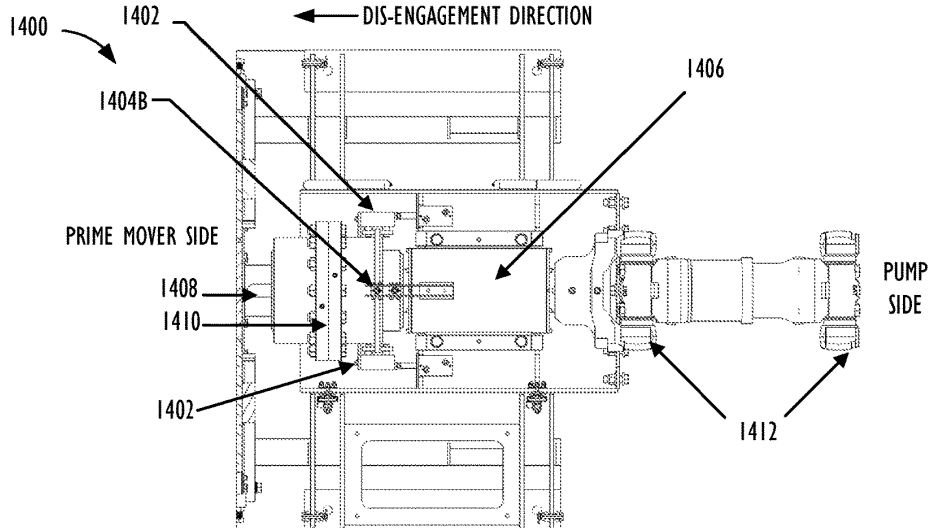

FIG. 14B

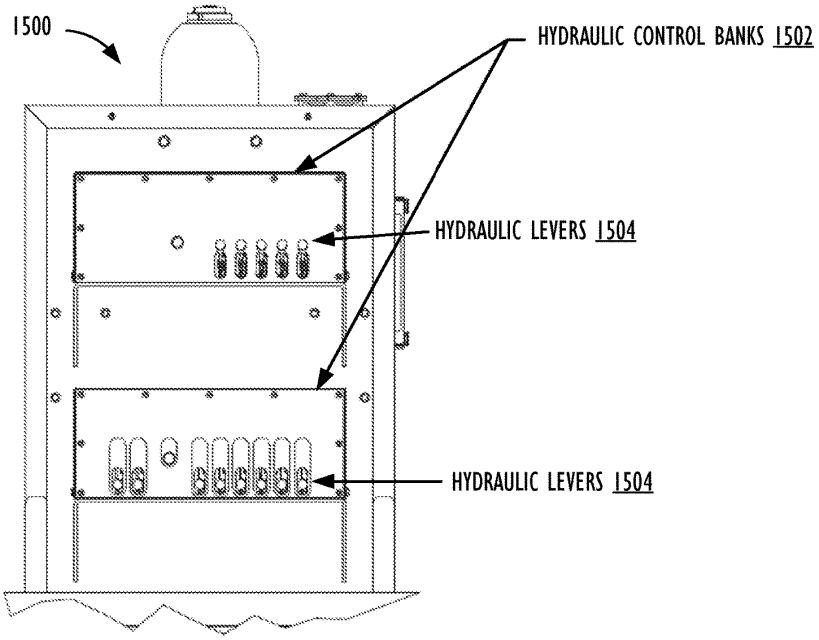

FIG. 15A

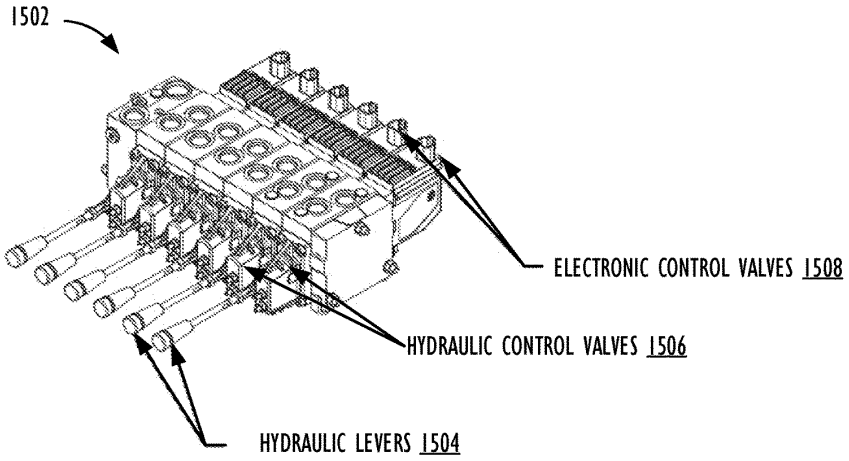

FIG. 15B

MOBILE FRACTURING PUMP TRANSPORT FOR HYDRAULIC FRACTURING OF SUBSURFACE GEOLOGICAL FORMATIONS

CROSS-REFERENCE TO RELATED APPLICATIONS

[0001] This application is a continuation of U.S. patent application Ser. No. 15/253,686 filed Aug. 31, 2016, which is a continuation-in part of U.S. patent application Ser. No. 14/971,450 filed Dec. 16, 2015, now U.S. Pat. No. 9,534,473, by Jeffrey G. Morris, et al. entitled "Mobile Electric Power Generation for Hydraulic Fracturing of Subsurface Geological Formations, which claims the benefit of U.S. Provisional Patent Application No. 62/094,773 filed Dec. 19, 2014, by Jeffrey G. Morris, et al. entitled "Mobile Electric Power Generation and Electrically Powered Hydraulic Fracturing of Underground Formations," all of which are hereby incorporated by reference as if reproduced in their entirety.

BACKGROUND

[0002] Hydraulic fracturing has been commonly used by the oil and gas industry to stimulate production of hydrocarbon wells, such as oil and/or gas wells. Hydraulic fracturing, sometimes called "fracing" or "fracking" is the process of injecting fracturing fluid, which is typically a mixture of water, sand, and chemicals, into the subsurface to fracture the subsurface geological formations and release otherwise encapsulated hydrocarbon reserves. The fracturing fluid is typically pumped into a wellbore at a relatively high pressure sufficient to cause fissures within the underground geological formations. Specifically, once inside the wellbore, the pressurized fracturing fluid is pressure pumped down and then out into the subsurface geological formation to fracture the underground formation. A fluid mixture that may include water, various chemical additives, and proppants (e.g., sand or ceramic materials) can be pumped into the underground formation to fracture and promote the extraction of the hydrocarbon reserves, such as oil and/or gas. For example, the fracturing fluid may comprise a liquid petroleum gas, linear gelled water, gelled water, gelled oil, slick water, slick oil, poly emulsion, foam/emulsion, liquid carbon dioxide (CO_2), nitrogen gas (N_2), and/or binary fluid and acid.

[0003] Implementing large-scale fracturing operations at well sites typically requires extensive investment in equipment, labor, and fuel. For instance, a typical fracturing operation uses a variety of fracturing equipment, numerous personnel to operate and maintain the fracturing equipment, relatively large amounts of fuel to power the fracturing operations, and relatively large volumes of fracturing fluids. As such, planning for fracturing operations is often complex and encompasses a variety of logistical challenges that include minimizing the on-site area or "footprint" of the fracturing operations, providing adequate power and/or fuel to continuously power the fracturing operations, increasing the efficiency of the hydraulic fracturing equipment, and reducing any environmental impact resulting from fracturing operations. Thus, numerous innovations and improvements of existing fracturing technology are needed to address the variety of complex and logistical challenges faced in today's fracturing operations.

SUMMARY

[0004] The following presents a simplified summary of the disclosed subject matter in order to provide a basic understanding of some aspects of the subject matter disclosed herein. This summary is not an exhaustive overview of the technology disclosed herein. It is not intended to identify key or critical elements of the invention or to delineate the scope of the invention. Its sole purpose is to present some concepts in a simplified form as a prelude to the more detailed description that is discussed later.

[0005] A system for pumping and pressurizing fracturing fluid, the system comprising: a mobile transport, an electric prime mover that comprises a shaft and mounted on the mobile transport, a drive line assembly, a fracturing pump mounted on the mobile transport that is coupled to an end of the shaft via the drive line assembly. The drive line assembly comprises an engagement coupling configured to selectively engage and/or disengage the fracturing pump and the electric prime mover, and an engagement panel mounted on the mobile transport and configured to receive a remote command and trigger, in response to the remote command, engagement and/or disengagement of the fracturing pump and the electric prime mover.

[0006] A fracturing pump transport comprising: a first fracturing pump, a second fracturing pump, a dual shaft electric motor that comprises a shaft having a first end and a second end, a first drive line assembly that comprises a first engagement coupling that allows for selective engagement and/or disengagement of the first fracturing pump with the first end of the shaft, a second drive line assembly that comprises a second engagement coupling that allows for selective engagement and/or disengagement of the second fracturing pump with the second end of the shaft, and an engagement panel that allows for selective engagement and/or disengagement at the first engagement coupling, selective engagement and/or disengagement of at the second engagement coupling, or both based on receiving a remote command.

[0007] A method for pumping and pressurizing fracturing fluid, the method comprising: receiving an engagement and/or disengagement command from a location remote to a fracturing pump transport, engaging and/or dis-engaging, in response to receiving the engagement command, a first fracturing pump mounted on the fracturing pump transport with a dual shaft electric prime mover mounted on the fracturing pump transport using a first drive line assembly, wherein the first drive line assembly comprises an engagement coupling that allows for selective engagement between the first fracturing pump and the dual shaft electric prime mover, and driving a second fracturing pump mounted on the fracturing pump transport with the dual shaft electric prime mover after either engaging and/or disengaging the first fracturing pump from the dual shaft electric prime mover using the first drive line assembly.

BRIEF DESCRIPTION OF THE DRAWINGS

[0008] For a more complete understanding of this disclosure, reference is now made to the following brief description, taken in connection with the accompanying drawings and detailed description, wherein like reference numerals represent like parts.

[0009] FIG. **1** is a schematic diagram of an embodiment of a well site, where various embodiments may operate within.

[0010] FIG. **2** is a schematic diagram an embodiment of a well site that includes a mobile source of electricity that comprises three transports for a mobile fracturing system.

[0011] FIG. **3** is a schematic diagram an embodiment of a well site that includes two wellheads and two data vans.

[0012] FIG. **4**A is a schematic diagram of an embodiment of the gas turbine generator transport.

[0013] FIG. **4**B is a schematic diagram of an embodiment of the gas turbine generator transport.

[0014] FIG. **5**A is a schematic diagram of an embodiment of an inlet and exhaust transport.

[0015] FIG. **5**B is a schematic diagram of an embodiment of an inlet and exhaust transport.

[0016] FIG. **5**C is a schematic diagram of an embodiment of an inlet and exhaust transport that includes a sliding air inlet filter housing.

[0017] FIG. **6** is a schematic diagram of an embodiment of the two transport mobile electric power source when in operational mode.

[0018] FIG. **7**A is a schematic diagram of an embodiment of a fracturing pump transport powered by the mobile source of electricity.

[0019] FIG. **7**B is a schematic diagram of an embodiment of a fracturing pump transport powered by the mobile source of electricity.

[0020] FIG. **8**A is a schematic diagram of an embodiment of a blender transport that includes an electric blender.

[0021] FIG. **8**B is a schematic diagram of an embodiment of a blender transport that includes an electric blender.

[0022] FIG. **9**A of an embodiment of a blender transport that includes an electric blender with enclosed mixer hoppers.

[0023] FIG. **9**B of an embodiment of a blender transport that includes an electric blender with enclosed mixer hoppers.

[0024] FIG. **10** is a schematic diagram of an embodiment of a control network system used to monitor, control, and communicate with a variety of control systems located at one or more well sites.

[0025] FIG. **11** is a flow chart of an embodiment of a method to provide a mobile source of electricity for fracturing operations.

[0026] FIG. **12** is a flow chart of an embodiment of a method to pump fracturing fluid into a wellhead.

[0027] FIG. **13** is a schematic diagram of an embodiment of a fracturing pump transport configured to remotely engage and/or disengage one or more pumps from the prime mover.

[0028] FIG. **14**A is a schematic diagram of an embodiment of a drive line assembly that includes an engagement coupling located in an engagement position.

[0029] FIG. **14**B is a schematic diagram of an embodiment of a drive line assembly that includes an engagement coupling located in a disengagement position.

[0030] FIG. **15**A is a schematic diagram of an embodiment of an engagement panel configured to cause remote engagement and/or disengagement of one or more pumps with a prime mover.

[0031] FIG. **15**B is a schematic diagram of an embodiment of a hydraulic control bank located within an engagement panel.

[0032] While certain embodiments will be described in connection with the illustrative embodiments shown herein, the invention is not limited to those embodiments. On the contrary, all alternatives, modifications, and equivalents are included within the spirit and scope of the invention as defined by the claims. In the drawing figures, which are not to scale, the same reference numerals are used throughout the description and in the drawing figures for components and elements having the same structure, and primed reference numerals are used for components and elements having a similar function and construction to those components and elements having the same unprimed reference numerals.

DETAILED DESCRIPTION

[0033] As used herein, the term "transport" refers to any transportation assembly, including, but not limited to, a trailer, truck, skid, and/or barge used to transport relatively heavy structures, such as fracturing equipment.

[0034] As used herein, the term "trailer" refers to a transportation assembly used to transport relatively heavy structures, such as fracturing equipment that can be attached and/or detached from a transportation vehicle used to pull or move the trailer. In one embodiment, the trailer may include the mounts and manifold systems to connect the trailer to other fracturing equipment within a fracturing system or fleet.

[0035] As used herein, the term "lay-down trailer" refers to a trailer that includes two sections with different vertical heights. One of the sections or the upper section is positioned at or above the trailer axles and another section or the lower section is positioned at or below the trailer axles. In one embodiment the main trailer beams of the lay-down trailer may be resting on the ground when in operational mode and/or when uncoupled from a transportation vehicle, such as a tractor.

[0036] As used herein, the term "gas turbine generator" refers to both the gas turbine and the generator sections of a gas-turbine generator transport. The gas turbine generator receives hydrocarbon fuel, such as natural gas, and converts the hydrocarbon fuel into electricity.

[0037] As used herein, the term "inlet plenum" may be interchanged and generally referred to as "inlet", "air intake," and "intake plenum," throughout this disclosure. Additionally, the term "exhaust collector" may be interchanged throughout and generally referred to as "exhaust diffuser" and "exhaust plenum" throughout this disclosure.

[0038] As used herein, the term "gas turbine inlet filter" may be interchanged and generally referred to as "inlet filter" and "inlet filter assembly." The term "air inlet filter housing" may also be interchanged and generally referred to as "filter housing" and "air filter assembly housing" throughout this disclosure. Furthermore, the term "exhaust stack" may also be interchanged and generally referred to as "turbine exhaust stack" throughout this disclosure.

[0039] Various example embodiments are disclosed herein that provide mobile electric fracturing operations for one or more well sites. To provide fracturing operations, a mobile source of electricity may be configured to provide electric power to a variety of fracturing equipment located at the well sites. The mobile source of electricity may be implemented using at least two transports to reduce its "footprint" at a site. One transport, the power generation transport, may comprise a gas turbine and generator along with ancillary equipment that supplies electric power to the well sites. For example, the power generation transport may produce electric power in the ranges of about 15-35 megawatt (MW) when providing electric power to a single well site. A second

transport, the inlet and exhaust transport, may comprise one or more gas turbine inlet air filters and a gas turbine exhaust stack. The power generation transport and the inlet and exhaust transport may be arranged such that the inlet and exhaust are connected at the side of the gas turbine enclosure rather than through the top of the gas turbine enclosure. In one embodiment, the mobile source of electricity may comprise a third supplemental transport, an auxiliary gas turbine generator transport, that provides power to ignite, start, or power on the power generation transport and/or provide ancillary power where peak electric power demand exceeds the electric power output of the gas turbine generator transport. The auxiliary gas turbine generator transport may comprise a smaller gas turbine generator than the one used in the power generation transport (e.g., provides about 1-8 MW of electric power).

[0040] Also disclosed herein are various example embodiments of implementing mobile fracturing operations using a fracturing pump transport that comprises a dual shaft electric motor configured to drive at least two pumps. The dual shaft electric motor may be an electric motor configured to operate within a desired mechanical power range, such as about 1,500 horsepower (HP) to about 10,000 HP. Each of the pumps may be configured to operate within a desired mechanical power range, such as about 1,500 HP to about 5,000 HP, to discharge fracturing fluid at relatively high pressures (e.g., about 10,000 pounds per square inch (PSI)). In one embodiment, the pumps may be plunger-style pumps that comprise one or more plungers to generate the high-pressure fracturing fluid. The fracturing pump transport may mount and couple the dual shaft electric motor to the pumps using sub-assemblies that isolate and allow operators to remove the pumps and/or the dual shaft electric motor individually and without disconnecting the fracturing pump transport from the mobile fracturing system.

[0041] The disclosure also includes various example embodiments of a control network system that monitors and controls one or more hydraulic fracturing equipment remotely. The different fracturing equipment, which include, but are not limited to, a blender, hydration unit, sand handling equipment, chemical additive system, and the mobile source of electricity, may be configured to operate remotely using a network topology, such as an Ethernet ring topology network. The control network system may remove implementing control stations located on and/or in close proximity to the fracturing equipment. Instead, a designated location, such as a data van and/or a remote location away from the vicinity of the fracturing equipment may remotely control the hydraulic fracturing equipment.

[0042] FIG. **1** is a schematic diagram of an embodiment of a well site **100** that comprises a wellhead **101** and a mobile fracturing system **103**. Generally, a mobile fracturing system **103** may perform fracturing operations to complete a well and/or transform a drilled well into a production well. For example, the well site **100** may be a site where operators are in the process of drilling and completing a well. Operators may start the well completion process with vertical drilling, running production casing, and cementing within the wellbore. The operators may also insert a variety of downhole tools into the wellbore and/or as part of a tool string used to drill the wellbore. After the operators drill the well to a certain depth, a horizontal portion of the well may also be drilled and subsequently encased in cement. The operators may be subsequently pack the rig, and a mobile fracturing system **103** may be moved onto the well site **100** to perform fracturing operations that force relatively high pressure fracturing fluid through wellhead **101** into subsurface geological formations to create fissures and cracks within the rock. The fracturing system **103** may be moved off the well site **100** once the operators complete fracturing operations. Typically, fracturing operations for well site **100** may last several days.

[0043] To provide an environmentally cleaner and more transportable fracturing fleet, the mobile fracturing system **103** may comprise a mobile source of electricity **102** configured to generate electricity by converting hydrocarbon fuel, such as natural gas, obtained from one or more other sources (e.g., a producing wellhead) at well site **100**, from a remote offsite location, and/or another relatively convenient location near the mobile source of electricity **102**. Improving mobility of the mobile fracturing system **103** may be beneficial because fracturing operations at a well site typically last for several days and the fracturing equipment is subsequently removed from the well site after completing the fracturing operation. Rather than using fuel that significantly impacts air quality (e.g., diesel fuel) as a source of power and/or receiving electric power from a grid or other type of stationary power generation facility (e.g., located at the well site or offsite), the mobile fracturing system **103** utilizes a mobile source of electricity **102** as a power source that burns cleaner while being transportable along with other fracturing equipment. The generated electricity from the mobile source of electricity **102** may be supplied to fracturing equipment to power fracturing operations at one or more well sites. As shown in FIG. **1**, the mobile source of electricity **102** may be implemented using two transports in order to reduce the well site footprint and the ability for operators to move the mobile source of electricity **102** to different well sites and/or different fracturing jobs. Details regarding implementing the mobile source of electricity **102** are discussed in more detail in FIGS. **4**A-**6**.

[0044] The mobile source of electricity **102** may supply electric power to fracturing equipment within the mobile fracturing system **103** that may include, but is not limited to, at least one switch gear transport **112**, a plurality of drive power transports **104**, at least one auxiliary power transport **106**, at least one blender transport **110**, at least one data van **114** and a plurality of fracturing pump transports **108** that deliver fracturing fluid through wellhead **101** to subsurface geological formations. The switch gear transport **112** may receive the electricity generated from the mobile source of electric power **102** via one or more electrical connections. In one embodiment, the switch gear transport **112** may use 13.8 kilovolts (KV) electrical connections to receive power from the mobile source of electric power **102**. The switch gear transport **112** may comprise a plurality of electrical disconnect switches, fuses, transformers, and/or circuit protectors to protect the fracturing equipment. The switch gear transport **112** may transfer the electricity received from the mobile source of electricity **102** to the drive power transports **104** and auxiliary power transports **106**.

[0045] The auxiliary power transport **106** may comprise a transformer and a control system to control, monitor, and provide power to the electrically connected fracturing equipment. In one embodiment, the auxiliary power transport **106** may receive the 13.8 KV electrical connection and step down the voltage to 4.8 KV, which is provided to other fracturing equipment, such as the fracturing pump transport

108, the blender transport **110**, sand storage and conveyor, hydration equipment, chemical equipment, data van **114**, lighting equipment, and any additional auxiliary equipment used for the fracturing operations. The auxiliary power transport **106** may step down the voltage to 4.8 KV rather than other voltage levels, such as 600 V, in order to reduce cable size for the electrical connections and the amount of cabling used to connect the mobile fracturing system **103**. The control system may be configured to connect to a control network system such that the auxiliary power transport **106** may be monitored and/or controlled from a distant location, such as the data van **114** or some other type of control center.

[0046] The drive power transports **104** may be configured to monitor and control one or more electrical motors located on the fracturing pump transports **108** via a plurality of connections, such as electrical connections (e.g., copper wires), fiber optics, wireless, and/or combinations thereof. The connections are omitted from FIG. **1** for clarity of the drawing. The drive power transports **104** may be part of the control network system, where each of the drive power transports **104** comprise one or more variable frequency drives (VFDs) used to monitor and control the prime movers on the fracturing pump transports **108**. The control network system may communicate with each of the drive power transports **104** to monitor and/or control each of the VFDs. The VFDs may be configured to control the speed and torque of the prime movers by varying the input frequency and voltage to the prime movers. Using FIG. **1** as an example, each of the drive power transports **104** may be configured to drive a plurality of the fracturing pump transports **108**. Other drive power transport to fracturing pump transport ratios may be used as desired. In one embodiment, the drive power transports **104** may comprise air filters and blowers that intake ambient air to cool the VFDs. Other embodiments of the drive power transports **104** may use an air conditioning units and/or water cooling to regulate the temperature of the VFDs.

[0047] The fracturing pump transport **108** may receive the electric power received from the drive power transport **104** to power a prime mover. The prime mover converts electric power to mechanical power for driving one or more pumps. In one embodiment, the prime mover may be a dual shaft electric motor that drives two different pumps. The fracturing pump transport **108** may be arranged such that one pump is coupled to opposite ends of the dual shaft electric motor and avoids coupling the pumps in series. By avoiding coupling the pump in series, the fracturing pump transport **108** may continue to operate when either one of the pumps fails or have been removed from the fracturing pump transport **108**. Additionally, repairs to the pumps may be performed without disconnecting the system manifolds that connect the fracturing pump transport **108** to other fracturing equipment within the mobile fracturing system **103** and wellhead **101**. Details regarding implementing the fracturing pump transport **108** are discussed in more detail in FIGS. **7**A-**7**B.

[0048] The blender transport **110** may receive the electric power fed through the auxiliary power transport **106** to power a plurality of electric blenders. A plurality of prime movers may drive one or more pumps that pump source fluid and blender additives (e.g., sand) into a blending tub, mix the source fluid and blender additives together to form fracturing fluid, and discharge the fracturing fluid to the fracturing pump transport **108**. In one embodiment, the electric blender may be a dual configuration blender that comprises electric motors for the rotating machinery that are located on a single transport, which is described in more detail in U.S. Patent Application Publication No. 2012/0255734, filed Apr. 6, 2012 by Todd Coli et al. and entitled "Mobile, Modular, Electrically Powered System for use in Fracturing Underground Formations," which is herein incorporated by reference in its entirety. In another embodiment, a plurality of enclosed mixer hoppers may be used to supply the proppants and additives into a plurality of blending tubs. The electric blender that comprises the enclosed mixer hoppers are discussed in more detail in FIGS. **9**A and **9**B.

[0049] The data van **114** may be part of a control network system, where the data van **114** acts as a control center configured to monitor and provide operating instructions in order remotely operate the blender transport **110**, the mobile source of electricity **102**, and fracturing pump transport **108** and/or other fracturing equipment within the mobile fracturing system **103**. For example, the data van **114** may communicate via the control network system with the VFDs located within the drive power transports **104** that operate and monitor the health of the electric motors used to drive the pumps on the fracturing pump transports **108**. In one embodiment, the data van **114** may communicate with the variety of fracturing equipment using a control network system that has a ring topology. A ring topology may reduce the amount of control cabling used for fracturing operations and increase the capacity and speed of data transfers and communication. Details regarding implementing the control network system are discussed in more detail in FIG. **10**.

[0050] Other fracturing equipment shown in FIG. **1**, such as gas conditioning transport, water tanks, chemical storage of chemical additives, hydration unit, sand conveyor, and sandbox storage are known by persons of ordinary skill in the art, and therefore are not discussed in further detail. In one or more embodiments of the mobile fracturing system **103**, one or more of the other fracturing equipment shown in FIG. **1** may be configured to receive power generated from the mobile source of electricity **102**. Additionally, as shown in FIG. **1**, one or more embodiments of the mobile fracturing system **103** may not include the use of a missile that receives low-pressure fluid and releases high-pressure fluid towards the wellhead **101**. The control network system for the mobile fracturing system **103** may remotely synchronizes and/or slaves the electric blender of the blender transport **110** with the electric motors of the fracturing pump transports **108**. Unlike a conventional diesel powered blender, the electric blenders may perform rate changes to the pump rate change mounted on the fracturing pump transports **108**. In other words, if the pumps within the fracturing pump transports **108** perform a rate change increase, the electric blender within a blender transport **110** may also automatically compensate its rate and ancillary equipment, such as the sand conveyor, to accommodate the rate change. Manual commands from an operator may not be used to perform the rate change.

[0051] FIG. **2** is a schematic diagram an embodiment of a well site **200** that includes a mobile source of electricity **204** that comprises three transports for the mobile fracturing system **202**. The mobile fracturing system **202** may be substantially similar to mobile fracturing system **103**, except that mobile fracturing system comprises an auxiliary gas turbine generator transport **206**. The auxiliary gas turbine

generator transport **206** may be configured to provide power to ignite, start, or power on the mobile source of electricity **204** and/or provide ancillary power where peak electric power demand exceeds the electric power output of a gas turbine generator transport. The auxiliary gas turbine generator transport may comprise a smaller, gas turbine or diesel generator that generates less power (e.g., provides about 1-8 MW of electric power) than the one used in the gas turbine generator transport. Additionally or alternatively, the auxiliary gas turbine generator transport **206** may provide testing, standby, peaking, and/or other emergency backup power functionality for the mobile fracturing system **202**.

[0052] FIG. **2** illustrates that the mobile fracturing system **202** arranges and positions the drive power transport **104** and the auxiliary power transport **106** in an orientation that is about parallel to the switch gear transport **112** and the fracturing pump transports **108**. Positioning the drive power transport **104** and the auxiliary power transport **106** in a parallel orientation rather than about a perpendicular orientation as shown in FIG. **1** may be beneficial, for example reducing the foot print of the mobile fracturing system **202**. Moreover, FIG. **2** also illustrates that a fuel source **208**, such as natural gas from a producing wellhead, may be located at the well site and be used by the mobile source of electricity **204** to generate electricity.

[0053] Although FIGS. **1** and **2** illustrate a specific configuration for a mobile fracturing system **103** at a well site **100**, the disclosure is not limited to that application and/or the specific embodiment illustrated in FIGS. **1** and **2**. For instance, embodiments of the present disclosure may include a plurality of wellheads **101**, a plurality of blender transports **110**, and a plurality of auxiliary power transports **106**. Additionally, the mobile source of electricity **102** is not limited for use in a fracturing operation and may be applicable to power other types of equipment and devices not typically used in a fracturing operation. The use and discussion of FIGS. **1** and **2** is only an example to facilitate ease of description and explanation.

[0054] FIG. **3** is a schematic diagram an embodiment of a well site **300** that includes two wellheads **101** and two data vans **114**. The two data vans **114** may be part of the control network system that simultaneously monitors and provides operating instructions to the two different wellheads **101**. An additional blender transport **110** may be added to provide fracturing fluid to fracturing pump transports **108** used to fracture the subsurface geological structure underneath the second wellhead **101**. Although FIG. **3** illustrates that both wellheads **101** are located on the same well site **300**, other embodiments may have the wellheads **101** located at different well sites.

[0055] Mobile Source of Electricity

[0056] The mobile source of electricity may be part of the mobile fracturing system used at a well site as described in FIGS. **1-3**. In other words, the mobile source of electricity may be configured to be transportable to different locations (e.g., different well sites) along with other fracturing equipment (e.g., fracturing pump transports) that are part of the mobile fracturing system and may not be left behind after completing fracturing operations. The mobile source of electricity may include at least two different transports that improve mobility of the dedicated electric power by simplifying and minimizing the operations for the mobilization and de-mobilization process. For example, the mobile source of electricity may improve mobility by enabling a mobilization and de-mobilization time period of about 24 hours. The mobile source of electricity also incorporates a two transport footprint, where the same two transport system may be used for transportation and operation modes. Although FIGS. **4A-6** illustrate embodiments of implementing a mobile source of electricity using two different transports, other embodiments of the mobile source of electricity may mount the gas turbine generator, air inlet filter housing, gas turbine exhaust stack, and other components shown in FIGS. **4A-6** on a different number of transports (e.g., all on one transport or more than two transports). To provide electric power for fracturing operations at one or more locations (e.g., well sites), the mobile source of electricity be designed to unitize and mobilize a gas-turbine and generator adapted to convert hydrocarbon fuel, such as natural gas, into electricity.

[0057] FIGS. **4**A and **4**B are schematic diagrams of an embodiment of the gas turbine generator transport **400**. FIG. **4**A illustrates a side-profile view of the gas turbine generator transport **400** with a turbine enclosure **402** that surrounds components within the gas turbine generator transport **400** and includes cavities for the inlet plenum **404**, exhaust collector **406**, and an enclosure ventilation inlet **418**. FIG. **4**B illustrates a side-profile view of the gas turbine generator transport **400** that depicts the components within the turbine enclosure **402**. As shown in FIG. **4**B, the gas turbine generator transport **400** may comprise the following equipment: (1) an inlet plenum **404**; (2) a gas turbine **407** (e.g., General Electric (GE) **2500**); (3) an exhaust collector **406**; (4) a generator **408**; (5) a generator breaker **410**; and (6) a control system **420**. Other components not shown in FIG. **4**B, but which may also be located on the gas turbine generator transport **400** include a turbine lube oil system, a fire suppression system, and a generator lube oil system.

[0058] The gas turbine generator transport **400** includes the gas turbine **407** to generate mechanical energy (i.e., rotation of a shaft) from a hydrocarbon fuel source, such as natural gas, liquefied natural gas, condensate, and/or other liquid fuels. As shown in FIG. **4**B, the gas turbine shaft is connected to the generator **408** such that the generator **408** converts the supplied mechanical energy from the rotation of the shaft to produce electric power. The gas turbine **407** may be a gas turbine, such as the GE LM2500 family of gas turbines, the Pratt and Whitney FT8 gas turbines, or any other gas turbine that generates enough mechanical power for a generator **408** to power fracturing operations at one or more well sites. The generator **408** may be a Brush BDAX 62-170ER generator or any other generator configured to generate electric power for fracturing operations at one or more well sites. For example, the gas turbine **407** and generator **408** combination within a gas turbine generator transport **400** may generate electric power from a range of at least about 15 megawatt (MW) to about 35 MW. Other types of gas-turbine generators with power ranges greater than about 35 MW or less than about 15 MW may also be used depending on the amount of power needed at the well sites. In one embodiment, to increase mobility of the gas turbine generator transport **400**, the gas turbine **407** may be configured to fit within a dimension of about 14.5 feet long and about four feet in diameter and/or the generator **408** may be configured to fit within a dimension of about 18 feet long and about 7 feet wide.

[0059] The generator **408** may be housed within the turbine enclosure **402** that includes air ventilation fans internal

to the generator **408** that draws air into the air inlet located on the front and/or back of the generator **408** and discharges air out on the sides via the air outlets **414**. Other embodiments may have the air outlets positioned on different locations of the enclosure for the generator **408**. In one embodiment, the air inlet may be inlet louvres and the air outlets may be outlet louvres that protect the generator from the weather elements. A separate generator ventilation stack unit may be mounted on the top of the gas turbine generator transport **400**.

[0060] The turbine enclosure **402** may also comprise gas turbine inlet filter(s) configured to provide ventilation air and combustion air via one or more inlet plenums **404** to the gas turbine **407**. Additionally, enclosure ventilation inlets **418** may be added to increase the amount of ventilation air. The ventilation air may be air used to cool the gas turbine **407** and ventilate the gas turbine enclosure **402**. The combustion air may be the air that is supplied to the gas turbine **407** to aid in the production of the mechanical energy. The inlet plenum **404** may be configured to collect the intake air from the gas turbine inlet filter and supply the intake air to the gas turbine. The exhaust collector **406** may be configured to collect the air exhaust from the gas turbine and supply the exhaust air to the gas turbine exhaust stack.

[0061] To improve mobility of the gas turbine generator transport **400**, the air inlet filter housing and the gas turbine exhaust stack are configured to be connected from at least one of the sides of the turbine enclosure **402**, as opposed to connecting both the air inlet filter housing and the gas turbine exhaust stack on the top of the turbine enclosure **402** or connecting the air inlet filter housing at one end of the gas turbine generator transport **400** and connecting the exhaust collector from the side of the turbine enclosure **402**. The air inlet filter housing and gas turbine exhaust stack from the inlet and exhaust transport may connect with the turbine enclosure **402** using one or more expansion connections that extend from one or both of the transports, located at the sides of the turbine enclosure **402**. Any form of connection may be used that provides coupling between the turbine enclosure **402** and the air inlet filter housing and gas turbine exhaust stack without using a crane, forklift, and/or any other external mechanical means to connect the expansion connections in place and/or to connect the air inlet filter housing and gas turbine exhaust stack to the side of the turbine enclosure **402**. The expansion connections may comprise a duct and/or an expansion joint to connect the air inlet filter housing and gas turbine exhaust stack to the turbine enclosure **402**. Additionally, the routing of the air inlet filter housing and gas turbine exhaust stack via the sides of the turbine enclosure **402** may provide a complete aerodynamic modeling where the inlet air flow and the exhaust air flow are used to achieve the gas turbine nameplate output rating. The inlet and exhaust transport is discussed in more detail later in FIGS. **5**A and **5**B.

[0062] To improve mobility over a variety of roadways, the gas turbine generator transport **400** in FIGS. **4**A and **4**B may have a maximum height of about 13 feet and 6 inches, a maximum width of about 8 feet and 6 inches, and a maximum length of about 66 feet. Further, the gas turbine generator transport **400** may comprise at least three axles used to support and distribute the weight on the gas turbine generator transport **400**. Other embodiments of the gas turbine generator transport **400** may be transports that exceed three axles depending on the total transport weight. The dimensions and the number of axles may be adjusted to allow for the transport over roadways that typically mandate certain height, length, and weight restrictions.

[0063] In one embodiment, the gas turbine **407** and generator **408** may be mounted to an engineered transport frame **416**, a sub-base, sub-skid, or any other sub-structure used to support the mounting of gas turbine **407** and generator **408**. The single engineered transport frame may be used to align the connections between the gas turbine **407**, the generator **408**, the inlet plenum **404** and the exhaust collector **406** and/or lower the gas turbine and generator by configuring for a flush mount to the single engineered transport frame **416**. The single engineered transport frame **416** may allow for easier alignment and connection of the gas turbine **407** and generator **408** compared to using separate sub-base for the gas turbine **407** and generator **408**. Other embodiments of the gas turbine generator transport **400** may use a plurality of sub-bases, for example, mounting the gas turbine **407** on one sub-base and mounting the generator **408** on another sub-base.

[0064] FIG. **4**B illustrates that the generator breaker **410** and control system **420** may be located on the gas turbine generator transport **400**. The generator breaker **410** may comprise one or more circuit breakers that are configured to protect the generator **408** from current and/or voltage fault conditions. The generator breaker **410** may be a medium voltage (MV) circuit breaker switchboard. In one embodiment, the generator breaker may be about three panels, two for the generator and one for a feeder that protect relays on the circuit breaker. In one embodiment, the generator breaker **410** may be vacuum circuit breaker. The control system **420** may be configured to control, monitor, regulate, and adjust the power output of the gas turbine **407** and generator **408**. For example, the control system **420** may monitor and balance the load produced by the fracturing operations by generating enough electric power to match the load demands. The control system **420** may also be configured to synchronize and communicate with a control network system that allows a data van or other computing systems located in a remote location (e.g., off the well site) to control, monitor, regulate, and adjust power output of the generator **408**. Although FIG. **4**B illustrates that the generator breaker **410** and/or control system **420** may be mounted on the gas turbine generator transport **400**, other embodiments of the mobile source of electricity may mount the generator breaker **410** and/or control system **420** in other locations (e.g. switch gear transport).

[0065] Other equipment that may also be located on the gas turbine generator transport **400**, but are not shown in FIGS. **4**A and **4**B include the turbine lube oil system, gas fuel valves, generator lube oil system, and fire suppression system. The lube oil systems or consoles, which generally refer to both the turbine lube oil system and generator lube oil system within this disclosure, may be configured to provide a generator and turbine lube oil filtering and cooling systems. In one embodiment, the turbine lube oil console area of the transport may also contain the fire suppression system, which may comprise sprinklers, water mist, clean agent, foam sprinkler, carbon dioxide, and/or other equipment used to suppress a fire or provide fire protection for the gas turbine **407**. The mounting of the turbine lube oil consoles and the fire suppression system onto the gas turbine generator transport **400** reduces this transport's footprint by eliminating the need for an auxiliary transport and connec-

tions for the turbine and generator lube oil, filtering, cooling systems and the fire suppression system to the gas turbine generator transport. The turbine and generator lube oil systems may be mounted on a skid that is located underneath the generator **408** or any other location on the gas turbine generator transport **400**.

[0066] FIGS. **5**A and **5**B are schematic diagrams of embodiments of an inlet and exhaust transport **500**. Specifically, FIG. **5**A depicts the inlet and exhaust transport **500** while in transportation mode and FIG. **5**B depicts the inlet and exhaust transport **500** while in operational mode. As shown in FIGS. **5**A and **5**B, the inlet and exhaust transports **500** include an air inlet filter housing **502** and a gas turbine exhaust stack **504**. Although not shown in FIGS. **5**A and **5**B, one or more gas turbine inlet filters and ventilation fans may be located within or housed in the air inlet filter housing **302**.

[0067] FIGS. **5**A and **5**B illustrate that the air inlet filter housing **502** may be mounted on the inlet and exhaust transport **500** at a fixed location. Other embodiments of the inlet and exhaust transport **500** may mount the air inlet filter housing **502** with a configuration such that the air inlet filter housing **502** may slide in one or more directions when transitioning between operational mode and transportation mode. For example, as shown in FIG. **5**C, the air inlet filter housing **502** may slide out for operational mode and slide back for transport mode. Sliding the air inlet filter housing **502** may be used to align the air inlet filter housing **502** with the inlet plenum of the gas turbine enclosure mounted on the gas turbine generator transport. In another embodiment, the air inlet filter housing **502** may be mounted on a turntable with the ability to engage the inlet plenum of the gas turbine enclosure mounted on the gas turbine generator transport. The air inlet filter housing **502** may comprise a plurality of silencers that reduce noise. The different embodiments for mounting the air inlet filter housing **502** may depend on the amount of clean air and the air flow dynamics needed to supply the gas turbine for combustion.

[0068] The gas turbine exhaust stack **504** may comprise the gas turbine exhaust **508**, an exhaust extension **506** configured for noise control, and an exhaust end connector **510**. The exhaust extension **506** may comprise a plurality of silencers that reduce noise from the inlet and exhaust transport **500**. As shown in FIG. **5**A, the gas turbine exhaust stack **504** may be mounted to initially lie on its side during transportation mode. In operational mode, the gas turbine exhaust stack **504** may be rotated up without using external mechanical means such that the gas turbine exhaust stack **504** is mounted to the inlet and exhaust transport **500** on its base and in the upright position. In operational mode, the gas turbine exhaust stack **504** may be positioned using hydraulics, pneumatics, and/or electric motors such that it aligns and connects with the exhaust end connector **510** and exhaust collector of the gas turbine enclosure shown in FIGS. **4**A and **4**B.

[0069] The exhaust end connector **510** may be adjusted to accommodate and align the gas turbine exhaust stack **504** with the exhaust collector of the gas turbine enclosure. In operational mode, the exhaust end connector **510** may move forward in a side direction, which is in the direction toward the gas turbine enclosure. The exhaust end connector **510** may move backward in the side direction, which is in the direction away from the gas turbine enclosure, when transitioning to the transportation mode. Other embodiments of the gas turbine exhaust stack **504** may have the gas turbine exhaust **508** and the exhaust end connector **510** connected as a single component such that the exhaust end connector **510** and the gas turbine exhaust stack **504** are rotated together when transitioning between the transportation and operational modes.

[0070] In another embodiment, during transport, the gas turbine exhaust stack **504** may be sectioned into a first section and a second section. For example, the first section may correspond to the gas turbine exhaust **508** and the second section may correspond to the exhaust extension **506**. The first section of the gas turbine exhaust stack **508** may be in the upright position and the second section of the gas turbine exhaust stack **506** may be mounted adjacent to the first section of the gas turbine exhaust for transport. The first section and the second section may be hinged together such that the second section may be rotated up to stack on top of the first section for operation. In another embodiment, the gas turbine exhaust stack **504** may be configured such that the entire gas turbine exhaust stack **504** may be lowered or raised while mounted on the inlet and exhaust transport **500**.

[0071] Typically, the air inlet filter housing **502** and gas turbine exhaust stack **504** may be transported on separate transports and subsequently crane lifted onto the top of gas turbine enclosure and mounted on the gas turbine generator transport during operation mode. The separate transports to carry the air inlet filter housing **502** and gas turbine exhaust stack **504** may not be used during operational mode. However, by adapting the air inlet filter housing **502** and gas turbine exhaust stack **504** to be mounted on a single transport and to connect to at least one of the sides of the gas turbine enclosure mounted on the gas turbine generator transport, the inlet and exhaust transport may be positioned alongside the gas turbine generator transport and subsequently connect the air inlet and exhaust plenums for operations. The result is having a relatively quick rig-up and/or rig-down that eliminates the use of heavy lift cranes, forklifts, and/or any other external mechanical means at the operational site.

[0072] FIG. **6** is a schematic diagram of an embodiment of the two transport mobile electric power source **600** when in operational mode. FIG. **6** illustrates a top-down-view of the coupling between the inlet and exhaust transport **500** and the gas turbine transport **400** during operational mode. The exhaust expansion connection **602** may move and connect (e.g., using hydraulics) to the exhaust end connector **510** without using external mechanical means in order to connect the gas turbine exhaust stack of the inlet and exhaust transport with the exhaust collector of the gas turbine generator transport. The inlet expansion connections **604** may move and connect the air inlet filter housing of the inlet and exhaust transport and the inlet plenum of the gas turbine generator transport. The two transports **400** and **500** may be parked at a predetermined orientation and distance such that the exhaust expansion connection **602** and inlet expansion connections **604** are able to connect the two transports **400** and **500**.

[0073] In one embodiment, to adjust the positioning, alignment, and distance in order to connect the two transports **400** and **500**, each of the transports **400** and **500** may include a hydraulic walking system. For example, the hydraulic walking system may move and align transport **500** into a position without attaching the two transports **400** and **500** to transportation vehicles (e.g., a tractor or other type of

motor vehicle). Using FIGS. **4** and **5** as an example, the hydraulic walking system may comprise a plurality of outriggers and/or support feet **412** used to move transport **400** and/or transport **500** back and forth and/or sideways. At each outrigger and/or support feet **412**, the hydraulic walking system may comprise a first hydraulic cylinder that lifts the transport and a second hydraulic cylinder that moves the transport in the designated orientation or direction. A hydraulic walking system on the transport increases mobility by reducing the precision needed when parking the two transports next to each other.

[0074] FIG. **11** is a flow chart of an embodiment of a method **1100** to provide a mobile source of electricity for fracturing operations. Method **1100** may start at block **1102** by transporting a mobile source of electricity with other fracturing equipment to a well site that comprises a non-producing well. Method **1100** may then move to block **1104** and convert the mobile source of electricity from transportation mode to operational mode. The same transports may be used during the conversation from transportation mode to operational mode. In other words, transports are not added and/or removed when setting up the mobile source of electricity for operational mode. Additionally, method **1100** be performed without the use of a forklift, crane, and/or other external mechanical means to transition the mobile source of electricity into operational mode. The conversion process for a two transport trailer is described in more detail in FIGS. **4**A-**6**.

[0075] Method **1100** may then move to block **1106** and generate electricity using the mobile source of electricity to power fracturing operations at one or more well sites. In one embodiment, method **1100** may generate electricity by converting hydrocarbon fuel into electricity using a gas turbine generator. Method **1100** may then move to block **1108** and convert the mobile source of electricity from operational mode to transportation mode. Similar to block **1104**, the conversion process for block **1108** may use the same transports without using a forklift, crane, and/or other external mechanical means to transition the mobile source of electricity back to transportation mode. Method **1100** may then move to block **1110** to remove the mobile source of electricity along with other fracturing equipment from the well site once fracturing operations are completed.

[0076] Fracturing Pump Transport

[0077] FIGS. **7**A and **7**B are schematic diagrams of embodiments of a fracturing pump transport **700** powered by the mobile source of electricity as described in FIGS. **4**A-**6**. The fracturing pump transport **700** may include a prime mover **704** powering two separate pumps **702**A and **702**B. By combining a single prime mover **704** attached to two separate pumps **702**A and **702**B on a transport, a fracturing operation may reduce the amount of pump transports, prime movers, variable frequency drives (VFD's), ground iron, suction hoses, and/or manifold transports. Although FIGS. **7**A and **7**B illustrates that the fracturing pump transport **700** supports a single prime mover **704** power two separate pumps **702**A and **702**B, other embodiments of the fracturing pump transport **700** may include a plurality of prime movers **704** that each power the pumps **702**A and **702**B.

[0078] A "lay-down" trailer **710** design may provide mobility, improved safety, and enhanced ergonomics for crew members to perform routine maintenance and operations of the pumps as the "lay-down" arrangement positions the pumps lower to the ground as the main trailer beams are resting on the ground for operational mode. As shown in FIGS. **7**A and **7**B, the "lay-down" trailer **710** has an upper section above the trailer axles that could hold or have mounted the fracturing pump trailer power and control systems **708**. The fracturing pump trailer power and control system **708** may comprise one or more electric drives, transformers, controls (e.g., a programmable logic controller (PLC) located on the fracturing pump transport **700**), and cables for connection to the drive power trailers and/or a separate electric pumper system. The electric drives may provide control, monitoring, and reliability functionality, such as preventing damage to a grounded or shorted prime mover **704** and/or preventing overheating of components (e.g., semiconductor chips) within the electric drives. The lower section, which may be positioned lower than the trailer axles, may hold or have mounted the prime mover **704** and the pumps **702**A and **702**B attached on opposite sides of each other.

[0079] In one embodiment, the prime mover **704** may be a dual shaft electric motor that has a motor shaft that protrudes on opposite sides of the electric motor. The dual shaft electric motor may be any desired type of alternating current (AC) or direct current (DC) motor. In one embodiment, the dual shaft electric motor may be an induction motor and in another embodiment the dual shaft electric motor may be a permanent magnet motor. Other embodiments of the prime mover **704** may include other electric motors that are configured to provide about 5,000 HP or more. For example, the dual shaft electric motor may deliver motor power in a range from about 1,500 HP to about 10,000 HP. Specific to some embodiments, the dual shaft electric motor may be about a 5,000 HP rated electric motor or about a 10,000 HP electric motor. The prime mover **704** may be driven by at least one variable frequency drive that is rated to a maximum of about 5,000 HP and may receive electric power generated from the mobile source of electric power.

[0080] As shown in FIGS. **7**A and **7**B, one side of the prime mover **704** drives one pump **702**A and the opposite side of the prime mover **704** drives a second pump **702**B. The pumps **702**A and **702**B are not configured in a series configuration in relation to the prime mover **704**. In other words, the prime mover **704** independently drives each pump **702**A and **702**B such that if one pump fails, it can be disconnected and the other pump can continue to operate. The prime mover **704**, which could be a dual shaft electric motor, eliminates the use of diesel engines and transmissions. Moreover, using a dual shaft electric motor on a transport may prevent dissonance or feedback when transferring power to the pumps. In one embodiment, the prime mover **704** may be configured to deliver at least about 5,000 HP distributed between the two pumps **702**A and **702**B. For instance, prime mover **704**, which may be a dual shaft electric motor, may provide about 2,500 HP to one of the pumps **702**A and about 2,500 HP to the other pump **702**B in order to deliver a total of about 5,000 HP. Other embodiments may have the prime mover **704** deliver less than 5,000 HP or more than 5,000 HP. For example, the prime mover **704** may deliver a total of about 3,000 HP by delivering about 1,500 HP to one of the pumps and about 1,500 HP to the other pump. Another example may have the prime mover **704** deliver a total of about 10,000 HP by delivering about 5,000 HP to one of the pumps **702**A and about 5,000 HP to another pump **702**B. Specifically, in one or more embodiments, the prime mover **704** may operate at HP ratings of

about 3,000 HP, 3,500 HP, 4,000 HP, 4,500 HP, 5,000 HP, 5,200 HP, 5,400 HP, 6,000 HP, 7,000 HP, 8,000 HP, 9,000 HP, and/or 10,000 HP.

[0081] The fracturing pump transport **700** may reduce the footprint of fracturing equipment on a well-site by placing two pumps **702**A and **702**B on a single transport. Larger pumps may be coupled to a dual shaft electric motor that operates with larger horse power to produce additional equipment footprint reductions. In one embodiment, each of the pumps **702**A and **702**B may be quintiplex pumps located on a single transport. Other embodiments may include other types of plunger style pumps, such as triplex pumps. The pumps **702**A and **702**B may each operate from a range of about 1,500 HP to about 5,000 HP. Specifically, in one or more embodiments, each of the pumps **702**A and **702**B may operate at HP ratings of about 1,500 HP, 1,750 HP, 2,000 HP, 2,250 HP, 2,500 HP, 2,600 HP, 2,700 HP, 3,000 HP, 3,500 HP, 4,000 HP, 4,500 HP, and/or 5,000 HP. The pumps **702**A and **702**B may not be configured in a series configuration where the prime mover **704** drives a first pump **702**A and the first pump **702**B subsequently drives a second pump **702**B.

[0082] FIG. **7**A also illustrates that each pump **702**A and **702**B, which may also be generally referred to in this disclosure as pump **702**, is mounted on the fracturing pump transport **700** with the same orientation. In particular, each pump **702** is mounted such that the fluid end assembly **716** for each pump **702** is facing the same side of the fracturing pump transport **700**. Additionally, in FIG. **7**A, the power end assembly **718** for each pump **702** is facing the same side of the fracturing pump transport **700**. In other words, for a given pump **702** (e.g., pump **702**A), the fluid end assembly **716** and power end assembly **718** are located on opposite sides of the fracturing pump transport **700**. As shown in FIG. **7**A, both the fluid end assembly **716** and power end assembly **718** of a pump **702** may face sides of the fracturing pump transport **700** that are about orthogonal or perpendicular to the front end **720** and back end **722** of the fracturing pump transport **700**. Having the fluid end side **716** of each pump **702** face the same side of the fracturing pump transport **700** may be beneficial by simplifying and reducing the amount of plumbing used to route both the low pressure fluid line and high pressure fluid line into and out of the fracturing pump transport **700**. For example, if pump **702**A's and **702**B's fluid end assembly **716** are facing opposite sides of the fracturing pump transport **700**, the fracturing pump transport **700** may include plumbing that routes both the low pressure fluid lines and high pressure fluid lines on both sides of the fracturing pump transport **700**. Alternatively, if pump **702**A's and **702**B's fluid end assembly **716** are facing the same side of the fracturing pump transport **700**, at least a majority of the plumbing that routes both the low pressure fluid lines and high pressure fluid lines could be located on one side of the fracturing pump transport **700**.

[0083] In one embodiment, to mount both pumps **702** where the fluid end assemblies **716** are facing the same side of the fracturing pump transport **700**, one of the pumps **702** (e.g., pump **702**B) may be configured with a right-side pinion while the other pump **702** (e.g., pump **702**A) is configured with a pinion located on the opposite side of the pump **702**, which can be referred to as a left-side pinion. In particular, a pump **702** with a right-side pinion may be designated to mount to a specific side of the prime mover **704**, such as the side of the prime mover **704** facing the back end **722** (e.g., the end with trailer axles), and the pump **702** with a left-side pinion may be designated to mount on the other side of the prime mover **704**, such as the side of the prime mover **704** facing the front end **720** (e.g., trailer hitch). Because the pumps **702** are located on opposite sides of the prime mover **704**, placing pinions on different sides of the pumps **702** allows the fluid end assembly **716** for each pump **702** to face the same side of the fracturing pump transport **700**.

[0084] In another embodiment, the fracturing pump transport **700** may include one or more pumps **702** configured with a dual pinion **724**. A pump **702** with the dual pinion configuration would include both a left-side pinion and a right-side pinion. FIG. **7**B illustrates that each pump **702**A and **702**B has a dual pinion **724**, where the two pinion ends are located on opposite sides of each other. Having pumps **702** configured with a dual pinion **724** provides additional flexibility compared to pumps **702** with either a right-side pinion or a left-side pinion. Specifically, a pump **702** with a dual pinion **724** may be able to mount on either side of the prime mover **704** while having the fluid end assembly **716** for each pump **702** face the same side of the fracturing pump transport **700**.

[0085] Another advantage of having the fluid end assemblies **716** face the same side of the fracturing pump transport **700** is to avoid damaging the pump **702** at different loads and/or requiring mounting of a custom fracturing pump. In embodiments where the fluid end assemblies **716** are facing opposite directions, the pinions for pumps **702**A and **702**B may be rotating in opposite directions when driven by the prime mover **704**. A pinion, whether a right-pinion, left-pinion, or a dual pinion **724**, may be located within the power end assembly **718** and includes a pinion shaft and one or more pinion gears configured to generate rotational movement of the power end assembly **718**. The rotational movement may generate torque that moves the plungers in the fluid end assembly **716** used to pump and pressurize fracturing fluid. To produce torque, typically, a pinion gear may interface with a bull gear that drives a crankshaft, which in turn moves the fluid end plungers. The pinion gear and the bull gear are commonly helical gears configured to engage with each other by rotating in a specified direction. If the pinion shaft, pinion gear, and bull gear are rotated in a direction opposite to the designed direction, the pinion gear may turn the bull gear until the pinion gear generates enough torque to break the bull gear and damage the pump **702**. To avoid damaging the pumps **702**, one of the pumps **702** would need to be customized to provide torque when the pinion rotates in a direction opposite of conventional fracturing pumps. Including a customized fracturing pump on the fracturing pump transport **700** could not only lead to an increase in manufacturing cost, but also decrease operational and maintenance flexibility by requiring pumps **702**A and **702**B to be mounted on designated sides of the prime mover **704**.

[0086] The prime mover **704** and each of the pumps **702**A and **702**B may be mounted on sub-assemblies configured to be isolated and allow for individual removal from the fracturing pump transport. In other words, the prime mover **704** and each of the pumps **702**A and **702**B can be removed from service and replaced without shutting down or compromising other portions of the fracturing system. The prime mover **704** and pumps **702**A and **702**B may be connected to each other via couplings that are disconnected when removed from the fracturing pump transport **700**. If the

prime mover **704** needs to be replaced or removed for repair, the prime mover sub-assembly may be detached from the fracturing pump transport **700** without removing the two pumps **702**A and **702**B from the fracturing pump transport. For example, pump **702**A can be isolated from the fracturing pump transport **700**, removed and replaced by a new pump **702**A. If the prime mover **704** and/or the pumps **702**A and **702**B requires service, an operator can isolate the different components from the fluid lines, and unplug, un-pin, and remove the prime mover **704** and/or the pumps **702**A and **702**B from the fracturing pump transport. Furthermore, each pump **702**A and **702**B sub-assembly may be detached and removed from the fracturing pump transport **700** without removal of the other pump and/or the prime mover **704**. As such, the fracturing pump transport **700** may not need to be disconnected from the manifold system and driven out of the location. Instead, replacement prime mover **704** and/or the pumps **702**A and **702**B may be placed backed into the line and reconnected to the fracturing pump transport **700**.

[0087] To implement the independent removal of the sub-assemblies, the two pumps **702**A and **702**B may be coupled to the prime mover **704** using a drive line assembly **706** that is adapted to provide remote operation that engages and/or disengages one or both pumps **702**A and **702**B from the prime mover **704**. The drive line assembly **706** may comprise one or more couplings and one or more drive shafts. For example, the drive line assembly **706** may comprise a fixed coupling that connects to one of the pumps **702**A or **702**B, a keyed shaft **712**, and an engagement coupling (e.g., spline-tooth coupling **714**). The keyed shaft **712** may interconnect the fixed coupling (e.g., a flex coupling or universal joint-based coupling) to a spline-tooth coupling **714** that attaches to the prime mover **704**. The fixed coupling may directly connect the keyed shaft **712** to the pinion of the pump or indirectly connect the keyed shaft **712** to the pinion of the pump using a pump drive shaft. To engage and/or disengage one or both pumps **702**A and **702**B from the prime mover **704**, the spline-tooth coupling **714** may include a splined sliding sleeve coupling and a motor coupling that provides motor shaft alignment with the keyed shaft **712**. Hydraulic fluid and/or mechanical power may be used to adjust the splined sliding sleeve coupling to engage and/or disengage the pumps **702**A and **702**B from the prime mover **704**. Other embodiments of couplings that may be used to engage and/or disengage the keyed shaft **712** from the prime mover **704** may include torque tubes, air clutches, electro-magnetic clutches, hydraulic clutches, and/or other clutches and disconnects that have manual and/or remote operated disconnect devices.

[0088] FIG. **13** is a schematic diagram of an embodiment of a fracturing pump transport **1300** configured to remotely engage and/or disengage one or more pumps **702** from the prime mover **704**. Although FIG. **13** illustrates that the prime mover **704** is a dual-shaft electric motor, other embodiments of the fracturing pump transport **1300** may use other types of electric motors, such an electric motor that has only one shaft extending outward. As shown in FIG. **13**, the fracturing pump transport **1300** may comprise an engagement panel **1302** and a monitoring station **1304**, such as a human monitoring interface (HMI) station. The engagement panel **1302** may include a control system that adjusts an engagement coupling to transition between an engaged and a disengaged position. In one embodiment, the engagement panel **1302** may include levers or switches that an operator may manually operate to engage or disengage the keyed shaft **712** from the motor shaft using the engagement coupling. Additionally or alternatively, the engagement panel **1302** may include electronic controllers that receive instructions from remote locations, such as a monitoring station **1304**, another location at the well site (e.g., data van), and/or off-site to engage and/or disengage the pumps **702** from the prime mover **704**. In response to receiving a remote command, the engagement panel **1302** may trigger the engagement and/or disengagement of one or more of the pumps from the prime mover **704**. For instance, if pump **702**A was disengaged and pump **702**B was engaged, in response to receiving the remote command, the engagement panel **1302** may trigger the engagement of pump **702**A and disengagement of pump **702**B. The remote command may also produce a result where both pumps **702** are disengaged or engaged with the prime mover.

[0089] The engagement panel **1302** may vary its mounting location on the fracturing pump transport **1300** and the control mechanism used to engage and/or disengage the pumps **702** from the prime mover **704**. Although FIG. **13** illustrates the engagement panel **1302** is located at the front end of the fracturing pump transport **1300**, other embodiments could have the engagement panel **1302** located at other locations, such as being part of the trailer power and control systems **708** and/or closer in proximity to the trailer power and control systems **708**. The control mechanism implemented by the engagement panel **1302** may be based on the type of engagement coupling used to engage or disengage the pumps **702** and prime mover **704**. For example, the engagement panel **1302** may be a hydraulic control bank, which is discussed in more detail in FIGS. **15**A and **15**B that include hydraulic controllers (e.g., hydraulic and electronic control valves) that manage hydraulic fluid pressure when the engagement coupling is a splined tooth coupling.

[0090] The monitoring station **1304**, which may be part of the trailer power and control systems **708**, may include hardware and/or software that allow an operator to manage and control (e.g., provide instructions) the engagement panel **1302** to engage and/or disengage the pumps **702** from the prime mover **704**. For example, the monitoring station **1304** may be configured with a safety control system that prevents the execution of engagement and/or disengagement instructions when the prime mover and/or pumps are operational. In one embodiment, the monitoring station **1304** may also include network components for receiving remote engagement or disengagement instructions by connecting to a control network system that communicates with other fracturing equipment and/or control systems. The control network system is described in more detail in FIG. **10**.

[0091] The fracturing pump transport **1300** may also include proximity sensors (not shown in FIG. **13**) used to determine whether the engagement coupling is in an engagement or disengagement position when performing remote monitoring at the monitoring station **1304**, another location at the well site (e.g., data van), and/or off-site. In one embodiment, the proximity sensors may be coupled to the engagement coupling and/or located in close proximity to the engagement coupling to determine whether the pumps **702** are engaged and/or disengaged with the prime mover **704**. Information obtained from the proximity sensors may also be useful in allowing the monitoring station **1304** and/or other control systems that are part of the control network

system (e.g., data van) to determine the number of operating pumps (e.g., none, one, or two) for fracturing pump transport **1300**. An operator and/or control system may use the number of pumps to accurately measure the fluid pumping rate during operations.

[0092] FIGS. **14**A and **14**B are schematic diagrams of an embodiment of a drive line assembly **1400** used to remotely engage and/or disengage a pump from a prime mover. FIG. **14**A illustrates that the engagement coupling **1410** is in an engagement position while FIG. **14**B illustrates that the engagement coupling **1410** is in a disengagement position. When manual and/or remote instructions are sent to move the engagement coupling **1410** into an engaged position, the engagement coupling **1410** may translate the rotational movement from the motor shaft **1408** of the prime mover to the keyed shaft (e.g., a driveline shaft or pump pinion). In a disengaged position, the engagement coupling **1410** disengages the keyed shaft from the motor shaft **1408** of the prime mover such that the rotational movement is not translated to the keyed shaft even though the motor shaft **1408** continues to rotate. For FIGS. **14**A and **14**B, the keyed shaft would be located underneath the shaft cover **1406** used to mount the proximity sensors **1404**A and **1404**B.

[0093] FIGS. **14**A and **14**B also illustrate that the engagement coupling **1410** includes a spline-tooth coupling with a sleeve that moves back in forth using hydraulic cylinders **1402** (e.g., hydraulic rams). When the hydraulic cylinders **1402** move the sleeve in a designated direction (e.g., in the direction of the pump) the spline-tooth coupling may engage the keyed shaft and transfer rotational movement from the motor shaft **1408** to the keyed shaft. When the hydraulic cylinders **1402** move the sleeve an opposite direction (e.g., in the direction of the prime mover), the spline-tooth coupling may disengage the keyed shaft and isolate the rotational movement the motor shaft **1408** generates from the keyed shaft. Other embodiments, may use mechanical power instead of hydraulic power to move the sleeves of the spline-tooth coupling. As shown in FIGS. **14**A and **14**B, the motor shaft **1408** may refer to one end of the dual shaft that protrudes out of the prime mover. Other embodiments could have the motor shaft **1408** be a drive line shaft that is coupled to one end of the dual shaft of the prime mover. In other words, the engagement coupling **1410** may directly or indirectly connect the keyed shaft engagement coupling **1410** to a prime mover.

[0094] The drive line assembly **1400** may also include one or more proximity sensors **1404**A and **1404**B to determine the position of the engagement coupling **1410**, and one or more fixed couplings **1412** used to directly or indirectly couple the keyed shaft with a pump pinion. In FIG. **14**A, the proximity sensor **1404**A may detect when the engagement coupling **1410** is in an engagement position, and in FIG. **14**B, the proximity sensor **1404**B may detect when the engagement coupling **1410** has moved to a disengagement position. FIGS. **14**A and **14**B also depict fixed couplings **1412** that couples the keyed shaft to a pump pinion. The drive line assembly **1400** may vary the number of fixed couplings **1412** and intermediate drive shafts based on space availability, misalignment tolerances, and whether vibrations from the pump need to be deflected to avoid affecting the operation of the prime mover. Additionally, in one or more embodiments, the pump's pinion may move or walk slightly axially (e.g., 1/16ths of an inch). Having fixed couplings **1412** and intermediate drive shafts may allow the pump's pinion shaft to move or walk slightly without damaging the motor shaft and/or bearings of the prime mover. Examples of fixed couplings **1412** may include, but are not limited to, flex couplings and/or universal joint-based coupling.

[0095] Although FIGS. **14**A and **14**B illustrate a specific embodiment of a drive line assembly **1400**, the disclosure is not limited to the specific embodiment illustrated in FIGS. **14**A and **14**B. For instance, engagement coupling **1410** may be implemented using other types of coupling, such as torque tubes, air clutches, electro-magnetic clutches, hydraulic clutches. The type of engagement coupling **1401** may then determine what powers the engagement and/or disengagement operation, such as hydraulic, mechanical, and/or electric power. Additionally, the engagement coupling **1410** may be configured to statically and/or dynamically engage and/or disengage the keyed shaft from the motor shaft **1408**. In a static engagement and/or disengagement, the pumps and/or prime mover may not be operational when engagement or disengagement occurs. For instance, the motor shaft **1408** is not rotating when performing static engagement and/or disengagement. In a dynamic engagement and/or disengagement, the pumps, prime mover and/or motor shaft **1408** are rotating when engagement and/or disengagement occurs. For example, rather than using a spline-tooth coupling, the drive line assembly **1400** may use an air clutch to perform dynamic engagement or disengagement. The use and discussion of FIGS. **14**A and **14**B is only an example to facilitate ease of description and explanation.

[0096] FIG. **15**A is a schematic diagram of an embodiment of an engagement panel **1500** configured to cause remote engagement and/or disengagement of one or more pumps with a prime mover, and FIG. **15**B is a schematic diagram of an embodiment of a hydraulic control bank **1502** located within an engagement panel **1500**. FIG. **15**A illustrates that the engagement panel **1500** includes a hydraulic control bank **1502** with one or more hydraulic levers **1504** that operators may manually operate to trigger engagement and/or disengagement of one or more pumps from a prime mover. As shown in FIG. **15**B, adjusting the hydraulic levers **1504** may activate hydraulic control valves **1506** that adjust hydraulic fluid pressures to move an engagement coupling, such as a spline-tooth coupling, to an engagement and/or disengagement position. The hydraulic control bank **1502** may also include electronic control valves **1508** that adjust hydraulic fluid pressures based on instructions received from a remote location, such as a monitoring station, another location at the well site (e.g., data van), and/or off-site. In one embodiment, the electronic control valves **1508** may include one or more electronic solenoids that adjust the hydraulic fluid pressures to engage and/or disengage one or more pumps from the prime mover. Additionally or alternatively, the engagement panel **1500** may also be configured to prevent engagement and/or disengagement while the motor shaft of the prime mover is rotating (e.g., when an operator attempts to adjust the hydraulic levers and/or remote instructions are received) in instances the engagement coupling is configured to only perform static engagement and/or disengagement.

[0097] FIG. **12** is a flow chart of an embodiment of a method **1200** to pump fracturing fluid into a wellhead. Method **1200** starts at block **1202** and receives electric power to power at least one prime mover. The prime mover may be a dual-shaft electric motor located on a fracturing

pump transport as shown in FIGS. **7**A and **7**B. Method **1200** may then move to block **1204** and receive fracturing fluid produced from one or more blenders. In one embodiment, the blenders may be electric blenders that includes enclosed mixer hoppers.

[0098] Method **1200** then moves to block **1206** and drives one or more pumps using the at least one prime mover to pressurize the fracturing fluid. In one embodiment, the pumps may be positioned on opposite sides and may be both driven by a single shaft from the dual-shaft electric motor when the engagement couplings for both pumps are in engagement position. In other words, when two pumps are operating and engaged, method **1200** may drive the two pumps in a parallel configuration instead of a serial configuration. If one of the pumps are removed and/or disengaged, method **1200** may continue to drive the remaining pump. Method **1200** may receive engagement and/or disengagement instructions manually and/or from a remote location to engage and/or disengaged the pumps prior to or while driving the pumps. Method **1200** may then move to block **1208** and pump the pressurized fracturing fluid into a wellhead.

[0099] Blender Transport

[0100] FIGS. **8**A and **8**B are schematic diagrams of an embodiment of a blender transport **800** that includes an electric blender **806**. FIG. **8**A illustrates a top-down view of the blender transport **800** and FIG. **8**B illustrates a side-profile view of the blender transport **800**. The blender transport **800** may be powered by the mobile source of electricity as described in FIGS. **1**-**6**. The electric blender **806** may be a dual configuration blender, as described in U.S. Patent Application Publication 2012/0255734, with a blending capacity of about 240 bpm. The dual configuration blender may comprise electric motors for all rotating machinery and may be mounted on a single transport. The dual configuration blender may have two separate blending units that are configured to be independent and redundant. For example, any one or both the blending units may receive a source fluid via inlet manifolds of the blending units. The source fluid may originate from the same source or different sources. The source fluid may subsequently be blended by any one or both of the blending tub and subsequently discharged out of any one or both outlet manifolds of the blending units. Other embodiments of the blender transport **800** may be single configuration blender that includes a single blending unit.

[0101] FIGS. **8**A and **8**B illustrate a "lay-down" trailer **802** design that provides mobility and improves ergonomics for the crew members that perform routine maintenance and operations of the electric blender **806** as the "lay-down" positions the blender tubs, pumps and piping lower to the ground level and the main trailer beams are resting on the ground for operational mode.

[0102] Similar to the "lay-down" trailer **710**, the "lay-down" trailer **802** may comprise an upper section above the trailer axles and a lower section below the trailer axles. In one embodiment, the electric blender **806** and associated equipment on the trailer may be controlled and monitored remotely via a control system network. As shown in FIGS. **8**A and **8**B, a blender control system **804** that comprises a PLC, transformers and one or more variable frequency drives are mounted on upper section of the blender transport **800**. To provide remote control and monitoring functions, the network may interface and communicate with the PLC (e.g., provide operating instructions), and the PLC may subsequently control one or more variable frequency drives mounted on the blender trailer to drive one or more electric motors of the blender. Operating the blender transport **800** remotely may eliminate equipment operators from being exposed to hazardous environment and avoiding potential exposure concentrated chemicals, silica dust, and rotating machinery. For example, a conventional blender transport typically includes a station for an operator to manually operate the blender. By remotely controlling using the control network and blender control system **804**, the station may be removed from the blender transport **800**. Recall that a data van may act as a hub to provide the remote control and monitoring functions and instructions to the blender control system **804**.

[0103] FIGS. **9**A and **9**B are schematic diagrams of an embodiment of a blender transport **900** that includes an electric blender **902** with enclosed mixer hoppers **904**. FIG. **9**A illustrates a top-down view of the blender transport **900** and FIG. **9**B illustrates a side-profile view of the blender transport **900**. The electric blender **902** is substantially similar to the electric blender **806** except that the electric blender **902** uses enclosed mixer hoppers **904** to add proppants and additives to the blending tub. FIGS. **9**A and **9**B illustrate that the electric blender **902** is a dual configuration blender that includes two enclosed mixer hoppers **904** powered by two electric motors, where each of the electric motors may operate an enclosed mixer hopper **904**.

[0104] Blenders that comprises open hoppers and augers typically have the proppants (e.g., sand) and/or additives exposed to the weather elements. In situations where precipitation occurs at the well site, operators may cover the open hoppers and augers with drapes, tarps, and/or other coverings to prevent the precipitation from contaminating the proppants and/or additives. The enclosed mixer hopper **904** replaces the open hopper and augers typically included in a blender (e.g., electric blender **806** in FIGS. **8**A and **8**B) with enclosed mixer hoppers **904** (FIGS. **9**A and **9**B). By replacing the open hopper and augers with enclosed mixer hoppers **904** the blender transport **900** may have the advantages of dust free volumetric proppant measurement, dust free mixing of proppant and additives, moderate the transport of proppants, perform accurate volumetric measurements, increase proppant transport efficiency with low slip, prevent proppant packing from vibration, produce a consistent volume independent of angle of repose, and meter and blend wet sand. Other advantages include the removal of gearboxes and increasing safety for operators with the enclosed drum.

[0105] Control Network System

[0106] FIG. **10** is a schematic diagram of an embodiment of a control network system **1000** used to monitor, control, and communicate with a variety of control systems located at one or more well sites. FIG. **10** illustrates that the control network system **1000** may be in a ring-topology that interconnects the control center **1002**, blender transports **1004**, chemical additive unit **1006**, hydration unit **1008**, and fracturing pump transports **1012**. A ring topology network may reduce the amount of control cabling used for fracturing operations and increase the capacity and speed of data transfers and communication. Additionally, the ring topology may allow for two way communication and control by the control center **1002** for equipment connected to the control network system **1000**. For example, the control

center may be able to monitor and control the other fracturing equipment **1010** and third party equipment **1014** when added to the control network system **1000**, and for multiple pieces of equipment to communicate with each other. In other network topologies, such as a star or mesh topology, the other fracturing equipment **1010** and third party equipment **1014** may be limited to one way communication where data is transmitted from the fracturing equipment **1010** and/or third party equipment **1014** to the control center **1002**, but not vice versa or between different pieces of equipment.

[0107] In one embodiment, the control network system **1000** may be a network, such as an Ethernet network that connects and communications with the individual control systems for each of the fracturing equipment. The control center **1002** may be configured to monitor, control, and provide operating instructions to the different fracturing equipment. For example, the control center **1002** may communicate with the VFDs located within the drive power transports **104** that operate and monitor the health of the electric motors used to drive the pumps on the fracturing pump transports **108**. In one embodiment, the control center **1002** may be one or more data vans. More data vans may be used when the fracturing operations include fracturing more than two wellheads simultaneously.

[0108] At least one embodiment is disclosed and variations, combinations, and/or modifications of the embodiment(s) and/or features of the embodiment(s) made by a person having ordinary skill in the art are within the scope of the disclosure. Alternative embodiments that result from combining, integrating, and/or omitting features of the embodiment(s) are also within the scope of the disclosure. Where numerical ranges or limitations are expressly stated, such express ranges or limitations may be understood to include iterative ranges or limitations of like magnitude falling within the expressly stated ranges or limitations (e.g., from about 1 to about 10 includes, 2, 3, 4, etc.; greater than 0.10 includes 0.11, 0.12, 0.13, etc.). The use of the term "about" means±10% of the subsequent number, unless otherwise stated.

[0109] Use of the term "optionally" with respect to any element of a claim means that the element is required, or alternatively, the element is not required, both alternatives being within the scope of the claim. Use of broader terms such as comprises, includes, and having may be understood to provide support for narrower terms such as consisting of, consisting essentially of, and comprised substantially of. Accordingly, the scope of protection is not limited by the description set out above but is defined by the claims that follow, that scope including all equivalents of the subject matter of the claims. Each and every claim is incorporated as further disclosure into the specification and the claims are embodiment(s) of the present disclosure.

[0110] While several embodiments have been provided in the present disclosure, it should be understood that the disclosed systems and methods might be embodied in many other specific forms without departing from the spirit or scope of the present disclosure. The present examples are to be considered as illustrative and not restrictive, and the intention is not to be limited to the details given herein. For example, the various elements or components may be combined or integrated in another system or certain features may be omitted, or not implemented.

[0111] In addition, techniques, systems, subsystems, and methods described and illustrated in the various embodiments as discrete or separate may be combined or integrated with other systems, modules, techniques, or methods without departing from the scope of the present disclosure. Other items shown or discussed as coupled or directly coupled or communicating with each other may be indirectly coupled or communicating through some interface, device, or intermediate component whether electrically, mechanically, or otherwise.

What is claimed is:

1. A system for pumping and pressurizing fracturing fluid, comprising:
- a mobile transport;
- an electric prime mover mounted on the mobile transport;
- a fracturing pump mounted on the mobile transport;
- an engagement panel comprising:
  - an electronic controller configured to receive a remote command via a control network from a location remote to the engagement panel, wherein the remote command comprises instructions that trigger disengaging the fracturing pump from the electric prime mover; and
  - an electronic control valve configured to adjust a hydraulic fluid pressure to disengage the fracturing pump from the electric prime mover based on receiving the remote command; and
- a drive line assembly comprising an engagement coupling configured to disengage the fracturing pump and a shaft of the electric prime mover based on the adjusted hydraulic fluid pressure.

2. The system of claim **1**, wherein the shaft comprises a first end and a second end that are located on opposites sides of the electric prime mover, and wherein the engagement coupling is configured to selectively disengage the fracturing pump from the first end of the shaft.

3. The system of claim **2**, further comprising a second fracturing pump mounted on the mobile transport and a second drive line assembly comprising a second engagement coupling configured to selectively disengage the second fracturing pump from the second end of the shaft.

4. The system of claim **1**, further comprising a hydraulic actuator coupled to the engagement coupling and the engagement panel, wherein the hydraulic actuator is configured to move the engagement coupling to disengage the fracturing pump and the shaft of the electric prime mover based on the adjusted hydraulic fluid pressure.

5. The system of claim **1**, wherein the engagement panel comprises a hydraulic control bank that couples a hydraulic lever to the electronic control valve.

6. The system of claim **1**, further comprising a monitoring station mounted on the mobile transport and configured to receive the remote command from the control network and transmit the remote command to the engagement panel.

7. The system of claim **1**, wherein the engagement coupling comprises a clutch configured to selectively disengage when the shaft is rotating.

8. The system of claim **1**, wherein the engagement coupling comprises a spline-tooth coupling configured to selectively disengage after the shaft stops rotating.

9. The system of claim **1**, wherein the fracturing pump comprises a pinion shaft with a first pinion end and a second pinion end that protrude on opposite sides of the fracturing pump.

10. The system of claim **1**, further comprising a second fracturing pump mounted on the mobile transport such that the fracturing pump and the second fracturing pump are located on opposite sides of the electric prime mover, wherein the fracturing pump and the second fracturing pump each comprise a fluid end assembly, and wherein the fluid end assembly of the fracturing pump and the second fracturing pump face a same side of the mobile transport.

11. A fracturing pump transport comprising:

a first fracturing pump comprising a first fluid end assembly;

a second fracturing pump comprising a second fluid end assembly, wherein the first fluid end assembly and the second fluid end assembly face a same side of the fracturing pump transport;

an electric motor comprising a shaft having a first end and a second end that axially extend on opposite sides of the electric motor;

a first drive line assembly coupling the first fracturing pump to the first end of the shaft, wherein the first drive line assembly comprises a first engagement coupling that allows for selective engagement, disengagement, or both of the first fracturing pump with the first end of the shaft; and

a second drive line assembly coupling the second fracturing pump to the second end of the shaft, wherein the second drive line assembly comprises a second engagement coupling that allows for selective engagement, disengagement, or both of the second fracturing pump with the second end of the shaft.

12. The fracturing pump transport of claim **11**, further comprising an engagement panel comprising a control valve that allows for adjusting a hydraulic fluid pressure to disengage the first fracturing pump from the electric motor with the first engagement coupling based on receiving a remote command from a control network.

13. The fracturing pump transport of claim **12**, further comprising a hydraulic actuator coupled to the first engagement coupling and the engagement panel, wherein the hydraulic actuator is able to move the first engagement coupling to disengage the first fracturing pump and the first end of the shaft based on the adjusted hydraulic fluid pressure.

14. The fracturing pump transport of claim **11**, wherein the engagement coupling comprises a clutch or a spline-tooth coupling that allows for selective engagement, disengagement, or both.

15. The fracturing pump transport of claim **11**, wherein the first fracturing pump comprises a pinion shaft with a first pinion end and a second pinion end that protrudes on opposite sides of the fracturing pump.

16. The fracturing pump transport of claim **12**, wherein the engagement panel comprises a hydraulic control bank that couples a hydraulic lever to the control valve.

17. A method for pumping and pressurizing fracturing fluid, the method comprising:

receiving, at an electronic controller of an engagement panel, a disengagement command from a location remote to a fracturing pump transport;

adjusting, using an electronic valve of the engagement panel and in response to receiving the disengagement command, a hydraulic fluid pressure to disengage a first fracturing pump mounted on the fracturing pump transport from an electric prime mover mounted on the fracturing pump transport;

disengaging, in response to adjusting the hydraulic fluid pressure, the first fracturing pump from the electric prime mover using an engagement coupling, wherein the engagement coupling is part of a first drive line assembly that allows for selective engagement between the first fracturing pump and the electric prime mover; and

driving a second fracturing pump mounted on the fracturing pump transport with the electric prime mover after disengaging the first fracturing pump from the electric prime mover using the first drive line assembly.

18. The method of claim **17**, further comprising:

receiving, at the electronic controller of the engagement panel, a second disengagement command from the location remote to the fracturing pump transport;

adjusting, using a second electronic valve of the engagement panel and in response to receiving the second disengagement command, a second hydraulic fluid pressure to disengage the second fracturing pump mounted on the fracturing pump transport from the electric prime mover mounted on the fracturing pump transport; and

disengaging, in response to adjusting the second hydraulic fluid pressure, the second fracturing pump with the electric prime mover using a second engagement coupling, wherein the second engagement coupling is part of a second drive line assembly that allows for selective engagement between the second fracturing pump and the dual shaft electric prime mover.

19. The method of claim **18**, wherein the disengaging of the second fracturing pump with the electric prime mover occurs after the electric prime mover stops driving the second fracturing pump.

20. The method of claim **17**, wherein the first fracturing pump and the second fracturing pump are mounted on opposite sides of the electric prime mover, and wherein the first fracturing pump and the second fracturing pump each comprise a fluid end assembly that faces a same side of the fracturing pump transport.

* * * * *