United States District Court
Southern District of Texas
ENTERED
May 30, 2025
Nathan Ochsner, Clerk

UNITED STATES DISTRICT COURT
SOUTHERN DISTRICT OF TEXAS
HOUSTON DIVISION

U.S. WELL SERVICES, LLC	§	
U.S. WELL SERVICES, LLC, PROFRAC	§	
MANUFACTURING, LLC, PROFRAC	§	
SERVICES, LLC,	§	
Plaintiffs,	§	
	§	
v.	§	CIVIL ACTION NO. 4:24-CV-00839
	§	
LIBERTY ENERGY, INC., LIBERTY	§	
OILFIELD SERVICES LLC, LIBERTY	§	
ADVANCED EQUIPMENT	§	
TECHNOLOGIES LLC, ST9 GAS AND OIL	§	
LLC, ST9, INC. CHRIS BUCKLEY, AND	§	
PAUL LIGHTFOOT,	§	
Defendants.	§	

MEMORANDUM AND ORDER

On April 30, 2025, the Court held an on the record hearing pursuant to *Markman v. Westview Instruments Inc.*, 517 U.S. 370 (1996) (the "Markman Hearing").[1] During the Markman Hearing, the parties presented arguments in support of their proposed constructions of the disputed terms in Unites States Patent Nos. 10,598,258 (the "'258 Patent"), 11,959,533 (the "'533 Patent"), 10,655,435 (the "'435 Patent"), and 11,208,878 (the "'878 Patent") (collectively the "Asserted

[1] The District Judge referred this case to the undersigned Magistrate Judge pursuant to 28 U.S.C. § 636(b)(1)(A) and (B), the Cost and Delay Reduction Plan under the Civil Justice Reform Act, and Federal Rule of Civil Procedure 72. ECF 71.

Patents”).[2] After considering the parties’ briefing and arguments made during the Markman Hearing, the Court now construes the disputed terms below.[3]

I. Factual and Procedural Background.

U.S. Well Services, LLC (“USWS”) owns the Asserted Patents, which relate to systems and methods for performing hydraulic fracturing operations. USWS sued Liberty Energy, Inc., Liberty Oilfield Services, LCC, Liberty Advanced Equipment Technologies, LLC, (collectively “Liberty”), ST9 Gas and Oil LLC, and ST9, Inc. (collectively “ST9”) (collectively “Defendants”) for breach of contract, trade secret misappropriation, and patent infringement. ECF 56 at ¶ 1.

A. The ‘258 Patent.

The ’258 Patent is titled “Multi-Plunger Pumps and Associated Drive Systems.” ECF 69-1 at 2. The abstract of the ‘258 Patent states the following:

> A hydraulic fracturing system for fracturing a subterranean formation is described according to various embodiments. In an embodiment, the system can include a multi–plunger hydraulic fracturing pump fluidly connected to a well associated with the subterranean formation, the multi–plunger pump configured to pump fluid into a wellbore associated with the well at a high pressure so that the fluid passes from the wellbore into the subterranean formation and fractures the subterranean formation. In an embodiment, a plurality of motors can be positioned to power the multi-plunger pump, and a planetary gear train can have a plurality of pinion gears in rotational contact with each of the plurality of motors. In an embodiment, a gear ratio of the planetary

[2] Additionally, at the hearing, Plaintiffs informed the Court that they are dropping their claims with respect to the ‘992 Patent. Therefore, the Court does not construe the terms “centralized control unit” and “emergency power off unit.”

[3] Claim construction is a non-dispositive, pretrial issue appropriate for an order. *See SciCo Tec GmbH v. Boston Sci. Corp.*, 599 F. Supp. 2d 741, 742 (E.D. Tex. 2009).

> gear train and a speed at which the plurality of motors operates can be selected so as to limit a maximum pump speed associated with the multi-plunger pump.

Id. Claims 1 and 4 of the '258 Patent are representative of the asserted claims and recite the following elements:

> 1. A hydraulic fracturing system for fracturing a subterranean formation comprising:
>
> a multi-plunger hydraulic fracturing pump fluidly connected to a well associated with the subterranean formation, the multi-plunger pump configured to pump fluid into a wellbore associated with the well at a ***high pressure*** so that the fluid passes from the wellbore into the subterranean formation and fractures the subterranean formation;
>
> a plurality of motors simultaneously power the multi-plunger pump; and
>
> a planetary gear train having plurality of ***input pinion gears*** in rotational contact with each of the plurality of motors,
>
> wherein ***a gear ratio of the planetary gear train*** and a speed at which the plurality of motors operates ***are selected*** so as to limit maximum pump speed associated with the multi-plunger pump.
>
> …
>
> 4. The system of claim 1, wherein the maximum pump speed correlates to a ***critical plunger speed*** associated with the multi-plunger hydraulic fracturing pump.

Id. at 21 (9:1–19, 27–29) (emphasis added to disputed terms).

B. The '533 Patent.

The '533 Patent is titled "Multi-Plunger Pumps and Associated Drive Systems." ECF 69-2 at 2. The '533 Patent recites the same abstract as the '258

Patent. *Id.* Claims 10, 19, and 20 of the '533 Patent are representative of the asserted claims and recite the following elements:

> 10. A hydraulic fracturing method comprising:
>
> by operation of a multi-plunger hydraulic fracturing pump of a hydraulic fracturing system, pumping fluid to a wellbore associated with a subterranean formation, the multi-plunger hydraulic fracturing pump comprising a pump crankshaft;
>
> powering the multi-plunger hydraulic fracturing pump with a plurality of motors; and
>
> translating power from the plurality of motors to the multi-plunger hydraulic fracturing pump through planetary gear train, wherein translating power through the planetary gear train comprises translating power through:
>
> a plurality of ***input pinion gears*** that are driven by the plurality of motors; and
>
> a final drive gear that drives the pump crankshaft, wherein the final drive gear is connected to the pump crankshaft by a plurality of ***arms*** extending from the final drive gear.
>
> …
>
> 19. The hydraulic fracturing method of claim 10, comprising limiting a maximum pump speed of the multi-plunger hydraulic fracturing pump, wherein the maximum pump speed is limited by ***a selection of a gear ratio of the planetary gear train*** and a speed at which the plurality of motors operate.
>
> …
>
> 20. The hydraulic fracturing method of claim 19, where in the maximum pump speed correlates with a ***critical plunger speed*** of the multi-plunger hydraulic fracturing pump.

Id. at 48 (9:60–10:11, 48–56) (emphasis added to disputed terms)

C. The '435 Patent.

The '435 Patent is titled "Smart Fracturing System and Method." ECF 69-4 at 2. The abstract of the '435 Patent states the following:

> A hydraulic fracturing system includes a plurality of pumps positioned at a wellsite and configured to pressurize a fracturing fluid, a distribution system fluidly coupled to receive and consolidate fracturing fluid from the plurality of pumps for injection into a wellhead. The hydraulic fracturing system further includes a control system, which includes a plurality of sensing devices configured to measure one or more parameters of the plurality of pumps and the distribution system, one or more processing device configured to receive and analyze the one or more parameters measured by the plurality of sensing devices and generate control instructions based at least in part on the one or more parameters, and one or more control device configured 110 to receive the control instructions and control one or more aspects of the plurality of pumps or the distribution system based on the control instructions.

Id. Claims 1 and 7 of the '435 Patent are representative of the asserted claims and recite the following elements:

> 1. A hydraulic fracturing system, comprising:
>
> a plurality of pumps positioned to a wellsite and configured to pressurize a fracturing fluid;
>
> a distribution system fluidly coupled to receive and consolidate fracturing fluid from the plurality of pumps for injection into the wellhead; and
>
> a control system comprising:
>
> a plurality of sensing devices configured to measure one or more parameters of the plurality of pumps and the distribution system;

one or more processing devices configured to receive a first parameter from a first device of the plurality of pumps, the distribution system, or the wellhead, and transmit the first parameter to a second device of the plurality of the plurality of pumps, the distribution system, or the wellhead, and detect that the first parameter is outside of an acceptable threshold; and generate automated control instructions at the second device based at least in part of the first parameter; and

one or more control devices configured to receive the automated control instructions and automatically adjust one or more aspects of the second device based on the control instructions.

…

7. A hydraulic fracturing method, comprising:

providing a fracturing fluid to a plurality of pumps; pumping the fracturing fluid into a distribution system; injecting the fracturing fluid into a wellhead;

measuring one or more parameters of the plurality of pumps, the distribution system, or the wellhead via a plurality of sensing devices instrumented thereon;

detecting that a first parameter of the one or more parameters outside of an acceptable threshold;

generating automated instructions for one or more control devices based at least in part on the one or more parameters;

automatically adjusting one or more functions of the plurality of pumps, the distribution system, or the wellhead based at least in part on the automated instructions;

transmitting the first parameter from a first device of the plurality of pumps, the distribution system, or the wellhead to a second device of the plurality of the plurality of pumps, the distribution system, or the wellhead;

> ***generating automated instructions at the second device based at least in part on the first parameter; and***
>
> ***automatically adjusting one or more functions of the second device based on the automated instructions.***

Id. at 19–20 (11:65–12:22; 12:56–13:12) (emphasis added to disputed terms).

D. The '878 Patent.

The '878 Patent is titled "Modular Switchgear System and Power Distribution for Electric Oilfield Equipment." ECF 69-5 at 2. The abstract of the '878 Patent states the following:

> A hydraulic fracturing system for fracturing a subterranean formation includes a support structure that includes an electric powered pump, arranged in a first area, the electric powered pump powered by at least one electric motor, also arranged in the first area. The system further includes a variable frequency drive (VFD), arranged in a second area proximate the first area, connected to the at least one electric motor to control the speed of the at least one electric motor. The system includes a transformer, arranged in a third area proximate the second area. The system also includes a cooling system, arranged in a fourth area proximate the third area, the cooling system providing a cooling fluid to the VFD via one or more headers.

Id. Claim 1 of the '878 Patent recites the following elements:

> A hydraulic fracturing system for fracturing a subterranean formation, comprising:
>
> an electric powered pump coupled to a well associated with the subterranean formation and powered by at least one electric motor, the electric powered pump configured to pump fluid into a wellbore associated with the well;
>
> a variable frequency drive (VFD) connected to the at least one electric motor to control the speed of the at least one electric motor;

> a transformer for conditioning power to the electric powered pump, the power being received from at least one generator at a voltage higher than an operating voltage of the electric pump; and
>
> a switchgear, receiving power from at least one generator, configured to distribute power to a plurality of pieces of wellsite equipment, the switchgear having a common load sharing bus and front aligned, shielded cable connections, the switchgear being positioned within an enclosure;
>
> wherein the electric powered pump, the VFD, the switchgear, and the transformer are mounted on a ***common support structure*** and a single cable couples the switchgear to the transformer.

Id. at 32 (16:58–17:14) (emphasis added to disputed terms).

Plaintiffs filed their Claim Construction Brief on January 16, 2025. ECF 69. Defendants filed their Responsive Claim Construction Brief (ECF 73) on January 30, 2025, to which Plaintiffs replied (ECF 75). Prior to the Markman Hearing, the Court entered its proposed, non-binding claim constructions. ECF 94.

II. Legal Standards for Claim Construction.

"The purpose of claim construction is to 'determin[e] the meaning and scope of the patent claims asserted to be infringed.'" *Lemoine v. Mossberg Corp*., 2020-2140, 2021 WL 4199934 at *2 (Fed. Cir. Sept. 15, 2021) (quoting *Markman v. Westview Instruments, Inc*., 52 F.3d 967, 976 (Fed. Cir. 1995)). When construing terms in a claim, courts first consider intrinsic evidence which includes the claims, the specifications, and the prosecution history, if in evidence. *Phillips v. AWH Corp.*, 415 F.3d 1301, 1313-1314 (Fed. Cir. 2005); *C.R. Bard, Inc. v. U.S. Surgical*

Corp., 388 F.3d 868, 861 (Fed. Cir. 2004). "The claim construction inquiry ... begins . . . with the actual words of the claim." *Renishaw PLC v. Marposs Societa' per Azioni*, 158 F.3d 1243, 1248 (Fed. Cir. 1998). Generally, each claim term is construed according to its plain and ordinary meaning as understood by a person of ordinary skill in the art at the time of the invention in the context of the patent. *See Azure Networks, LLC v. CSR PLC*, 771 F.3d 1336, 1347 (Fed. Cir. 2014), *vacated on other grounds*, 135 S. Ct. 1846 (2015) ("There is a heavy presumption that claim terms carry their accustomed meaning in the relevant community at the relevant time."). Further, "claims must be read in view of the specification, of which they are a part." *Id.* (quotation omitted). "[T]he specification is always highly relevant to the claim construction analysis. Usually, it is dispositive; it is the single best guide to the meaning of a disputed term." *Id.* (internal quotation marks and citation omitted).

Although extrinsic evidence can be useful, it is "less significant than the intrinsic record in determining the legally operative meaning of claim language." *C.R. Bard*, 388 F.3d at 862. Technical dictionaries and treatises may help a court understand the underlying technology and the manner in which a person of ordinary skill in the art might use claim terms. *Phillips*, 415 F.3d at 1318. Similarly, expert testimony may aid a court in understanding the underlying technology and determining the particular meaning of a term in the pertinent field, but an expert's

conclusory, unsupported assertions as to a term's definition are entirely unhelpful. *Id.* Generally, extrinsic evidence is "less reliable than the patent and its prosecution history in determining how to read claim terms." *Id.*

Claim construction includes the issue of indefiniteness. A claim is indefinite if it fails to "particularly point out and distinctly claim the subject matter which the applicant regards as [the] invention." *Nautilus Inc. v. Biosig Instruments, Inc.*, 572 U.S. 898, 901 (2014) (quoting 35 U.S.C. §112(b)). The issue of definiteness is evaluated from the perspective of a person of ordinary skill in the art at the time of filing the patent application. *Id.* at 908.

III. Person of Ordinary Skill in the Art.

The parties offer almost identical definitions of a person of ordinary skill in the art. ECF 69-6 at ¶ 38; ECF 69-7 at ¶ 21. Considering those definitions, the Court finds that at the time of the claimed invention, a person of ordinary skill in the art would have either (1) a Bachelor of Science in Mechanical Engineering, Electrical Engineering, Petroleum Engineering or an equivalent field as well as at least two years of academic or industry experience in the oil and gas industry, including hydraulic fracturing, well drilling, completion, or production, or (2) at least four years of industry experience in the oil and gas industry including well drilling, completion, or production.

IV. Agreed Terms.

At the Markman Hearing, Defendants informed the Court that they do not contest the plain and ordinary meaning of the term "critical plunger speed" in the '258 and '533 Patent. **Therefore,** the Court assigns **"critical plunger speed"** its **plain and ordinary meaning.**

V. Claim Construction.

The parties dispute the construction of eight terms. Defendants argue that five of the eight terms are indefinite under § 112(b). In addition to the intrinsic evidence, Plaintiffs support their proposed claim constructions with expert testimony from Mr. Michael R. Chambers, P.E. (ECF 69-6) while Defendants support their proposed claim constructions with testimony from Dr. L. Brun Hilbert, Jr., P.E. (ECF 69-7). The Court construes the disputed terms below.

A. "High pressure" ('258 Patent, claims 1, 11, 15).

No.	Claim Term	Plaintiffs' Proposed Construction	Defendants' Proposed Construction
1	"high pressure" '258 patent, claims 1, 11, 15	Plain and ordinary meaning. No construction needed. Alternatively, "high pressure" means the fluid has been pressurized and discharged out of the fracturing pump	Indefinite Alternatively, "15,000 psi or more"

1. The parties' arguments.

Plaintiffs argue that no construction is needed for the term "high pressure." Plaintiffs contend that a person of ordinary skill in the art would understand the

bounds of "high pressure" because high pressure pumps are distinct from other components of the frac site that are upstream of the frac pump. ECF 75 at 3 ("in every application a Person of ordinary skill in the art would understand the fluid entering the frac pumps is considered 'low pressure' fluid flowing through 'low pressure' equipment, and the fluid discharged from the frac pumps is considered 'high pressure' fluid flowing through 'high pressure' equipment.").

Defendants contend that the '258 Patent specifications fail to provide any objective boundaries for "high pressure," and a person of ordinary skill would need to "make a separate infringement determination for every set of circumstances in which the [invention] may be used." ECF 73 at 14 (quoting *Halliburton Energy Servs., Inc. v. M-I LLC*, 514 F.3d 1244, 1254–55 (Fed. Cir. 2008)). In response to Defendants' argument that "high pressure" is indefinite because the pressure needed to fracture a formation varies from well to well, Plaintiffs cite *Nevro Corp. v. Boston Sci. Corp*. for the proposition that "definiteness does not require that a potential infringer be able to determine ex ante if a particular act infringes on the claims." 955 F.3d 35, 38 (Fed. Cir. 2020).

Defendants also argue the term is indefinite because "high" is a term of degree that provides no objective boundaries to inform a person of ordinary skill in the art about the scope of the invention "with reasonable certainty." ECF 73 at 10 (quoting

Nautilus, 572 U.S. at 910). Alternatively, Defendants propose that "high pressure" be construed as meaning "15,000 psi or more." *Id.* at 16.

Plaintiffs further contend the extrinsic evidence, including the testimony of both experts, demonstrates that a person of ordinary skill in the art would understand the meaning of "high pressure" as used in the claims. Plaintiffs point to industry literature that uses the term "high pressure" to mean hydraulic fracturing fluid exiting the frac pump without the need for any additional explanation. Plaintiffs argue that Defendants' expert, Dr. Hilbert, understands the meaning of "high pressure" without further explanation.

2. The Court's construction.

Claims 1 and 11 in the '258 Patent are system claims for a hydraulic fracturing system comprising:

> A multi-plunger hydraulic fracturing pump fluidly connected to a well associated with the subterranean formation, the multi-plunger pump configured to pump fluid into a wellbore associated with the well at a high pressure so that the fluid passes from the wellbore into the subterranean formation and fractures the subterranean formation . . .

ECF 69-1 at 21. Claim 15 in the '258 patent is a method claim with the method comprising:

> Fluidly connecting a multi-plunger hydraulic fracturing pump to a well associated with the subterranean formation such that the multi-plunger pump pumps fluid into the wellbore at a high pressure so that fluid passes from the wellbore into the subterranean formation and fractures the subterranean formation; …

Id.

To determine whether the term "high pressure" is indefinite, the Court first looks to the words of the claims themselves. *Vitronics Corp. v. Conceptronic, Inc.*, 90 F.3d 1576, 1582 (Fed. Cir. 1996). The term "high pressure" is one of degree "as it necessarily calls for a comparison against some baseline." *Liberty Ammunition, Inc. v. United States*, 835 F.3d 1388, 1396 (Fed. Cir. 2016). Terms of degree are not inherently indefinite. *One-E-Way, Inc. v. Int'l Trade Comm'n*, 859 F.3d 1059, 1068 (Fed. Cir. 2017)). However, "[t]erms of degree will fail for indefiniteness unless they provide objective boundaries for those of skill in the art when read in light of the specification and the prosecution history." *Id.* (internal quotations omitted).

The claim language in the '258 Patent does not provide an objective boundary or baseline that would allow a person of ordinary skill in the art to differentiate between "high pressure" and other types of pressure (i.e., non-high pressure). Similarly, the specifications do not provide any boundaries for the term "high pressure" and fail to clarify the scope of the term. The specifications merely repeat the claim language without any baseline comparison. ECF 69-1 at 2, 17 (2:46–53), 18 (3:30–37, 51–57). Thus, nothing in the claim language or the specifications informs a person of ordinary skill in the art, with reasonable certainty, of the boundaries for the term "high pressure" and the scope of the invention.

Plaintiffs cite to the patents and prosecution history identified on the face of the '258 Patent as intrinsic evidence in support of their argument that "high pressure" is not indefinite and should be given its plain and ordinary meaning. ECF 101; *See Phillips*, 415 F.3d at 1317 ("The prosecution history, which we have designated as part of the 'intrinsic evidence,' consists of the complete record of the proceedings before the PTO and includes the prior art cited during the examination of the patent."). However, as Defendants point out, many of the identified patent documents only compound the lack of reasonable certainty regarding the scope of the term "high pressure." For example, the Lopez Patent Application (US 2016/0102537) recites

> In the illustrated embodiment, each fracturing pump 130 receives the fracturing fluid at a low pressure and discharges it to the high pressure manifold 140 portion of the manifold system 126 at a high pressure, as shown by dashed lines 134 (for example, in various embodiments, the high pressure can be within a range of from about 3,000 psi (20.7 MPa) to about 15,000 psi (103 MPa)).

ECF 101-30 at 24. The Vicknair et al. Patent Application (US 2015/0354322) recites:

> In order to create a large number of fractures needed to extract the hydrocarbons, high pressure and high flow pumps are required to inject the fracturing liquids. For example, the pumps may be required to pump over 70 gallons per second of the liquid at pressures over 15,000 psi and may require over 2000 hp to run at these specifications. In many instances, electric motors may be called upon to operate these types of pumps.

ECF 101-31 at 9. The Morris et. al. Patent Application (US 2019/0203572) recites:

> Each of the pumps may be configured to operate within a desired mechanical power range, such as about 1,500 HP to about 5,000 HP, to discharge fracturing fluid at relatively high pressures (e.g., about 10,000 pounds per square inch (PSI)).

ECF 101-5 at 21. United States Patent No. 8,146,665 (Neal) recites:

> The high-pressure pump 142 increases the pressure of the fluid to a third pressure greater than the second pressure. For example, the high-pressure pump 142 may have a pressure equal to or greater than about 2,000 psi, from about 5,000 psi to about 20,000 psi, or from about 8,000 psi to about 12,000 psi.

ECF 101-89 at 8 (6:56–61). The patent documents discussed above, cited on the face of the '258 Patent, demonstrate that while "high pressure" may be a ubiquitous term in the hydraulic fracturing industry, the meaning of "high pressure" varies. Critically, unlike the '258 Patent, the patent documents cited above provided some objective boundaries as to the scope of "high pressure."[4]

Furthermore, the patent applications cited within the '258 Patent toggle between "relatively high pressure"[5] and "very high levels [of pressure][6]," which

[4] One court in the Southern District of Texas, analyzing similar claim language, determined that "high pressure" was not indefinite. *U.S. Well Servs., LLC v. TOPS Well Servs.*, No. 3:19-CV-00237, 2020 WL 9439469, at *25 (S.D. Tex. Sept. 18, 2020). However, as noted in the court's order, "the intrinsic evidence indicates that 'high pressure' means capable of pumping at 15,000 psi or more." *Id.* Similar intrinsic evidence is absent from the '258 Patent.

[5] The Morris et. al. Patent Application (US 2019/0203572) recites "each of the pumps may be configured to operate within a desired mechanical power range, such as about 1,500 HP to about 5,000 HP, to discharge fracturing fluid at *relatively high pressures* (e.g., about 10,000 pounds per square inch (PSI))." ECF 101-5 at 21 (emphasis added).

[6] The Sanborn et al Patent Application (US 2013/0306322) recites "The pumpers are capable of increasing *the pressure of the fluid to the very high levels* typically needed for fracturing, e.g., usually above about 5,000 psi, and often, about 10,000 psi or higher." ECF 101-53 at 8 (emphasis added).

further underscores the intrinsic evidence's lack of objective boundaries for the term "high pressure." The claims, specifications, and prior art "indicat[e] that there is an indefiniteness problem" because "the claim language might mean several different things and no informed and confident choice is available among the contending definitions." *Interval Licensing LLC v. AOL, Inc.*, 766 F.3d 1364, 1371 (Fed. Cir. 2914) (citing *Nautilus*, 572 U.S. at 911 n.8).

This Court is guided by decisions from other courts, including the Federal Circuit, which have found similar, if not identical, claims indefinite. The court in *U.S. Well Servs., Inc. v. Halliburton Co.* found the term "high pressure" to be indefinite. No. 6:21-CV-00367-ADA, 2022 WL 819548, at *9 (W.D. Tex. Jan. 17, 2022). The claim language at issue in *Halliburton* was similar to that in the '258 Patent:

> A system for hydraulically fracturing an underground formation in an oil or gas well to extract oil or gas from the formation, the oil or gas well having a wellbore that permits passage of fluid from the wellbore into the formation, the system comprising:
>
> a plurality of electric pumps fluidly connected to the well and powered by at least one electric motor, and configured <u>to pump fluid into the wellbore at ***high pressure*** so that the fluid passes from the wellbore into the formation, and fractures the formation</u> …

Id. at *5 (emphasis in original). Plaintiffs raised many of the same arguments against indefiniteness in *Halliburton* as they do here. However, the *Halliburton* court found no objective boundaries for the term within the claims or specifications. *Id.* at *6–7.

Additionally, the court found the patent documents cited on the face of the patent only "compound[ed] the ambiguity" with respect to "high pressure." *Id.* at *8. The court also took issue with Plaintiffs' understanding of "high pressure," which tracks Plaintiff's understanding in this case. The court explained:

> The overarching problem with USWS's understanding of the plain and ordinary meaning of the term is that it completely reads the term "high pressure" out of the claims. USWS argues that "high pressure" refers to the pressure of the fracturing fluid that is pumped into the wellbore by the electric pumps and subsequently into the formation so that the formation is fractured to release the oil or gas trapped in the formation. In other words, USWS's argument is "if it works," then it falls within the scope of the claims. However, this argument is exactly the claim language when the term "high pressure" is removed from the claims. In other words, the claim language reads exactly as USWS's proposed plain and ordinary meaning when the term "high" is removed from the claims.

Id. at *9. Likewise, in this case, Plaintiffs argue the '258 Patent claims reference "hydraulic fracturing pumps configured to perform a hydraulic fracturing operation." ECF 69 at 13. This creates the same "if it works" problem raised in *Halliburton*. In other words, the claims in the '258 Patent read the same with or without the term "high pressure," rendering "high pressure" superfluous. *See Wasica Fin. GmbH v. Cont'l Auto. Sys., Inc.*, 853 F.3d 1272, 1288 n.10 (Fed. Cir. 2017) ("It is highly disfavored to construe terms in a way that renders them void, meaningless, or superfluous.").

More recently, the Federal Circuit took up one of Plaintiffs' claims from a different patent, albeit one with language that is nearly identical to that in the

disputed claims of the '258 Patent. In *U.S. Well Servs., LLC v. Stewart*, the Federal Circuit addressed the following claim:

> A hydraulic fracturing system for fracturing a subterranean formation comprising:
>
> an electric pump fluidly connected to a well associated with the subterranean formation, and configured to pump fluid into a wellbore associated with the well at *a high pressure* so that the fluid passes from the wellbore into the subterranean formation and fractures the subterranean formation; …

No. 2023-1799, 2025 WL 798863, at *1 (Fed. Cir. Mar. 13, 2025) (emphasis in original). The Federal Circuit affirmed the Patent Trial and Appeal Board's ("PTAB") finding that "high pressure" was indefinite. *Id.* at *2. The Federal Circuit concluded that the intrinsic and extrinsic evidence demonstrated that "the specification [] fail[ed] to inform a person of ordinary skill, with reasonable certainty, of the boundaries of 'high pressure' in the context of the invention." *Id.* The Federal Circuit noted the evidence demonstrated that "high pressure" was not uniformly understood within the hydraulic fracturing industry. *See id.* (noting that Plaintiffs' experts expressly disagreed about what psi range falls within "high pressure").

The Court finds the Federal Circuit's opinion in *Stewart* persuasive. The claim language in *Stewart* mirrors the claim language at issue in the '258 Patent.[7] Additionally, as noted above, the intrinsic evidence demonstrates that "high pressure" can mean different ranges of pressure to different persons skilled in the art. As in *Stewart*, the '258 Patent lacks "clear boundaries for how an ordinarily skilled artisan would interpret 'high pressure.'" *Id.*

The intrinsic evidence and persuasive case law demonstrate that "high pressure" does not inform a person skilled in the art, with reasonable certainty, about the meaning of the term "high pressure" and the scope of the invention. Therefore, the Court finds that the term **"high pressure"** is **indefinite**.

[7] *Compare Stewart*, 2025 WL 798863, at *1 (A hydraulic fracturing system for fracturing a subterranean formation comprising: an electric *pump fluidly connected to a well associated with the subterranean formation, and configured to pump fluid into a wellbore associated with the well at a high pressure so that the fluid passes from the wellbore into the subterranean formation and fractures the subterranean formation* …) *with* ECF 69-1 at 21 ("A hydraulic fracturing system for fracturing a subterranean formation comprising: a multi-plunger hydraulic fracturing *pump fluidly connected to a well associated with the subterranean formation*, the multi-plunger *pump configured to pump fluid into a wellbore associated with the well at a high pressure so that the fluid passes from the wellbore into the subterranean formation and fractures the subterranean formation* …) (emphasis added).

B. "A gear ratio of the planetary gear train … [is] selected" ('258 Patent, claims 1, 11) and "a selection of a gear ratio of the planetary gear train" ('533 Patent, claim 19).

No.	Claim Term	Plaintiffs' Proposed Construction	Defendants' Proposed Construction
2	"a gear ratio of the planetary gear train. . . [is] selected" '258 patent, claims 1, 11 "a selection of a gear ratio of the planetary gear train" '533 patent claim 19	Plain and ordinary meaning. No construction needed.	"an operating gear from multiple operating gears of the planetary gear train . . . [is] selected" "a selection of an operating gear from multiple operating gears of the planetary gear train"

1. The parties' arguments

Plaintiffs contend that a person of ordinary skill in the art would understand that "a gear ratio in a planetary gear train is designed to reduce the RPM" and adjust the torque "depending on the ratio of the multiple gears that interface with one another." ECF 69 at 22. Plaintiffs also argue that Defendants' brief misses the mark because the words in dispute are "gear ratio," not "selection"/ "selected." ECF 75 at 6. Further, Plaintiffs contend that Defendants' proposed construction would exclude a disclosed embodiment. *Id.* (citing *Nobel Biocare Servs. AG v. Instradent USA, Inc.*, 903 F.3d 1365, 1381 (Fed. Cir. 2018)). Plaintiffs also point out that Dr. Hilbert did not opine on this term in his declaration.

Defendants argue that Plaintiffs are attempting to read "selection" out of the claim. According to Defendants, the claim requires an affirmative selection of an operating gear, and not merely the design choices made when building the system. Adopting Plaintiffs' proposed construction, Defendants conclude, would render the term meaningless.

2. The Court's construction.

Defendants' proposed construction substitutes "an operating gear from multiple operating gears" for "gear ratio." The remainder of the claim as it appears in the '258 and '533 Patent is unchanged. While Defendants argue that their proposed construction accurately captures what is disclosed in the claims and specifications, the claim language overrides their proposed construction. "The actual words of the claim are the controlling focus." *Digital Biometrics, Inc. v. Identix, Inc.*, 149 F.3d 1335, 1343 (Fed. Cir. 1998). The claims describe a system:

> wherein a gear ratio of the planetary gear train and a speed at which the plurality of motors operates are selected so as to limit maximum pump speed associated with the multi-plunger pump.

ECF 69-1 at 21 (9:16–19).

> …wherein the maximum pump speed is limited by a selection of a gear ratio of the planetary gear train and a speed at which the plurality of motors operate.

ECF 69-2 at 48(10:50–53).

Defendants' proposed construction does not find support in the claim or the specifications. As Plaintiffs correctly note, the specifications do not teach that an operating gear from multiple operating gears must be selected after the gear ratio is determined and the planetary gear train designed. ECF 75 at 6. "The construction that stays true to the claim language and most naturally aligns with the patent's description of the invention will be, in the end, the correct construction." *Phillips*, 415 F.3d at 1316 (quoting *Renishaw*, 158 F.3d at 1250). The plain and ordinary meaning stays true to the claim language.

Moreover, contrary to Defendants' arguments, Dr. Hilbert's testimony supports the conclusion that a person of ordinary skill in the art would understand the gear ratio to be selected in the design of the planetary gear train.[8]

Therefore, the Court construes the words **"a gear ratio of the planetary gear train. . . [is] selected"** and **"a selection of a gear ratio of the planetary gear train"** to have their plain and ordinary meaning.

[8] Q: And you select the gear ratio for a planetary gear train for the desired output when designing the planetary gear train, correct?
A: That's correct. And that is what the '258 and '533 patents are focused on, is designing a planetary gear train for the purpose of developing the necessary speed of the pistons moving back and forth to perform in an efficient manner. ECF 69-10 at 21(75:12–19).

C. "Input pinion gears" ('258 Patent, claims 1, 2, 11, 12, 15, 16; '533 Patent, claims 1, 2, 8, 10, 11, 17, 22).

No.	Claim Term	Plaintiffs' Proposed Construction	Defendants' Proposed Construction
3	"input pinion gears" '258 patent, claims 1, 2, 11, 12, 15, 16 '533 patent claim 1, 2, 8, 10, 11, 17, 22	Plain and ordinary meaning. No construction needed.	"smaller drive gear that meshes with a larger gear"

1. The parties' arguments.

Plaintiffs argue that "input pinion gears" is readily understandable to a person of ordinary skill in the art. Plaintiffs also argue that Dr. Hilbert's testimony supports the plain and ordinary meaning because he states that "a pinion gear is a component of the gear system which translates rotation motion for a motor or other type of gearing system." ECF 69 at 23. Further, Plaintiffs argue that Defendants' proposed construction appears to incorporate limitations from Figure 1 of the '258 Patent (ECF 69-1 at 7), which would impermissibly read limitations from the specifications into the claims. ECF 69 at 23 (citing *Oil States Energy Servs., LLC v. Worldwide Oilfield Mach., Inc.*, No. 4:23-CV-0557, 2024 WL 844916, at *7 (S.D. Tex. Feb. 27, 2024)).

Defendants argue that their proposed construction comports with the plain and ordinary meaning. Defendants contend that Figure 1 in both the '258 Patent and

'533 Patent support their construction. Essentially, Defendants argue that their construction ensures that the term "pinion" is not read out of the claim. Additionally, Defendants cite to the dictionary which defines the term "pinion gear" as "a gear with a small number of teeth designed to mesh with a larger wheel rack." ECF 73 at 21 (citing "pinion," MERRIAM-WEBSTER'S COLLEGIATE DICTIONARY (11th ed. 2004)). The parties did not present oral argument on this term at the Markman Hearing.

2. The Court's construction.

Both parties cite Figure 1 of the '258 Patent to support their proposed construction. ECF 69-1 at 7.

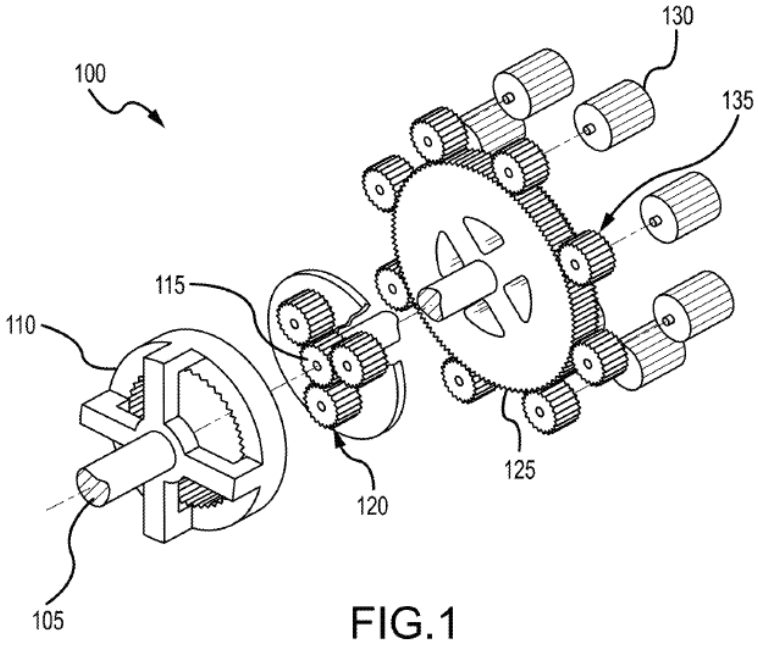

FIG.1

The specifications of the '258 Patent identify the smaller input pinion gears (135) that mesh with a single main planetary gear (125). *Id.* at 20 (7:15–16).[9] Defendants correctly point out that Figure 1 depicts a smaller gear meshing with a larger gear. However, Defendants proposed construction suffers from two problems.

First, Defendants have improperly attempted to import limitations from Figure 1 into the claim. *See Bradium Techs. LLC v. Iancu*, 923 F.3d 1032, 1049 (Fed. Cir. 2019) ("… it is long settled that even though claims must be read in light of the specification of which they are a part, it is improper to read limitations from the written description into a claim.") (internal quotations omitted). Second, Defendants citations to dictionaries and literature within the art indicate that a person of ordinary skill in the art would understand "input pinion gears" in the context of the patent. *See Phillips*, 415 F.3d at 1317 (explaining that technical dictionaries may help the court understand "the way in which one of skill in the art might use the claim terms.").

Considering the claims and specifications, the Court finds the evidence does not overcome the heavy presumption in favor of the plain and ordinary meaning. *Omega Eng'g, Inc. v. Raytek Corp.*, 334 F.3d 1314, 1323 (Fed. Cir. 2003).

[9] Figure 1 in the '533 Patent is identical to Figure 1 in the '258 Patent. ECF 69-2 at 13, 47(7:14–15).

Therefore, the Court construes **"input pinion gears"** to have its **plain and ordinary meaning.**

D. "Arms" ('533 Patent, claims 1, 10, 22).

No.	Claim Term	Plaintiffs' Proposed Construction	Defendants' Proposed Construction
4	"arms" '533 patent, claims 1, 10, 22	Plain and ordinary meaning. No construction needed.	Indefinite or "arms" do not include "gear teeth"

1. The parties' arguments.

Plaintiffs argue that "arms" is straightforward and readily apparent, even to lay judges. Plaintiffs also cite to the dictionary in support of their proposed construction. Additionally, Plaintiffs cite *Dynocom Indus., Inc. v. Mainline Auto. Equip. Pty. Ltd.* for the proposition that "arms" is so definite that courts have found it necessary to define only the words modifying "arms." ECF 69 at 24 (citing No. 216CV00553JRGRSP, 2017 WL 3020826, at *4 (E.D. Tex. July 17, 2017)). Finally, Plaintiffs argue that Defendants are merely attempting to construe "arms" in a manner that will avoid infringement.

Defendants argue that "arms" is indefinite under § 112(b). Alternatively, Defendants propose that "arms" be defined as not including "gear teeth." Defendants assert that the term "arms," by itself, is imprecise and could mean a number of things depending on the use. Moreover, Defendants argue that "arms" lacks an antecedent basis as "arms" is never mentioned in the patent until the claim

and thus fails to give reasonable certainty with respect to the scope of the claim. ECF 73 at 23 (citing *Halliburton v. M-I LLC*, 514 F.3d at 1249). Further, Defendants argue that Plaintiffs propose a "boundless construction," which even Mr. Chambers could not further clarify. *Id.* Defendants also allege that Plaintiffs are offering an imprecise construction so they can "broadly accuse infringement." *Id.*

In support of their alternative construction, Defendants argue the evidence establishes that "arms" cannot include gear teeth. If arms were construed to include gear teeth, Defendants assert that the '533 Patent would impermissibly recapture subject matter previously disclosed in U.S. Patent App. Pub. Nos. 16/647,832 ("Buckley") and 14/304,748 ("Bergan"). *Id.* at 24 (citing *Karsten Manuf. Corp. v. Cleveland Golf Co.*, 242 F.3d 1376, 1384 (Fed. Cir. 2001)). Defendants conclude that adopting a plain and ordinary construction would improperly leave the scope of the claim to the jury in violation of *Markman*.

2. The Court's construction.

The term "arms" is not identified in the '533 Patent via the specifications or accompanying figures. However, for clarity, during the Markman Hearing, Plaintiffs identified "arms," in Figure 1 which depicts a planetary gear train. (yellow shading added).

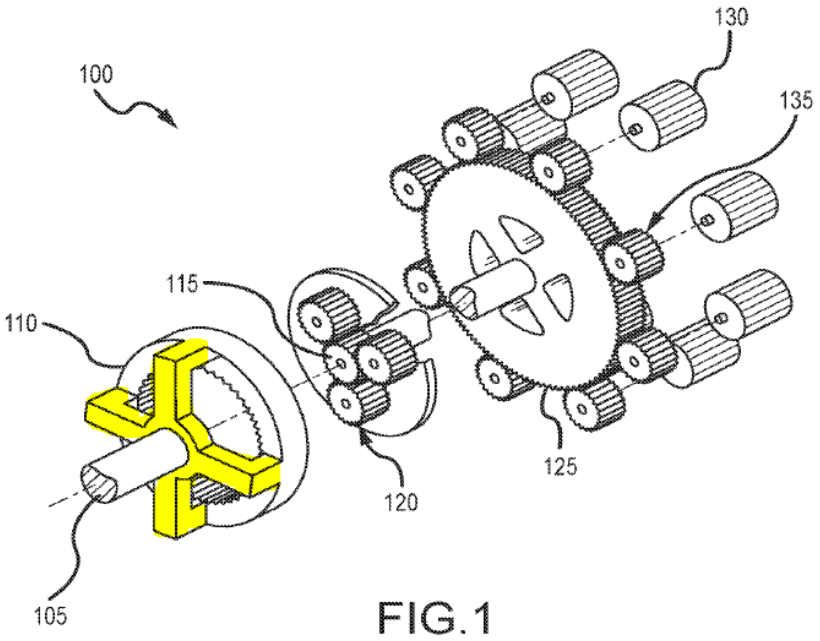

FIG. 1

In pertinent part, the claim describes "a final drive gear connected to the pump crankshaft of the multi-plunger hydraulic fracturing pump by a plurality of **arms** extending from the final drive gear." ECF 69-2 at 48 (9:26–28) (emphasis added). The specifications describe Figure 1 as follows:

> The main planetary gear **125** may in turn drive the sun gear **115** positioned central to the three planetary gears **120**. The final drive gear **110** may have internal gear teeth positioned to catch the external gear teeth of the three planetary gears **120** which may cause rotation of the pump crankshaft **105**.

Id. at 47 (7:25–29). The specification above corresponds to Figure 1 in such a way that a person of ordinary skill in the art would understand the scope of the claim.

Further, the claim language, in conjunction with the specifications, informs a person of ordinary skill in the art about the scope of the term "arms." Additionally, the dictionary defines "arms" as "a slender part of a structure, machine, or an instrument projecting from a main part, axis or fulcrum."[10] *See Cross Medical Prods, Inc. v. Medtronic Sofamor Danek, Inc.*, 424 F.3d 1293, 1305 (Fed. Cir. 2005) ("[W]e may refer to the dictionary to begin understanding the ordinary meaning of these claim terms.").

Defendants point to Mr. Chambers' deposition testimony stating "arms" "could be those four L-shaped structures," as evidence that Plaintiffs' proposed construction is overbroad. ECF 69-11 at 24 (88:19–89:8). Defendants argue that Mr. Chambers' equivocation demonstrates that a person of ordinary skill in the art would not understand the scope of the term. However, Mr. Chambers' testimony, equivocal or not, identifies "arms" in the figure that are consistent with the plain and ordinary meaning of "arms" in the context of the claim. Nor, as Defendants argue, does the lack of an antecedent basis affect the plain and ordinary meaning. *See In re Downing*, 754 F. App'x 988, 996 (Fed. Cir. 2018) (quoting *In re Packard*, 751 F.3d 1307, 1310, 1314 (Fed. Cir. 2014) ("[L]ack of an antecedent basis does not render a claim indefinite as long as the claim 'apprises one of ordinary skill in the

[10] "arm." 2024. Merriam-Webster.com. Last accessed May 7, 2025, from https://www.merriam-webster.com/dictionary/arms?src=search-dict-box.

art of its scope and, therefore, serves the notice function required by [§ 112(b)].'"). As discussed above, the claim, read in context with the specifications, adequately informs a person of ordinary skill in the art about the scope of the term "arms" as it appears in the claims. On balance, the claim language, the specifications, and the dictionary definition, lead the Court to assign "arms" its plain and ordinary meaning.

Additionally, Defendants' alternative construction of "arms" attempts to impose a negative limitation into the claim. "Claim constructions that exclude a particular element" are negative limitations. *Ethicon LLC v. Intuitive Surgical, Inc.*, 847 F. App'x 901, 907 (Fed. Cir. 2021). To import a negative limitation into the claim, "such exclusions must find support either in the words of the claim or through an express disclaimer or independent lexicography in the written description that would justify adding that negative limitation." *Id.* (citing *Raytek*, 334 F.3d at 1323). Defendants have not cited, nor has the Court found, words in the claim that support their proposed alternative construction. Further, the specifications do not include an express disclaimer or independent lexicography that supports an alternate construction of "arms" to mean "arms do not include gear teeth." Moreover, Defendants' argument, that "gear teeth" in the accused device cannot be "arms," appears to be aimed at the issue of infringement, a decision which is reserved for the fact finder and not appropriate at the claim construction phase. *See Eon Corp. IP Holdings v. Silver Springs Networks*, 815 F.3d 1314, 1319 (Fed. Cir. 2016) ("courts

should not resolve questions that do not go to claim scope, but instead go to infringement …"); *See also PPG Indus. v. Guardian Indus. Corp.*, 156 F.3d 1351, 1355 (Fed. Cir. 1998) ("[A]fter the court has defined the claim with whatever specificity and precision is warranted by the language of the claim and the evidence bearing on the proper construction, the task of determining whether the construed claim reads on the accused product is for the finder of fact.").

Therefore, the Court construes **"arms"** to have its **plain and ordinary meaning.**

E. "One or more processing devices configured to receive a first parameter from a first device of the plurality of pumps, the distribution system, or the wellhead, and transmit the first parameter to a second device of the plurality of the plurality of pumps, the distribution system, or the wellhead, and detect that the first parameter is outside of an acceptable threshold; and generate automated control instructions at the second device based at least in part on the first parameter" ('435 Patent, claim 1).

No.	Claim Term	Plaintiffs' Proposed Construction	Defendants' Proposed Construction
5	"one or more processing devices configured to receive a first parameter from a first device of the plurality of pumps, the distribution system, or the wellhead, and transmit the first parameter to a second device of the plurality of the plurality of pumps, the distribution system, or the wellhead, and detect that the first parameter is outside of an acceptable threshold; and generate automated control instructions at the second device based at least in part on the first parameter" '435 patent, claim 1	Plain and ordinary meaning. No construction needed.	Indefinite

"Generating the automated instructions at the second device based at least in part on the first parameter, and automatically adjusting one or more functions of the second device based on the automated instructions" ('435 Patent, claim 7).

No.	Claim Term	Plaintiffs' Proposed Construction	Defendants' Proposed Construction
6	"generating the automated instructions at the second device based at least in part on the first parameter, and automatically adjusting one or more functions of the second device based on the automated instructions" '435 patent, claim 7	Plain and ordinary meaning. No construction needed.	Indefinite

"Generating automated instructions at the second device based at least in part on the first parameter, and automatically adjusting one or more functions of the second device based on the automated instructions" ('435 Patent, claim 13).

No.	Claim Term	Plaintiffs' Proposed Construction	Defendants' Proposed Construction
7	"generating automated instructions at the second device based at least in part on the first parameter, and automatically adjusting one or more functions of the second device based on the automated instructions" '435 patent, claim 13	Plain and ordinary meaning. No construction needed.	Indefinite

1. The parties' arguments.

The parties group their arguments for the three disputed terms in the '435 Patent together. Plaintiffs argue that, when read in full context of the claims, the limitations would be clearly understandable to a person of ordinary skill in the art. ECF 69 at 28 (citing '435 Patent Claims 1, 7, 13). Plaintiffs further assert that the

breadth of the claims in the '435 Patent does not warrant a narrowing of their scope and that narrowing the scope of a claim to benefit an accused infringer is not the purpose of claim construction. Without a clear disavowal or lexicography, Plaintiffs contend they are entitled to the full scope of their claim. *Id.* (citing *Wasica*, 853 F.3d at 1282). Plaintiffs also explain that the specifications provide examples of what is covered by the claims, specifically as to "devices". *Id.* (citing '435 Patent at 5:37–6:30). Plaintiffs also argue the testimony of both experts echoes the teachings of the specifications.

Plaintiffs' Reply (ECF 75) addresses Defendants' apparent 112(f), means-plus-function argument (ECF 73 at 29). However, at the Markman Hearing, Defendants stipulated that they are not making a 112(f) argument and waived any such argument with respect to this claim. Rather, Defendants argue only that the disputed terms of the '435 Patent are indefinite under § 112(b). Specifically, Defendants argue that the '435 Patent terms are so vague that they impose no concrete limitations on what constitutes a first device or second device. In other words, Defendants contend that the functions of the claimed devices are effectively limitless. Defendants acknowledge that Plaintiffs are "free to choose a broad term and expect the full scope of its plain and ordinary meaning." ECF 73 at 27 (citing *Wasica*, 853 F.3d at 1282). However, Defendants argue that Plaintiffs have gone too far by engaging in purely functional claiming with no objective boundaries.

2. The Court's construction.

Figure 1 is a schematic representation of an embodiment of a hydraulic fracturing system positioned at a well site. ECF 69-4 at 15(3:39–30).

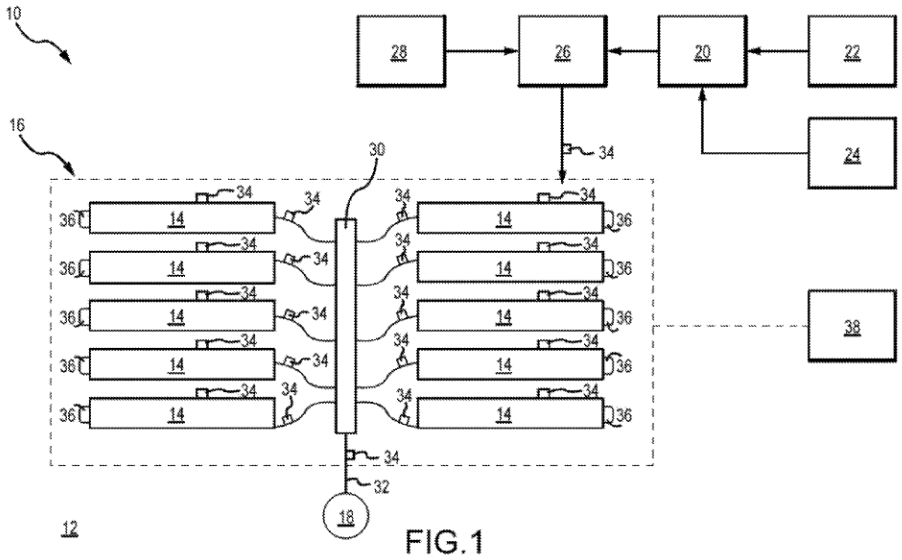

FIG.1

In Figure 1, "one or more sensors **34, 36** are arranged throughout the hydraulic fracturing system []." *Id.* (3:56–57). Figure 1 provides context for a person of ordinary skill in the art regarding the nature of the devices described in the claim. Figure 2 depicts a schematic representation of an automated hydraulic fracturing system described in the '435 Patent claims.

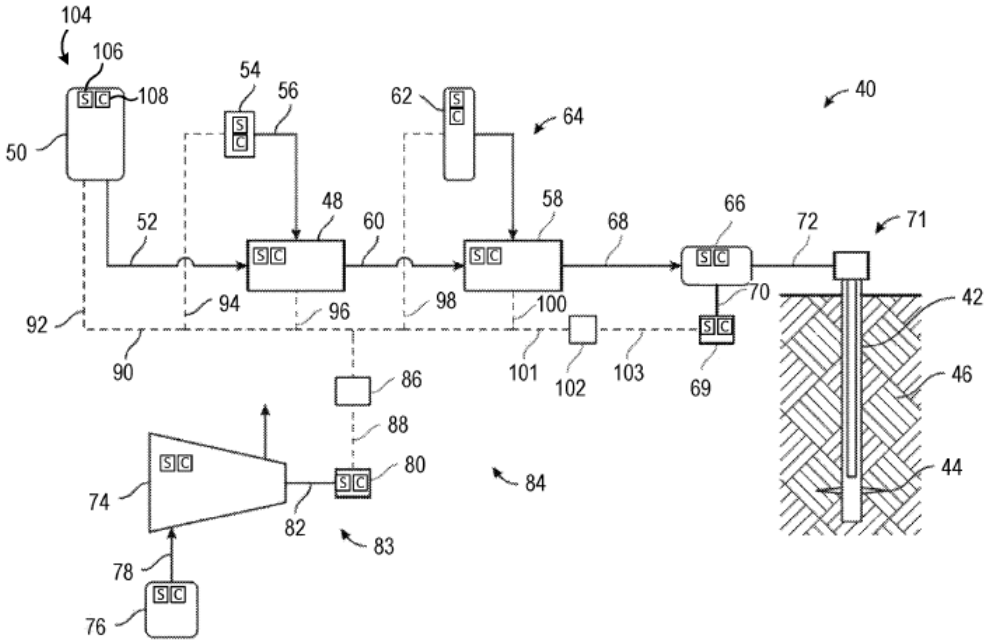

FIG.2

ECF 69-4 at 10. Within Figure 2 are one or more "instrumentation devices **104** such as various types of sensors **106** and controllers **108** …" *Id.* at 16 (5:25–27) (emphasis in original). The specifications describe various types of instrumentation devices such as:

> "low pressure transducers (low and high frequency), high pressure transducers (low and high frequency), low frequency accelerometers, high frequency accelerometers, temperature sensors, external mounted flow meters such as doppler and sonar sensors, magnetic flow meters, turbine flow meters, proximity probes and sensors, speed sensors, tachometers, capacitive, doppler, inductive, optical, radar, ultrasonic, fiber optic, and hall effect sensors, transmitters and receivers, stroke

> counters, GPS location monitoring, fuel consumption, load cells, PLCs, and timers.

Id. (5:35–48). The specifications describe in detail the features of the communication components and how the features of the '435 Patent may be implemented. *Id.* (5:51–65, 6:20–61).

Additionally, Figure 6, is a flow chart of an automated hydraulic fracturing method.

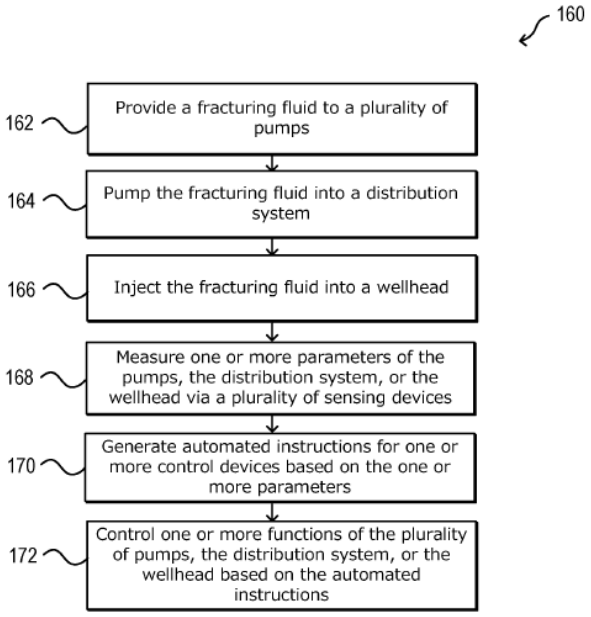

FIG.6

Id. at 11. Figure 6 illustrates the sequence of events such that a person of ordinary skill in the art would understand the scope of the claim.

Defendants argue that the '435 Patent results in functional claiming for generic computer "devices" with no algorithm disclosed. ECF 73 at 29. Indeed, "[c]omputer implemented functions generally must recite an algorithm." *Function Media, L.L.C. v. Google, Inc.*, 708 F.3d 1310, 1318 (Fed. Cir. 2013). An algorithm is a "step-by-step procedure for accomplishing a given result." *Ergo Licensing, LLC v. CareFusion 303, Inc.*, 673 F.3d 1361, 1365 (Fed. Cir. 2012). Figure 6 provides the algorithm Defendants argue is missing.

While Defendants argue that the term "devices," as used in the claims, is impermissibly limitless, when "the intrinsic record supports several definitions of a term, the term may be construed to encompass all such consistent meanings." *Wasica*, 853 F.3d at 1281 (citing *Rexnord Corp. v. Laitram Corp.*, 274 F.3d 1336, 1343 (Fed. Cir. 2001); *See Johnson Worldwide Assoc., Inc. v. Zebco Corp.*, 175 F.3d 985, 991 (Fed. Cir. 1999) ("Varied use of a disputed term in the written description demonstrates the breadth of the term rather that providing a limited definition."). In the context of the '435 Patent, what constitutes a "first device" and a "second device" is not strictly limited by the specifications. Defendants' argument that "devices" is indefinite is in fact an argument against the breadth of the claims. A claim term is not indefinite simply because it is broad. *BASF Corp. v. Johnson Matthey Inc.*, 875 F.3d 1360, 1367 (Fed. Cir. 2017) ("Breadth is not indefiniteness."). Plaintiffs have neither disclaimed nor inserted alternative lexicography and are thus "free to choose

a broad term and expect to obtain the full scope of its plain and ordinary meaning." *Thorner v. Sony Computer Ent. Am. LLC*, 669 F.3d 1362, 1367 (Fed. Cir. 2012).

Defendants have not shown that the '435 Patent claims fail to "inform a person of ordinary skill in the art about the scope of the invention with reasonable certainty." *Nautilus*, 572 U.S. at 910. The claims and the specifications provide the information a person of ordinary skill in the art would need to understand the scope of the invention.

Therefore, the Court construes the words **"one or more processing devices configured to receive a first parameter from a first device of the plurality of pumps, the distribution system, or the wellhead, and transmit the first parameter to a second device of the plurality of the plurality of pumps, the distribution system, or the wellhead, and detect that the first parameter is outside of an acceptable threshold; and generate automated control instructions at the second device based at least in part on the first parameter"** and **"generating the automated instructions at the second device based at least in part on the first parameter, and automatically adjusting one or more functions of the second device based on the automated instructions"** to have their **plain and ordinary meaning.**

F. "Common support structure" ('878 Patent, claim 1).

No.	Claim Term	Plaintiffs' Proposed Construction	Defendants' Proposed Construction
8	"common support structure" '878 patent, claim 1	Plain and ordinary meaning. No construction needed.	"same raised structure, like a skid, truck bed, or flatbed trailer"

1. The parties' arguments.

Plaintiffs argue that "common support structure" is straightforward and would be readily apparent to a lay judge, let alone a person of ordinary skill in the art. Further, Plaintiffs argue that Defendants' proposed construction improperly attempts to import limitations from the specifications. ECF 69 at 31 (citing '878 Patent at 10:9–12 ("It should be appreciated that inclusion of a trailer is for illustrative purposes only and that the components may also be mounted on a skid, truck bed, flatbed trailer, or the like.")).

Defendants argue that its proposed construction is supported by the prosecution history and patent specifications. ECF 73 at 31 (citing '878 Patent at 10:11–12). Further, Defendants argue that their proposed construction is consistent with Mr. Chambers' testimony with respect to the scope of "common support structure." *Id.* (citing ECF 69-11, Chambers Deposition at 125:17–18). The parties did not present oral argument on this term at the Markman Hearing.

2. The Court's construction.

"Common support structure" does "not require elaborate interpretation." *Brown v. 3M*, 265 F.3d 1349, 1352 (Fed. Cir. 2001). In some cases, as is the case here, "the ordinary meaning of claim language as understood by a person of ordinary skill in the art may be readily apparent even to lay judges, and claim construction … involves little more than application of the widely accepted meaning of commonly understood words." *Phillips*, 415 F.3d at 1314. The evidence does not demonstrate that the Court should construe "common support structure" apart from its plain and ordinary meaning.

Further, the Court agrees that Defendants' proposed construction imports limitations from the specifications into the claim. While claims must be read in light of the specifications, limitations from the specification must not be transported into the claims. *Id.* at 1323. Here, Defendants import specific language *verbatim* from the specification into its proposed construction. *See* ECF 73 at 31 (citing '878 Patent, 10:11–12) ("It should be appreciated that inclusion of a trailer is for illustrative purposes only and that the components may also be mounted on a skid, truck bed, flatbed trailer, or the like."). Moreover, the intrinsic evidence aligns with the "heavy presumption" that "common support structure" "would be understood by a person of ordinary skill in the art." *Raytek*, 334 F.3d at 1323.

Therefore, the Court construes **"common support structure"** to have its **plain and ordinary meaning.**

VI. Conclusion and Order.

The Court adopts the constructions set forth above for the disputed terms of patents-in-suit.

SO ORDERED.

Signed on May 30, 2025, at Houston, Texas.

Christina A. Bryan
United States Magistrate Judge