US006523711B1

(12) **United States Patent**
Hughes et al.

(10) **Patent No.: US 6,523,711 B1**
(45) **Date of Patent: Feb. 25, 2003**

(54) **AUTOMATIC VALVED BOTTLE CAP FOR USE WITH LIQUID CONTAINERS**

(75) Inventors: **Douglass E. Hughes**, 3457 Iris Ct., Boulder, CO (US) 80304; **Raymond G. Bryan**, Reno, NV (US)

(73) Assignee: **Douglass E. Hughes**, Boulder, CO (US)

(*) Notice: Subject to any disclaimer, the term of this patent is extended or adjusted under 35 U.S.C. 154(b) by 0 days.

(21) Appl. No.: **09/548,553**

(22) Filed: **Apr. 13, 2000**

(51) **Int. Cl.**[7] **A47G 19/22**

(52) **U.S. Cl.** **220/709**; 215/308; 215/309; 215/311; 215/388; 239/33; 220/705; 220/25.2; 220/714; 220/367.1

(58) **Field of Search** 239/33; 210/282, 210/473, 477, 482, 502.1; 222/189.06, 189.1, 464.2, 481.5, 484, 528, 529, 530, 494, 212; 215/388, 308, 309, 311, 235; 220/705, 707, 708, 709, 711, 714, 716, 717, 252, 263, 367.1, 371

(56) **References Cited**

U.S. PATENT DOCUMENTS

2,529,817	A		11/1950	Russell
2,844,267	A		7/1958	Petriccione
3,294,293	A		12/1966	Johns
3,337,098	A		8/1967	Johns
3,858,773	A		1/1975	Del Bon
4,239,132	A	*	12/1980	Mueller et al.
4,408,702	A	*	10/1983	Horvath
4,485,963	A		12/1984	Panicci
4,513,891	A	*	4/1985	Hain et al.
4,714,173	A		12/1987	Ruiz
4,714,550	A	*	12/1987	Malson et al.
4,732,303	A	*	3/1988	Wang
4,881,668	A		11/1989	Kitterman et al.
4,925,043	A		5/1990	Dinand
4,991,745	A	*	2/1991	Brown
5,048,705	A	*	9/1991	Lynd et al.
5,065,909	A		11/1991	Pino et al.
5,150,815	A		9/1992	Saklad
5,156,335	A	*	10/1992	Smith et al.

(List continued on next page.)

Primary Examiner—Robin Hylton
(74) *Attorney, Agent, or Firm*—Steven C. Petersen; Hogan & Hartson LLP

(57) **ABSTRACT**

A sports bottle cap having a pressure differential valve is provided which allows water to flow out through the bottle cap only when the bottle is inverted and squeezed or alternatively a straw may be threaded through the pressure differential valve, thereby deactivating it, and attached to the bottle cap allowing the user to draw liquid from the bottle through the straw. In operation the bottle cap of the present invention allows the user to dispense fluid from within the bottle in two different ways. The first manner of use allows liquid to be dispensed only when the bottle containing the liquid is inverted and squeezed. Squeezing causes the pressure to increase on the inside of the bottle thereby causing the pressure differential valve to open and liquid to exit; however, when the bottle is not squeezed the pressure differential valve remains in the closed position sealing bottle. The second manner of use allows the user to convert bottle cap for use as a sports mug having a straw-like tube to draw the liquid out of bottle. This configuration is accomplished simply by threading a straw through pressure differential valve thereby disengaging the pressure differential valve, and attaching the first end of the straw to a straw receptor located within the bottle cap. The bottle cap is then attached to the bottle and the user can suck liquid out of the bottle.

13 Claims, 11 Drawing Sheets

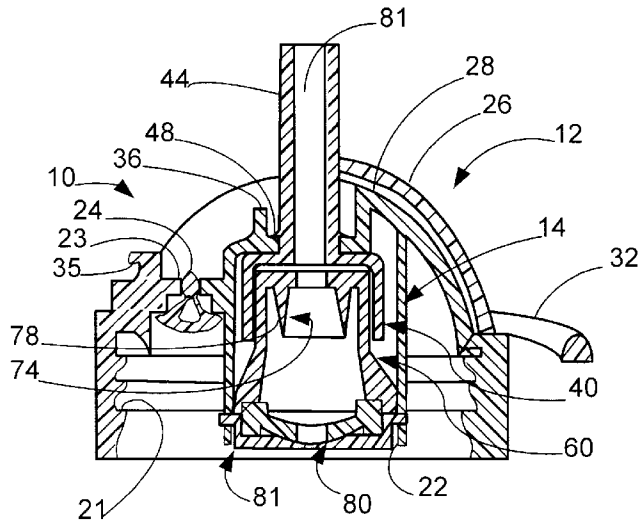

U.S. PATENT DOCUMENTS

5,188,283	A		2/1993	Gu
5,203,468	A		4/1993	Hsu
5,240,149	A	*	8/1993	Schmidt
5,242,079	A		9/1993	Stephens et al.
5,252,206	A		10/1993	Gonzalez
5,259,538	A		11/1993	Tardif
5,273,172	A		12/1993	Rossbach et al.
5,273,649	A		12/1993	Magnusson et al.
5,337,918	A	*	8/1994	Wang
5,339,982	A		8/1994	Tardie
5,346,081	A		9/1994	Lin
5,361,934	A		11/1994	Spence, Jr.
5,413,230	A	*	5/1995	Folter et al.
5,415,312	A		5/1995	Mueller
5,439,143	A		8/1995	Brown et al.
5,477,994	A	*	12/1995	Feer et al.
D366,809	S		2/1996	Green
D367,206	S		2/1996	Green
5,509,551	A	*	4/1996	Terrel, II
5,509,605	A	*	4/1996	Cripe
5,518,142	A		5/1996	Lin
5,520,304	A		5/1996	Lin
D370,828	S		6/1996	Green
D371,048	S		6/1996	Green
5,545,315	A		8/1996	Lonneman
5,579,948	A		12/1996	Lin
5,609,759	A		3/1997	Nohren, Jr. et al.
D382,170	S		8/1997	Green
5,653,878	A		8/1997	Reid
5,676,289	A	*	10/1997	Gross et al.
5,688,397	A	*	11/1997	Malmborg
5,688,588	A	*	11/1997	Cotton et al.
5,823,400	A	*	10/1998	Omori et al.
D408,220	S		4/1999	Chomik
5,897,013	A		4/1999	Manganiello
5,908,126	A	*	6/1999	Wang
5,919,365	A	*	7/1999	Collette
6,024,102	A		2/2000	Luzenberg, Jr.
6,050,444	A	*	4/2000	Sugg
6,065,635	A	*	5/2000	Sullivan
6,123,219	A	*	9/2000	Cornell et al.
6,142,384	A	*	11/2000	Shafik
6,145,695	A	*	11/2000	Garrigues
6,196,413	B1	*	3/2001	Tung
6,213,339	B1	*	4/2001	Lee

* cited by examiner

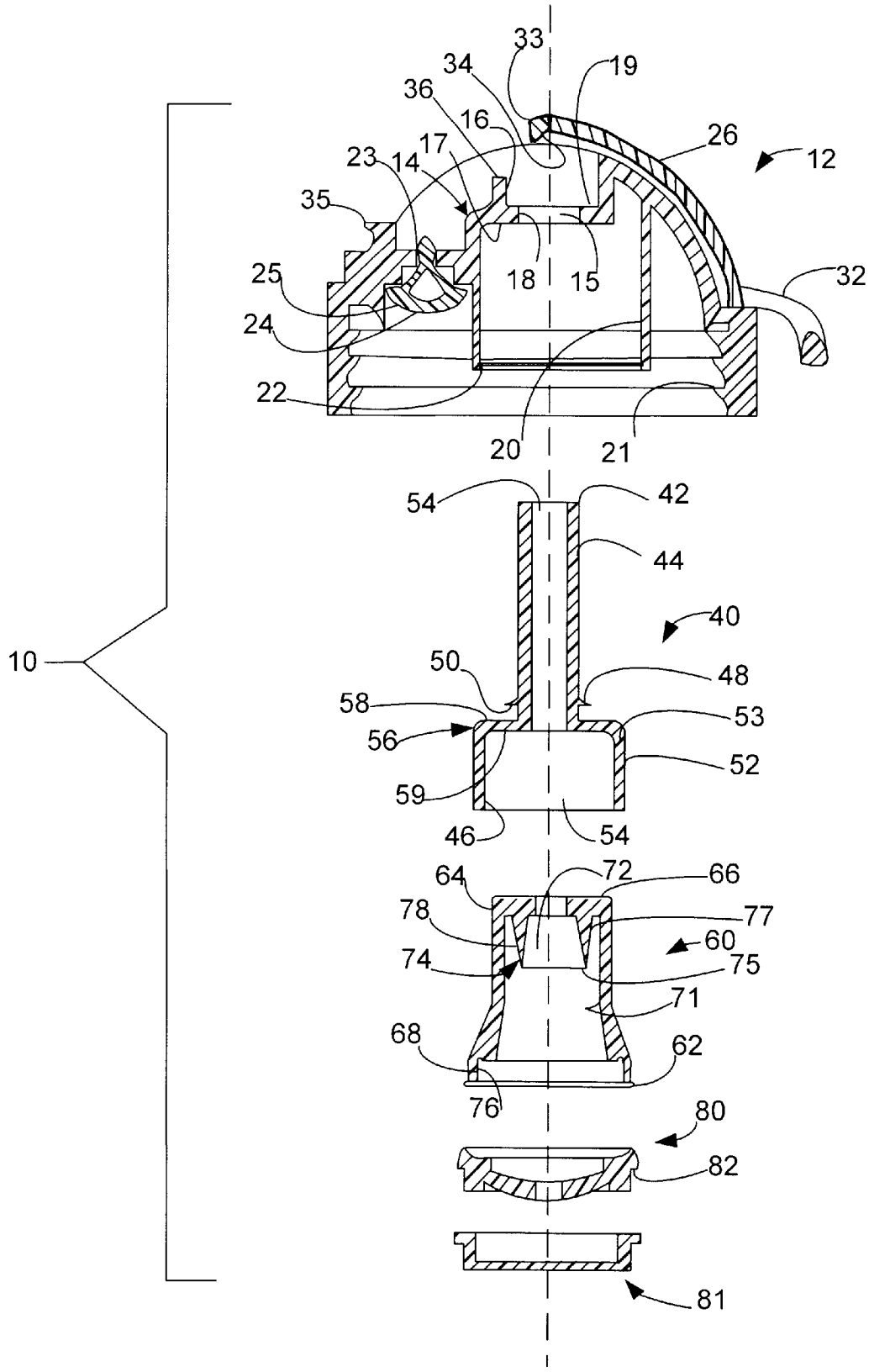
33
34
19
36
16
26
12
23
14
17
35
18
15
25
32
24
22
20
21
54
42
44
40
10
50
48
58
53
56
52
59
46
54
64
72
66
78
77
60
74
75
71
68
62
76
80
82
81

Figure 1

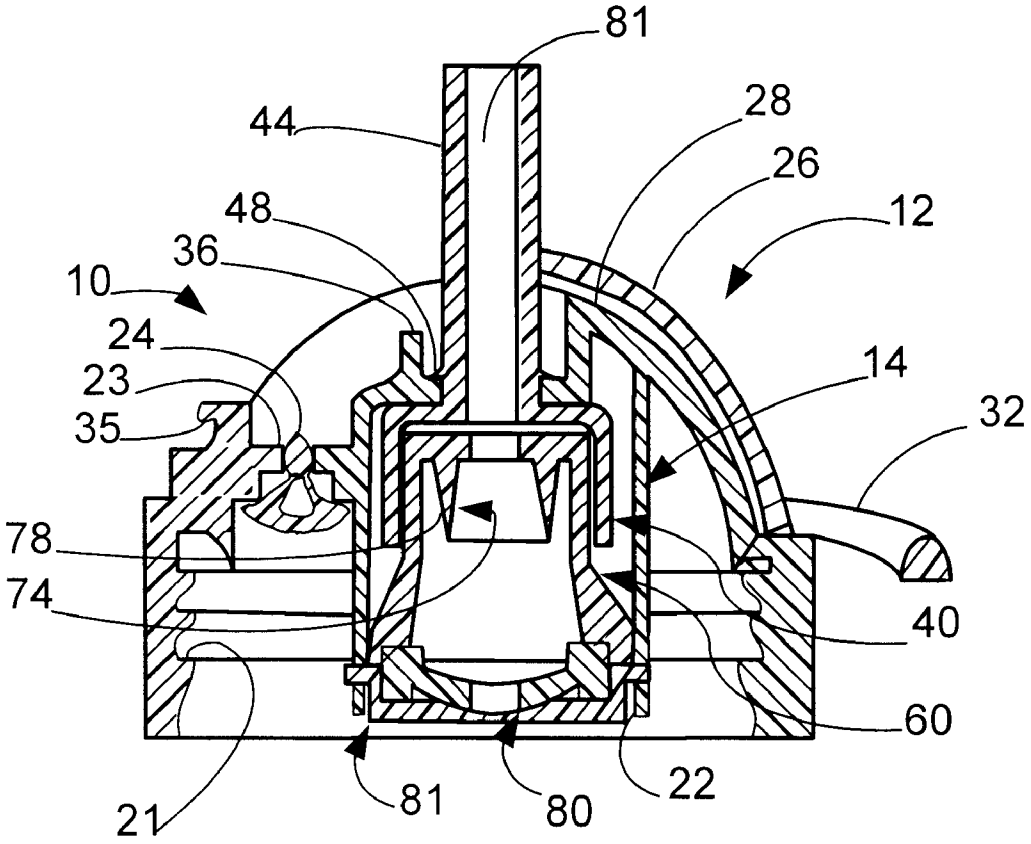

Figure 2

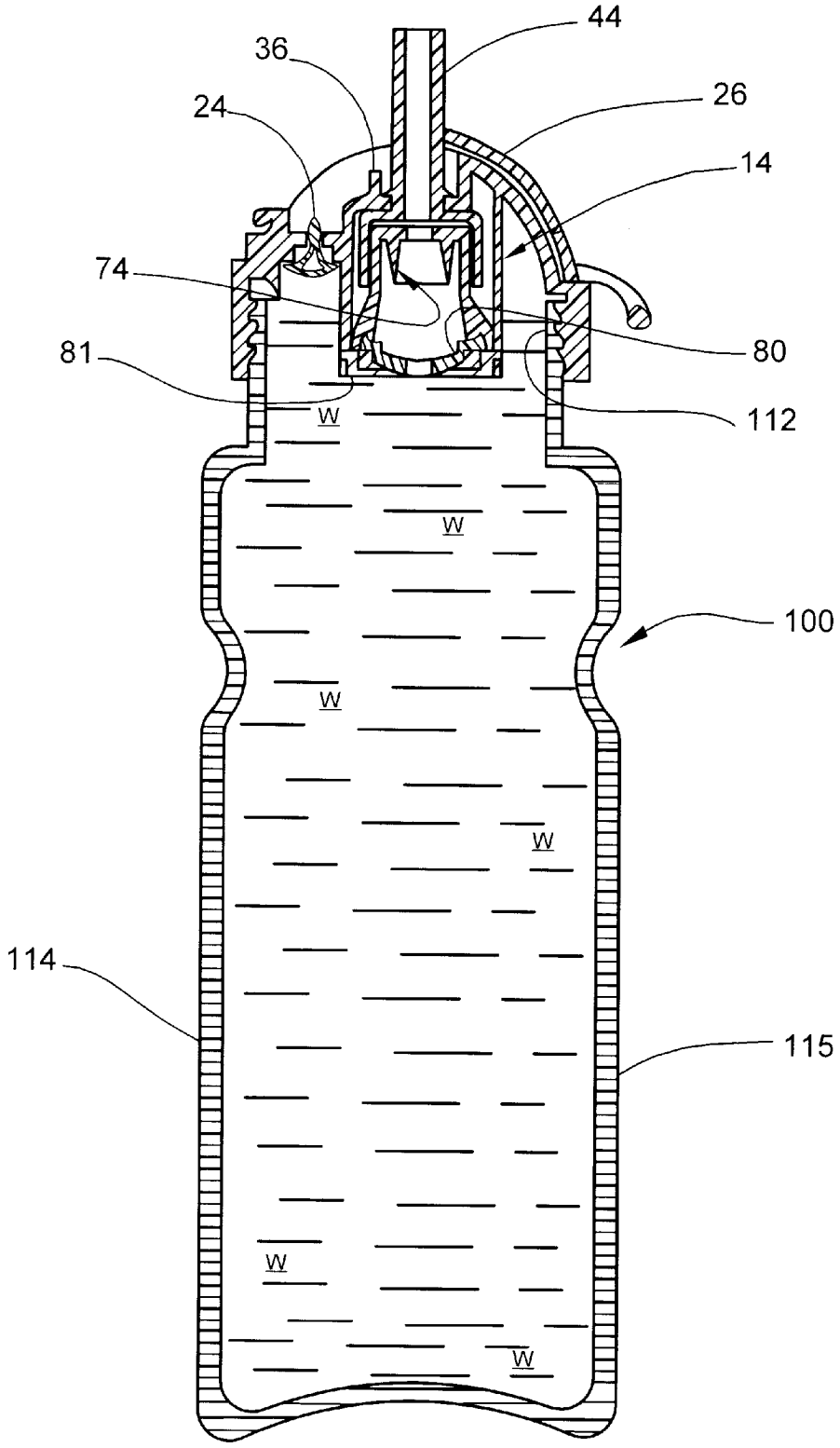

Figure 3

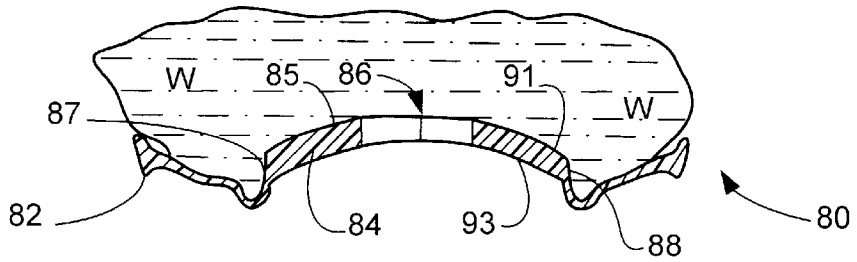

FIGURE 4

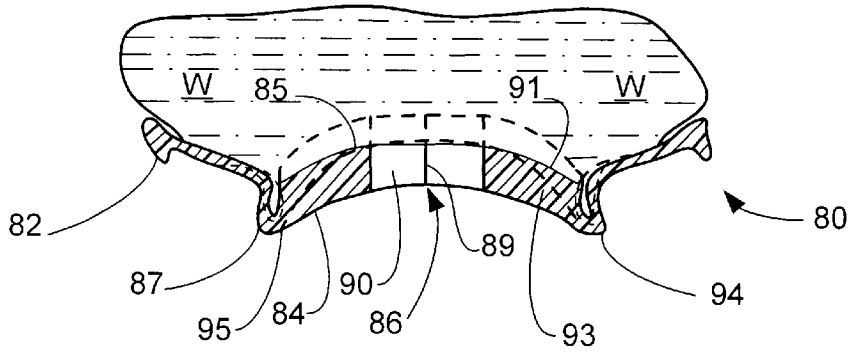

FIGURE 5

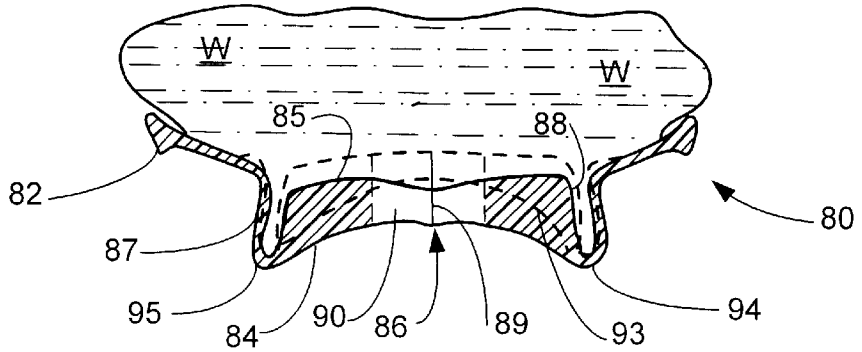

FIGURE 6

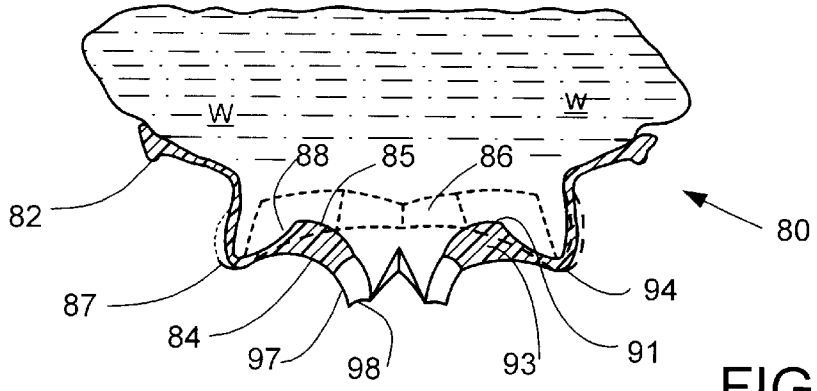

FIGURE 7

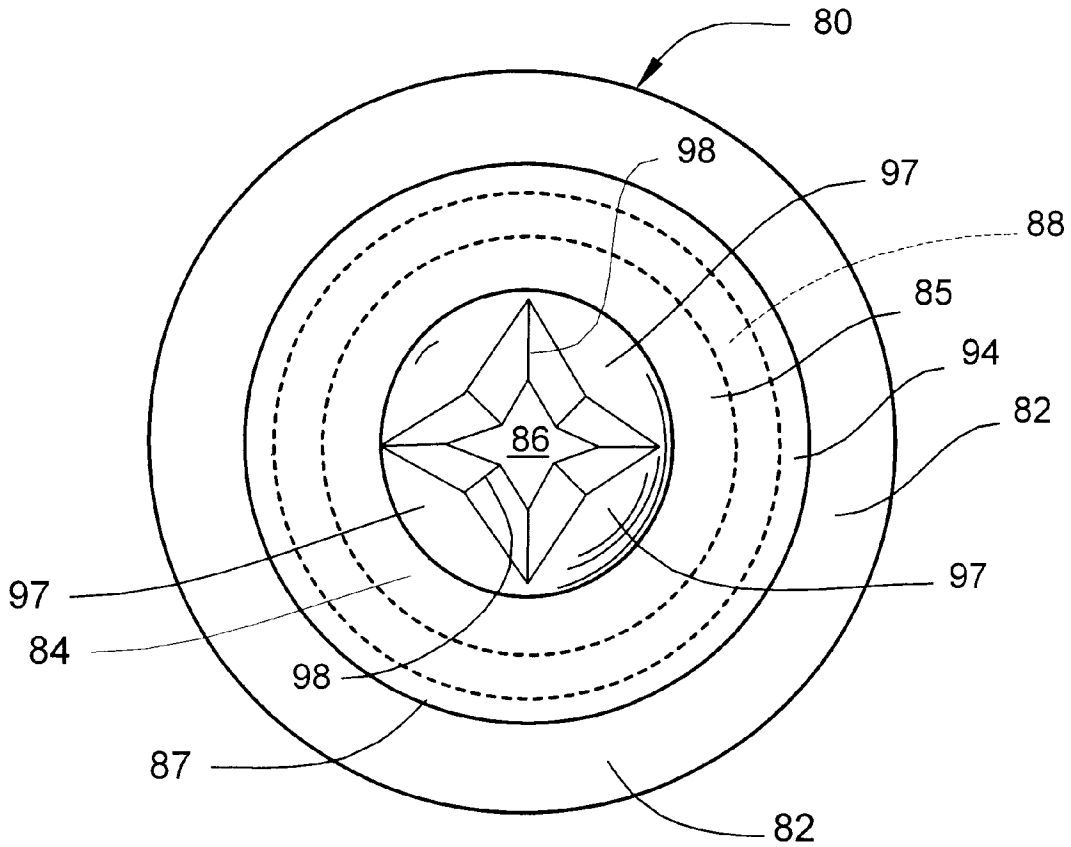

FIGURE 8

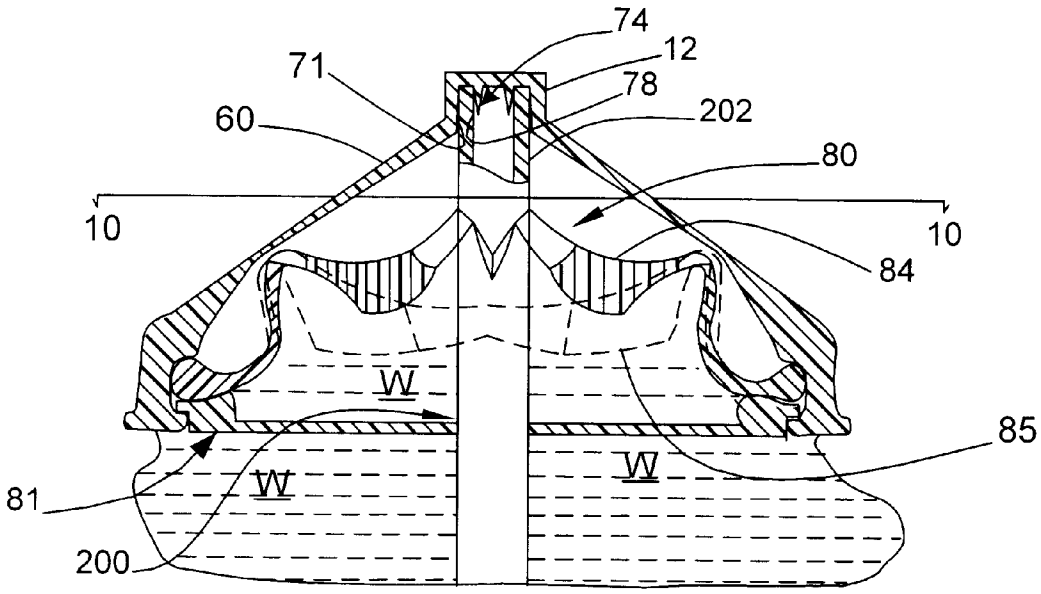

FIGURE 9

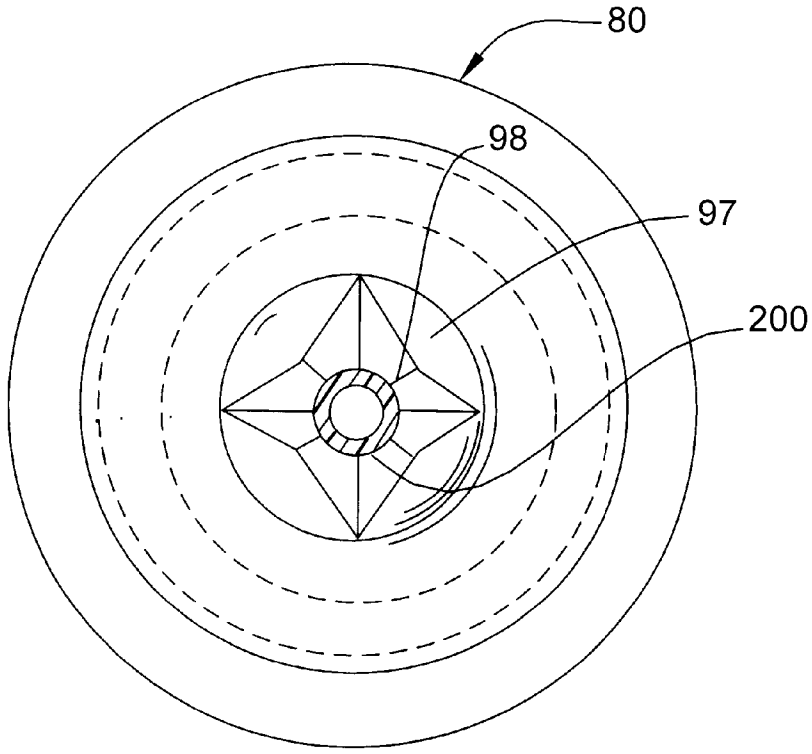

FIGURE 10

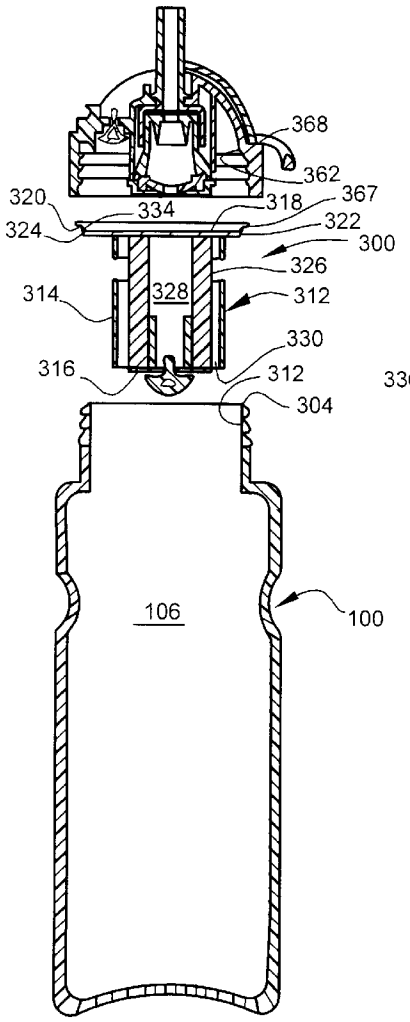

FIGURE 11

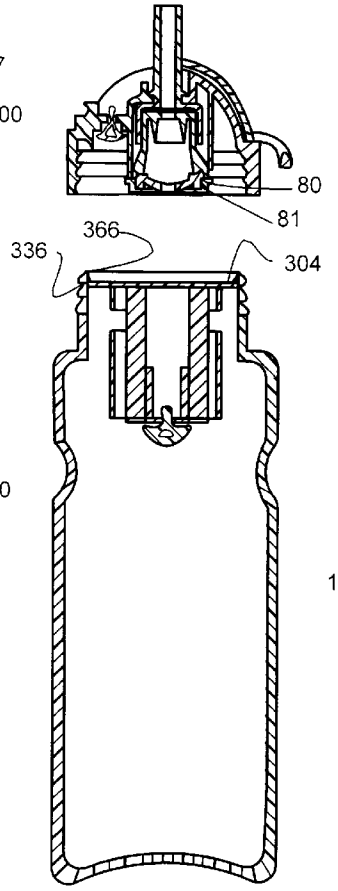

FIGURE 12

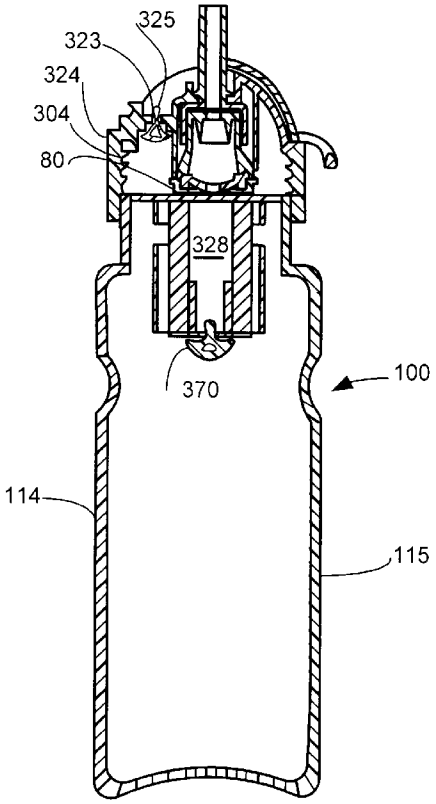

FIGURE 13

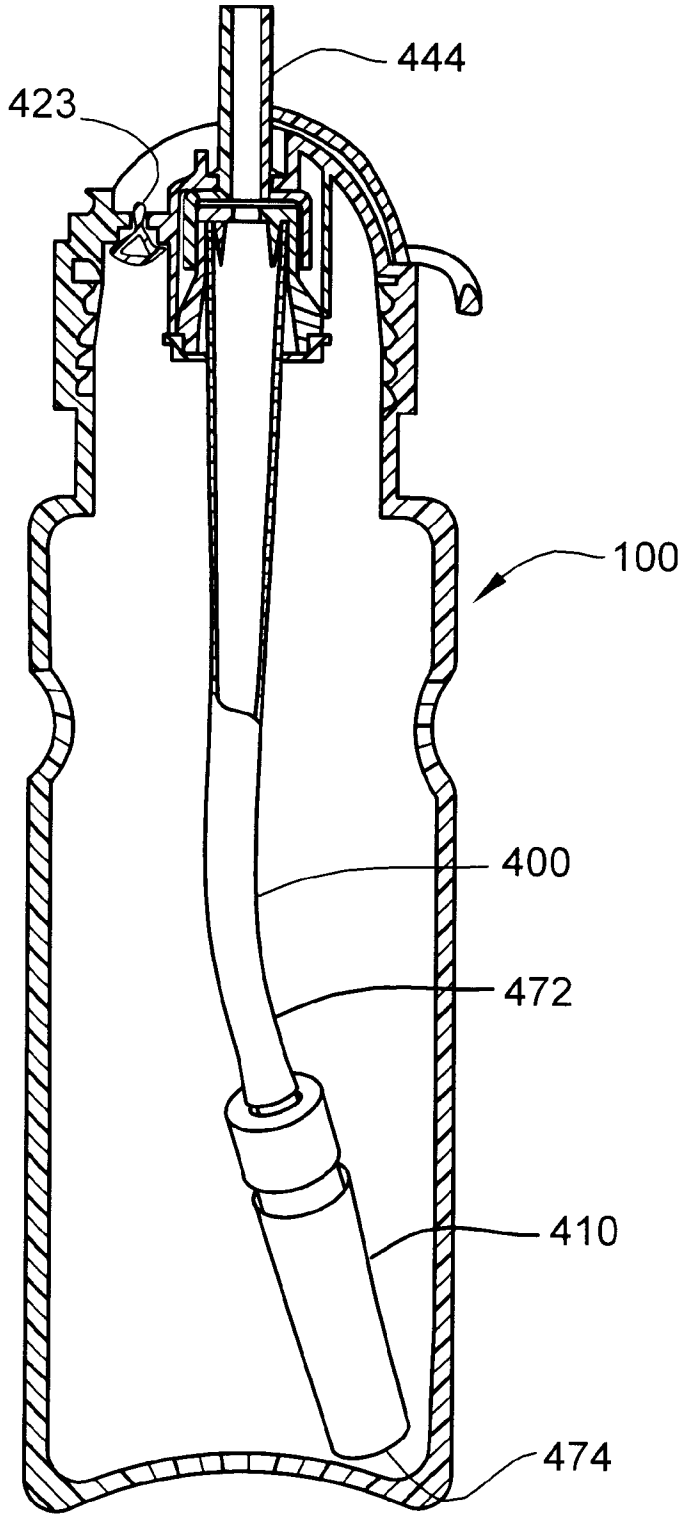

FIGURE 14

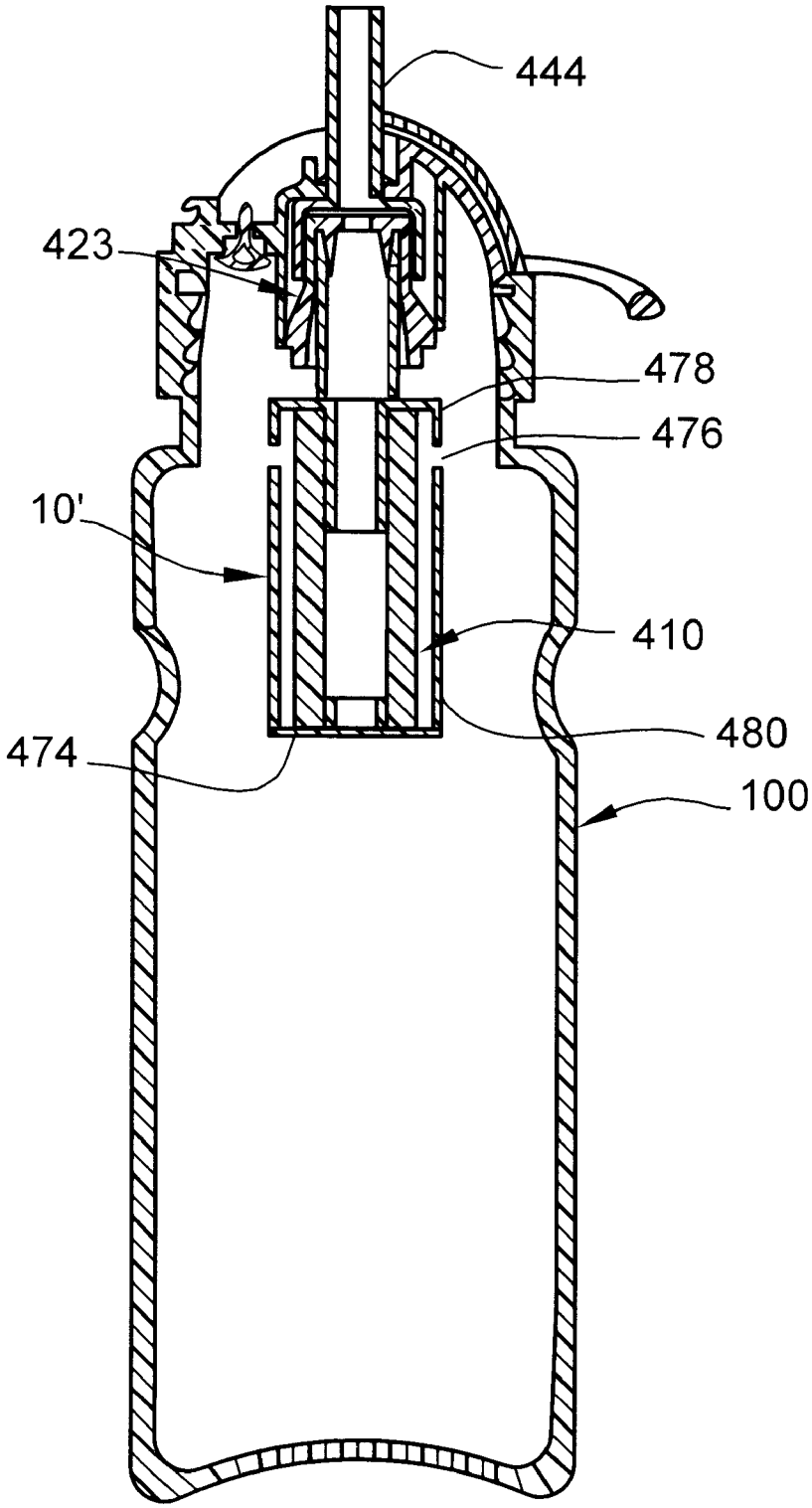

Figure 15

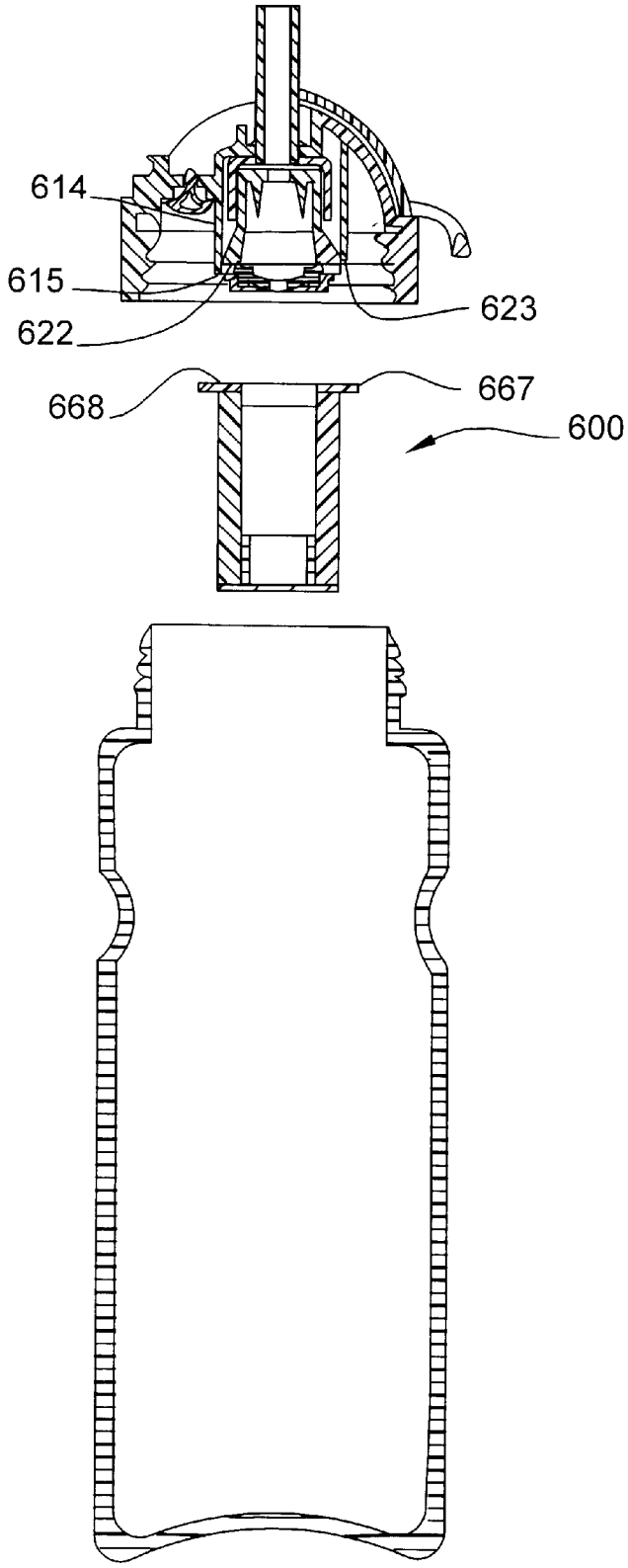

Figure 16

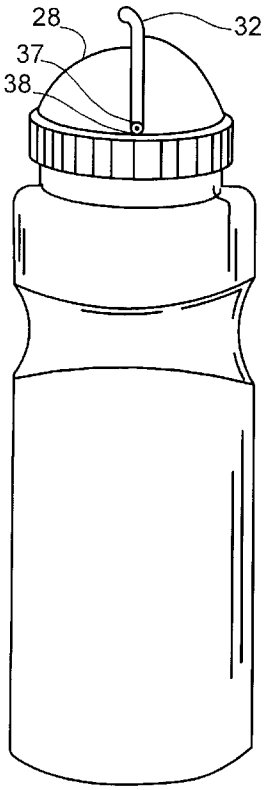

Figure 17

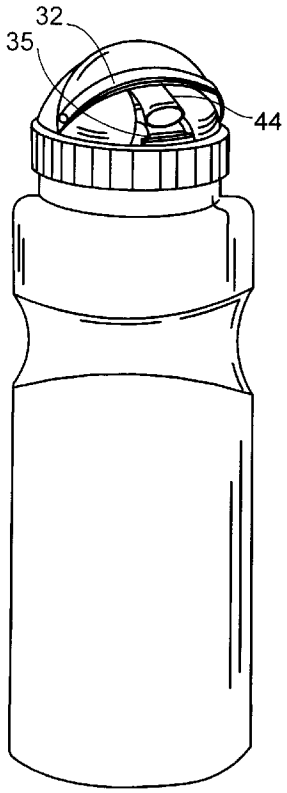

Figure 18

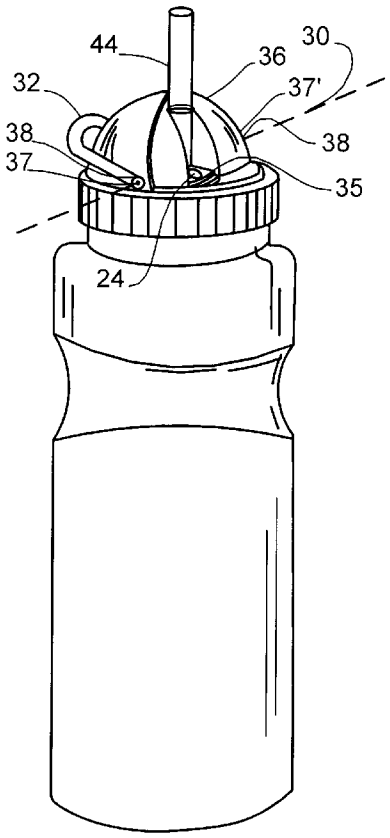

Figure 19

AUTOMATIC VALVED BOTTLE CAP FOR USE WITH LIQUID CONTAINERS

BACKGROUND OF THE INVENTION

1. Field of the Invention

This invention relates generally to a dual purpose dispensing cap for liquid containers. More specifically, this invention relates to a sports bottle cap having a pressure differential valve which allows water to flow out through the bottle cap only when the bottle is inverted and squeezed or alternatively a straw may be threaded through the pressure differential valve, thereby deactivating it, and attached to the bottle cap allowing the user to draw liquid from the bottle through the straw.

2. Description of the State of Art

As bottled water and staying hydrated has become more popular, the trend has led into portable water containers which serve the needs of the consumer who is frequently on the go, or travels during the day to school, work or needs to stay hydrated while driving. There are primarily three categories of containers designed for transportation. The first category consists of containers having a cap with a push-pull valve for manually opening and closing. A second and equally popular category of containers employ a straw-like tube that protrudes through the cap or closure of the container. The tube runs to the very bottom of the container and liquid is drawn from the bottle by sucking on the tube. Various versions of this type of container exist, including flexible, silicone tube tips which fold to protect from dirt and other contaminants contacting the tube while not in use. The third category of containers has a cap which simply screws on and off the bottle.

The push-pull valve is used for nearly all bike bottles, as well as bottled water containers in supermarkets designed for people on the go; however, the standard push-pull valve has a number of drawbacks that make its use difficult if not just plain undesirable. First, push-pull valves constantly require the use of the thumb and index finger to operate the valve, thereby passing germs from the user's hands to the drinking spout. Hands and fingers are almost always covered with a variety of bacteria and viruses omnipresent on everything we touch; consequently, the push-pull valve creates a dubious interface between the liquid being consumed and the user, since there is no effective way of opening it without using it as a stepping stone for spreading bacteria and other germs. Yet another drawback to the push-pull valve is that it actually requires both hands, since one hand must hold the container while the other hand operates the valve. While some users grasp the valve in their teeth to pull the valve open they eventually will have to push the valve closed which is typically accomplished by using the palm of their hand. Finally, since the push-pull valve is almost always a two-handed operation, performing typically safe activities that require at least one hand at all times, such as driving a car or bicycle, place the user at risk as they are no longer using their hands to steer their vehicle.

As a result of the drawbacks associated with push-pull valves, as discussed above, many consumers opt for the sports mug, which employs a straw-like tube that is held upright by an aperture in the bottle's closure. The outer diameter of the aperture is about the same size as the inner diameter of the straw-like tube, thus allowing the straw to fit snugly over the aperture in a stationary manner. The sports mug is generally meant to remain stationary and the user sucks on one end of the straw-like tube to draw the liquid up

and out of the mug. This configuration is as popular as the push-pull style closures, but appears more in offices, schools and places where the bottle has a stable resting place. The disadvantage with all straw-like tube containers is that they are more difficult to transport when full of a liquid, since the liquid is prone to spill during travel. The disadvantages of the non-valved closure that merely caps the bottle is that it too requires two hands to screw the cap on or off the bottle and it too easily spills if the bottle is knocked over and the cap is not securely fastened. A further disadvantage of existing container styles is that each can only be used in the single manner for which it was designed. A container designed to be inverted and poured or squeezed cannot be easily used with a straw-like tube; nor can a typical sports mug with straw-like tube be inverted and poured or squeezed. The designs have evolved to be mutually exclusive. This is cumbersome since some consumers need to use the invert and squeeze version, for example, while performing a specific athletic activity such as running or kayaking, to name two of many examples, yet may prefer to use the straw-like tube design while driving or sitting at a desk. The only current solution to date is to have two different containers.

Therefore, there is a need for a single portable container which is capable of functioning in a manner similar to either that of a push-pull valve or a container having a straw. There is a further need for a container availing itself to being operated with only one hand, where the hand does not need to come into direct contact with the closure, and which is further able to be used with a straw-like tube, such as in sports mugs. Finally, the issue of being spill proof is also important. All three of the typical aforementioned containers will spill if left open. In some cases, the straw-like tube designs have no provision for keeping the liquid from spilling out if the container is knocked over. Similarly the push-pull valve and cap closures for the invert and pour or squeeze bottles will also spill if the valve is left open or the cap is left off the container.

SUMMARY OF THE INVENTION

Accordingly, it is a general object of this invention to provide a bottle cap that does not have to be touched directly in order to open or close the bottle.

Still another object of the present invention is to provide a bottle closure mechanism that allows a container to function similarly to a container having a push-pull valve as well as a straw.

A further object of the present invention is to provide a container closure which is spill proof and sanitary.

Another object of the present invention is to provide a container closure means that is simple and easy to operate.

A final object of the invention is to provide for a means to integrate a water filtering method into the operation of the container with the closure means of the present invention so that a filter may be adapted to it without changing the way in which the bottle closure functions.

Additional objects, advantages and novel features of this invention shall be set forth in part in the description that follows, and in part will become apparent to those skilled in the art upon examination of the following specification or may be learned by the practice of the invention. The objects and advantages of the invention may be realized and attained by means of the instrumentalities, combinations, compositions, and methods particularly pointed out in the appended claims.

To achieve the foregoing and other objects and in accordance with the purposes of the present invention, as embod-

ied and broadly described therein, the apparatus of this invention may comprise a closure device in fluid communication with a pressure differential valve which is normally in the closed position until a pressure is exerted on the valve wherein the pressure is great enough to force the valve open.

BRIEF DESCRIPTION OF THE DRAWINGS

The accompanying drawings, which are incorporated in and form a part of the specification, illustrate the preferred embodiments of the present invention, and together with the description serve to explain the principles of the invention.

In the Drawings:

FIG. **1** is an exploded, side elevation view of the bottle cap of the present invention;

FIG. **2** is a side elevation view of the bottle cap of the present invention;

FIG. **3** is a schematic cross-sectional side elevation view of the bottle cap of the present invention attached to a container;

FIG. **4** is a cross-sectional view of the pressure differential valve used in the present invention installed in an associated container, with the valve shown in a fully closed, and partially extended position;

FIG. **5** is a cross-sectional view of the pressure differential valve used in the present invention installed in an associated container, with the valve shown in a fully closed, and fully extended position, wherein a valve head portion which is shown beginning to snap outwardly;

FIG. **6** is a cross-sectional view of the pressure differential valve used in the present invention installed in an associated container, with the valve shown in a fully closed, and fully extended position, wherein a valve head portion which is shown continuing to snap outwardly;

FIG. **7** is a cross-sectional view of the pressure differential valve used in the present invention installed in an associated container, with the valve shown in a fully open, and fully extended position, wherein the valve head portion which is shown snapped fully outward;

FIG. **8** is a bottom plan view of the pressure differential valve shown in the position illustrated in FIG. **7**;

FIG. **9** is a cross-sectional view of the pressure differential valve used in the present invention installed in an associated container, with the valve shown in a fully open, and fully extended position, wherein the valve head portion which is shown snapped fully outward has a straw-like tube threaded through the opening;

FIG. **10** is a bottom plan view of the pressure differential valve shown in the position illustrated in FIG. **9**;

FIG. **11** is a schematic cross-sectional side elevation view of the bottle cap of the present invention, in position for attachment to a container that is receiving a filter element in its neck;

FIG. **12** is a schematic cross-sectional side elevation view of the bottle cap of the present invention, in position for attachment to a container having a filter element installed in its neck;

FIG. **13** is a schematic cross-sectional side elevation view of the bottle cap of the present invention, attached to a container having a filter element installed in its neck;

FIG. **14** is a schematic cross-sectional side elevation view of the bottle cap of the present invention, receiving a straw-like tube having a filter attached to the opposite end;

FIG. **15** is a schematic cross-sectional side elevation view of the bottle cap of the present invention having a filter attached directly to the straw receptor;

FIG. **16** is a schematic cross-sectional side elevation view of a bottle cap of the present invention which is in fluid communication with a filter;

FIG. **17** is an isometric side view of a closed bottle cap of the present invention;

FIG. **18** is an isometric side/front view of the structure of FIG. **17** but with the bottle cap being partially closed; and

FIG. **19** is an isometric side/front view of the structure of FIG. **17** but with the bottle cap being fully opened.

DETAILED DESCRIPTION OF THE PREFERRED EMBODIMENT

The bottle cap **10**, according to this invention, is best illustrated in FIGS. **1** and **2** and comprises a domed cover **12** which irreversibly engages straw housing **40** which in turn irreversibly engages straw receptor **60** and pressure differential valve **80** thereby forming bottle cap **10** which fastens to and seals bottle **100** (FIG. **3**). Each individual element comprising bottle cap **10**, that is, the domed cover **12**, straw housing **40**, straw receptor **60** and pressure differential valve **80** are shown separated from one another in FIG. **1**, to illustrate their individual structures and will be discussed in further detail below. Furthermore, these individual structures are all constructed so that the bore of each element, when bottle cap **10** is fully assembled, forms a concentric channel **81** which thereby allows fluid flow through one single channel **81** between the inside and the outside of the bottle **100**. In operation this unique bottle cap **10** structure allows the user to dispense fluid from within the bottle **100** in two different ways. The first manner of use, which will be described in further detail below, allows liquid to be dispensed only when bottle **100** (shown in FIG. **3**) is inverted and squeezed. Squeezing causes the pressure to increase on the inside of the bottle thereby causing valve **80** to open and liquid to exit; however, when bottle **100** is not squeezed valve **80** remains in the closed position sealing bottle **100**. The second manner of use, which is also described in further detail below, allows the user to convert bottle cap **10** for use as a sports mug having a straw-like tube to draw the liquid out of bottle **100**. This configuration (shown in FIG. **9**) is accomplished simply by threading a straw **200** through valve **80**, thereby disengaging valve **80**, and attaching the first end **202** of the straw **200** to the straw receptor **60**. Bottle cap **10** is then attached to bottle **100** and the user can suck on the distal end **42** of straw housing **40** which is in fluid communication with the first end **202** of the straw **200**.

Referring now to FIG. **1**, the domed cover **12**, is preferably, but not necessarily molded from a rigid plastic material and includes an air return valve **24**, a retractable cover **26** and an elongated sleeve **14**. Elongated sleeve **14** protrudes transversely downward from within the top of the domed cover **12** and has a sleeve bore **15** extending longitudinally there through. The upper end of sleeve bore **15** has a larger diameter end portion **16** and a larger diameter lower end portion **20**. These upper and lower end portions **16** and **20**, respectively, flanking sleeve bore **15** result in the creation of an annular shoulder **18** having a seating surface **19** and a lower surface **17** extending radially inward from sleeve **14** for securing flange **48** of straw housing **40** when the straw housing **40** is assembled within the sleeve **14** as shown in FIGS. **1** and **2**.

Retractable cover **26** is pivotally moveable about an axis **30** over stationary portion **28**. The pivotal arrangement can be achieved by axle pins **37** and **37'** formed on the outside of the stationary portion **28** and reaching into the openings **38** and **38'**, respectively, in the retractable cover **16** or in the

alternative axle pins (not shown) may be formed on the inside of retractable cover **16** and reach into openings formed in stationary portion **28**. Domed cover **12** further comprises a handle **32** for carrying.

Straw housing **40** is preferably, but not necessarily molded from a flexible or elastic material, such as a silicone, and includes a truncated spindle shaft **52** with a smaller diameter elongated neck portion or drinking hose **44** extending from one end of the truncated spindle shaft **52**. A shoulder **56** is formed where the larger diameter truncated spindle shaft **52** terminates into the straw portion **44**. Straw housing **40** further has a flange radiating outwardly from the drinking hose **44** positioned immediately above shoulder **56** and a counter bore **54** that extends axially through the longitudinal length of straw housing **40**. The inner diameter of counter bore **54** is greater in the spindle shaft **52** than within drinking hose **44**. When straw housing **40** is assembled as shown in FIGS. **1** and **2**, the surface **50** of flange **48** bears on seating surface **19** of annular shoulder **18** as the drinking hose **44** of straw housing **40** protrudes through the axial bore **15** in the upper portion of sleeve **14**, and the upper surface **58** of shoulder **56** presses against lower surface **17**. Consequently, the upper seating surface **19** provides longitudinal stability to straw housing **40** in sleeve **14**, while the inner side wall surface **20** of sleeve **14** has an inner diameter which is equal to or greater than the outer diameter of the spindle shaft **52** of straw housing **40** positioned within and is thus capable of providing lateral stability to the straw housing **40** positioned within sleeve **14**. The straw housing **40** is thus journaled for rotation in sleeve **14**, but it is fixed against longitudinal and possibly transverse movement therein.

Straw housing **40** is further supported longitudinally and transversely by inserting the upper end of straw receptor **60** into counter bore **54** of spindle shaft **52** such that the upper surface **66** of straw receptor **60** sits flush with the lower surface **59** of shoulder **58**. The outer diameter of the upper end of straw receptor **60** is equal to or slightly less than the inner diameter of spindle shaft **52** so that when assembled the sidewalls **64** and **46** of straw receptor **60** and spindle shaft **52**, respectively, are flush. The lower end of sidewall **64** gradually flares radially outward until sidewall **68** is formed. Sidewall **68** has an outer radius equal to or slightly less than the inner radius of the inner sidewall surface **20**, of sleeve **14**, and terminates in a radially outward flared flange or rim **62** which fits or locks into an annular groove **22** positioned in sleeve **14**, when straw receptor **60** is inserted into straw housing **40**.

Straw receptor **60** is also preferably, but not necessarily, molded from a rigid plastic material and includes a tapered plug **74** which shares with straw receptor **60** a common axial counter bore **72** extending there through. The outer wall **78** of plug **74** is tapered so that its outer diameter increases from the lower end **75** to the upper end **77**. Consequently, plug **74** will accommodate a variety of straw-like tubing having differing inner diameters. Conversely, the inner diameter of plug **74** decreases from the end **75** to the upper end **77**. Consequently, it will accommodate a variety of straw-like tubing having differing outer diameters. It is this tapered plug **74** in combination with pressure differential valve.**80** which allows the bottle cap **10** of the present invention to be used as a sports mug and this specific use will be described in further detail below.

Pressure differential valve **80** comprises an outer rim **82** which is seated in annular groove **76**, as shown in FIG. **2**, and further held in place by inserting retainer ring **79** into annular groove **76** thus sandwiching outer rim **82** of pressure differential valve **80** into place. The structure and operation of pressure differential valve **80** is fully disclosed in U.S. Pat. No. 5,439,143 which is incorporated herein by reference; however, valve **80** is germane to the operation of the present invention and consequently a fairly detailed discussion of how the valve operates is described below.

In operation, bottle **100** is filled with a liquid and the bottle cap **10** of the present invention is attached preferably by being screwed onto bottle neck **112** of bottle **100**, thus forming an air tight seal. While bottle cap **10** as shown contemplates the use of threads **21** as a means of attaching bottle cap **10** to bottle neck **112**, attachment may be accomplished through a number of other well known conventional manners known in the art, such as, through the use of a snap on lid which utilizes O-rings to form a seal. Once bottle cap **10** is securely attached to bottle neck **112** liquid within bottle **100** may be obtained by opening the retractable cover **26** and then inverting and squeezing bottle **100**.

Referring primarily to FIGS. **2** and **17–19** retractable cover **26** is pivotally mounted about an axis **30** and is arranged on top of the stationary top portion **28** of the domed cover **12**. The pivotal arrangement can be achieved by axle pins **37** and **37N**, formed on the outside of the top portion **28** and reaching into openings **38** and **38N**, respectively, formed in axial alignment in the retractable cover **26**, or visa versa. The retractable cover **26** has a convex and circular shape that matches that of the stationary top portion **28**. Also attached to the retractable cover **26** is a handle **32**. Positioned such that when retractable cover **26** is in the closed position (FIG. **17**) the handle is somewhat perpendicular to the axis **30** thereby allowing the user's fingers to carry the bottle **100**. From the closed position the retractable cover **26** is pivoted to the open position (FIG. **19**) and in doing so the drinking hose **44** stands up by itself.

The first contemplated use of bottle cap **10**, that is, as a replacement for the push-pull valve, is described below. With the retractable cover **26** in the open position the plastic bottle **100** is inverted and water comes in contact with and interfaces with pressure differential valve **80** as shown in FIGS. **4–7**. Pressure differential valve **80** has an integrally formed, one-piece construction. Valve **80** has an interior side **82** which interfaces with the fluid product or water, W in container **100** (FIG. **3**), and an oppositely oriented exterior side **84** which interfaces with channel **81** of bottle cap **10** (shown in FIG. **2**). Valve **80** is preferably molded from a resiliently flexible material, and in the illustrated example comprises a silicone which is substantially inert.

In operation, bottle **100** in combination with bottle cap **10**, functions in the following manner. Valve **80** normally assumes the inwardly protruding orientation illustrated in FIG. **4** wherein valve **80** remains substantially in its original molded shape without deformation, with connector sleeve **87** being fully retracted and discharge opening **86** being fully closed. When valve **80** is mounted in the annular groove **76** of straw receptor **60** as is shown in FIG. **2**, valve **80** is configured such that discharge orifice **86** will remain securely closed, even under the hydraulic head pressure applied thereto by the fluid product W when the bottle **100** is completely full (shown in FIG. **8**).

When bottle **100**, sealed with bottle cap **10** is inverted and squeezed, such as by manually flexing container sidewall **114** inwardly, connector sleeve **87** functions as a rolling diaphragm, and permits valve head **85** to begin shifting axially outwardly toward the straw receptor **60** by doubling over connectors sleeve **87**, which then in turn, begins to extend outwardly in a rolling fashion, as illustrated in FIG.

5. The outwardly protruding J-shaped configuration of connector sleeve **87** assists in initiating this rolling motion of connector sleeve **87**. The elastic deformation of connector sleeve **87** from its original molded shape (FIG. **4**), generates a complex pattern of stresses within valve **80** which resiliently urges the same back into its original or normal configuration, which forces include an outwardly directed torque applied by connector sleeve **87** to valve head **85** adjacent marginal edge **88**, which tends to resiliently urge discharge orifice **86** toward its open position, as described in greater detail below.

When additional pressure is communicated with the interior of container **100**, as illustrated in FIG. **5**, valve head **85** continues to shift axially outwardly by rolling connector sleeve **87** over upon itself. The marginal edge **88** of valve head **85** passes through the center of outer flange **84**.

When additional pressure is communicated with the interior of container **100** valve head **85** continues to shift outwardly (as illustrated in FIG. **5**). However, since connector sleeve **87** is fully extended, further outward shifting of valve head **85** longitudinally tenses or stretches connector sleeve **87**, thereby increasing the outwardly directed torque applied to the valve head **85**. Also, the further outward movement of valve head **85** tends to flatten or straighten valve head **85**, particularly along the exterior surface **84** thereof, as best illustrated in the broken line figure in FIG. **6**. This flattening motion tends to enlarge or dilate the circular plan configuration of valve head **85**, which enlargement is in turn resisted by radially inwardly directed forces applied to the marginal edge **88** of valve head **85** by connector sleeve **87**, thereby generating another complex pattern, of stresses within valve **80**, which forces include those which tend to compress valve head **85** in a radially inward direction. Due to the tapered shape of valve head **85**, the majority of compression strain is believed to take place adjacent the center portion **91** of valve head **85**. As best illustrated by a comparison of the broken line figure and the full line figure provided in FIG. **6**, when connector sleeve **87** is in the fully extended position, as shown in the broken lines, and additional pressure is communicated with the interior side **85** of valve **80**, exterior rim **95** moves axially outwardly and radially outwardly as shown in the full lines of FIG. **6**. The marginal edge **88** of valve head **85** is shown bent or elastically deformed inwardly as a consequence of the torque forces applied thereto by connector sleeve **87**.

When additional pressure is communicated with the interior of container **100**, as illustrated in FIG. **7**, valve head **85** continues to shift outwardly by further longitudinal stretching of connector sleeve **87**, and further enlargement of the plan shape of valve head **85**. This motion is best illustrated by a comparison of the broken line figure and the full line figure provided in FIG. **7**. Exterior rim **95** moved from the condition illustrated in FIG. **6**, which corresponds to the broken line figure of FIG. **7**, in an axially outwardly and radially outwardly fashion to the position shown in the full lines of FIG. **7**. The marginal edge **88** of valve head **85** is shown more bent or elastically deformed inwardly, as a consequence of the increased torque forces applied thereto by connector sleeve **87**. These combined forces and motions also serve to further compress valve head **85** into a state of bifurcation, as illustrated in FIG. **7**, wherein the combined forces acting on valve head **85** will, upon application of any additional outward force on the interior side **85** of valve **80**, cause the same to quickly open outwardly with a snapping motion to separate valve flaps **97** in the manner illustrated in FIG. **7**, and thereby dispense water W through discharge orifice **86**. Water W then flows through channel **81** and out through the top **42** of drinking hose **44**. The bifurcation state of valve **80**, as the term is used herein, is illustrated in FIG. **6**, and defines a relatively unstable condition which valve **80** assumes immediately prior to opening into the fully open condition shown in FIGS. **7** and **8**. As valve **80** passes through the bifurcation state shown in FIG. **6**, the combined forces acting on valve head **85** are in a very temporary, unstable condition of equilibrium for a given moment, and then quickly shift valve head **85** into a generally convex shape, simultaneously opening orifice **86**. In the bifurcation state shown by the full lines in FIG. **7**, valve head **85** assumes the shape of a nearly planar disc, with exterior surface **84** cupped inwardly between rim **95** and flap edges **98**, and interior surface **85** bent slightly outwardly toward the center of orifice **86**.

The snap type opening of valve **80** is achieved, at least in part, by the torque exerted on valve head **85** by connector sleeve **87**, which as noted in the example illustrated in FIG. **7**, is sufficient to substantially distort the shape of the marginal edge **88** of valve head **85**. When valve **80** assumes the fully extended and fully open position illustrated in FIGS. **7** and **8**, valve flaps **97**, as well as the associated rim portion **93** of valve head **85** are bent or elastically deformed outwardly, thereby permitting the rim **94** of valve head **85** to become smaller or constrict slightly. Valve flaps **97** tend to fold openly along lines extending between orifice slits **89** and **90**. The continued radial inwardly compression applied to valve head **85** by connectors sleeve **87**, in addition to the outwardly oriented torque applied thereto by connector sleeve **87**, combine to keep discharge orifice **86** in the fully open position, even if the pressure communicated with the interior of bottle **100** is reduced. Hence, after discharge orifice **86** has been opened through the application of the predetermined opening pressure, that pressure which is required to maintain fluid flow through orifice **86** is reduced, or less than the threshold pressure, so as to provide greater dispensing ease and flow control. Since the resiliency of connecter sleeve **87** serves to resist the dilating action of valve head **85**, and thereby compresses the same to achieve a snap open/snap close motion, if the resiliency of connector sleeve **87** is varied somewhat, such as by making connector sleeve **87** thicker or thinner, the amount or degree of snap action can be thereby adjusted for any specific application. Similarly the resilient strength of ring **86** can be adjusted to accomplish the desired snap action.

The combined compressive and torque forces acting on valve head **85** by connector sleeve **87** open valve flaps **92** to generally predetermined configuration, such that the rate of flow through discharge orifice **86** remains substantially constant, even though significant pressure differences are applied to bottle **100**. As best illustrated in FIGS. **7** and **8**, after valve **80** passes through the bifurcation state shown in FIG. **6**, in the direction of opening, it quickly and positively assumes the fully open condition shown in FIGS. **7** and **8**, wherein the flap edges **98** of valve flaps **97** diverge radially outwardly, such that discharge opening **86** assumes a star shaped plan configuration, as best seen in FIG. **8**. The marginal edge **88** of valve head **85** rotates or pivots inwardly somewhat under the pressure of fluid product W, and the resilient torque applied thereto by connector sleeve **87**, which continues to resiliently urge valve **80** back toward its original molded shape (FIG. **4**). Connector sleeve **87** remains tensed both axially and circumferentially under outwardly directed forces generated by the pressures within bottle **100**, as well as the dynamic flow of fluid product through orifice **86**. The geometry of the illustrated valve **80**, particularly in the shape of valve head **85** and connector

sleeve **87**, serve to force valve **80** into the configuration shown in FIGS. **7** and **8** whenever orifice **86** is snapped opened.

When pressure within the interior of bottle **100** is reduced, discharge orifice **86** will still remain open in substantially the fully open position shown in FIGS. **7** and **8**, until the pressure reaches the preselected closure pressure, at which point, the forces developed in connector sleeve **87** through elastic deformation from its original molded shape (FIG. **4**), pull valve head **85** inwardly, back through the bifurcation state, and into the concave orientation shown in FIG. **6**, thereby positively and securely closing discharge orifice **86** with a snapping action, similar to that action by which discharge orifice **86** opened. The snap closing motion of valve head **85** serves to close orifice **86** very quickly and very completely, so as to sharply cut off the stream of fluid product being dispensed from bottle **100** without any drops or dribbles. Valve **80** will continue to assume the fully closed fully extended position illustrated in FIG. **7**, until such time as the interior pressure in container **86** is further reduced, so as to permit the resiliency in connector sleeve **87** to shift valve head **85** back into the fully retracted, initial position illustrated in FIG. **4**. Concurrently, with the closure of valve **80** air needs to be sucked back into the bottle. The air in this case passes through the air passage **23** which is fitted with a valve **24**, preferably made of silicone or ethylene propylene (for example, "EPDM"). The preferable valve is an umbrella valve, however a number of other types of one way valves may be employed such as, but not limited to, duck bill valves.

The umbrella valve **24** is a one-way valve that remains collapsed flat against the bottom surface **25** of the air passage when the bottle **100** is squeezed, but opens easily as air pushes against it from the opposite direction as the bottle **100** is released. Essentially, it opens the same way an umbrella would inappropriately collapse if pointed away from the wind. Another advantage of the umbrella valve is that it quickly returns air into the bottle so that the user is able to drink rapidly without having to first wait for the air to return through the pressure differential valve **80**, any filter being used or a straw tube if being used. Another advantage of the umbrella valve **24** is that it puts less stress on the bottle. As the bottle's memory returns it to its original shape, it must work against any obstruction in the air pathway.

After use, as shown in FIGS. **17–19**, the user can then pivotally move the retractable cover **26** back to the closed position. In doing so the front edge **33** of retractable cover **26** comes in contact with the drinking hose **44** thereby bending the drinking hose **44** over the barrier **36**. Thus the drinking hose **44** is closed with a relatively sharp bend therein. Drinking hose **44** is measured such that it has a length for fitting within the groove **39** in closed domed cover **12**. To ensure that the retractable cover **26** is securely closed, a protrusion, or bump **34** (FIG. **1**) is arranged on the leading edge of retractable cover **26** so that as retractable cover **26** is closed protrusion **34** snaps over a reciprocal protrusion **35** located on the base of bottle cap **12**. Thus, bottle cap **10** can be opened and closed without the user's hands or fingers coming into contact with the drinking hose **44**.

The alternative manner of using the bottle cap **10** of the present invention is to convert bottle cap **10** for use as a sports mug having a straw-like tubing. Prior to attaching bottle cap **10** to bottle **100** a straw **200** (shown in FIGS. **9** and **10**) is threaded through the valve head **85** of pressure differential valve **80** and attached to the tapered plug **74** of straw receptor **60**. In the particular embodiment shown in FIG. **9** the tapered plug **74** is inserted into the inner diameter of straw **200** and straw **200** is further secured by being wedged or pinched between the inner wall **71** of straw receptor **60** and the outer wall **78** of tapered plug **74**. Valve flaps **98** hug the outer circumference of straw **200** thereby forming a seal around straw **200**. In an alternative embodiment a straw having an outer diameter which is less than the outer diameter of tapered plug **74** can be inserted into the inner diameter of tapered plug **74**. As discussed previously, the inner diameter of tapered plug **74** gradually decreases; consequently, as a straw is inserted within tapered plug **74** a friction fit is created thereby securing the straw. Pressure differential valve **80** is now deactivated by straw **200** and bottle cap **10** may be secured onto bottle **100**. The user may then apply suction to the end of drinking hose **44** and draw liquid up and out of bottle **100**.

Referring to FIGS. **11–16**, there are shown several, but not the only, embodiments of the bottle cap **10** of the present invention used in combination with a water filter. The water filter may be either installed in a bottle neck **312** (FIGS. **11–13**), attached to a straw **400** for use in a bottle **100** (FIG. **14**), attached directly to the straw receptacle **460** as shown in FIG. **15**, or attached to sleeve **14**. FIGS. **11–13** illustrate the filter **300** sealed in the neck **312** of a "typical sport" bottle **100**. This preferred filter **300** is disclosed in U.S. Pat. No. 5,840,185 and is incorporated herein by reference.

Referring to FIGS. **11–13**, the filter cartridge **300** comprises a media containment means, which is a generally-cylindrical cup **312** having a side wall **314**, a bottom wall **316**, and a lid **318**. The upper portion **320** of the cup **312** acts as a securing means for holding the cup and media in a generally fixed position in the sports bottle once the bottle cap is installed. The upper portion **320** comprises a generally axial upending wall **322** and a generally radial flange **324** extending away from the axial centerline of the cup **312**.

In use, water filter media **326** is placed inside the interior space of the cup **312**. The filter media **326** may include solid, granular, or other materials. Conventional media support material, such as felt pads or mesh (not shown), may be included inside the cup **312** to support and/or contain the media.

The cup bottom wall **316** and lid **318** preferably have apertures for allowing water flow into and out of the interior space **328**. Alternatively, other apertures besides the plurality of holes **330** may be included in the bottom wall **316** and the lid **318**. For example, the bottom wall and lid may be formed of screen or other water-permeable material.

In use, the generally cylindrical cartridge **300** fits into the generally cylindrical neck **312** of the sports bottle **100**, and is held in the bottle **100** by the cooperation of the flange **324** resting on bottle lip **304**, shown in FIG. **12**. Typically, the bottle is prepared for use by removing the bottle cap **10** and filter cartridge of the present invention, filling he bottle body **106** with water, inserting the cartridge **300** into the neck **302** and replacing the bottle cap **10** on the bottle. When the bottle **100** is tipped up for drinking, the water in the body **106** of the bottle flows through the bottom wall **316**, through the media **326**, out from the lid **318**, and through channel **81** into the user's mouth.

The cartridge **300** (as discussed in detail in U.S. Pat. No. 5,840,185) is specially designed to cooperate with the bottle neck **312** and cap **10** to allow a water-tight seal between bottle neck **312**, cartridge **300**, and bottle cap **10** without requiring modification of the bottle **100** or cap **10**. Several features particularly contribute the seal: the angle of the inner surface **334** of the upending wall **322**, the thinness of the upending wall **322** at the connection between wall **322**

and flange **324**, the expandability of the upper wall **322**, and the flexibility of the typical cap annular valve **362**. First, the inner surface **334** of the upending wall **322** is formed at an angle of **10'–20'** (preferably about 15') from vertical, or, in other words, about 15' from parallel to the longitudinal centerline of the bottle mouth and neck **312**. Secondly, the upending wall preferably transitions from a thickness of about 0.062 inches to a thickness of preferably less than about 0.03 inches (preferably about 0.022 inches) in the region of the inner surface **334**, so that only a thin wall rests between the cap annular valve seal **362** and the bottle neck. Thirdly, the upper portion **320** of the cup **312** is made of an expandable material such as high density polyethylene (HDPE) plastic or polypropylene, which allows the upending wall **322** to flex outward slightly as the bottle cap **10** is installed. Fourthly, the typical cap annular valve seal **362**, protruding downward from the bottle cap **10** underside, is slightly flexible. Therefore, as the cap's annular valve seal **362** comes down and meets the upending wall **322**, the annular valve seal **362** contacts the slanted inner surface **334** and is deflected slightly inward, by about 1/100 inch, and the upending wall **322** is slightly deflected outward towards the neck **352**. Thus, the bottle cap **10** may be screwed down or otherwise lowered almost to the extent that it could be if the cartridge **300** were not in place.

When the bottle cap **10** is installed, as shown in FIG. **13**, the flange **324** lies in between the cap and the lip **354** of the neck **352**, and the upending wall **322** is positioned in between the side of the lip **354** and the annular valve seal **362**. Thus, a tight seal is created by contact of the lip side surface **366** with the upending wall outer surface **336**, and contact of the upending wall inner surface **334** with the outer surface **368** of the annular valve **362**. Alternatively, the bottom surface of the flange **367** may seal against the lip top surface **369** to create or contribute to the neck-cartridge seal

The flange **324** outer circumference is preferably slightly larger than the outer circumference of the lip **354**. This creates a slightly overhanging edge to grasp with one's fingertips for removing the filter cartridge **300** from the bottle.

A slight draft in the manufacture of the cup side wall **314** is preferable for making the side wall **314** taper to a slightly smaller diameter at the wall bottom than the wall top. Especially in long-neck or narrow-neck bottle designs, this draft, preferably about 2–3 degrees, permits air to reach into the space between the cup side wall and the bottle inner wall, thus, making easier the insertion and removal of the filter cartridge.

Alternatively, other media containment means may be used besides the cup **312**, for example, containment means that do not completely surround the media, but rather encircle or attach to media. For example, in the case of solid carbon block of media, the containment means could be an open ended cylinder or ring around the circumference of a cylindrical carbon block. A securing means such as the upper portion **320** may be attached to, or extend integrally up from, the cylinder or ring to secure the carbon block and cylinder or ring in the bottle.

In use in a plastic bottle neck, the filter **300** is inserted into the bottle neck as shown in FIGS. **11–13** and as described above. As the plastic bottle **100** is squeezed, water is purified as it is forced through the filter wall of the carbon block. As the user releases the bottle, it remembers its original shape and attempts to return to that shape. In doing so, the bottle sucks in air from the atmosphere. The air in this case passes through the straw tube and down through the center passage **328** and down to the bottom of the filter housing body **320**, where it exits through an umbrella valve **370**, preferably made of silicone or ethylene propylene (for example, "EPDM").

The umbrella valves **325** and **370** are one-way valves that remain collapsed flat against the bottom surfaces of air vent **326** and of the filter housing body when the bottle is squeezed, but opens easily as air pushes against it from the opposite direction. The use and position of this umbrella valve enables the carbon block filter **324** to be made with a is much tighter median pore diameter than it would if the path of air return were to self vent through the carbon block filter wall.

Another advantage of the umbrella valves are they allow for the quick return of air into the bottle **100** so that the user is able to drink rapidly without having to first wait for the air to return through the filter itself, known as self venting, and, second, to have to squeeze the water back into the carbon block pores each and every time another drink is taken. Another advantage of the umbrella valves **325** and **370** is that less stress is put on the pressure differential valve **380** and on the bottle **100** as a result of the quick return of air. As the bottle's memory returns it to its original shape, it must work against any obstruction in the air pathway. If the air were forced to return through the wall of the carbon block, it would put greater stress on the pressure differential valve **380** and plastic bottle **100**.

FIGS. **14** and **15** demonstrate yet another method of filtering the liquid when the pressure differential valve **480** has been deactivated for use as a sports mug. A filter **410** similar to the one described previously and disclosed in detail in U.S. Ser. No. 08/988,864 which is incorporated herein by reference may be utilized. In use as a "loose" filter for purifying liquid in the sports mug configuration the stem **472** or other straw attachment port of the housing top is pushed into the end of a straw **400** (FIG. **14**) and the combined straw-filter unit may be placed inside the bottle **100**. Alternatively, the stem **472** of filter **410** may be inserted into the straw receptor **460** (FIG. **15**) thereby deactivating pressure differential valve **80** the stem **472** of the filter lid which perforates the valve. As the user sucks on the drinking hose **444**, the umbrella valve **470** flattens more firmly against the surface of the filter housing, so that the water flows through the inlets **474** in the housing body. For "air return," in an embodiment as shown in FIG. **14**, air simply returns through the air vent **423** as discussed previously. In any case, when in use with a straw, the filter **410** may not need to provide for an air return.

In either inverted bottle-use or cup/mug use, the filter housing serves several functions. It cosmetically covers the carbon block, protects the carbon block, and provides a means for holding the carbon block in place in the bottle neck. In addition, the filter housing also serves to define the water inlet points and to direct water and air flow. The preferable placement of the water inlets **74** is near the bottom of the housing body. These perforations in the housing body are in any variety of vents or openings, and maybe additionally located at the top of the housing body as well for use in the alternate embodiment. In this way, when the filter is used in the water inlets **74** are used in the bottom of a mug or cup, nearly all the liquid may be sucked up through the straw via the lower vents.

Additionally, as shown in FIG. **15**, the filter **10'** has an annular gap between **476** between the top portion **478** of housing **410** and the lower portion **480** which allows for passage of water when the bottle is inverted and plugged into

the cap. When in a cup or mug, little or no air passes through the angular gap **410** and through the carbon filter even when the liquid level is below the angular gap **410** and so little or no effect of the angular gap **410** is noticed in the straw application and water is drawn up through vent **474**.

FIG. **16** demonstrates an alternative embodiment of attaching filter **600** to bottle cap **10** of the present invention. A second angular groove **623** may be created below annular groove **622** for receiving flange **667** and holding filter **600** firmly in place. Alternatively, the top surface **668** of flange **667** may be affixed to the lip **615** of sleeve **614** by adhesives of welding such as spin welding.

The foregoing description is considered as illustrative only of the principles of the invention. The words "comprise," "comprising," "include," "including," and "includes" when used in this specification and in the following claims are intended to specify the presence of one or more stated features, integers, components, or steps, but they do not preclude the presence or addition of one or more other features, integers, components, steps, or groups thereof. Furthermore, since a number of modifications and changes will readily occur to those skilled in the art, it is not desired to limit the invention to the exact construction and process shown described above. Accordingly, all suitable modifications and equivalents may be resorted to falling within the scope of the invention as defined by the claims which follow.

The embodiments of the invention in which an exclusive property or privilege is claimed are defined as follows:

1. A bottle cap for liquid-holding containers comprising:

a main body having a bottom part for closing a container opening and a top part having, a first bore hole for receiving a straw housing, a second closable, air admitting bore hole, a sleeve bore in axial alignment with said first bore hole, said sleeve bore receiving said straw housing, and a two-way valve in fluid communication with said straw housing, wherein said straw housing has a first end, a second end and an axial bore wherein said first end has an outer diameter which is equal to or less than the diameter of said first bore hole and which is less than the outer diameter of said second end, wherein said first end extends through said first bore hole and said second end is received by said sleeve bore.

2. The bottle cap of claim **1**, wherein said sleeve bore receives said two-way valve.

3. The bottle cap of claim **1**, wherein said second end of said straw housing receives a straw receptor having a first end and a second end and an axial bore wherein said first end has a sleeve having a top end and a bottom end protruding downward which further shares said axial bore.

4. The bottle cap of claim **3**, wherein said sleeve has an outer sidewall and an inner sidewall wherein said top end is connected to said first end of said straw housing and the outer sidewall from the top end to said bottom end tapers inward toward the axis of said axial bore.

5. The bottle cap of claim **4**, wherein said inner sidewall of said sleeve from said top end to said bottom end gradually tapers away from the axis of said axial bore.

6. The bottle cap of claim **5**, wherein positioned adjacent to said second end of said straw receptor is said two-way valve.

7. The bottle cap of claim **6**, wherein said two-way valve is positioned within said second end of said straw receptor.

8. The bottle cap of claim **7**, wherein a straw having a first and second end is threaded through said two-way valve and said first end is attached to said sleeve.

9. The bottle cap of claim **8**, wherein said second end of said straw is attached to a filter.

10. The bottle cap of claim **7**, wherein a filter is attached directly to said straw receptor.

11. The bottle cap of claim **10**, wherein said filter is attached to said sleeve.

12. The bottle cap of claim **7**, wherein a filter is threaded through said two-way valve and is attached to and seals said sleeve.

13. A drinking closure device for liquid-holding containers comprising

(1) a main body having
  (i) a bottom part for closing a container opening and
  (ii) a top part defining a first and second bore hole wherein said first bore hole is in axial alignment with a sleeve;

(2) a straw housing wherein said straw housing has a first and second end and a counter bore in axial alignment with said first bore hole and said first end has an outside diameter equal to or less than the diameter of said first bore hole and said second end of said straw housing has an outside diameter that is greater than the diameter of said first bore hole wherein said sleeve receives and secures said straw housing; and

(3) a straw receptor having a top and bottom end and a bore there through wherein said straw receptor is positioned within said second end of said straw housing so that said bore is in axial alignment with said counter bore of said straw housing and said top end comprises a sleeve protruding toward said bottom end and said bottom end receives a two way valve and contacts said sleeve of said main body.

* * * * *