US 20050029271A1

(19) United States

(12) Patent Application Publication

McDonough

(10) Pub. No.: US 2005/0029271 A1

(43) Pub. Date: Feb. 10, 2005

(54) STRAW DRINKING CUP

(76) Inventor: **Justin E. McDonough**, Hillsborough, NJ (US)

Correspondence Address:
KNOBLE & YOSHIDA, LLC
Suite 1350
Eight Penn Center
1628 John F. Kennedy Blvd.
Philadelphia, PA 19103 (US)

(21) Appl. No.: **10/637,228**

(22) Filed: **Aug. 8, 2003**

Publication Classification

(51) **Int. Cl.**[7] **A47G 19/22**

(52) **U.S. Cl.** **220/709**; 220/705; 239/33

(57) **ABSTRACT**

A straw drinking cup includes a container and a flexible straw having a first, drinking, end and a second and that is disposed within the container. Advantageously, the cup includes a straw positioning mechanism that ensures that the first, drinking end of the flexible straw will remain upwardly oriented to minimize the possibility of leakage, regardless of whether the straw positioning mechanism is in the open position, the closed position, or in transit between the two positions. The straw drinking cup further includes an advantageous venting mechanism that includes a flexible membrane that permits air to flow into the container only when a sufficient pressure differential is developed across the membrane, such as will occur when a consumer is sucking on the flexible straw. The venting mechanism further operates so as to prevent leakage from the container, as sufficient pressure will not exist to draw any liquid across the flexible membrane.

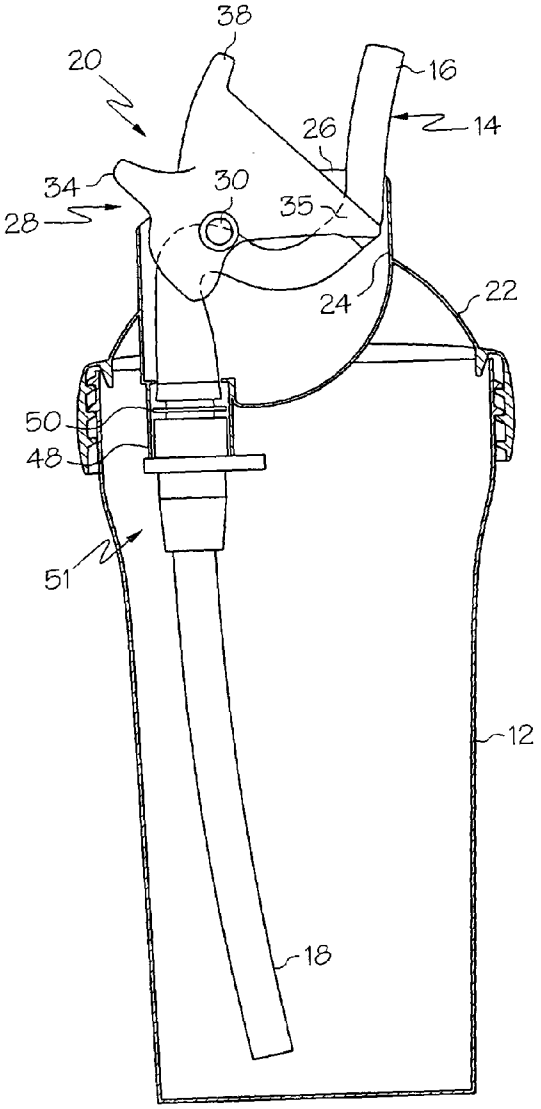

FIG. 1

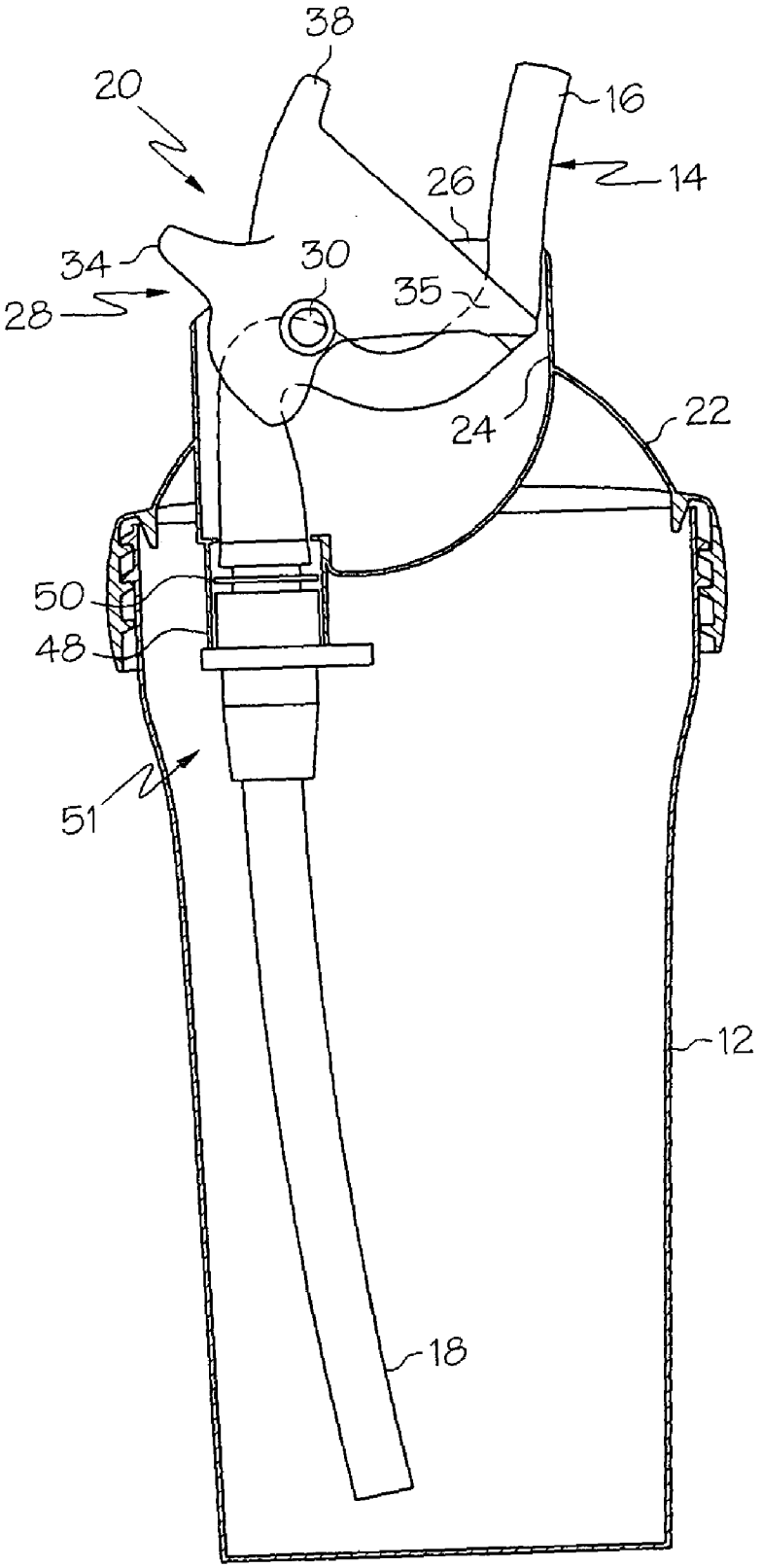

FIG. 2

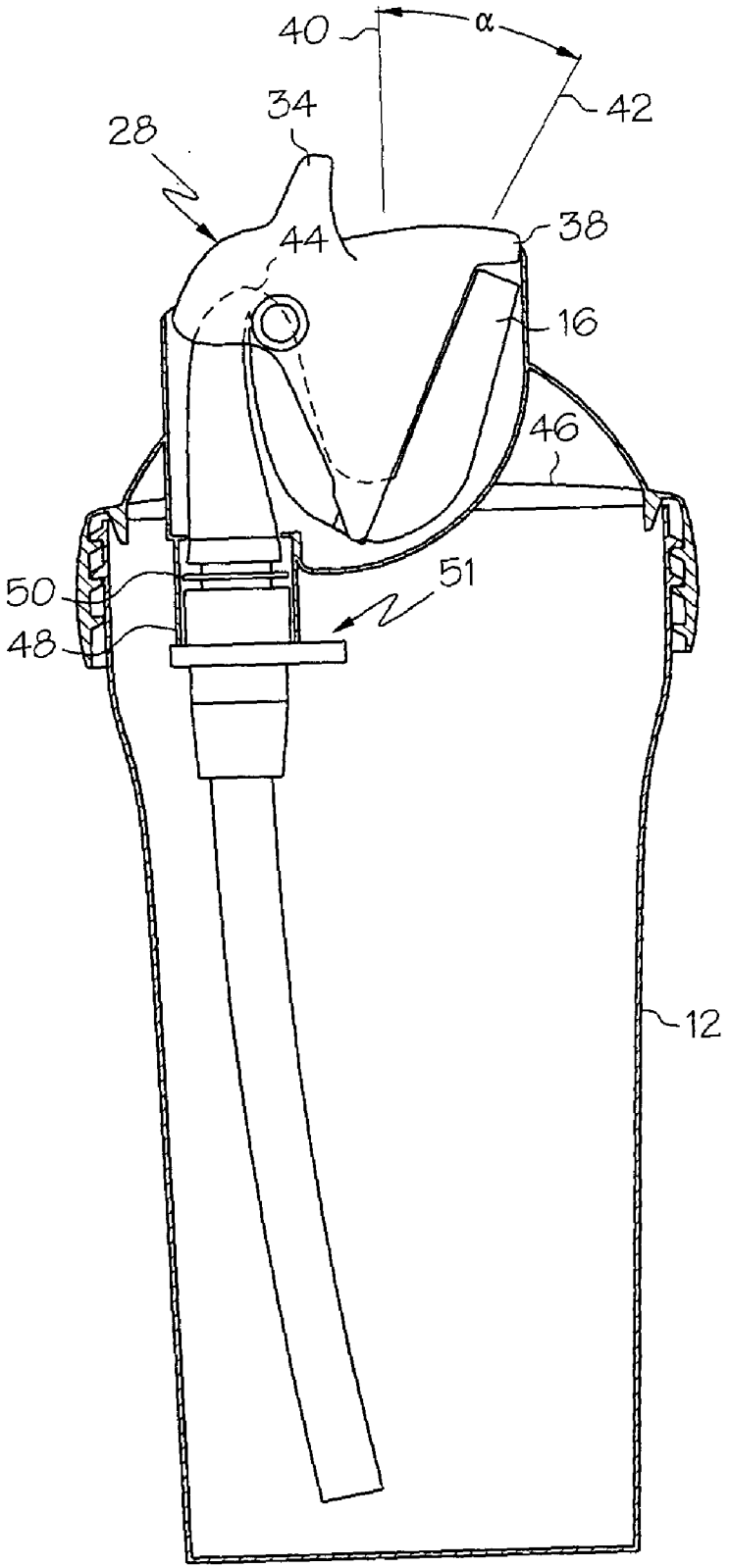

FIG. 3

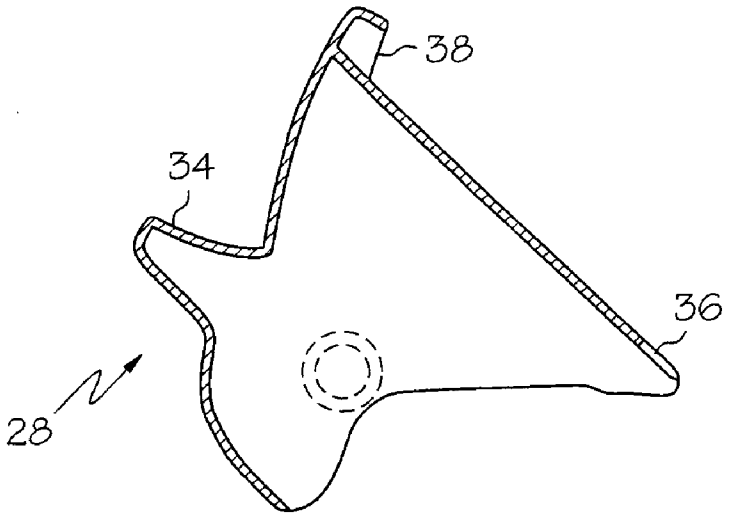

FIG. 4

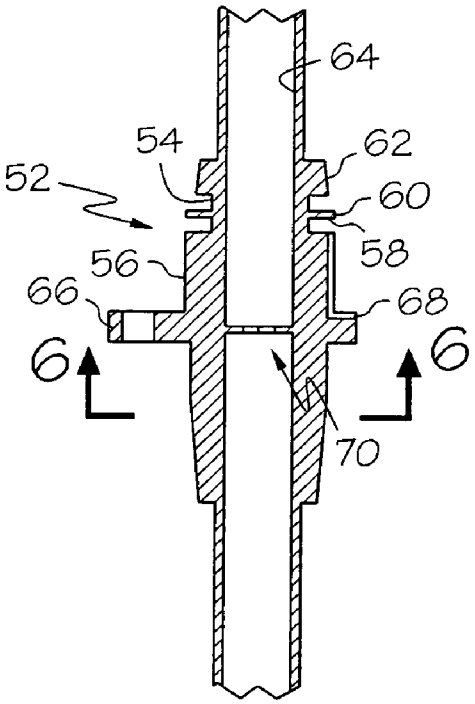

FIG. 5

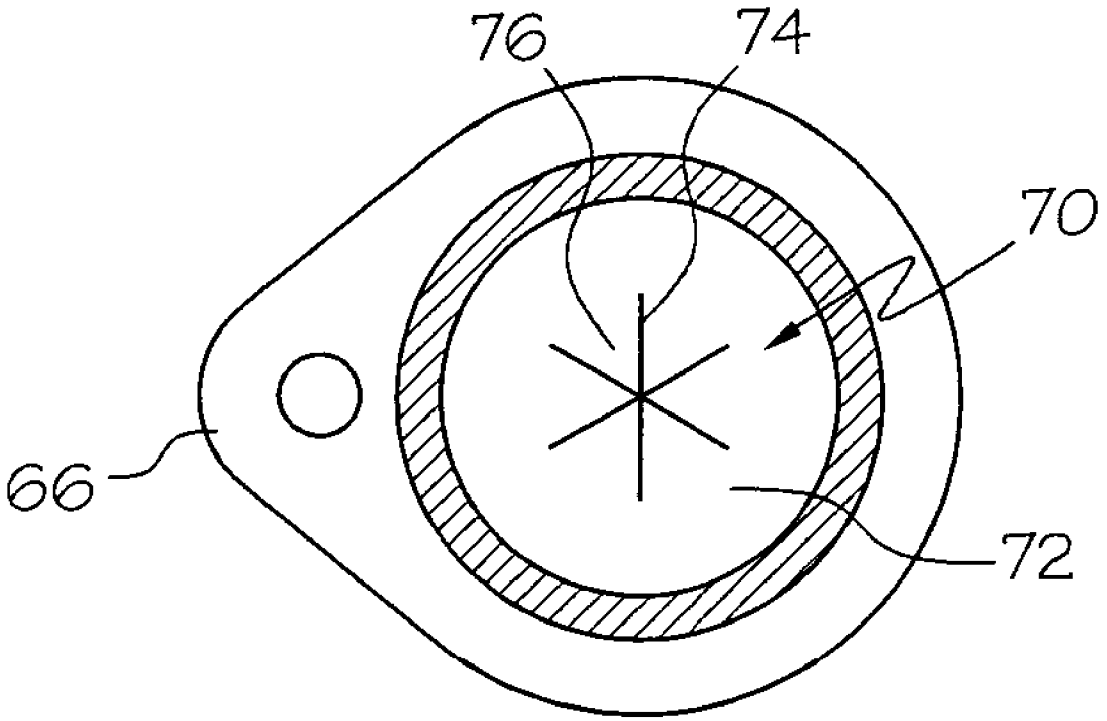

FIG. 6

STRAW DRINKING CUP

BACKGROUND OF THE INVENTION

[0001] 1. Field of the Invention

[0002] This invention relates broadly to sealed drinking containers for serving beverages, especially to small children and individuals who are disabled. More specifically, this invention relates to an improved straw drinking cup of the type including a closed container and a flexible straw that is in communication with an interior of the container.

[0003] 2. Description of the Related Technology

[0004] A number of straw drinking cups are commercially available and described in the patent literature. For example, U.S. Pat. No. 5,273,172 to Rossbach et al. describes a straw drinking cup that includes a pivotally movable cap that will contact, deflect, bend and cover a flexible drinking straw when it is closed. In order to permit replacement air to enter the cup during drinking, a separate borehole is defined in the cap of the Rossbach et al. design. A similar design is disclosed in U.S. Pat. No. 5,897,013 to Manganiello, which includes supplemental structure for correctly orienting the rotational position of the flexible drinking straw.

[0005] One problem that tends to afflict conventional straw drinking cups is leakage of the beverage that commonly occurs from the flexible draining straw and from the container itself. Leakage from the container typically occurs through the venting holes that are provided to allow replacement air into the container during draining. Leakage from the flexible draining straw typically will occur as the straw is bent over during the closing of the cap. As the drinking end of the straw becomes inverted and points downwardly, residual liquid that is in the straw will of course tend to flow downwardly and leak onto the cap structure. Besides being messy and unsightly, such leakage may contribute to bacterial colonization in the affected area.

[0006] A need exists for an improved straw drinking cup design that is less susceptible to leakage during use.

SUMMARY OF THE INVENTION

[0007] Accordingly, it is an object of the invention to provide an improved straw drinking cup design that is less susceptible to leakage during use.

[0008] In order to achieve the above and other objects of the invention, a straw drinking cup that is constructed according to a first aspect of the invention includes a container; a flexible straw having a first end and a second end; and a straw positioning mechanism for positioning the flexible straw with respect to the container, the straw positioning mechanism being movable between a first operative position wherein the first end of said flexible straw is presented for sipping by a consumer and a second storage position, and wherein the straw positioning mechanism is constructed and arranged so that the first end of the flexible straw is upwardly oriented when in the second storage position, whereby spillage from the first end of the flexible straw is minimized.

[0009] According to a second aspect of the invention, an apparatus for serving a beverage includes a container, a first passage in communication with the container for serving a beverage from the container; a second, venting, passage that is in communication with the container; and a flexible membrane interposed in the second passage, the flexible membrane being constructed and arranged to permit air to flow through the second passage when a predetermined pressure differential is developed across the flexible membrane.

[0010] According to a third aspect of the invention, a straw drinking cup includes a container; a flexible straw having a first end and a second end, the flexible straw having an integral valve defined therein; and a straw positioning mechanism for positioning the flexible straw with respect to the container, the straw positioning mechanism being movable between a first operative position wherein the first end of the flexible straw is presented for sipping by a consumer and a second storage position.

[0011] According to a fourth aspect of the invention, a flexible straw assembly includes a flexible straw having a first end and a second end, an outer wall and an inner wall defining a lumen; and an integral valve positioned within said flexible straw for impeding fluid flow through said lumen unless a pressure differential is applied thereto.

[0012] These and various other advantages and features of novelty that characterize the invention are pointed out with particularity in the claims annexed hereto and forming a part hereof However, for a better understanding of the invention, its advantages, and the objects obtained by its use, reference should be made to the drawings which form a further part hereof, and to the accompanying descriptive matter, in which there is illustrated and described a preferred embodiment of the invention.

BRIEF DESCRIPTION OF THE DRAWINGS

[0013] **FIG. 1** is a perspective view of a straw drinking cup that is constructed according to a preferred embodiment of the invention;

[0014] **FIG. 2** is a partial cross-sectional view of the straw drinking cup shown in **FIG. 1**, shown in a first operational position;

[0015] **FIG. 3** is a partial cross-sectional view depicting a second operational position;

[0016] **FIG. 4** is a cross-sectional view through one component of the straw drinking cup;

[0017] **FIG. 5** is a fragmentary cross-sectional view through another component of the straw drinking cup; and

[0018] **FIG. 6** is a cross-sectional view taken along lines **6-6** in **FIG. 5**.

DETAILED DESCRIPTION OF THE PREFERRED EMBODIMENT(S)

[0019] Referring now to the drawings, wherein like reference numerals designate corresponding structure throughout the views, and referring in particular to **FIG. 1**, a straw drinking cup **10** that is constructed according to a preferred embodiment of the invention includes a container **12** and a flexible elastomeric straw **14** having a first, drinking end **16** and a second end **18** that is positioned within the container **12**, as shown in **FIG. 2**. Straw drinking cup **10** further includes a straw positioning mechanism **20** for positioning the flexible straw **14** with respect to the container **12**

between a first drinking position, shown in **FIG. 2**, and a second storage position, shown in **FIG. 3**. Most advantageously, and as will be described in greater detail below, the straw positioning mechanism **20** is constructed and arranged so that the first end **16** of the flexible straw **14** is upwardly oriented in the second storage position, and furthermore remains upwardly oriented during the entire range of movement between the first drinking position and the second storage position. Accordingly, liquid within the flexible straw **14** will not at any point be induced to flow downwardly out of the drinking end **16** to become trapped at any location in the drinking cup **10**.

[**0020**] Referring now to **FIG. 2**, it will be seen that container **12** is constructed so as to including a lid **22** that is screwable onto the main body portion of the container **12** and that has an upstanding wall **23** defining a space for receiving the straw positioning mechanism **20**. Upstanding wall **23** has an inner surface **24** that is positioned, as may be seen in **FIG. 2**, to be frictionally engaged by the outer surface of the flexible straw **14** as the straw positioning mechanism **20** is moved between the first and second positions. This frictional engagement provides a controlled feel to the consumer during movement of the straw positioning mechanism **20**. Upstanding wall **23** defines a portion of an opening **26** that is provided in the lid **22**. Opening **26** is further defined by a downwardly extending, tube-like projection **48** having an inner surface **50** that defines a passage through which the flexible straw **14** extends, as will be described in greater detail below.

[**0021**] As may best be seen in **FIGS. 2 and 3**, straw positioning mechanism **20** is preferably embodied as a straw positioning member **28** that is pivotally mounted to the lid **22** and is substantially positioned within the opening **26** that is defined by the upstanding wall **23**. Straw positioning member **28** includes a pair of axle projections **30** that are journaled into a corresponding pair of holes **32** that are defined in the upstanding wall **23**, as shown in **FIG. 1**. Straw positioning member **28** preferably includes finger-gripping structure **34** for facilitating movement of the straw positioning member **28** by a consumer. In the preferred embodiment, finger-gripping structure **34** is an upstanding projection that may be contacted and pushed one way or another by a finger or a thumb of a consumer. Straw positioning member **28** preferably includes a downwardly extending arm **35** that has a recess **36** defined at its distal end for receiving the flexible straw **14**. When the straw positioning mechanism **20** is in the second, closed position shown in **FIG. 3**, the flexible straw **14** will be bent into a horizontal S-shaped configuration by the downwardly extending arm **35** so as to be crimped in a first location **44** and also in a second location **46** that is adjacent to the recess **36**. This minimizes the potential for leakage through the flexible straw **16** in the storage position, especially in conjunction with the venting mechanism **51** that will be described in greater detail below.

[**0022**] The inner surface **64** of the flexible straw **14** defines a first passage that is in communication with the container **12** for serving a beverage from the container **12**. In operation, a consumer will suck on the draining end **16** of the flexible straw **14**, which will induce a pressure differential between the drinking end **16** and the second end **18** of the flexible straw **14**. This, in turn, will draw the beverage upwardly through the flexible straw **14** into the mouth of the consumer. As may be seen in **FIG. 5**, which is a cross-sectional depiction of a portion of the flexible straw **14** that is part of the venting mechanism **51**, the flexible straw **14** is circumferentially enlarged for a portion of its length into a plug portion **52** that has an outer surface **56** that is shaped and sized to fit snugly against the inner surface **50** of the tube-like projection **48** that partly defines the opening **26** in the lid **22** of the container **12**. A number of longitudinal grooves **62** are defined in the plug portion **52** and together define a second, venting passage that is also in communication with the interior of the container **12**. In the preferred embodiment, three longitudinal grooves **62** are provided in the plug portion **52** and are spaced evenly about the periphery of the plug portion **52**. In the preferred embodiment, the lower end of the plug portion **52** is formed as a flange that includes a pull tab **66** for removing the flexible straw **14** from the lid **22**. One or more radial grooves **68** are preferably defined in the upper face of the flange to insure adequate communication of the longitudinal grooves **62** with the interior of the container **12**.

[**0023**] As may be seen in **FIG. 5**, an annular recess **54** is defined in the plug portion **52**, and a radially extending flexible membrane **58** is disposed in the annular recess **54**. Flexible membrane **58** is sized so that its outer edge **60** will contact the inner surface **50** of the tube-like projection **48**, thereby forming a seal that will, in the absence of a sufficient pressure differential to deflect the flexible membrane **58**, prevent passage of air or liquid through the second passage or the individual longitudinal grooves **62**. The flexible membrane **58** is engineered so that when a pressure differential of the magnitude that would be developed by a consumer sucking on the drinking end **16** of the flexible straw **14** is developed across the flexible membrane **58**, the flexible membrane **58** will deflect, permitting replacement air to flow through the longitudinal grooves **62** and into the container **12**. However, when the straw drinking cup **10** is not in use the flexible membrane **58** will act as a closed valve to prevent both air and liquid from escaping from the container **12**.

[**0024**] Referring now to **FIGS. 5 and 6**, it will be seen that an integral internal valve **70** is further positioned within the flexible straw **14** for impeding fluid flow through the flexible straw **14** until a pressure differential of the magnitude that would be developed by a consumer sucking on the drinking end **16** of the flexible straw **14** is developed across the internal valve **70**. As is best shown in **FIG. 6**, integral internal valve **70** is preferably constructed as an internal membrane **72** that is positioned across the lumen that is defined within the flexible straw **14**. Internal membrane **72** is preferably molded with the flexible straw **14** so as to be unitary therewith. A plurality of slits **74** is defined within the internal membrane **72** in order to define a corresponding plurality of flap members **76**. Flap members **76** are sized and shaped so as to deflect when a pressure differential of sufficient magnitude is applied across the internal membrane **72**, thereby permitting fluid to flow through the internal valve **70**.

[**0025**] The entire flexible straw **14**, including the venting mechanism structure that is depicted in **FIG. 5** and the internal valve **70**, is preferably of unitary construction, and is preferably fabricated from a resilient elastomeric material such as silicone.

[**0026**] By crimping the flexible straw **14** in two different positions and through the provision of the flexible mem-

brane **58** in the venting structure, straw drinking cup **10** is provided with triple redundancy against leakage when the straw positioning mechanism **20** is in the closed position. The flexible straw **14** will also tend to function as a toggle spring as the straw positioning mechanism **20** is moved between the two operative positions, as may be visualized in **FIGS. 2 and 3**. Because of the symmetrical construction of the flexible drinking straw **14**, there is further no need to orient the flexible drinking straw **14** relative to the lid **22** during assembly.

[**0027**] When the straw drinking cup **10** is in the opening, drinking position, the unique orientation of the flexible straw **14** creates a flowpath that never allows both ends of the flowpath to be below the water level at any cup orientation. This, therefore, minimizes the potential of static leakage through the straw **14** in the open position, even in the event of valve failure. The flexible straw **14** in conjunction with the pivotal straw positioning structure **28** further provides a positive interlocking arrangement for positioning the straw **14**, while minimizing the complexity of assembly with the other components.

[**0028**] It is to be understood, however, that even though numerous characteristics and advantages of the present invention have been set forth in the foregoing description, together with details of the structure and function of the invention, the disclosure is illustrative only, and changes may be made in detail, especially in matters of shape, size and arrangement of parts within the principles of the invention to the full extent indicated by the broad general meaning of the terms in which the appended claims are expressed.

1. A straw drinking cup, comprising:

a container;

a flexible straw having a first end and a second end; and

a straw positioning mechanism for positioning said flexible straw with respect to said container, said straw positioning mechanism being movable between a first operative position wherein said first end of said flexible straw is presented for sipping by a consumer and a second storage position, and wherein said straw positioning mechanism is constructed and arranged so that said first end of said flexible straw is upwardly oriented when in said second storage position, whereby spillage from said first end of said flexible straw is minimized.

2. A straw drinking cup according to claim 1, wherein said straw positioning mechanism is further constructed and arranged so that said first end of said flexible straw remains continuously upwardly oriented when said straw positioning mechanism is moved between said first and second storage positions.

3. A straw drinking cup according to claim 1, wherein said first end of said flexible straw is upwardly oriented when in said second storage position at an angle that is 60 degrees or less divergent from a longitudinal axis of said container.

4. A straw drinking cup according to claim 3, wherein said first end of said flexible straw is upwardly oriented when in said second storage position at an angle that is 45 degrees or less divergent from a longitudinal axis of said container.

5. A straw drinking cup according to claim 1, wherein said container comprises a lid having an opening defined therein, and said straw positioning mechanism comprises a straw positioning member that is pivotally mounted to said lid and is disposed in said opening.

6. A straw drinking cup according to claim 5,wherein said straw positioning member includes finger gripping structure for facilitating movement of said straw positioning member by a consumer.

7. A straw drinking cup according to claim 5,wherein said straw positioning member has a recess defined therein for receiving said flexible straw.

8. A straw drinking cup according to claim 5,wherein said straw positioning member further includes a protective shelf portion for precluding external contact with said first end of said flexible straw when said straw positioning mechanism is in the second storage position.

9. A straw drinking cup according to claim 5, wherein said lid comprises an internal sidewall that at least partially defines said opening, and wherein said straw positioning mechanism is constructed and arranged to slide a portion of said flexible straw over said internal sidewall when said straw positioning mechanism is moved between said first and second storage positions.

10. A straw drinking cup according to claim 5, wherein said straw positioning member has a recess defined therein for receiving a bent portion of said flexible straw when said straw positioning mechanism is in said second storage position.

11. A straw drinking cup according to claim 1, wherein said straw positioning mechanism is constructed and arranged so as to crimp said flexible straw in at least two places when said straw positioning mechanism is in the second, closed position.

12. A straw drinking cup according to claim 1, wherein said straw positioning mechanism is constructed and arranged so as to be biased for movement in at least one direction by elastic deformation of said flexible straw.

13. A straw drinking cup according to claim 12, further comprising a venting mechanism, said venting mechanism being constructed and arranged to permit air to flow into the container without permitting liquid to escape therethrough.

14. An apparatus for serving a beverage, comprising:

a container;

a first passage in communication with said container for serving a beverage from said container;

a second, venting, passage that is in communication with said container; and

a flexible membrane interposed in said second passage, said flexible membrane being constructed and arranged to permit air to flow through said second passage when a predetermined pressure differential is developed across said flexible membrane.

15. An apparatus for serving a beverage according to claim 14, wherein said first passage comprises a flexible straw that is inserted into the container through an opening that is defined in the container.

16. An apparatus according to claim 15, wherein said flexible membrane is integral with said flexible straw.

17. An apparatus according to claim 15, wherein said second, venting passage comprises a space that is defined between an outer surface of said flexible straw and said opening that is defined in the container.

18. An apparatus according to claim 17, wherein said flexible straw comprises a circumferentially enlarged plug portion for securely fitting within said opening that is defined in said container, and wherein said second, venting passage comprises at least one longitudinal groove that is defined in an outer surface of said plug portion.

19. An apparatus according to claim 18, further comprising an annular recess that is defined in said circumferentially enlarged plug portion, and wherein said flexible membrane is positioned as a radially extending projection within said annular recess, said flexible membrane having a radially outer edge that is sized so as to contact a sidewall defined in said opening in said container.

20. An apparatus according to claim 18, wherein said second, venting passage comprises a plurality of said longitudinal grooves.

21. A straw drinking cup, comprising:

a container;

a flexible straw having a first end and a second end, said flexible straw having an integral valve defined therein; and

a straw positioning mechanism for positioning said flexible straw with respect to said container, said straw positioning mechanism being movable between a first operative position wherein said first end of said flexible straw is presented for sipping by a consumer and a second storage position.

22. A straw drinking cup according to claim 21, wherein said flexible straw and said integral valve are fabricated from a single, unitary piece.

23. A straw drinking cup according to claim 22, wherein said single, unitary piece is fabricated from a material comprising silicone.

24. A straw drinking cup according to claim 22, wherein said integral valve comprises a membrane that is positioned within said straw so as to normally occlude fluid flow through said straw, and a plurality of slits that are defined in said membrane so as to define a plurality of flaps, said flaps being displaceable when a pressure differential is applied across said membrane in order to permit fluid flow therethrough.

25. A flexible straw assembly, comprising:

a flexible straw having a first end and a second end, an outer wall and an inner wall defining a lumen; and

an integral valve positioned within said flexible straw for impeding fluid flow through said lumen unless a pressure differential is applied thereto.

26. A straw drinking cup according to claim 25, wherein said flexible straw and said integral valve are fabricated from a single, unitary piece.

27. A straw drinking cup according to claim 26, wherein said single, unitary piece is fabricated from a material comprising silicone.

28. A straw drinking cup according to claim 26, wherein said integral valve comprises a membrane that is positioned within said straw so as to normally occlude fluid flow through said straw, and a plurality of slits that are defined in said membrane so as to define a plurality of flaps, said flaps being displaceable when a pressure differential is applied across said membrane in order to permit fluid flow therethrough.

* * * * *