US006032831A

United States Patent [19]

Gardner et al.

[11] **Patent Number: 6,032,831**

[45] **Date of Patent: Mar. 7, 2000**

[54] **PERSONAL HYDRATION SYSTEM WITH AN IMPROVED MOUTHPIECE**

[75] Inventors: **Gary D. Gardner**, Atherton; **Robert Choi**, Gilroy, both of Calif.; **Cynthia A. Peters**, Burleson, Tex.

[73] Assignee: **Came1Bak Products, Inc.**, Petaluma, Calif.

[21] Appl. No.: **09/151,493**

[22] Filed: **Sep. 11, 1998**

Related U.S. Application Data

[63] Continuation-in-part of application No. 09/118,196, Jul. 17, 1998.

[51] **Int. Cl.**[7] **B67D 5/64**

[52] **U.S. Cl.** **222/175**; 222/529; 220/703

[58] **Field of Search** 222/175, 512, 222/527, 529, 92; 224/148.4, 148.5, 148.6; 220/703

[56] **References Cited**

U.S. PATENT DOCUMENTS

33,343	9/1861	Garrick .
259,151	6/1882	Holbon .
274,447	3/1883	Kennish .
D. 337,273	7/1993	Thatcher .
D. 337,274	7/1993	Thatcher .
357,272	2/1887	Donavin .
D. 398,776	9/1998	Fawcett .
581,767	5/1897	Powers .
964,620	7/1910	Dana .
1,272,519	7/1918	Piper .
1,326,966	1/1920	Reeves .
1,404,163	1/1922	Pim .
1,426,024	8/1922	Thureson .
1,576,430	3/1926	Isbell .
1,637,635	8/1927	Corley .
1,889,963	12/1932	Cooney et al. .
2,013,358	9/1935	Osborne .
2,095,351	10/1937	Van Winkle .

(List continued on next page.)

FOREIGN PATENT DOCUMENTS

1002897	3/1952	France .
693272	6/1940	Germany .
70698	7/1946	Norway .
180216	10/1945	Switzerland .
19546	9/1903	United Kingdom .
323451	1/1930	United Kingdom .

OTHER PUBLICATIONS

The Integrator advertisement, FasTrak Systems, Inc., 1996.
The CamelBak Narrow Gauge System advertisement, FasTrak Systems, Inc., 1996.
The Pakster advertisement, FasTrak Systems, Inc., 1996.
The HydroBak advertisement, FasTrak Systems, Inc., 1996.
The H_2•Flow Advertisement, FasTrak Systems, Inc., 1996.
The Mule Advertisement, FasTrak Systems, Inc., 1996.
Camblebak Profit System Catalog, Aug., 1996.
Camelbak® Hydrate or Die® advertisement, FasTrak Systems, Inc., 1996.
Camelbak® Profit System Brochure, FasTrak Systems, Inc., Aug., 1996.

Primary Examiner—Gregory L. Huson
Attorney, Agent, or Firm—Kolisch, Hartwell, Dickinson, McCormack & Heuser

[57] **ABSTRACT**

A personal hydration system with an improved mouthpiece for use in providing fluid for delivery to a user. The mouthpiece includes a neck that is adapted to be mounted on a supply tube to a hydration system and which is joined to a resilient head. The head includes a dispensing face with a pair of lips that define a normally closed slit, through which fluid is dispensed from the mouthpiece, a perimeter and a minimum dimension between opposed points on the perimeter. The bite region extends from the perimeter to a shoulder, which joins the bite region and the neck. From a closed position, in which the lips extend against each other to close the slit and prevent fluid from being dispensed through the slit, the mouthpiece is deformable to a dispensing position in which the lips are spread at least partially away from each other to allow fluid to be dispensed through the lips.

18 Claims, 4 Drawing Sheets

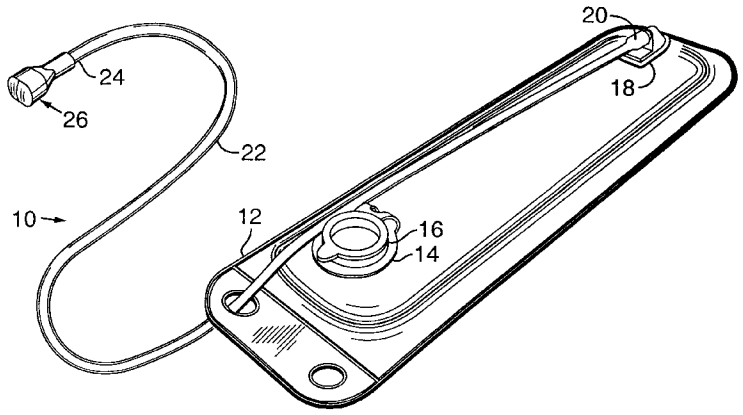

Trove Brands v. CamelBak
IPR2025-00140
Trove Ex. 1014

U.S. PATENT DOCUMENTS

2,144,755	1/1939	Freedman .
2,219,604	10/1940	Trotter .
2,320,906	6/1943	Bent .
2,328,095	8/1943	Phillips .
2,380,372	7/1945	Alderfer .
2,468,915	5/1949	Bayless .
2,485,442	10/1949	Halliday .
2,500,363	3/1950	Koeppel .
2,620,479	12/1952	Buck .
2,738,907	3/1956	Lacher .
2,755,480	7/1956	Jones et al. .
2,792,149	5/1957	Lutz .
2,802,608	8/1957	Gassaway .
2,954,738	10/1960	Di Vette .
2,999,499	9/1961	Willet .
3,067,787	12/1962	Salk .
3,148,624	9/1964	Baldwin .
3,165,241	1/1965	Curry .
3,199,787	8/1965	Oishei et al. .
3,295,144	1/1967	Mengers .
3,633,642	1/1972	Siegel .
3,796,245	3/1974	Wildensteiner .
3,819,151	6/1974	Kish .
3,822,720	7/1974	Souza .
4,089,447	5/1978	Achmeteli .
4,090,650	5/1978	Gotta .
4,095,812	6/1978	Rowe .
4,139,130	2/1979	Glusker et al. .
4,148,420	4/1979	Morrissette et al. .
4,153,092	5/1979	Haslam .
4,159,790	7/1979	Bailey .
4,176,772	12/1979	Danon .
4,189,075	2/1980	Hall .
4,253,454	3/1981	Warncke .
4,265,381	5/1981	Muscatell .
4,274,566	6/1981	Rowe .
4,345,704	8/1982	Boughton .
4,420,097	12/1983	Motsenbocker .
4,449,654	5/1984	Cappis .
4,469,097	9/1984	Kelman .
4,526,298	7/1985	Boxer et al. .
4,541,117	9/1985	Ashbeck .
4,544,087	10/1985	Modig .
4,617,685	10/1986	Grandis .
4,629,098	12/1986	Eger .
4,739,905	4/1988	Nelson .
4,739,913	4/1988	Moore .
4,758,099	7/1988	Branson .
4,776,495	10/1988	Vignot .
4,852,781	8/1989	Shurnick et al. .
4,941,598	7/1990	Lambelet, Jr. et al. .
4,948,023	8/1990	Tripp .
5,060,833	10/1991	Edison et al. .
5,062,591	11/1991	Runkel .
5,085,349	2/1992	Fawcett .
5,104,016	4/1992	Runkel .
5,114,059	5/1992	Thatcher .
5,115,947	5/1992	McDonnell et al. .
5,142,702	9/1992	Piloian .
5,143,266	9/1992	Heckerman et al. .
5,152,442	10/1992	Gallagher .
5,152,443	10/1992	Hagan .
5,215,231	6/1993	Paczonay .
5,228,609	7/1993	Gregory .
5,282,557	2/1994	McCook .
5,288,150	2/1994	Bearman .
5,301,858	4/1994	Hollander .
5,353,975	10/1994	Libertucci .
5,400,934	3/1995	Ducros .
5,407,112	4/1995	Christodoulou et al. .
5,427,290	6/1995	Thatcher .
5,431,308	7/1995	Tchen .
5,497,923	3/1996	Pearson et al. .
5,566,869	10/1996	Katz .
5,586,703	12/1996	Radar et al. .
5,601,207	2/1997	Paczonay .
5,725,139	3/1998	Smith .
5,727,714	3/1998	Fawcett .
5,727,720	3/1998	Thatcher .
5,755,368	5/1998	Bekkedahl .
5,791,510	8/1998	Paczonay .
5,803,333	9/1998	Fawcett .
5,816,457	10/1998	Croft .

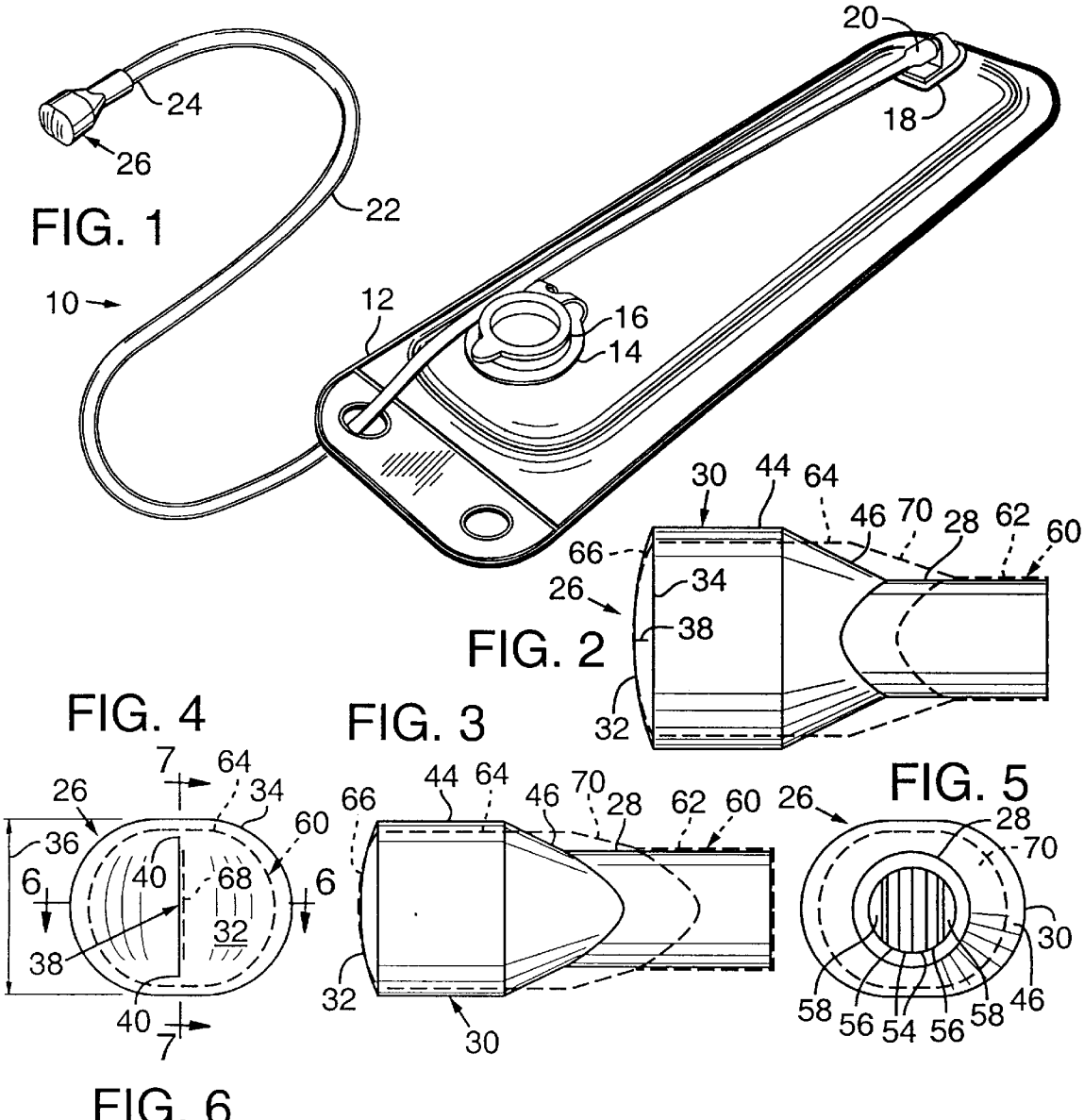
FIG. 1
FIG. 2
FIG. 3
FIG. 4
FIG. 5
FIG. 6
FIG. 7
10
12
14
16
18
20
22
24
26
28
30
32
34
36
38
40
44
46
48
50
52
54
56
58
60
62
64
66
68
70
6
7

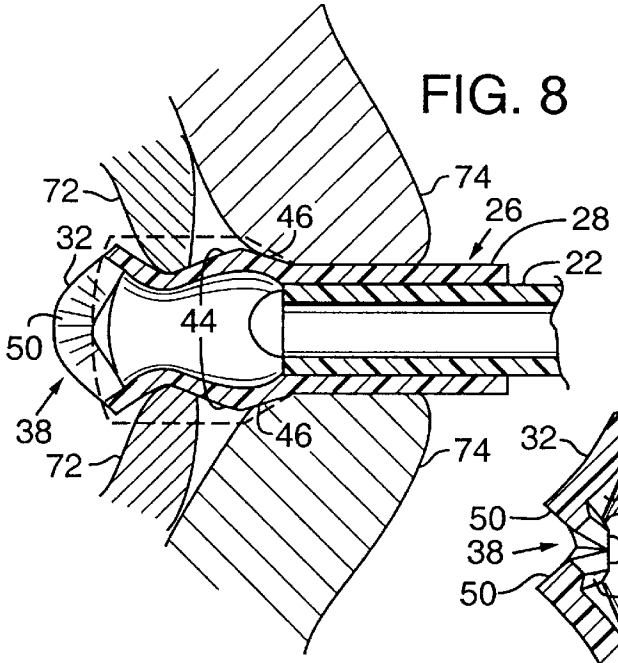

FIG. 8

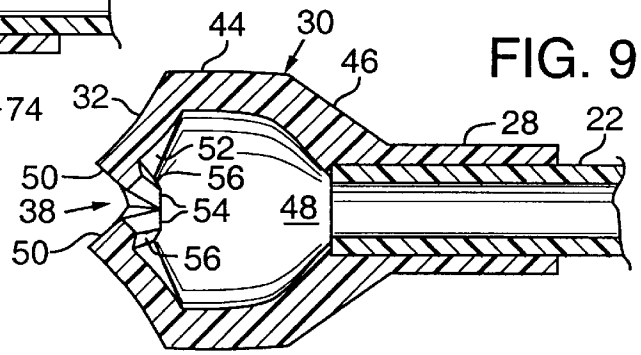

FIG. 9

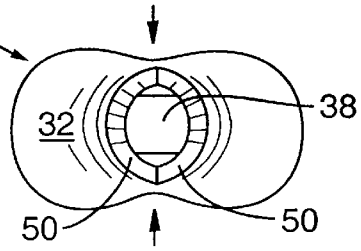

FIG. 10

FIG. 11

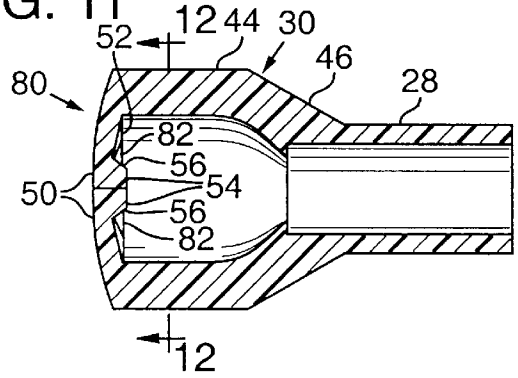

FIG. 12

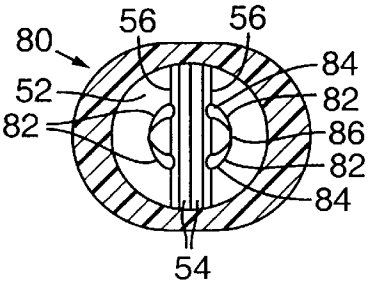

FIG. 13

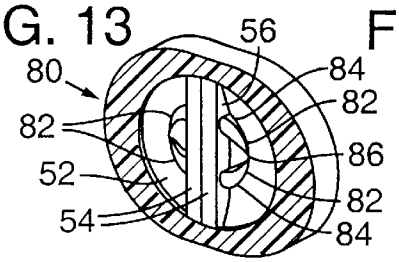

FIG. 14

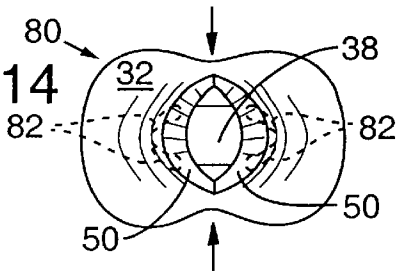

FIG. 15

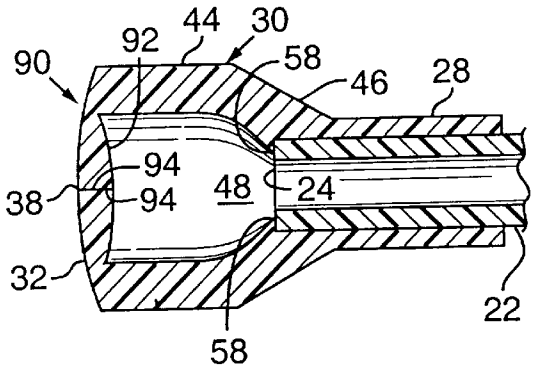

FIG. 16

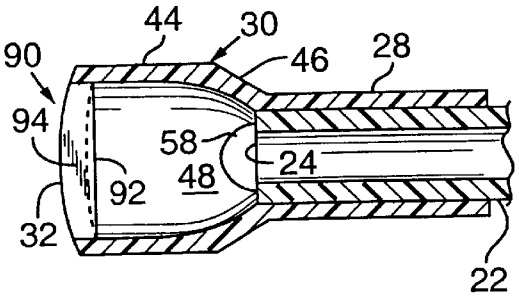

FIG. 17

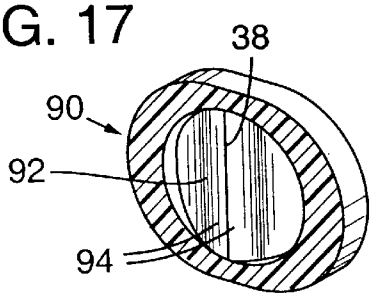

FIG. 18

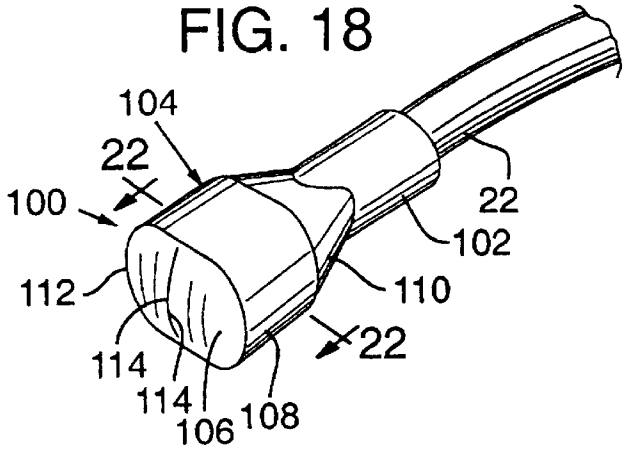

FIG. 19

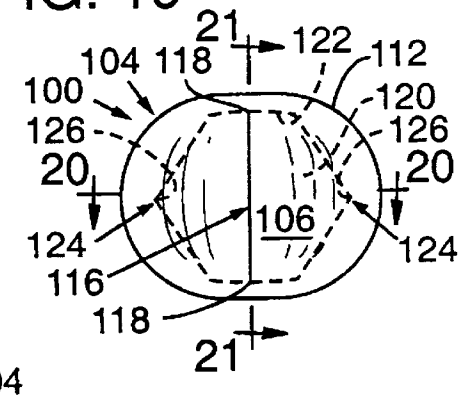

FIG. 20

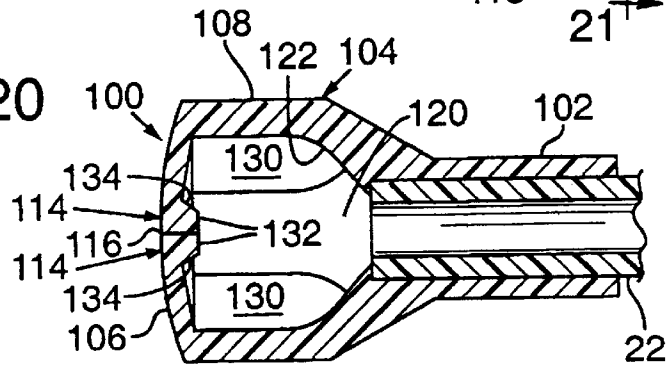

FIG. 21

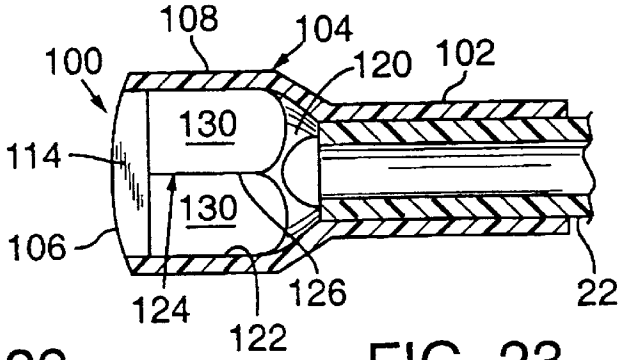

FIG. 22

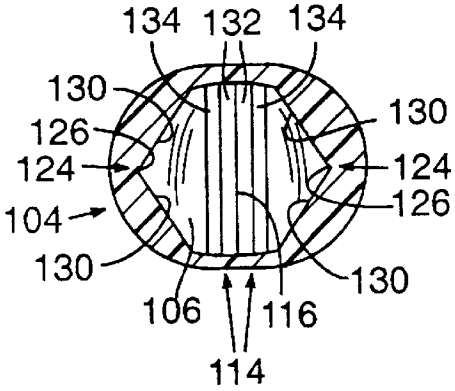

FIG. 23

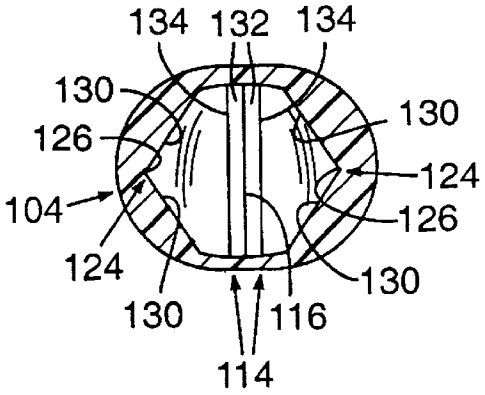

PERSONAL HYDRATION SYSTEM WITH AN IMPROVED MOUTHPIECE

RELATED APPLICATION

This is a continuation-in-part application of similarly-entitled, copending application Ser. No. 09/118,196, which was filed on Jul. 17, 1998.

FIELD OF THE INVENTION

The invention generally relates to personal hydration systems, and more particularly to a personal hydration system with an improved mouthpiece.

BACKGROUND AND SUMMARY OF THE INVENTION

Medical research has demonstrated the importance of maintaining adequate hydration while engaging in strenuous physical activities, such as bicycling or mountain climbing. In the not too distant past, participants in such activities carried their water in bottles or canteens from which they drank periodically. More recently, personal hydration systems have been developed which allow users to drink more or less continuously while engaged in sporting or recreational activities. These personal hydration systems typically have a bag-like fluid reservoir that is carried in a back- or waist-mounted pack. A long flexible hose is connected to the reservoir through an exit port at one end and terminates in a mouthpiece at the other end. The hose is long enough to allow the mouthpiece to be carried in the user's mouth to enable the user to draw water from the reservoir at will. Examples of these hydration systems are disclosed in U.S. Pat. Nos. 5,727,714, 5,060,833 and 5,085,349, the disclosures of which are hereby incorporated by reference.

Although personal hydration systems have proven to be a great advance over traditional water bottles, they do suffer from some drawbacks. In particular, it is often difficult for the user to quickly draw an acceptable flow of water from the reservoir. It should be understood that every breath the user spends drawing fluid from the reservoir is one less breath that can be used to deliver oxygen to the user's body. Therefore, there is a need for a mouthpiece that is capable of delivering an increased flow of fluid over conventional mouthpieces, which generally require multiple breaths to be used to draw a sufficient amount of fluid from the system.

Furthermore, it is desirable for the mouthpiece not to leak when in a closed position and to remain comfortably in a ready-to-use position in the user's mouth, even when not being used to dispense fluids. Simply scaling the size of conventional mouthpieces has not solved the flowrate problem because the enlarged designs tend to leak fluid when they should otherwise be in a closed position. This not only diminishes the user's fluid supply, but also leaks fluid onto the user and other surrounding objects.

The present invention is a personal hydration system with an improved mouthpiece. The mouthpiece includes a neck that is coupled to the supply tube of a hydration system and adapted to receive a flow of fluid therefrom. The neck is joined to a resilient head that is adapted to be received within a user's mouth and which preferably is of larger cross-section than the neck. The head includes a dispensing face with a pair of lips that form a normally closed slit through which fluid is selectively dispensed from the mouthpiece. From a closed position in which the lips extend against each other to close the slit and prevent fluid from being dispensed through the slit, the mouthpiece is defornable to a dispensing

position in which the lips are spread at least partially away from each other to allow fluid to be dispensed through the lips. The face has a perimeter and a minimum dimension between opposed points on the perimeter. From the perimeter, a bite region extends to a shoulder that joins the bite region to the neck. Typically, the mouthpiece is placed in the user's mouth so that the user's lips extend around the neck portion and against the lip-receiving shoulder to retain the mouthpiece in the user's mouth in this position, the user's teeth are positioned to bite down upon the bite region to deform the mouthpiece to the dispensing position and thereby enable fluid to be dispensed to the user. The mouthpiece is adapted to selectively deliver fluid at a flowrate greater than presently available through known mouthpieces.

Many other features of the present invention will become manifest to those versed in the art upon making reference to the detailed description which follows and the accompanying sheets of drawings in which preferred embodiments incorporating the principles of this invention are disclosed as illustrative examples only.

BRIEF DESCRIPTION OF THE DRAWINGS

FIG. **1** is a perspective view of a personal hydration system with a mouthpiece constructed according to the present invention.

FIG. **2** is a top plan view of the mouthpiece of FIG. **1** with a prior art mouthpiece shown in dashed lines.

FIG. **3** is a side elevation view of the mouthpieces of FIG. **2**.

FIG. **4** is a front elevation view of the mouthpieces of FIG. **2**.

FIG. **5** is a rear elevation view of the mouthpieces of FIG. **2**.

FIG. **6** is a top cross-sectional view of the mouthpiece of FIG. **1** taken along the line **6—6** in FIG. **4** and showing the mouthpiece in a closed position.

FIG. **7** is a side cross-sectional view of the mouthpiece of FIG. **1** taken along the line **7—7** in FIG. **4** and showing the mouthpiece in a closed position.

FIG. **8** is an environmental view showing the mouthpiece of FIG. **1** positioned in a user's mouth in a dispensing position, with the mouthpiece shown in a side cross-sectional view.

FIG. **9** is a top cross-sectional view of the mouthpiece of FIG. **8**.

FIG. **10** is a front view of the mouthpiece of FIG. **8**.

FIG. **11** is a side cross-sectional view of an alternate embodiment of the mouthpiece of FIG. **1** in a closed position.

FIG. **12** is a cross-sectional view of the mouthpiece of FIG. **11** taken along the line **12—12** in FIG. **11**.

FIG. **13** is a perspective view of the portion of the mouthpiece shown in FIG. **12**.

FIG. **14** is a front elevation view of the mouthpiece of FIG. **11** in a dispensing position.

FIG. **15** is a side cross-sectional view of another alternate embodiment of the mouthpiece of FIG. **1**.

FIG. **16** is a top cross-sectional view of the mouthpiece of FIG. **15**.

FIG. **17** is a cross-sectional view of the mouthpiece of FIG. **15**.

FIG. **18** is an isometric view of another embodiment of the mouthpiece of FIG. **1**.

FIG. **19** is a front elevation view of the mouthpiece of FIG. **18**.

FIG. **20** is a top cross-sectional view of the mouthpiece of FIG. **18** taken along the line **20**—**20** in FIG. **19**.

FIG. **21** is a side cross-sectional view of the mouthpiece of FIG. **18** taken along the line **21**—**21** in FIG. **19**.

FIG. **22** is a cross-sectional view taken along the line **22**—**22** in FIG. **20**.

FIG. **23** is the cross-sectional view of FIG. **22** showing another variation of the lips of the mouthpiece.

DETAILED DESCRIPTION OF THE PREFERRED EMBODIMENTS

A personal hydration system according to the present invention is shown generally at **10** in FIG. **1**. System **10** includes a fluid reservoir, or bladder, **12** for storing fluid (such as water, juice, etc.). Bladder **12** is preferably flexible and may vary in size and shape depending on the volume of fluid to be carried by the user and the shape of the pack or other storage pack into which the bladder is stored when carried by a user. Bladder **12** includes an input port, such as a sealable filler spout **14** with a cap **16**, which can be opened to empty, fill or clean the bladder. Bladder **12** also includes an exit port **18** onto which one end **20** a flexible hose **22** is mounted. Hose **22** is of sufficient length to extend from bladder **12** in its stowed position, typically on a user's back, to the user's mouth.

The other end **24** of hose **22** is connected to a mouthpiece **26**, which is sized to be received within the user's mouth to deliver fluid to the user. Mouthpiece **26** is shown in more detail in FIGS. **2**–**7**. Mouthpiece **26** includes a neck **28** which is connected to and in fluid communication with end **24** of hose **22**. As shown in FIG. **6**, neck **28** is fit over end **24** of hose **22** and forms a watertight seal. It should be noted that the mouthpiece can be slipped on and off the hose for cleaning or maintenance.

Mouthpiece **26** further includes a head **30**, which typically is of larger cross-section than neck **28** and which includes a dispensing face **32** through which fluid is selectively dispensed from the mouthpiece. Dispensing face **32** has a perimeter **34** with a minimum dimension measured from opposed points on the perimeter, as indicated at **36** in FIG. **4**. Dispensing face **32** further includes an elongate, normally closed slit **38** through which fluid is dispensed from the mouthpiece. Slit **38** is described in more detail subsequently, but as shown, extends substantially across face **32** and includes ends **40** adjacent perimeter **34**.

From perimeter **34**, head **30** includes a body region, referred to herein as a bite region, **44** that extends generally normal to the plane of perimeter **34** and provides a surface upon which the user may apply a force, such as with the user's teeth, to deform mouthpiece **26** to open slit **38** and enable a flow of fluid to be dispensed from the mouthpiece. Dispensing face **32** and bite region **44** collectively form a supply chamber **48** into which the flow of fluid is housed before being dispensed to the user. By comparing FIGS. **3** and **4**, it can be seen that the length of bite region **44** is less than minimum dimension **36**. Typically, bite region **44** has a length that is less than approximately one inch, preferably less than approximately 0.7 inches, more preferably less than 0.6 inches and even more preferably between approximately 0.6 and approximately 0.4 inches. For example, a bite region that is 0.5 inches in length has proven to work well, both from manufacturing and ease-of-use standpoints.

Bite region **44** terminates at a lip-receiving shoulder **46** that connects the bite region with neck **28**. Lip-receiving shoulder **46** may also be referred to as a transition region because, as shown in FIGS. **3**–**4**, it extends at an angle between the smaller cross-sectional dimension of neck **28** and the larger cross-sectional dimension of head **30**. Shoulder **46** provides a surface upon which a user's lips may be placed when the mouthpiece is used. As shown, shoulder **46** extends generally at an angle of approximately 60° between bite region **44** and neck **28**. It should be understood that it is within the scope of the present invention that the shoulder may extend at other angles and may have different shapes, such as curved, concave, convex, etc., as it extends between region **44** and neck **25**. An angle of 60° is presently preferred because it provides a comfortable lip-receiving shoulder and also is not too steep to prevent the core pin currently used in the manufacturing process to be removed.

In FIGS. **5**–**7**, it can be seen that slit **38** is formed between a pair of opposed lips **50**, which extend across perimeter **34**. As shown, lips **50** extend in the direction of the dispensing face's minimum dimension **36**, however, it is within the scope of the present invention that the lips, and therefore the slit defined therebetween, could extend across face **32** in other directions as well, such as transverse to the minimum dimension. Lips **50** further extend from the inner surface **52** of the dispensing face into supply chamber **48** to provide an area of increased contact between the lips. This helps prevent fluid from passing through slit **38** other than when the user intends for fluid to be dispensed.

As perhaps best seen in FIGS. **5** and **6**, the portion of lips **50** extending within supply chamber **48** includes an end wall **54** and a tapered side wall **56** extending at an angle between end wall **54** and inner surface **52**. This angle may vary between approximately 0° and approximately 75°, with a preferred value of between approximately 30° and approximately 60° and a more preferred value of approximately 45°. An angle of 45° is presently preferred because it produces a generally laminar flow of fluid through the slit when the mouthpiece is in the dispensing position, which is discussed in more detail subsequently. In FIGS. **2**–**7**, lips **50** extend against each other to close slit **38** and prevent fluid from being dispensed therethrough. This position is referred to as the closed position of the mouthpiece, and is the resting position to which the resilient mouthpiece and lips return when any applied force is removed.

Mouthpiece **26** preferably includes a pair of stops **58** that extend internally into mouthpiece **26** to prevent supply tube **22** from being inserted into mouthpiece **26** more than a defined distance. For example, as shown in FIGS. **5**–**7**, stops **58** extend into supply chamber **48** to engage end **24** of supply tube **22** and prevent it from being inserted into the supply chamber of mouthpiece **26**. Also shown in FIGS. **6** and **7** are the thicknesses of the side walls of mouthpiece **26**. It should be understood that they may vary in relative size depending on the particular materials of construction and sizes of core pins and dies used in the molding process to form mouthpiece **26**.

A prior art mouthpiece is shown in dashed lines in FIGS. **2**–**5** and indicated generally at **60**. As shown, prior art mouthpiece **60** has many of the same general elements as mouthpiece **26**, such as a neck **62**, head **64**, dispensing face **66**, slit **68**, bite region **70** and transition region **72**. However, prior art mouthpiece **60** has a longer length, yet shorter slit, height and width than mouthpiece **26**. By comparison, head **26** is approximately 20% higher and wider than the prior art mouthpiece, yet is approximately 33% shorter in length. Furthermore, head **26** produces a flowrate that is approximately 100% greater than the flowrate through the prior art mouthpiece, yet has a supply chamber than is approximately

33% smaller in volume. For purposes of more detailed comparison, the presently preferred dimensions of mouthpiece **26** are compared below to the dimensions of the prior art mouthpiece. It should be understood that dimensions other than those presented below are within the scope of the present invention.

Head **26** has a circumference of approximately 2.219 inches and is approximately 0.6 inches high and 0.77 inches wide, with side walls that are approximately 0.5 inches in length and approximately 0.05 inches and 0.140 inches thick, respectively. Slit **40** is between approximately 0.445 inches and approximately 0.485 inches long, and head **32** has a supply chamber between face **32** and transition region **46** with a volume of approximately 0.1412 cubic inches. The prior art mouthpiece, on the other hand has a head **64** with a circumference of approximately 1.932 inches and is approximately 0.5 inches high and 0.67 inches wide, with side walls that are approximately 0.74 inches in length and approximately 0.0425 inches and 0.125 inches thick, respectively. Slit **68** is approximately 0.38 inches long, and head **64** defines a supply chamber between face **66** and transition region **70** with a volume of approximately 0.1885 cubic inches.

The increased cross-sectional area transverse to the direction of fluid flow, coupled with the larger slit enables mouthpiece **26** to dispense fluid at a much higher flowrate. In the dispensing position, such as shown in FIG. **10**, the slit forms an opening that is sized to enable fluid to be dispensed at a flowrate greater than 30 ml/sec, and more preferably greater than 40 ml/sec under normal operating conditions. In tests, a hydration system with the mouthpiece shown in FIGS. **1–10** has produced flowrates between approximately 35 ml/sec and approximately 45 ml/sec. More particularly, flowrates greater than 41 ml/sec are possible, as compared to a flowrate of 18 ml/sec with the prior art mouthpiece under normal operating conditions. By normal operating conditions, it is meant that the mouthpiece is placed in a user's mouth, urged to the dispensing position described herein, and drawn or sucked upon by the user, much like a person draws upon a drinking straw. This more than twofold increase in flowrate means that a user has to expend less than half as many breaths to draw a desired volume of fluid through the mouthpiece.

In the dispensing position shown in FIG. **10**, slit **40** has an area that is greater than 50% of the cross-sectional area of neck **28** (measured transverse to the direction of fluid flow from the inner wall of the neck). Preferably, the area of the slit in the dispensing position is greater than 60% of the area of the neck. As shown in FIG. **10**, the slit area is between approximately 50% and approximately 70% of the area of the neck and more particularly between approximately 55% and approximately 65% of the area of the neck. More breaths devoted to breathing means more oxygen to the user's body, which should thereby increase performance.

In addition to increasing the flowrate of fluid from mouthpiece **26**, the dimensions of the mouthpiece also make it more comfortable to use. When the mouthpiece is placed in an operative position in the user's mouth, as shown in FIG. **8**, bite region **44** is positioned generally between the user's teeth **74**, and the user's lips **76** are naturally seated against lip-receiving shoulder **46** and around neck **28**. By naturally seated, it is meant that the user's lips fall into this position, without requiring the user to stretch his or her lips to extend around head **30** or to over-insert mouthpiece **26** into his or her mouth. The spacing of shoulder **46** from dispensing face **32** not only makes mouthpiece **26** much more comfortable to use (because the user's mouth can remain substantially in its normal closed position), but also enables the mouthpiece to more easily be retained in a preferred operative position, as compared to prior art mouthpiece **60**. Because of its longer head **64**, a user's lips are naturally seated on bite region **70** of prior art mouthpiece **60** instead of transition region **72**. In this position, mouthpiece **60** will tend to slip further into or out of the user's mouth unless constant pressure is provided by the user's teeth and/or lips. Furthermore, mouthpiece **60** will tend to pivot within the user's mouth about the regions of constant pressure.

If, on the other hand, the prior art mouthpiece is positioned in the user's mouth so that the user's lips extend around the neck, then the user's teeth will not be properly positioned to bite down upon the "sweet spot" of the head. It should be understood that the bite regions of both mouthpieces have what is referred to as a "sweet spot" or region of less resistance upon which the user can most easily apply force to cause the mouthpiece to deform to its dispensing position. With both mouthpieces **26** and **60**, the sweet spot is generally between the dispensing region and transition region. With mouthpiece **26**, placing the mouthpiece within the user's mouth so that the user's lips **76** are seated on shoulder **46** automatically positions the sweet spot in a position to be engaged by the user's teeth **74**. In prior art mouthpiece **60**, placing the user's lips on transition region **72** results in the user's teeth being off-center from the sweet spot. Therefore, the mouthpiece must be repositioned prior to use.

Once positioned in the user's mouth as discussed above, mouthpiece **26** can be deformed from its closed position to a dispensing position, shown in FIGS. **8–10**, when a force is applied to the regions of bite region **44** generally adjacent ends **40** of slit **38**. This compressive force is applied along the axes of the lips, as indicated generally with arrows in FIG. **10**, and causes lips **50** to spread at least partially apart from each other to cause slit **38** to form an opening, also referred to as a hydraulic orifice, through which fluid may be passed. As used here, the term dispensing position broadly refers to any of the positions in which the lips are spread at least partially apart from each other so that the slit forms an opening through which fluid may be dispensed. It should be understood that the size of the opening formed by slit **38** will vary depending upon the amount of force applied by the user.

Once in a dispensing position, the user may draw fluid through the mouthpiece, much like the user would draw upon a drinking straw. As discussed, this is referred to as the normal operating condition for using mouthpiece **26** and any attached hydration system. When this force is removed, the resilient nature of mouthpiece **26**, and more particularly, head **32** and lips **50** causes the mouthpiece to return to its closed, non-dispensing position. An example of a suitable material for mouthpiece **26** is fifty-five durometer silicone, although it is within the scope of the invention that other materials may be used as well, as long as they meet the operating criteria discussed herein.

In FIGS. **11–14**, an alternate embodiment of the invented mouthpiece is shown and indicated generally at **80**. Mouthpiece **80** has the same components and subcomponents as the previously described mouthpiece **26**. In addition, mouthpiece **80** includes a plurality of resilient supporting ribs **82** that extend from lips **50** to provide increased protection against leaks by biasing the lips to return to their closed position. As perhaps best seen in FIGS. **12** and **13**, a rib **82** extends from each lip **50**, and more particularly from side wall **56** of each lip along inner surface **52** of dispensing face **32**. It should be understood, however, that it is within the

scope of the invention that ribs **82** could alternatively extend along the outer surface of face **32**. Each rib **82** extends from a respective one of the lips at a first position, and returns to the lip at a second position spaced-apart from the first. When mouthpiece **80** is in its dispensing position, ribs **82** are bent or deformed from the resting position shown in FIGS. **12** and **13** to a dispensing position shown in FIG. **14**. As such, ribs **82** further bias the mouthpiece, and especially face **32** and lips **50** to return to the closed position. Preferably, ribs **82** include ends **84** that extend from lips **50** as described above and taper to an intermediate region **86** of narrower cross-section than ends **84**. The reduced size of intermediate region **86**, which extends in a portion of face **32** that undergoes significant bending or deformation, minimizes the amount of additional force needed to deform mouthpiece **80** to its dispensing position, while still providing a continuous, curved support for lips **50**. In variations of this embodiment, intermediate region **86** is substantially or completely coplanar with inner surface **52**.

In FIGS. **15–17**, another alternate embodiment of the invented mouthpiece is shown and indicated generally at **90**. Unless otherwise indicated, mouthpiece **90** has the same components, dimensions and properties as mouthpiece **26**, including a neck **28** and a head **30** that includes a dispensing face **32** (with a pair of lips that define a normally closed slit **38**), a bite region **44**, a transition region **46**, and a supply chamber **48** defined by the dispensing face and the bite region. In FIGS. **15–17**, the inner surface of face **32** is generally indicated at **92**, and it can be seen that surface **92** has a convex cross-sectional configuration generally transverse to slit **38**.

As shown, the thickness of face **32** distal slit **38** is between approximately 0.06 inches and approximately 0.14 inches, similar to the faces of the previously discussed mouthpieces. A thickness distal slit **38** of approximately 0.8 inches has proven to perform particularly well. As surface **92** extends from bite region **44** toward slit **38**, it can be seen in FIGS. **15** and **17** that face **32** increases in thickness and extends into the supply chamber until it forms a pair of lips **94** that define slit **38**. The radius of curvature of surface **92** is approximately 0.75 inches, although it should be understood that larger or small radii of curvature may be acceptable as well.

Another embodiment of the present invention is shown in FIGS. **18–23** and indicated generally at **100**. As shown, mouthpiece **100** has outer dimensions that correspond with the previously disclosed embodiments, including a neck **102** and a head **104** with a dispensing face **106**, bite region **108** and lip-receiving shoulder **110**. Face **106** extends to an outer perimeter **112**, where it is joined to a bite region **108**, and includes a pair of opposed lips **114** that define a slit **116** (indicated in FIG. **19**) extending therebetween. As shown in FIG. **19**, slit **116** is elongate and has a pair of ends **118** adjacent perimeter **112**. Unless otherwise specified, mouthpiece **100** has the same elements and subelements as any of the above embodiments, including the shapes, **10** properties and possible variations discussed with respect to the mouthpieces shown in FIGS. **1–17**.

Similar to the above-described embodiments, bite region **108** extends from head **104** to form the internal surface, or side wall, **122** of a supply chamber **120**, into which fluid is received prior to being dispensed from face **106**. As shown in FIGS. **19–21**, side wall **122** encircles the supply chamber and forms plural corners **124** distal slit **116**. At their apexes **126**, corners **124** define fold lines that extend away from face **106** generally transverse to slit **116**. Side wall **122** may alternatively be described as including plural discontinuities because the otherwise smooth, or actuate, inner wall is broken by the apexes of the corners.

As perhaps best seen in FIGS. **19** and **21**, side wall **122** includes regions **130** that have generally planar configurations and meet to form apexes **126** distal slit **116**. When mouthpiece **100** is deformed to its dispensing position, abutting regions **130** are pivoted toward each other about apex **126**. Regions **130** give side wall **122** a generally polygonal configuration in a plane parallel to perimeter **112**, and as shown in FIGS. **19** and **22**, generally resembles a hexagon. It should be understood, however, that there may still be some curvature to portions of side wall **120**. For example, a slight curvature proximate ends **118** of slit **116** promotes easier opening of slit **116** when a user bites upon bite region **104**. Abutting regions **130** extend at an angle with respect to each other that is between approximately 80° and approximately 130°, preferably between approximately 90° and approximately 125°, and more preferably between approximately 100° and approximately 120°. Angles outside of this range are also within the scope of the present invention, however the above-discussed angular ranges are presently preferred. In mouthpiece **100** shown in FIGS. **19–22**, regions **130** extend at an angle of approximately 114° with respect to each other, with side wall **120** having a thickness at apex **126** of approximately 0.16 inches. This thickness is measured from the supply chamber outwardly to the closest point on the outer surface of the bite region.

At apex **126** of each corner **124**, bite region **108** has a reduced thickness than the corresponding regions adjacent apex **126**. This thinner, generally pointed configuration of the apexes **126**, along which the corresponding fold lines extend, enables the mouthpiece to flex or pivot about the apex to the dispensing position when a user bites upon region **108**. Because of the reduced thickness at the apex, the mouthpiece deforms substantially by pivoting about the apex instead of by compressing a relatively thick, or even thickest, portion of the bite region. This enables the slit to create a hydraulic orifice with a larger area, without requiring the slit to be lengthened. Upon removal of the deforming force, the mouthpiece is biased to spring back to its original, unstressed position in which slit **116** is closed and no fluid is dispensed therethrough.

Experiments using mouthpiece **100** have demonstrated that fluid may be dispensed from dispensing face **106** at a rate greater than 40 ml/sec, including flowrates of approximately 45 ml/sec, under the normal operating conditions discussed previously.

As shown in FIGS. **20** and **22**, lips **114** extend into supply chamber **120** beyond dispensing face **106**. Furthermore, lips **114** include end walls **132** and side walls **134** that extend at an angle between face **106** and the corresponding end wall **132**. End walls **132** and side walls **134** of lips **114** may include any of the configurations and shapes described above with respect to end walls **54** and side walls **56**, including side walls that extend generally transverse to face **106**, as shown in FIG. **23**. Side walls that extend at an angle of between approximately 30° and approximately 60° are currently preferred because they promote more laminar flow of the fluid as it is received within supply chamber **120** and dispensed through slit **116**, however, the invented lips encompass any of the configurations of lips disclosed herein.

The foregoing description of the preferred embodiments of the invention has been presented for purposes of illustration and description. It is not intended to be exhaustive or to limit the invention to the precise form disclosed, and many modifications and variations are possible in light of

the above teaching. The embodiments were chosen and described in order to best explain the principles of the invention and its practical application to thereby enable others skilled in the art to best utilize the invention in various embodiments and with various modifications as are suited to the particular use contemplated. It is intended that the scope of the invention be defined by the claims appended hereto.

We claim:

1. A personal hydration system for use in providing fluid to a user, the hydration system comprising:

a reservoir configured to hold a supply of fluid and including an output port through which the fluid may be passed;

a flexible hose with first and second ends, the first end being connected to the output port; and

a mouthpiece connected to the second end of the hose and configured to be placed in the user's mouth to provide fluid delivery thereto, the mouthpiece comprising:

a neck portion mounted on the second end of the hose; and

a head joined to the neck and adapted to be received in a user's mouth, the head including a dispensing face with a slit through which fluid is selectively dispensed from the mouthpiece, and a body region extending away from the face and including an interior surface which defines a supply chamber into which fluid is received prior to being dispensed from the mouthpiece, the internal surface including plural corners with apexes distal the slit.

2. The hydration system of claim **1**, wherein the corners extend along the surface in a direction generally transverse to the face.

3. The hydration system of claim **2**, wherein the corners extend along at least a substantial portion of the length of the surface.

4. The hydration system of claim **1**, wherein each comer further includes generally planar regions proximate its apex.

5. The hydration system of claim **4**, wherein the thickness of the body region at each apex is less than the thickness proximate each apex.

6. The hydration system of claim **1**, wherein each comer includes a region of reduced thickness distal the slit.

7. The hydration system of claim **6**, wherein the region of reduced thickness is at the apex of each corner.

8. A personal hydration system for use in providing fluid to a user, the hydration system comprising:

a reservoir configured to hold a supply of fluid and including an output port through which the fluid may be passed;

a flexible hose with first and second ends, the first end being connected to the output port; and

a mouthpiece connected to the second end of the hose and configured to be placed in the user's mouth to provide fluid delivery thereto, the mouthpiece comprising:

a neck portion mounted on the second end of the hose; and

a head joined to the neck and adapted to be received in a user's mouth, the head including a dispensing face with a slit through which fluid is selectively dispensed from the mouthpiece, and a body region extending away from the face and including an interior surface which defines a supply chamber into which fluid is received prior to being dispensed from the mouthpiece, the internal surface including plural generally planar regions extending generally transverse to the face.

9. The hydration system of claim **8**, wherein the planar regions are joined together at an apex extending transverse to the face distal the slit.

10. The hydration system of claim **9**, wherein the apex is adapted to provide an axis about which the planar regions are pivoted toward each other when the mouthpiece is deformed to the dispensing position.

11. The hydration system of claim **8**, wherein the mouthpiece is adapted to deliver fluid to the user under normal operating conditions at a flowrate greater than 40 ml/sec.

12. A personal hydration system for use in providing fluid to a user, the hydration system comprising:

a reservoir configured to hold a supply of fluid and including an output port through which the fluid may be passed;

a flexible hose with first and second ends, the first end being connected to the output port; and

a mouthpiece connected to the second end of the hose and configured to be placed in the user's mouth to provide fluid delivery thereto, the mouthpiece comprising:

a neck portion mounted on the second end of the hose; and

a head adapted to be received in a user's mouth and including a dispensing face with a slit, a perimeter and a minimum dimension between opposed points on the perimeter, wherein the head further includes a bite region extending from the perimeter generally toward the neck to a lip-receiving shoulder, the lip-receiving shoulder extends from the bite region to the neck, and the bite region has a length measured from the perimeter to the lip-receiving shoulder which is less than the minimum dimension, and further wherein the bite region includes an internal surface with plural corners, each comer including an apex distal the slit.

13. The hydration system of claim **12**, wherein the corners extend along the surface and away from the dispensing face, with the apex defining an axis extending generally transverse to the face.

14. The hydration system of claim **13**, wherein each corner includes abutting regions forming the apex, said regions being pivoted toward each other about the axis when the mouthpiece is urged from the closed position to the dispensing position.

15. The hydration system of claim **12**, wherein the corners extend along at least a substantial portion of the surface.

16. A hydration system for use in providing fluid to a user, the hydration system comprising:

a reservoir configured to hold a supply of fluid and including an output port through which the fluid may be passed;

a flexible hose with first and second ends, the first end being connected to the output port; and

a mouthpiece connected to the second end of the hose and configured to be placed in the user's mouth to provide fluid delivery thereto, the mouthpiece comprising:

a neck adapted to receive a supply of fluid from the hydration system and having an inner wall that defines a cross-sectional area measured transverse to the direction of fluid flow; and

a resilient head in fluid communication with the neck and having a dispensing face with a pair of lips defining a normally closed slit extending therebetween to provide a sealable opening through which fluid is selectively dispensed when the lips are urged

from a closed position, in which the lips extend against each other to close the slit and prevent fluid from being dispensed therethrough, to a dispensing position, in which the lips are spread at least partially away from each other to enable fluid to be dispensed through the slit, wherein in the dispensing position the slit forms an opening with an area that is at least 50% of the area of the neck, wherein the bite region includes an internal surface defining a supply chamber into which fluid is received prior to being dispensed through the dispensing face, and further wherein the internal surface includes plural discontinuities.

17. The hydration system of claim **16**, wherein the internal surface includes plural corners, each having an apex distal the slit.

18. The hydration system of claim **17**, wherein each apex extends generally transverse to the face along at least a substantial portion of the surface.

* * * * *