Trials@uspto.gov
571-272-7822

Paper 6
Entered: October 21, 2016

UNITED STATES PATENT AND TRADEMARK OFFICE

BEFORE THE PATENT TRIAL AND APPEAL BOARD

adidas AG,
Petitioner,

v.

NIKE, Inc.,
Patent Owner.

Case IPR2016-00922
Patent 8,266,749 B2

Before JOSIAH C. COCKS, MICHAEL J. FITZPATRICK, and JAMES B. ARPIN, *Administrative Patent Judges.*

ARPIN, *Administrative Patent Judge.*

DECISION
Institution of *Inter Partes* Review
37 C.F.R. § 42.108

Skechers EX1015
Skechers v Nike

adidas AG ("Petitioner") filed a Petition pursuant to 35 U.S.C. §§ 311–19 to institute an *inter partes* review of claims 1–9, 11–19, and 21of U.S. Patent No. 8,266,749 B2 (Ex. 1001, "the '749 patent").[1] Paper 2 ("Pet."). Nike, Inc. ("Patent Owner") did not file a Preliminary Response.[2] Applying the standard set forth in 35 U.S.C. § 314(a), which requires demonstration of a reasonable likelihood that Petitioner would prevail with respect to at least one challenged claim, we institute an *inter partes* review of claims 1–9, 11–19, and 21 of the '749 patent.

I. BACKGROUND

A. *The '749 Patent*

The '749 patent claims priority from U.S. Patent Application No. 10/791,289, filed on March 3, 2004, now issued as U.S. Patent No. 7,347,011 B2 ("the '011 patent") (Ex. 1001 at (60)) and relates to articles of footwear incorporating an upper that is at least partially formed from a textile material (*id.* at col. 1, ll. 20–23). Conventional articles of athletic footwear may include two primary elements: an upper and a sole structure. *Id.* at col. 1, ll. 25–28. The upper may form a void in the interior of the footwear for receiving a wearer's foot, and the upper may extend over the instep and toe areas, along the medial and lateral sides, and around the heel area of the wearer's foot. *Id.* at col. 1, ll. 42–47.

In particular, the Specification describes articles of footwear having an upper incorporating a knitted textile element and having a sole structure secured to the upper. *Id.* at col. 3, ll. 27–33. Methods for manufacturing an

[1] Petitioner identifies adidas International B.V.; adidas North America, Inc.; adidas America, Inc.; and adidas International, Inc., as real parties-in-interest. Pet. 1.
[2] Patent Owner identifies only itself, as a real party-in-interest. Paper 5, 2.

Skechers EX1015
Skechers v Nike

article of footwear include "mechanically-manipulating a yarn with a circular knitting machine, for example, to form a cylindrical textile structure. In addition, the method involves removing at least one textile element from the textile structure, and incorporating the textile element into an upper of the article of footwear." *Id.* at col. 3, ll. 41–46.

Figure 9 of the '749 patent is reproduced below.

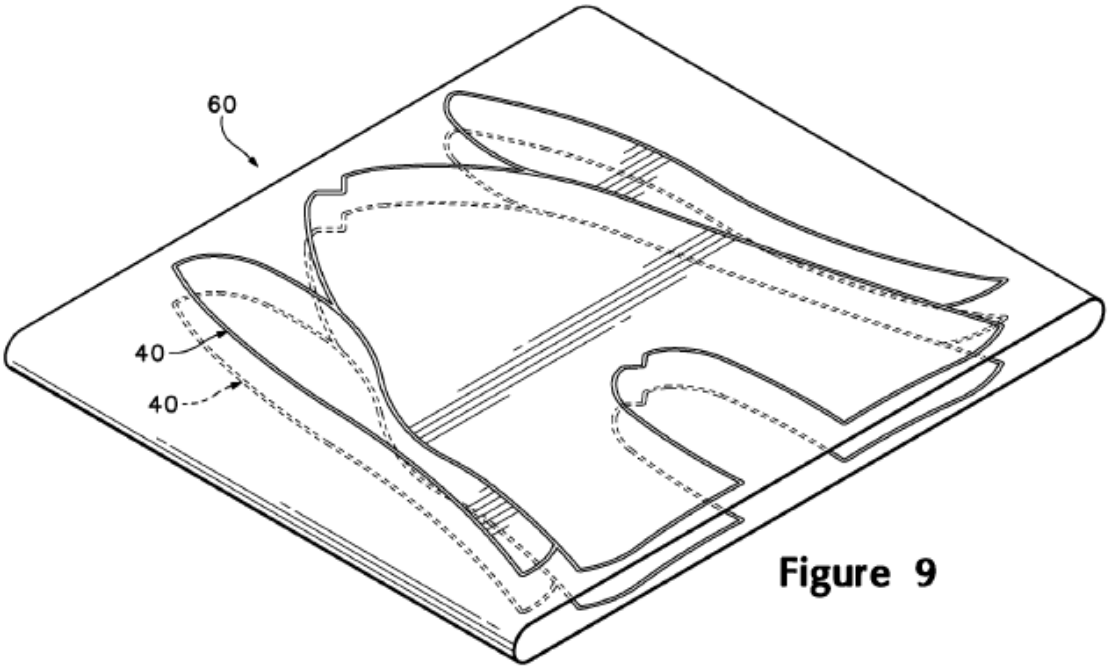

Figure 9

Figure 9 depicts textile structure 60 formed on a circular knitting machine. *Id.* at col. 7, ll. 38–39. For example,

> [a] suitable knitting machine for forming textile element 40 is a wide-tube circular knitting machine that is produced in the Lonati Group by Santoni S.p.A. of Italy under the SM8 TOP1 model number. This Santoni S.p.A. wide-tube circular knitting machine may form a textile structure having a diameter that ranges from 10 inches to 20 inches, with 8 feeds for each diameter.

Id. at col. 7, ll. 14–20. As discussed below, the types of stitches that form textile structure 60 may be varied to form an outline of one or more textile

Skechers EX1015
Skechers v Nike

elements 40 on textile structure 60. *Id.* at col. 7, l. 64–col. 8, l. 3. In particular, as depicted in Figure 9, the outlines for at least two textile elements 40 maybe formed on textile structure 60. *Id.* at col. 7, ll. 53–54.

Figure 8 of the ’749 patent is reproduced below.

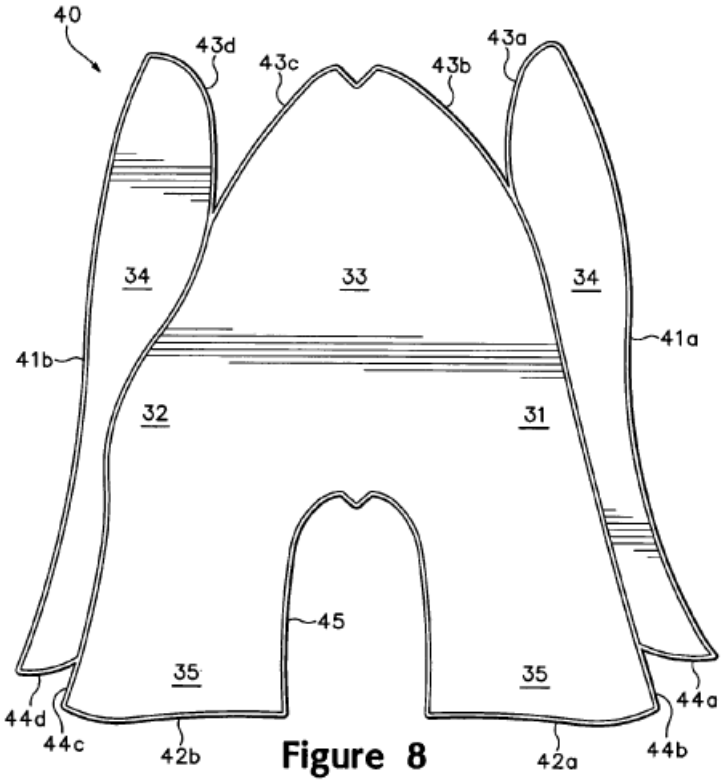

Figure 8

Figure 8 depicts an embodiment of an upper according to the ’749 patent. *Id.* at col. 5, l. 59–col. 6, l. 64. “Textile element 40 is a single material element that is formed to exhibit a unitary (i.e., one-piece) construction, and textile element 40 is formed or otherwise shaped to extend around the foot.” *Id.* at col. 5, ll. 40–43; *see also id.* at Figs. 10 (depicting textile element 40′), 11 (depicting textile element 40″). Consequently, textile element 40 is formed, such that portions of the textile element are not joined together with seams or other connections. *Id.* at col. 5, ll. 40–43. Edges 41a–44d are joined together as shown in Figures 3–5 to form seams

51–54, thereby forming at least a portion of a void for receiving the foot. *Id.* at col. 6, ll. 41–50. In contrast, lateral region 31, medial region 32, instep region 33, lower regions 34, and heel regions 35 together have a unitary construction without seams (*id.* at col. 5, ll. 46–58; col. 6, ll. 47–50).

Figure 11 of the ’749 patent is reproduced below.

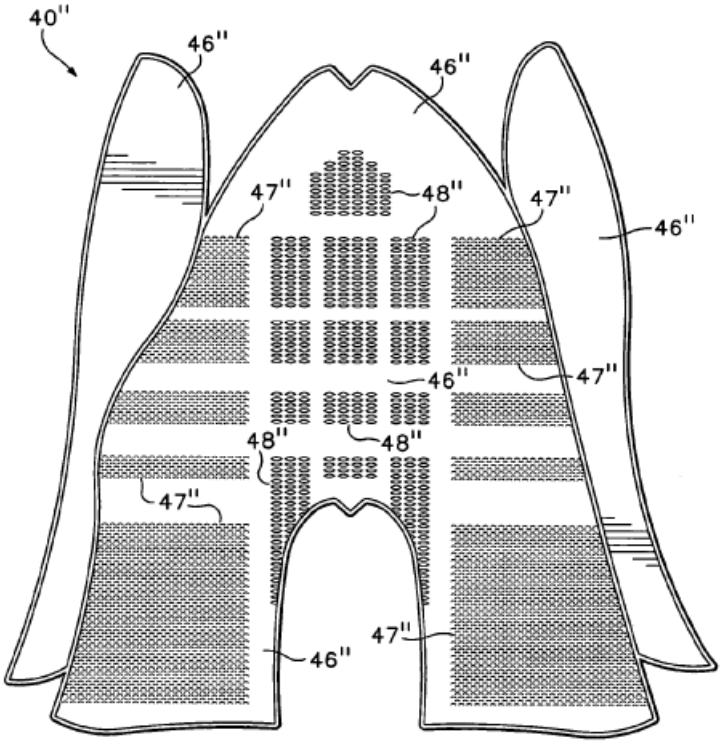

Figure 11

Figure 11 depicts another embodiment of an upper according to the ’749 patent. *Id.* at col. 9, l. 29–col. 10, l. 7. Textile element 40″ includes three different areas with three different textures. *Id.* at col. 9, ll. 31–32. First texture 46″ is generally smooth and extends in strips across lateral region 31, medial region 32, and instep region 33 of the upper. *Id.* at col. 9, ll. 32–35. In addition, textile element 40″ includes second texture 47″ and third texture 48″. *Id.* at col. 9, ll. 35–39. Moreover, the Specification of the ’749 patent describes that:

Skechers EX1015
Skechers v Nike

> The different textures 46″-48″ are formed *by merely varying the type of stitch formed* by the wide-tube circular knitting machine at each location of textile element 40″. Textures 46″-48″ may exhibit aesthetic differences, or the differences may be structural. . . . The air-permeability of textile element 40″ may also vary in the different areas.

Id. at col. 9, ll. 39–47 (emphasis added).

B. Illustrative Claim

Claims 1 and 13 are independent, method claims. Claims 2–9, 11, and 12 depend directly or indirectly from claim 1, and claims 14–19 and 21 depend directly or indirectly from claim 13. Claim 1 is illustrative of the claims at issue and is reproduced below:

> 1. A method of manufacturing an article of footwear, the method comprising:
>
> simultaneously knitting a textile element with a surrounding textile structure, the knitted textile element having at least one knitted texture that differs from a knitted texture in the surrounding knitted textile structure;
>
> removing the knitted textile element from the surrounding knitted textile structure;
>
> incorporating the knitted textile element into the article of footwear.

Id. at col. 11, ll. 43–52.

C. Related Proceedings

Neither party identifies any related litigation. Pet. 1, Paper 5, 2. As discussed above, the ’749 patent claims priority from the application that issued as the ’011 patent, which is the subject of IPR2013-00067. Pet. 1. In that case, the Board instituted *inter partes* review of claims 1–46 of the ’011 patent, and Patent Owner requested cancellation of claims 1–46 and

Skechers EX1015
Skechers v Nike

proposed substitute claims 47–50 in a Motion to Amend. This panel granted Patent Owner's request to cancel claims 1–46, but denied Patent Owner's request as to the substitute claims. Patent Owner appealed the Board's decision to the U.S. Court of Appeals for the Federal Circuit (the "Federal Circuit"). The Federal Circuit issued a decision in Patent Owner's appeal on February 11, 2016, which affirmed-in-part and vacated-in-part the Board's decision, and remanded the case to the Board for further proceedings regarding the status of the substitute claims. In addition, Petitioner has requested *inter partes* review of claims of related patents in IPR2016-00920 (U.S. Patent No. 8,042,288 B2) and IPR2016-00921 (U.S. Patent No. 7,814,598 B2). Paper 5, 2.

D. Applied References and Declaration

Petitioner relies on the following references and declaration in support of its asserted grounds of unpatentability:

Exhibit	References and Declaration
1003	Declaration of Mr. Lenny M. Holden
1006	U.S. Patent No. 3,985,003 to Reed, issued Oct. 12, 1976 ("Reed")
1007	U.S. Patent No. 4,038,840 to Castello, issued Aug. 2, 1977 ("Castello")
1008	U.S. Patent No. 6,330,814 B1 to Fujiwara, issued Dec. 18, 2001 ("Fujiwara")
1009	U.S. Patent No. 5,345,638 to Nishida, issued Sep. 13, 1994 ("Nishida")
1010	David J. Spencer, *Knitting technology: a comprehensive handbook and practical guide*, 1–413 (2001) (3rd Ed., Woodhead Publ. Ltd.) ("Spencer")
1012	International Standard, *Textile machinery — Knitting machines — Nominal diameters of circular machines*, 1–6 (2003) (2nd Ed., ISO 8117:2003(E)) ("ISO 8117")

Pet. iv.

Skechers EX1015
Skechers v Nike

E. Asserted Grounds of Unpatentability

Petitioner asserts the following grounds of unpatentability:

References	Basis	Challenged Claims
Reed and Nishida	35 U.S.C. § 103(a)	1–9, 11–19, and 21
Castello, Fujiwara, and Nishida	35 U.S.C. § 103(a)	1–9, 11–19, and 21

Pet. 7.

II. ANALYSIS

A. Claim Construction

In an *inter partes* review, claim terms in an unexpired patent are construed according to their broadest reasonable interpretation in light of the specification of the patent in which they appear. *See* 37 C.F.R. § 42.100(b); *Cuozzo Speed Techs., LLC v. Lee*, 136 S.Ct. 2131, 2144–46 (2016). Under that standard, claim terms are given their ordinary and customary meaning, as would be understood by one of ordinary skill in the art[3] in the context of the entire disclosure. *In re Translogic Tech., Inc.*, 504 F.3d 1249, 1257 (Fed. Cir. 2007). In its Petition, Petitioner proposes constructions for the following two claim terms.

[3] Petitioner argues that a person of ordinary skill in the relevant art would have at least a few years of experience in the footwear industry, a broad understanding of shoemaking, and an understanding of (1) the product cycle for the process of designing, developing and bringing a new product to market; (2) milestones for reviewing upper material designs; (3) the available and varied ranges of typical construction methods within a product cycle; and (4) the functional requirements of footwear and the range of material choices available. Pet. 8 (citing Ex. 1003 ¶ 34). For purposes of this Decision and to the extent necessary, we adopt Petitioner's assessment of a person of ordinary skill in the relevant art.

Skechers EX1015
Skechers v Nike

1. "a first area and a second area with a unitary construction" (Claims 11 and 21)

Petitioner argues that the term "a first area and a second area with a unitary construction" means "a textile element having a unitary construction and having a first area and a second area." Pet. 6. As Petitioner notes, this is the construction that this panel gave to the same term appearing in the substitute claims of the '011 patent. *adidas AG v. Nike, Inc.*, Case IPR2013-00067, 2013 WL 8595550, at *7 (PTAB May 17, 2013) (Paper 60). The '011 patent and the '749 patent share the same Specification, neither party contested our construction of this term in the appeal of our decision in the *inter partes* review of the claims of the '011 patent, and, at this time, Patent Owner does not contest Petitioner's proposed construction of this term in this case. Therefore, on this record and to the extent necessary for this Decision, we adopt Petitioner's proposed construction for this term.

2. "wide-tube circular knitting machine" (Claims 9 and 19)

Petitioner argues that the term "wide-tube circular knitting machine" means "a circular knitting machine with a nominal diameter of 7 inches or larger." Pet. 6. The Specification of the '749 patent identifies a wide-tube circular knitting machine, such as that produced in the Lonati Group by Santoni S.p.A., Italy, as a suitable example of the wide-tube circular knitting machine recited in the claims. *See* Ex. 1001, col. 7, ll. 12–37. In particular, the Specification of the '749 patent indicates that such knitting machines "may form a textile structure having a diameter that ranges from 10 inches to 20 inches, with 8 feeds for each diameter. The machine exhibits a maximum 140 revolutions per minute for 10 inch diameters, and a maximum 120 revolutions per minute for 13 inch diameters." *Id.* at col. 7, ll. 17–23.

Skechers EX1015
Skechers v Nike

Nevertheless, the Specification does not limit suitable, wide-tube circular knitting machines to this particular embodiment or to these particular diameters, and, as Petitioner acknowledges, the Specification "provides no other definition or explanation for what is meant by 'wide-tube circular knitting machine.'" Pet. 6. Instead, the Specification describes a wide-tube circular knitting machine functionally as one capable of knitting "body garment" sized textile tubes. Ex. 1001, col. 7, ll. 6–8.

Citing to the teachings of ISO 8117 (Ex. 1012) and the testimony of Petitioner's declarant, Mr. Holden (Ex. 1003 ¶ 97), Petitioner argues that "any circular knitting machine with a nominal diameter of 178 mm (7 inches) or larger is categorized as *a large (or wide-tube)* circular knitting machine." Pet. 6–7 (emphasis added). ISO 8117 describes "Large circular knitting machines" as having a nominal diameter of at least 178 mm (7 inches), but does not equate the terms "large" and "wide," or even use the term "wide." Ex. 1012, 6 (Table 1). Although Mr. Holden's testimony that "[t]he skilled person would also have understood that a circular knitting machine having a circumference of at least 22 inches (i.e., a nominal diameter of at least 7 inches) is a wide-tube circular knitting machine" is some evidence that ISO 8117 teaches that a wide-tube circular knitting machine has a nominal diameter of 178 mm (7 inches) or larger, the references relied upon by Petitioner to teach the wide-tube circular knitting machine arguably teach diameters larger even than those of the exemplary machine disclosed in the Specification of the '749 patent. Pet. 29–31 (citing Ex. 1003 ¶ 97); *see* Ex. 1001, col. 7, ll. 12–37.

Nevertheless, for purposes of this Decision, it is not necessary for us to construe this term to define *a minimum diameter* for a wide-tube circular

Skechers EX1015
Skechers v Nike

knitting machine. Therefore, on this record, we construe the term "wide-tube circular knitting machine" to mean "a circular knitting machine forming body garment sized, tubular textile structures, including those having a diameter that ranges from 10 inches to 20 inches."

3. Other Claim Terms

For purposes of this Decision, we discern no other claim terms that require express interpretation.

B. Obviousness over Reed and Nishida

1. Overview

Petitioner argues that claims 1–9, 11–19, and 21 are unpatentable under 35 U.S.C. § 103(a) as obvious over Reed and Nishida. *See supra* Section I.E. To support its arguments, Petitioner provides a detailed mapping of limitations of challenged claims to Reed and Nishida and to Castello, Fujiwara, and Nishida. Pet. 9–32 (Reed and Nishida), 33–56 (Castello, Fujiwara, and Nishida). Petitioner also cites Mr. Holden's Declaration for support. *See* Ex. 1003 ¶¶ 92–130, 145–200.

A patent claim is unpatentable under 35 U.S.C. § 103(a) if the differences between the claimed subject matter and the prior art are "such that the subject matter as a whole would have been obvious at the time the invention was made to a person having ordinary skill in the art to which said subject matter pertains." *KSR Int'l Co. v. Teleflex Inc.*, 550 U.S. 398, 406 (2007). The question of obviousness is resolved on the basis of underlying factual determinations, including: (1) the scope and content of the prior art; (2) any differences between the claimed subject matter and the prior art; (3)

Skechers EX1015
Skechers v Nike

the level of skill in the art;[4] and (4) objective evidence of nonobviousness, i.e., secondary considerations.[5] *Graham v. John Deere Co.*, 383 U.S. 1, 17–18 (1966). On this record and for the reasons set forth below, we are persuaded that Petitioner demonstrates a reasonable likelihood of prevailing in this challenge to claims 1–13 of the ’749 patent.

2. Reed (Ex. 1006)

Reed is directed to a method of manufacturing a wearable item, which includes, among other things, mechanically manipulating a yarn with a circular-knitting machine to form a cylindrical textile structure (Ex. 1006, col. 2, ll. 22–25), textile elements located in different portions of the textile structure (*id.* at col. 2, ll. 29–31), removing the textile elements from the textile structure ((*id.* at col. 3, ll. 12–19, col. 5, l. 67–col. 6, l. 5), and incorporating the textile element(s) “to form all types of garments worn by men, women and children” (*id.* at col. 1, ll. 33–35, col. 5, ll. 56–58).

Reed’s Figure 1 is reproduced below.

[4] *See supra* 8 n.3; *see also* Ex. 1003 ¶ 36 (“Based on my experience, I have an understanding of the capabilities of the skilled person in this field, and my opinions are provided from the perspective of such a person.”).
[5] The current record lacks evidence of secondary considerations. *See* Pet. 47–49; *Medtronic Inc. v. NuVasive Inc.*, Case IPR2014-00087, at 21 (PTAB Apr. 3, 2015) (Paper 44).

Skechers EX1015
Skechers v Nike

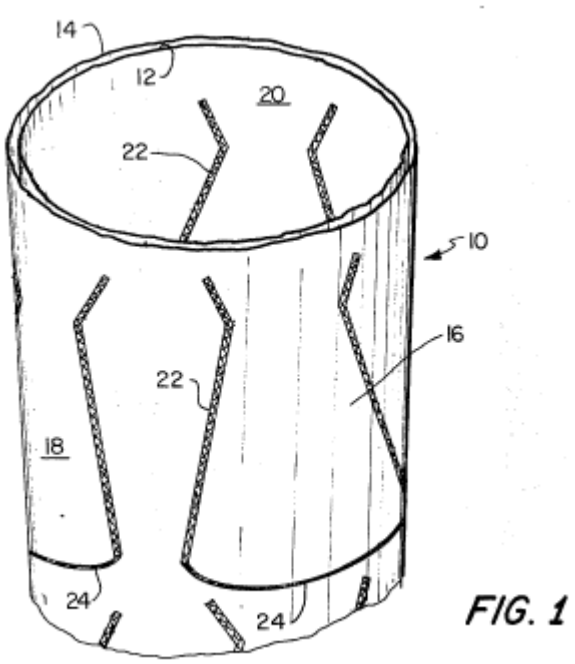

Figure 1 depicts tubular knitted structure 10, such as that produced by a circular knitting machine. *Id.* at col. 2, l. 66–col. 3, l. 1. Knitted structure 10 comprises inner tube 12 and outer tube 14, and

> [a]round the circumference of the knitted structure 10 are illustrated three garments which, for example, may be skirts 16, 18 and 20.[6] The garments 16, 18 and 20 arc outlined by a plurality of interconnecting knitted stitches 22 and 24. The interconnecting knitting 22 not only forms the outline of the garments 16, 18 and 20, but joins the inner tube 12 to the outer tube 14 so as to create a seam. The interconnecting knitting 24

---

[6] On this record, we are persuaded that "skirts" are "body garments." *See* Ex. 1003 ¶ 97:

> That fact alone would inform a skilled person at least as of March 3, 2004, that the circumference of the circular knitted tube must be at least large enough to accommodate the width of three skirts, and would certainly require a circumference larger than 22 inches, as each skirt (even sized for a child) would require more than 7 inches of space around the circumference of the knitted tube.

Skechers EX1015
Skechers v Nike

> is merely to define the lower outline of the skirt upon which the pattern may be cut.

Id. at col. 3, ll. 1–15.

Reed explains that the use of circular knitting machines in the garment industry was historically limited to making tubular, knitted garments, such as ladies stockings, sweaters, and other garments, wherein the entire knitted fabric was used as a unit to form one surface of a finished garment. Pet. 10–11 (citing Ex. 1006, col. 1, ll. 33–44; Ex. 1003 ¶ 94). Reed teaches that, with the introduction of computer pattern preparation equipment, "an era of unlimited pattern potential began." Ex. 1006, col. 1, ll. 45–48; *see* Ex. 1003 ¶ 95. "Computer electronic knitting brought about the possibilities of making patterns and designs of up to three million stitches (previously approximately 50,000 was maximum). With this system, patterns and designs are possible that before could not be made." Ex. 1006, col. 1, ll. 50–55; *see* Ex. 1003 ¶ 95. Reed further explains that its method uses "an electronic circular double knitting machine" and that an "object of the [Reed] invention is to provide a method of reducing the cost of manufacturing of garments by using the versatility of a computerized electronic knitting machine." Ex. 1006, col. 1, ll. 58–59, col. 2, ll. 23–25; Figs 1–6; *see* Ex. 1003 ¶ 95.

3. Nishida (Ex. 1009)

Nishida is directed to the production of a shoe upper by (1) cutting out a layout in the form of the shoe upper from a web of material and (2) shaping the shoe upper by connecting material parts of the layout by the formation of seams. *See generally* Nishida, Abstract. By the disclosed process, such shoe uppers allegedly may be produced efficiently and in

Skechers EX1015
Skechers v Nike

reduced time despite the many individual parts present or to be made visible. *Id.*

Figure 2 of Nishida is reproduced below.

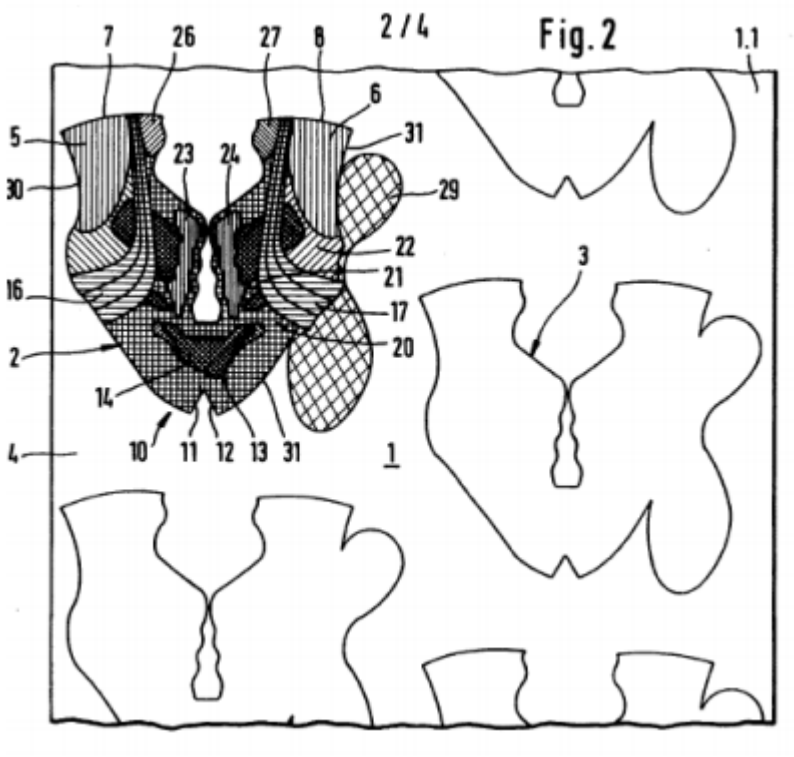

Figure 2 illustrates an embodiment of the upper layout according to Nishida. *Id.* at col. 3, ll. 6–12. Web of material 1 may include one or a plurality of layouts 2. Further, web of material 1 includes backing 4 that may be a knitted material, and different areas of layouts 2 may be formed by knitting different yarns or fibers on backing 4. *Id.* at col. 3, ll. 15–26; col. 5, l. 63–col. 6, l. 2.

Consequently, web of material 1 may be used to produce layouts 2 by different production measures, such as different styles, yarn material, color, material thickness, number of layers of material, or the like, simultaneously with the production of web of material 1. *Id.*; *see id.* at Figs. 1, 2. Each layout 2, including a sole part, may be cut from web of material 1 as a unit

Skechers EX1015
Skechers v Nike

and processed into an upper. *Id.* Nishida describes the manufacture of an article of footwear incorporating such an upper. *Id.* at col. 3, ll. 9–12; Fig. 3.

4. Limitations of the Challenged Claims

Petitioner argues that Reed and Nishida teaches or suggests all of the limitations of claims 1–9, 11–19, and 21 of the '749 patent. Pet. 9–32. In particular, Petitioner argues that Reed and Nishida teaches or suggests all of the limitations of each of independent claims 1 and 13. *Id.* at 13–19 (claim 1), 20–21 (claim 13). Although Petitioner appears to identify a disclosure from Nishida in its claim charts (*id.* at 13–21) as teaching each of the limitations of claims 1 and 13, Petitioner does not assert expressly that Nishida *alone* renders claim 1 or claim 13 unpatentable. Therefore, although Petitioner may argue and present evidence that Nishida alone renders claim 1 or claim 13 unpatentable, we decline to institute grounds not expressly asserted by Petitioner. *See supra* Section I.E.

a. Independent Claims 1 and 13

Initially, independent claim 1 recites "[a] method of manufacturing an article of footwear." Ex. 1001, col. 11, l. 43; *see also id.* at col. 12, l. 27 (claim 13). Reed teaches that its circular knitting methods may be used to manufacture "all types of garments." Ex. 1006, col. 5, ll. 56–57. Although Reed specifically identifies stockings and hosiery (*id.* at col. 1, ll. 33–35, col. 5, ll. 57–58) as garments manufactured by circular kitting, Reed does not describe shoes as "garments." Nevertheless, Nishida teaches that the web of material depicted in its Figures 1 and 2 is "produced by a *conventional* textile process." Ex. 1009, col. 3, ll. 6–7 (emphasis added). Thus, on this record, we are persuaded that Petitioner has shown that Reed

Skechers EX1015
Skechers v Nike

and Nishida teach or suggest a method of manufacturing an article of footwear.

The method of claim 1 further comprises the step of "simultaneously knitting a textile element with a surrounding textile structure, the knitted textile element having at least one knitted texture that differs from a knitted texture in the surrounding knitted textile structure." Ex. 1001, col. 11, ll. 45–48; *see also id.* at col. 12, ll. 29–39 (claim 13 reciting "the first knitted textile element located within a first portion of the knitted textile structure, the second knitted textile element located within a second portion of the knitted textile structure, varying at least one of the types of stitches or the types of yarns in the knitted textile structure to impart a texture to the first and second knitted textile elements different from a texture of the knitted textile structure extending between the first and second portions"). Reed clearly teaches simultaneously knitting a textile element, including producing body garments, such as skirts (*see id.* at Fig. 2), shirts and pants (*see id.* at Fig. 3), and dresses (*see id.* at Fig. 6), for men, women, and children (*id.* at col. 5, ll. 56–57) with a surrounding textile structure. Nishida also clearly supplies this limitation. Pet. 14–15. Nishida's Figure 2, reproduced above (*see supra* Section II.B.3.) depicts textile elements, such as layouts 2, with a surrounding textile structure, such as web of material 1. Pet. 15–16: *see* Ex. 1009, col. 3, ll. 15–26. Thus, we determine that either Reed or Nishida teaches or suggests "simultaneously knitting a textile element with a surrounding textile structure" and "the first knitted textile element located within a first portion of the knitted textile structure," as recited in independent claims 1 and 13, respectively.

Skechers EX1015
Skechers v Nike

With regard to the second part of this limitation of claims 1 and 13, which Petitioner refers to as limitations 1C and 13C, Petitioner argues that

> Reed describes using different types of stitches or yarns to impart a knitted texture to the textile element(s) that is different from a knitted texture in the surrounding textile structure. For example, Reed describes that the edges of the garments 16, 18, 20 are formed by interknitted stitches, whereas the remainder of the garments 16, 18, 20 are formed by non-interknitted stitches. . . . *Because the interknitted stitches are part of the garments 16, 18, 20, they form a texture in the garments that is different from the texture in the surrounding textile structure.*

Pet. 16 (emphasis added; citing Ex. 1006, col. 5, ll. 3–18; Ex. 1003 ¶¶ 108, 109). Similarly, Petitioner argues that Nishida teaches that

> "*only just those parts of the web of material are produced in the necessary quality, thickness, multilayers or the like which correspond to the pattern or to an area of a pattern of the shoe upper or the related shoe part.* The remaining area of the web of material in contrast can consist of a simple, lightweight or inexpensive material quality, which holds together only the patterns or areas of such patterns in the web of material after their completion."

Id. at 17 (emphasis added; quoting Ex. 1009, col. 2, ll. 12–20; citing Ex. 1003 ¶¶ 110–111). Thus, on this record, we determine that either Reed or Nishida supplies this limitation of independent claims 1 and 13.

The method of claim 1 further comprises the step of "removing the knitted textile element from the surrounding knitted textile structure." Ex. 1001, col. 11, ll. 49–50; *see also id.* at col. 12, ll. 40–41 (claim 13 recites "removing the first and second knitted textile element from the knitted textile structure"). Like with respect to the previous limitation, we are persuaded that Petitioner has shown that either Reed or Nishida teaches or

Skechers EX1015
Skechers v Nike

suggests this limitation of the independent claims. Pet. 18 (claim 1; citing, e.g., Ex. 1006, col. 3, ll. 12–19; Ex. 1009, col. 1, ll. 10–18); *id.* at 21 (claim 13); *see* Ex. 1003 ¶¶ 103–104.

Finally, the method of claim 1 further comprises the step of "incorporating the textile element into an upper of the article of footwear." Ex. 1001, col. 11, ll. 51–52; *see also id.* at col. 12, ll. 42–43 (claim 13). Petitioner relies solely on Nishida to supply this limitation, and we are persuaded, on this record, that Petitioner has shown that Nishida teaches or suggested this limitation of the independent claims. Pet. 16 (claim 1), 20 (claim 13); *see* Ex. 1003 ¶ 126.

Petitioner argues that a person of ordinary skill in the art would have had reason to combine the identified teachings of Reed and Nishida to achieve the methods recited in independent claims 1 and 13. Pet. 11–13. In particular, Petitioner argues that, because Reed teaches that its methods are applicable to "*all* types of garments" (Ex. 1006, col. 5, ll. 56–57 (emphasis added); *see* Ex. 1003 ¶ 131), a person of ordinary skill in the art would have had reason to apply the teachings of Reed to the processes and shoe parts of Nishida. Pet. 13 (citing Ex. 1003 ¶ 133). Further, Petitioner argues that, because both Reed and Nishida teach the advantages of reducing cost through the use of computer-controlled knitting machines, a person of ordinary skill in the art would have had reason to combine their teachings. Pet. 13 (citing Ex. 1003 ¶¶ 134–135). Finally, Petitioner argues that a person of ordinary skill in the art would have had reason to apply Reed's methods for producing textile elements, from which to produce garments, to produce Nishida's shoe upper patterns. *Id.*; *see KSR*, 550 U.S. at 417 ("[I]f a technique has been used to improve one device, and a person of ordinary

Skechers EX1015
Skechers v Nike

skill in the art would recognize that it would improve similar devices in the same way, using the technique is obvious unless its actual application is beyond his or her skill.”). Thus, we are persuaded that Petitioner has set forth sufficient reason at this initial stage of the proceeding for a person of ordinary skill in the relevant art to have combined the teachings of Reed and Nishida to achieve the recited methods of manufacturing an article of footwear.

b. Dependent Claims 2–9, 11, 12, 14–19, and 21

Petitioner argues that Reed teaches or suggests the additional limitations recited in claims 9 and 19 (*id.* at 29–31; *see supra* Section II.A.2.); that Nishida teaches or suggests the additional limitations recited in claims 7, 12, 17, and 18 (Pet. 25, 31–32); and that that Reed and/or Nishida teaches or suggests the additional limitations recited in claims 2–6, 8, 11, 14–16, and 21 (*id.* at 19, 21–29, 31; *see supra* Section II.A.1.). Petitioner provides a detailed mapping of the limitations of each of these dependent claims onto the teachings of Reed and/or Nishida. We find these mappings persuasive. Moreover, we are persuaded that, on this record, a person of ordinary skill in the relevant art would have had at least the same reason to combine the teachings of Reed and Nishida to achieve the methods recited in these dependent claims, as that given for combining the teachings of Reed and Nishida to achieve the recited methods of the independent claims. *See id.* at 11–13.

Although we have highlighted specific evidence and arguments for emphasis, we have reviewed the entirety of Petitioner’s analysis for independent claims 1 and 13, as well as the supporting testimony of Mr. Holden. Based on our review of the arguments and evidence, we conclude

Skechers EX1015
Skechers v Nike

that Petitioner has established a reasonable likelihood of prevailing on its challenge to independent claims 1 and 13 as rendered obvious by Reed and Nishida. Moreover, because Petitioner's arguments for the obviousness of dependent claims 2–9, 11, 12, 14–19, and 21 over Reed and Nishida, rely on the arguments and evidence presented with respect to independent claims 1 and 13, we also conclude that Petitioner has established a reasonable likelihood of prevailing on its challenge to the dependent claims.

5. Obviousness over Castello, Fujiwara, and Nishida

Petitioner argues that claims 1–9, 11–19, and 21 are unpatentable under 35 U.S.C. § 103(a) as obvious over Castello, Fujiwara, and Nishida. *See supra* Section I.E. In this asserted ground, Castello and Fujiwara, apparently, are cited together in lieu of the teachings of Reed. *See supra* Section I.E. Pursuant to 35 U.S.C. § 312(a)(3), a petition only may be considered if it "identifies, in writing and with particularity, each claim challenged, the grounds on which the challenge to each claim is based, and the evidence that supports the grounds for the challenge to each claim." Here, the fault in the Petition lies in its failure to identify "with particularity" the grounds and evidence that form the underlying basis for Petitioner's patentability challenge. For instance, with respect to claim 1, the claim chart offered to point out where the features of the claim are present in the prior art spans eight pages and constitutes bulk citation to portions of Castello, Fujiwara, and Nishida. *See* Pet. 37–44. Such an approach does not provide meaningful "particularity" sufficient for the panel to ascertain where, specifically, Petitioner identifies the limitations of the claim in the prior art.

Furthermore, again in connection with claim 1, the Petition cites to portions of Castello and Fujiwara for the same features of that claim, and

Skechers EX1015
Skechers v Nike

also submits parallel citation in some cases to portions of Nishida. Nevertheless, Petitioner does not articulate whether it contends that the teachings of Castello and Fujiwara are cumulative of one another, cumulative of Nishida, or both.[7] It is not evident from the Petition what features Petitioner argues are absent from Castello that it must rely on content of Fujiwara to supply. As noted above, the Supreme Court has instructed us that the obviousness analysis includes describing (1) the scope and content of the prior art and (2) any differences between the claimed subject matter and the prior art. *Graham*, 383 U.S. at 17–18. At least with respect to Castello and Fujiwara, Petitioner has failed to do so here. We are left to guess what limitations Petitioner seeks to supply from the teachings of each of those references. Petitioner's arguments, citations, and claim charts fail to provide appropriate guidance as to where limitations of the challenged claims are found with particularity and are not sufficient, here, to support the institution of *inter partes* review on this second ground.[8]

---

[7] With the exception of characterizing Castello as directed to "shirts" and Fujiwara as directed to "garments," Petitioner uses virtually identical language to describe the teachings of these references. *Compare* Pet. 33 (Castello: "incorporating the textile element(s) into *shirts* worn by men, women, and children" (emphasis added)), *with id.* at 34 (Fujiwara: "incorporating the textile element(s) into *garments* worn by men, women, and children" (emphasis added)).

[8] This second asserted ground addresses *all* of the challenged claims upon which we have instituted *inter partes* review based on Reed and Nishida, but Petitioner does not provide argument or evidence clearly favoring institution on one of the two asserted grounds over the other. *See* Pet. 57–58. Regardless, it would be within our discretion under 37 C.F.R. § 42.108(a) to deny institution on the additional ground.

Skechers EX1015
Skechers v Nike

Therefore, we *deny* this second ground and do not institute *inter partes* review based on it.

III. SUMMARY

We are persuaded that Petitioner has demonstrated a reasonable likelihood of prevailing on its challenge to claims 1–9, 11–19, and 21 of the ’749 patent as obvious over Reed and Nishida. We are not persuaded, however, that Petitioner has demonstrated a reasonable likelihood of prevailing on its challenge to claims 1–9, 11–19, and 21 of the ’749 patent as obvious over Castello, Fujiwara, and Nishida. At this stage of the proceeding, we have not made a final determination as to the patentability of any of these challenged claims or the construction of any claim term.

IV. ORDER

It is, therefore,

ORDERED that, pursuant to 35 U.S.C. § 314(a), an *inter partes* review of the ’749 patent is instituted on the grounds of obviousness of claims 1–9, 11–19, and 21 over Reed and Nishida;

FURTHER ORDERED that *inter partes* review is not authorized based on any other proposed ground of unpatentability; and

FURTHER ORDERED that pursuant to 35 U.S.C. § 314(c) and 37 C.F.R. § 42.4, notice is hereby given of the institution of a trial commencing on the entry date of this Decision.

Skechers EX1015
Skechers v Nike

PETITIONER:

Mitchell G. Stockwell
Vaibhav P. Kadaba
Tiffany L. Williams
KILPATRICK TOWNSEND & STOCKTON LLP
mstockwell@kilpatricktownsend.com
wkadaba@kilpatricktownsend.com
tiwilliams@kilpatricktownsend.com

PATENT OWNER:

Christopher J. Renk
Michael J. Harris
BANNER & WITCOFF, LTD
crenk@bannerwitcoff.com
mharris@bannerwitcoff.com
bwlitdocket@bannerwitcoff.com

Skechers EX1015
Skechers v Nike