Trials@uspto.gov
571-272-7822

Paper 21
Entered: October 19, 2017

UNITED STATES PATENT AND TRADEMARK OFFICE

BEFORE THE PATENT TRIAL AND APPEAL BOARD

adidas AG,
Petitioner,

v.

NIKE, Inc.,
Patent Owner.

Case IPR2016-00922
Patent 8,266,749 B2

Before JOSIAH C. COCKS, MICHAEL J. FITZPATRICK, and JAMES B. ARPIN, *Administrative Patent Judges.*

Opinion for the Board filed by *Administrative Patent Judge* ARPIN.

Opinion Concurring by *Administrative Patent Judge* FITZPATRICK.

ARPIN, *Administrative Patent Judge.*

FINAL WRITTEN DECISION
35 U.S.C. § 318(a) and 37 C.F.R. § 42.73

Skechers EX1017
Skechers v Nike

I. BACKGROUND

adidas AG ("Petitioner") filed a Petition pursuant to 35 U.S.C. §§ 311–319 to institute an *inter partes* review of claims 1–9, 11–19, and 21 of U.S. Patent No. 8,266,749 B2 (Ex. 1001, "the '749 patent").[1] Paper 2 ("Pet."). Nike, Inc. ("Patent Owner") did not file a Preliminary Response.[2] Applying the standard set forth in 35 U.S.C. § 314(a), which requires demonstration of a reasonable likelihood that Petitioner would prevail with respect to at least one challenged claim, we instituted an *inter partes* review of claims 1–9, 11–19, and 21 of the '749 patent. Paper 6 ("Inst. Dec."), 23.

After institution, Patent Owner filed a Patent Owner Response to the Petition (Paper 9 ("PO Resp.")), and Petitioner replied (Paper 10 ("Reply")).[3] Each party requested an oral hearing (Papers 15 and 16); and

---

[1] Petitioner identifies adidas International B.V.; adidas North America, Inc.; adidas America, Inc.; and adidas International, Inc., as real parties-in-interest. Pet. 1.

[2] Patent Owner identifies only itself, as a real party-in-interest. Paper 5, 2.

[3] Patent Owner filed objections to the admissibility of some of Petitioner's evidence. Paper 12. Petitioner served – and improperly filed – supplemental evidence in response to Patent Owner's objections. Paper 13; Ex. 1015; 37 C.F.R. § 42.64(c); *see* 37 C.F.R. § 42.64(b)(2) ("The party relying on evidence to which an objection is timely served may respond to the objection *by serving* supplemental evidence within ten business days of service of the objection." (emphasis added)); *GoPro, Inc. v. Contour IP Holding LLC*, Case IPR2015-01078, slip op. at 2–3 (PTAB Apr. 7, 2016) (Paper 40) ("If the supplemental evidence does not cure the objection and the opposing party files a motion to exclude, the submitting party may file the supplemental evidence with its opposition to the motion to exclude."). Ultimately, Patent Owner did not file a motion to exclude, and, therefore, Patent Owner did not preserve its objections. 37 C.F.R. § 42.64(c). Regardless, Exhibit 1015 is expunged because we did not authorize its filing.

Skechers EX1017
Skechers v Nike

we held a consolidated oral hearing with Case IPR2016-00921 on July 12, 2017. A transcript of that hearing is of record in this case. Paper 20 ("Tr.").

We have jurisdiction under 35 U.S.C. § 6, and this Final Written Decision, issued pursuant to 35 U.S.C. § 318(a) and 37 C.F.R. § 42.73, addresses issues and arguments raised during the review. For the reasons discussed below, we determine that Petitioner has not met its burden to prove, by a preponderance of the evidence, that claims 1–9, 11–19, and 21 of the '749 patent are unpatentable on the ground upon which we instituted *inter partes* review.

A. The '749 Patent

The '749 patent claims priority from U.S. Patent Application No. 10/791,289, filed on March 3, 2004, now issued as U.S. Patent No. 7,347,011 B2 ("the '011 patent") (Ex. 1001 at (60)) and relates to articles of footwear incorporating an upper that is at least partially formed from a textile material (*id.* at 1:20–23). Conventional articles of athletic footwear may include two primary elements: an upper and a sole structure. *Id.* at 1:25–28. The upper may form a void in the interior of the footwear for receiving a wearer's foot, and the upper may extend over the instep and toe areas, along the medial and lateral sides, and around the heel area of the wearer's foot. *Id.* at 1:42–47.

In particular, the Specification describes articles of footwear having an upper incorporating a knitted textile element and having a sole structure secured to the upper. *Id.* at 3:27–33. Methods for manufacturing an article of footwear include "mechanically-manipulating a yarn with a circular knitting machine, for example, to form a cylindrical textile structure. In addition, the method involves removing at least one textile element from the

Skechers EX1017
Skechers v Nike

textile structure, and incorporating the textile element into an upper of the article of footwear." *Id.* at 3:41–46.

Figure 9 of the '749 patent is reproduced below.

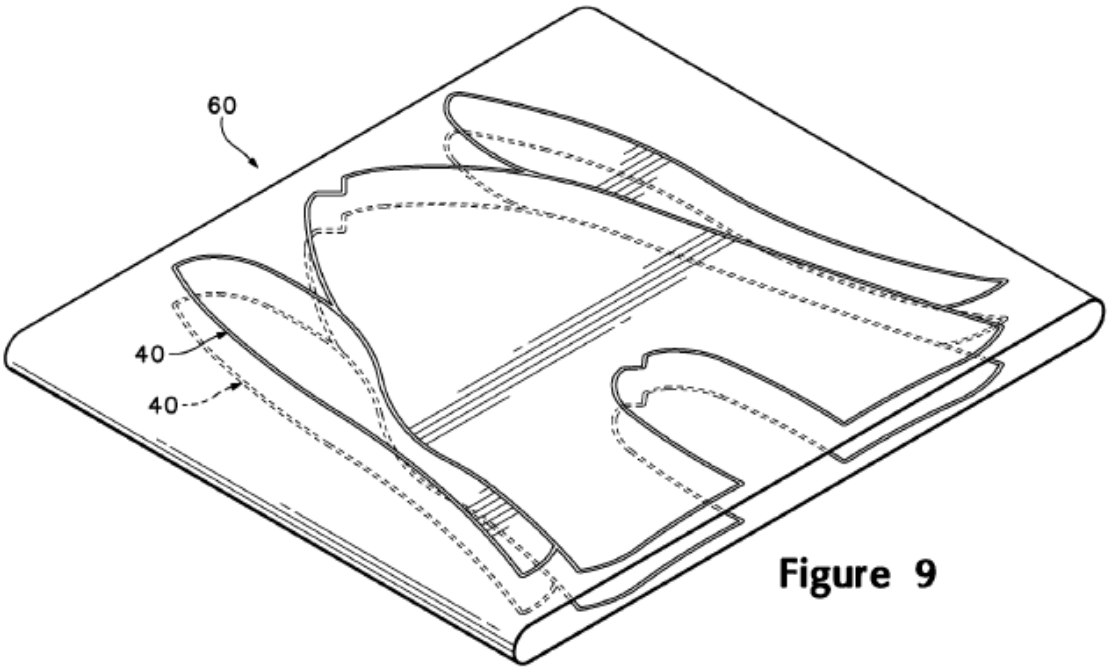

Figure 9

Figure 9 depicts textile structure 60 formed on a circular knitting machine. *Id.* at 7:38–39. For example,

> [a] suitable knitting machine for forming textile element 40 is a wide-tube circular knitting machine that is produced in the Lonati Group by Santoni S.p.A. of Italy under the SM8 TOP1 model number. This Santoni S.p.A. wide-tube circular knitting machine may form a textile structure having a diameter that ranges from 10 inches to 20 inches, with 8 feeds for each diameter.

Id. at 7:14–20. As discussed below, the types of stitches that form textile structure 60 may be varied to form an outline of one or more textile elements 40 on textile structure 60. *Id.* at 7:64–8:3. In particular, as depicted in Figure 9, the outlines for at least two textile elements 40 may be formed on textile structure 60. *Id.* at 7:53–54.

Skechers EX1017
Skechers v Nike

Figure 8 of the ’749 patent is reproduced below.

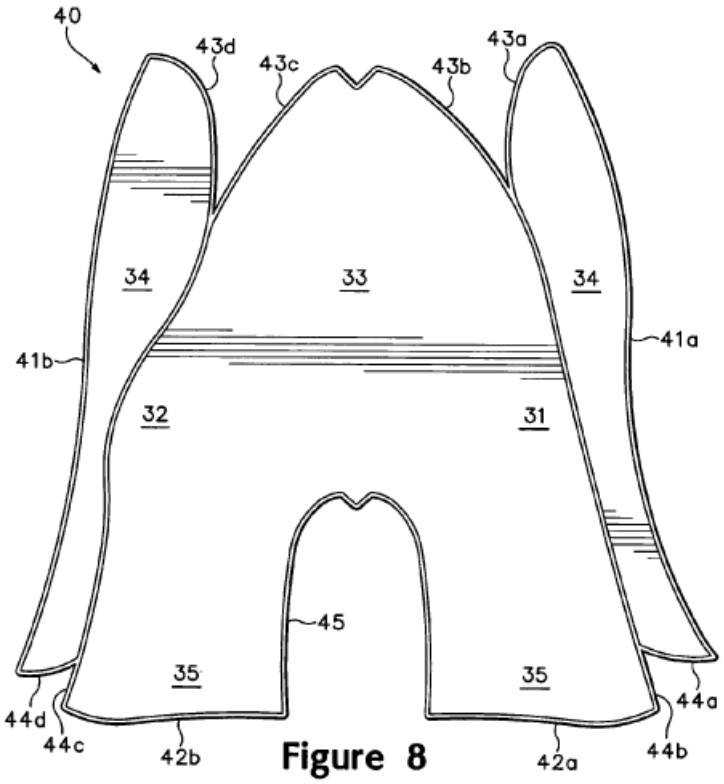

Figure 8

Figure 8 depicts an embodiment of an upper according to the ’749 patent. *Id.* at 5:59–6:64. “Textile element 40 is a single material element that is formed to exhibit a unitary (i.e., one-piece) construction, and textile element 40 is formed or otherwise shaped to extend around the foot.” *Id.* at 5:40–43; *see also id.* at Figs. 10 (depicting textile element 40′), 11 (depicting textile element 40″). In particular,

> Textile element 40 is a single material element with a unitary construction, as discussed above. *As defined for purposes of the present invention, unitary construction is intended to express a configuration wherein portions of a textile element are not joined together by seams or other connections, as depicted with textile element 40 in FIG. 8.* Although the various edges 41a-44d are joined together to form seams 51-54,

Skechers EX1017
Skechers v Nike

> the various portions of textile element 40 are formed as [a] unitary element *without seams* . . . .

Id. at 6:41–50 (emphases added). Consequently, textile element 40 is formed, such that portions of the textile element are not joined together with seams or other connections. *Id.* at 5:40–43. Edges 41a–44d are joined together as shown in Figures 3–5 to form seams 51–54, thereby forming at least a portion of a void for receiving the foot. *Id.* at 6:41–50. In contrast, lateral region 31, medial region 32, instep region 33, lower regions 34, and heel regions 35 together have a unitary construction without seams (*id.* at 5:46–58, 6:47–50). Referring to Figure 9,

> a first textile element 40 and a second textile element 40 may be *simultaneously* formed in a single textile structure 60. As the diameter of textile element 60 is increased or the width of textile element 40 decreases, however, an even greater number of textile elements 40 may be outlined on textile structure 60.

Id. at 7:58–63 (emphasis added).

Figure 11 of the ’749 patent is reproduced below.

Skechers EX1017
Skechers v Nike

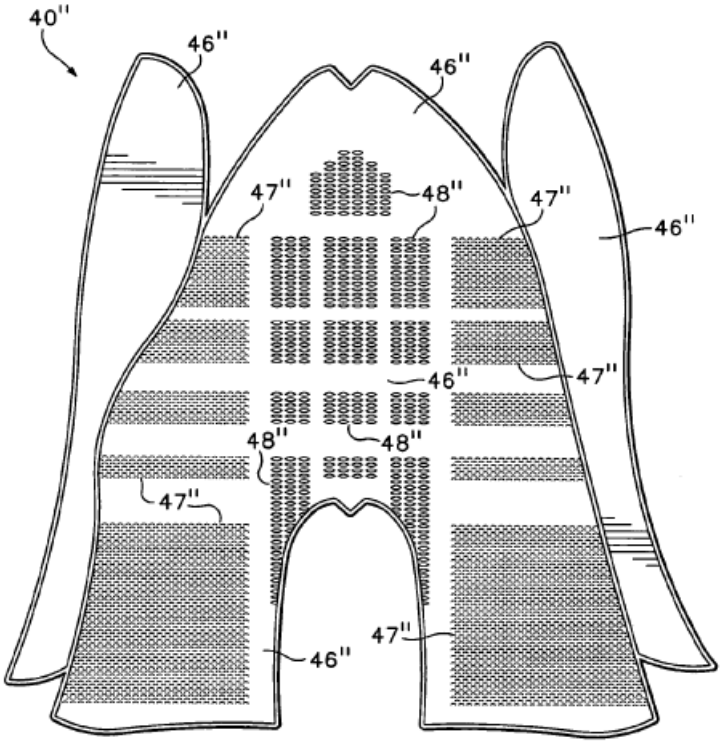

Figure 11

Figure 11 depicts another embodiment of an upper according to the ’749 patent. *Id.* at 9:29–10:7. Textile element 40″ includes three different areas with three different textures. *Id.* at 9:31–32. First texture 46″ is generally smooth and extends in strips across lateral region 31, medial region 32, and instep region 33 of the upper. *Id.* at 9:32–35. In addition, textile element 40″ includes second texture 47″ and third texture 48″. *Id.* at 9:32–35. Moreover, the Specification of the ’749 patent describes that:

> The different textures 46″-48″ are formed *by merely varying the type of stitch formed* by the wide-tube circular knitting machine at each location of textile element 40″. Textures 46″-48″ may exhibit aesthetic differences, or the differences may be structural. . . . The air-permeability of textile element 40″ may also vary in the different areas.

Id. at 9:39–47 (emphasis added).

Skechers EX1017
Skechers v Nike

B. Illustrative Claim

Claims 1 and 13 are independent, method claims. Claims 2–9, 11, and 12 depend directly or indirectly from claim 1, and claims 14–19 and 21 depend directly or indirectly from claim 13. Claims 1 and 11 are illustrative of the claims at issue and are reproduced below:

> 1. A method of manufacturing an article of footwear, the method comprising:
>
> simultaneously knitting a textile element with a surrounding textile structure, the knitted textile element having at least one knitted texture that differs from a knitted texture in the surrounding knitted textile structure;
>
> removing the knitted textile element from the surrounding knitted textile structure;
>
> incorporating the knitted textile element into the article of footwear.
>
> 11. The method of claim 1, wherein simultaneously knitting a textile element with a surrounding textile structure includes forming the knitted textile element to include a first area and a second area with a unitary construction, the first area being formed of a first stitch configuration, and the second area being formed of a second stitch configuration that is different from the first stitch configuration to impart varying textures to a surface of the knitted textile element.

Id. at 11:43–52 (claim 1), 12:14–21 (claim 11).

C. Related Proceedings

Neither party identifies any related litigation. Pet. 1; Paper 5, 2. As discussed above, the ’749 patent is a continuation of the application that issued as the ’011 patent, which is the subject of IPR2013-00067. Pet. 1. In that case, the panel instituted *inter partes* review of claims 1–46 of the ’011 patent, and Patent Owner requested cancellation of claims 1–46 and

Skechers EX1017
Skechers v Nike

proposed substitute claims 47–50 in a Motion to Amend. The panel granted Patent Owner's request to cancel claims 1–46, but denied Patent Owner's request as to the substitute claims. Patent Owner appealed the Board's decision to the U.S. Court of Appeals for the Federal Circuit (the "Federal Circuit"). The Federal Circuit issued a decision in Patent Owner's appeal on February 11, 2016, which affirmed-in-part and vacated-in-part the Board's decision, and remanded the case to the Board for further proceedings regarding the status of the substitute claims. *Nike, Inc. v. adidas AG*, 812 F.3d 1326, 1329 (Fed. Cir. 2016). The Federal Circuit issued its mandate in that case on April 4, 2016. In addition, Petitioner has requested *inter partes* review of claims of related patents in IPR2016-00920 (U.S. Patent No. 8,042,288 B2), institution denied, and IPR2016-00921 (U.S. Patent No. 8,266,749 B2), institution granted. Paper 5, 2.

D. Applied References and Declaration

Petitioner relies on the following references and declaration in support of its asserted ground of unpatentability:

Exhibit	References and Declaration
1003	Declaration of Mr. Lenny M. Holden
1006	U.S. Patent No. 3,985,003 to Reed, issued Oct. 12, 1976 ("Reed")
1009	U.S. Patent No. 5,345,638 to Nishida, issued Sept. 13, 1994 ("Nishida")
1010	David J. Spencer, *Knitting technology: a comprehensive handbook and practical guide*, 1–413 (2001) (3rd Ed., Woodhead Publ. Ltd.) ("Spencer")
1012	International Standard, *Textile machinery — Knitting machines — Nominal diameters of circular machines*, 1–6 (2003) (2nd Ed., ISO 8117:2003(E)) ("ISO 8117")

Pet. iv.

Skechers EX1017
Skechers v Nike

E. Instituted Ground of Unpatentability

We instituted review on the following ground of unpatentability:

References	Basis	Challenged Claims
Reed and Nishida	35 U.S.C. § 103(a)	1–9, 11–19, and 21

Pet. 7.

II. ANALYSIS

A. Person of Ordinary Skill in the Art

Petitioner argues that a person of ordinary skill in the relevant art would have at least a few years of experience in the footwear industry, *a broad understanding of shoemaking*, and an understanding of (1) the product cycle for the process of designing, developing and bringing a new product to market; (2) milestones for reviewing upper material designs; (3) *the available and varied ranges of typical construction methods within a product cycle*; and (4) the functional requirements of footwear and the range of material choices available. Pet. 8 (citing Ex. 1003 ¶ 34). Patent Owner contests Petitioner's assessment of the level of ordinary skill in the relevant art, but does not propose an alternative assessment. PO Resp. 17–19.

Initially, Patent Owner contends that Petitioner has failed to consider appropriate factors identified by our reviewing court and utilized by other panels to assess the level of ordinary skill in the art. *Id.* at 17–18. We agree with Petitioner that it is not necessary to consider every factor or to weigh the factors equally in order to assess the level of ordinary skill in the art. Reply 2 (quoting *In re GPAC Inc.*, 57 F.3d 1573, 1579 (Fed. Cir. 1995)). Here, we may rely on Petitioner's declarant's testimony (Ex. 1003 ¶ 34) and the teachings of the prior art to evaluate Petitioner's assessment of the level

Skechers EX1017
Skechers v Nike

of ordinary skill in the art. *Okajima v. Bourdeau*, 261 F.3d 1350, 1355 (Fed. Cir. 2001). In particular, Reed and Nishida identify the types of problems encountered in the art prior art solutions to these problems, and the sophistication of the technology. *E.g.*, Ex. 1006, 1:13–55; Ex. 1009, 1:10–36; *see, e.g.*, Ex. 1007, 1:8–32, 2:12–64; Ex. 1008, 1:11–54; Ex. 1010, 145–160; *see also* Ex. 1010, Preface ("The aim of this book is to combine in a single volume the fundamental principles of weft and warp knitting in such a manner that its contents are useful to readers in education, industry or commerce. It thus [fulfills] the long felt need for a comprehensive up-to-date textbook explaining this important sector of textile technology.").

Patent Owner contends that the level of ordinary skill in the art is "low" (PO Resp. 17–18), but it is not clear whether Patent Owner further contends that Petitioner's assessment is deficient because Petitioner fails to argue that a person possessing such a "low" level of ordinary skill in the art also would have "experience using knitting technologies to create knitted footwear uppers" (*id.* at 18–19) or whether the inclusion of such skill would raise the "low" level of skill in the art (*id.* at 19). Alternatively, Patent Owner may merely be contending that Petitioner's declarant fails to qualify as a person of ordinary skill in the art. *Id.* at 19 ("If it was too 'dangerous' for Mr. Holden with his nearly forty years of experience, a person with just a 'few years of experience' would not have had any knitting experience, let alone experience using knitting technologies to create uppers."); *see* Tr. 62:17–22. Patent Owner is not required to help us assess the level of ordinary skill in the art and does not do so here. *See* PO Resp. 22 ("Petitioner may criticize NIKE for not submitting an expert declaration.

Skechers EX1017
Skechers v Nike

But it is Petitioner's burden to prove unpatentability; it is not NIKE's burden to prove patentability.").

In response to Patent Owner's contentions, Petitioner argues that the level of ordinary skill in the art is not low and that hands-on knitting experience is not required. Reply 2–3. Petitioner further argues Patent Owner has not required knitting experience in its previous assessment with respect to a related patent of the level of ordinary skill in the art. *Id.* at 2 (citing IPR2013-00067, Ex. 2010 ¶ 52). Based on the record before us and to the extent necessary, we again adopt Petitioner's assessment of a person of ordinary skill in the relevant art. Inst. Dec. 8 n.3.

B. Claim Construction

In an *inter partes* review, claim terms in an unexpired patent are construed according to their broadest reasonable interpretation in light of the specification of the patent in which they appear. 37 C.F.R. § 42.100(b). Under that standard, claim terms are given their ordinary and customary meaning, as would be understood by one of ordinary skill in the art in the context of the entire disclosure. *In re Translogic Tech., Inc.*, 504 F.3d 1249, 1257 (Fed. Cir. 2007). The following four claim terms are at issue in this proceeding.

1. "a first area and a second area with a unitary construction" (Claims 11 and 21)

Petitioner argues that the term "a first area and a second area with a unitary construction" means "a textile element having a unitary construction and having a first area and a second area." Pet. 6. As Petitioner notes, this is the construction that this panel gave to the same term appearing in the substitute claims of the '011 patent. *adidas AG v. Nike, Inc.*, Case IPR2013-

Skechers EX1017
Skechers v Nike

00067, slip op. at 16–17 (PTAB Apr. 28, 2014) (Paper 60). We further note that the ’749 patent’s Specification provides that “[a]s defined for purposes of the present invention, unitary construction is intended to express a configuration *wherein portions of a textile element are not joined together by seams or other connections*, as depicted with textile element 40 in FIG. 8.” Ex. 1001, 6:42–46 (emphasis added); *see* IPR2013-00067, Ex. 1002, 6:41–46 (identical disclosure). The ’011 patent and the ’749 patent share the same Specification (apart from their claims), neither party contested our construction of this term in the appeal of our decision in the *inter partes* review of the claims of the ’011 patent, and Patent Owner does not contest Petitioner’s proposed construction of this term in this proceeding. Therefore, in view of the express definition of the phrase “unitary construction” in the Specification of the ’749 patent, we adopt Petitioner’s proposed construction as the broadest reasonable interpretation for this term. *See* Tr. 20:5–13, 37:11–17.

2. “wide-tube circular knitting machine” (Claims 9 and 19)

We determine that the broadest reasonable interpretation of the term “wide-tube circular knitting machine” is “a circular knitting machine forming body garment sized, tubular textile structures, including those having a diameter that ranges from 10 inches to 20 inches.” *See* Inst. Dec. 9–11. Neither party contests this construction. *See* Tr. 20:5–13, 37:11–17.

3. “impart” (claims 11 and 21) and “texture” (claims 8, 11, and 21)

During the course of the review, the parties raised issues regarding the construction of two additional terms that appear only in the challenged dependent claims. First, Petitioner argues that the term “impart” means “to

Skechers EX1017
Skechers v Nike

give, convey, or grant from." Reply 24 (citing Ex. 1014).[4] Further, Petitioner argues that this definition is consistent with the use of the word "impart" in the Specification of the '749 patent. *E.g.*, Ex. 1001, Abstract, 1:30–35, 1:60–63, 1:65–2:3, 3:33–37, 7:35–37; *see* Tr. 21:4–14. Patent Owner does not propose an alternative construction for the term "impart." Further, neither party argues that the term "impart" carries special meaning in the relevant art. In fact, we find Spencer's use of the word "impart" in the handbook on knitting technology consistent with Petitioner's dictionary definition and the word's use in the Specification of the '749 patent. *See* Ex. 1010, 189. Thus, to the extent any construction of this term is necessary, we find that the broadest reasonable interpretation of the term "impart" is "to give, convey, or grant from." *See Summit 6, LLC v. Samsung Elecs. Co.*, 802 F.3d 1283, 1291 (Fed. Cir. 2015) ("[E]ach [term] is used in common parlance and has no special meaning in the art. Because the plain and ordinary meaning of the disputed claim language is clear, the district court did not err by declining to construe the claim term.").

Second, although Petitioner does not provide an express interpretation for the term "texture,"[5] Petitioner's declarant testifies "texture" "generally

---

[4] Petitioner relies on a definition of "impart" from a current, on-line dictionary rather than from a dictionary contemporaneous with the effective filing date of the '749 patent. However, the record contains no suggestion that the relevant definition of "impart" has changed since the effective filing date of the '749 patent, and we determine that it has not. *See* RANDOM HOUSE WEBSTER'S COLLEGE DICTIONARY, 659 (2nd ed. 1999) (Ex. 3001) ("impart" means "to give; bestow").

[5] A relevant dictionary definition of the word "texture" is "the characteristic structure of the threads, fibers, etc., that make up a textile fabric: *course texture*," "a rough or grainy surface quality," or "anything produced by weaving; woven fabric." Ex. 3001, 1351.

Skechers EX1017
Skechers v Nike

could be an actual texture or a perceived texture based on the arrangement of colors in a pattern." Reply 4–5 (citing Ex. 2004, 178:20–24; *see also id.* at 177:1–178:19, 178:25–184:11). Patent Owner disputes Mr. Holden's interpretation of "texture," which appears inconsistent with Spencer's discussion of texture. *See* Ex. 2004, 80:24–81:8. In particular, according to Spencer, "[c]olour is one of the five ingredients of fashion, the other four being style, silhouette, *texture* and pattern." Ex. 1010, 127 (emphasis added). Thus, Spencer appears to distinguish between color and texture.

The Specification of the '749 patent does not define "texture," but contrasts between "smooth" and "textured" areas of a textile element. Ex. 1001, 9:23–24. Moreover, with respect to Figure 11, the Specification of the '749 patent explains that:

> The different textures 46"-48" are formed by merely varying the type of stitch formed by the wide-tube circular knitting machine at each location of textile element 40". Textures 46"-48" may exhibit aesthetic differences, or the differences may be structural. For example, the degree of stretch in areas with textures 46"-48" may be different, or the wear resistance of the areas may vary depending upon the stitch utilized. The air-permeability of textile element 40" may also vary in the different areas. Third texture 48" is formed to include a plurality of apertures that extend through textile element 40". The apertures may be formed by omitting stitches at specific locations during the wide-tube circular knitting process, and the apertures facilitate the transfer of air between the void within upper 20 and the area outside of upper 20. *Accordingly, the various stitches formed in textile element 40", or one of textile elements 40 or 40', may be utilized to vary the texture, physical properties, or aesthetics of footwear 10 within a single, unitary element of material.*

Id. at 9:39–57 (emphasis added). From this explanation, we understand that "texture," as used in the '749 patent, is distinguishable from the physical and

Skechers EX1017
Skechers v Nike

aesthetic properties of a textile element. According to the recitations of claims 11 and 21, "texture" is produced as part of the step recited in claims 1 and 13 of "simultaneously knitting a textile element with a surrounding textile structure." *See* Ex. 1001, 11:45–46. Thus, to the extent any construction of this term is necessary, we find that the broadest reasonable interpretation of the term "texture" in the context of claims 11 and 21 is "a non-smooth surface formed while simultaneously knitting a textile element with a surrounding textile structure." Such a surface may be created by "varying the type of stitch formed by the wide-tube circular knitting machine at each location of textile element." *Id.* at 9:39–42.

4. Other Claim Terms

For purposes of this Final Written Decision, we discern no other claim terms that require express interpretation.

C. Obviousness over Reed and Nishida

1. Overview

Petitioner argues that claims 1–9, 11–19, and 21 are unpatentable under 35 U.S.C. § 103(a) as obvious over the combined teachings of Reed and Nishida. To support its arguments, Petitioner provides a detailed mapping of limitations of the challenged claims to Reed and Nishida. Pet. 13–32. Petitioner also cites Mr. Holden's Declaration for support. *See* Ex. 1003 ¶¶ 91–138.

A patent claim is unpatentable under 35 U.S.C. § 103(a) if the differences between the claimed subject matter and the prior art are "such that the subject matter as a whole would have been obvious at the time the invention was made to a person having ordinary skill in the art to which said

Skechers EX1017
Skechers v Nike

subject matter pertains." *KSR Int'l Co. v. Teleflex Inc.*, 550 U.S. 398, 406 (2007). The question of obviousness is resolved on the basis of underlying factual determinations, including: (1) the scope and content of the prior art; (2) any differences between the claimed subject matter and the prior art; (3) the level of skill in the art;[6] and (4) objective evidence of nonobviousness, *i.e.*, secondary considerations.[7] *See Graham v. John Deere Co.*, 383 U.S. 1, 17–18 (1966). On this record and for the reasons set forth below, we are not persuaded that Petitioner demonstrates by a preponderance of the evidence that claims 1–9, 11–19, and 21 of the '749 patent are unpatentable as rendered obvious over the combined teachings of Reed and Nishida.

2. Reed (Ex. 1006)

Reed is directed to a method of manufacturing a wearable item, which includes, among other things, simultaneously knitting two concentric tubes with a circular-knitting machine to form a cylindrical textile structure (Ex. 1006, Abstract, 1:58–64, 2:22–25, 3:3–5), textile elements located in different portions of the textile structure (*id.* at 2:29–31), removing the textile elements from the textile structure (*id.* at 3:12–19, 5:67–6:5), and incorporating the textile element(s) "to form *all types of garments* worn by men, women and children" (*id.* at 5:56–58 (emphasis added); *see id.* at 1:33–

[6] *See supra* Section II.A.; *see also* Ex. 1003 ¶ 36 ("Based on my experience, I have an understanding of the capabilities of the skilled person in this field, and my opinions are provided from the perspective of such a person.").

[7] The record lacks arguments or evidence of secondary considerations. *See generally* PO Resp.

Skechers EX1017
Skechers v Nike

35).[8] In particular, Reed describes methods of making preseamed garments (*id.* at 3:8–21) or preseamed sections of a garment, which sections may be seamed together "by standard practices" to form a garment (*id.* at 6:10–17). As Reed explains,

> *From the preceding description of the preferred embodiments, it is evident that the objects of the invention are obtained to produce a preformed and preseamed fabric on a circular knitting machine so as to reduce time, cost and labor involved in making garments.* The types of program used to form the final product is to be varied with the imagination of the programmer, as well as the type of product which may be formed. The essence of the present invention is a garment formed of juxtaposed sections of simultaneously knitted, concentric tubes interconnected by knitting.

Id. at 6:18–28 (emphasis added).

Reed's Figure 1 is reproduced below.

[8] Patent Owner contends that Reed is not analogous art. PO Resp. 34–36. In particular, Patent Owner contends that Reed is not from the same field of endeavor as the challenged claims and that Reed's teachings are not reasonably pertinent to the particular problem with which the recited methods are involved. *Id.* at 34–35. Because Reed is directed to the manufacture of all types of garments, including footwear (Reply 12–13; *see* Ex. 1006, 1:33–44), and Reed is related directly to preparation of garments layouts from a knitted textile structure (Reply 14–15; *see* Ex. 1006, 2:29–35), we are persuaded that Reed is analogous art to the challenged claims.

Skechers EX1017
Skechers v Nike

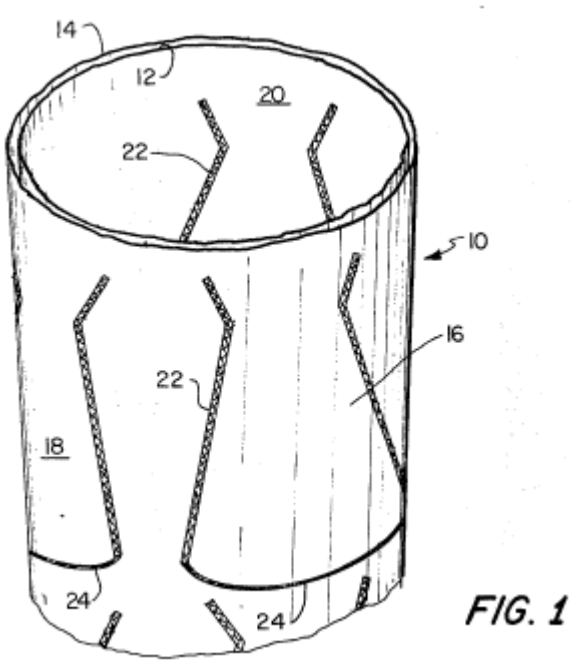

Figure 1 depicts tubular knitted structure 10, such as that produced by a circular knitting machine. *Id.* at 2:66–3:1. Knitted structure 10 comprises inner tube 12 and outer tube 14, and

> [a]round the circumference of the knitted structure 10 are illustrated three garments which, for example, may be skirts 16, 18 and 20.[9]
>
> The garments 16, 18 and 20 are outlined by a plurality of interconnecting knitted stitches 22 and 24. *The interconnecting knitting 22 not only forms the outline of the garments 16, 18 and 20, but joins the inner tube 12 to the outer tube 14 so as to create a seam.* The interconnecting knitting 24 is merely to define the lower outline of the skirt upon which the pattern may be cut.

Id. at 3:1–15 (emphasis added).

Reed explains that the use of circular knitting machines in the garment industry historically was limited to making tubular, knitted garments, such

[9] We are persuaded that "skirts" are "body garments." *See* Ex. 1003 ¶ 97.

Skechers EX1017
Skechers v Nike

as ladies stockings, sweaters, and other garments, wherein the entire knitted fabric was used as a unit to form one surface of a finished garment. Pet. 10–11 (citing Ex. 1006, 1:33–44; Ex. 1003 ¶ 94); *see supra* Section II.C.1. (note 6). Reed further teaches that "[c]omputer electronic knitting brought about the possibilities of making patterns and designs of up to three million stitches (previously approximately 50,000 was maximum). With this system, patterns and designs are possible that before could not be made." Ex. 1006, 1:50–55; *see* Ex. 1003 ¶ 95. Reed states that its method uses "an electronic circular double knitting machine" and that an "object of the [Reed] invention is to provide a method of reducing the cost of manufacturing of garments by using the versatility of a computerized electronic knitting machine." Ex. 1006, 1:58–59, 2:22–25, Figs 1–6; *see* Ex. 1003 ¶ 95. Further, Reed teaches that:

> If the present process is used to preform *an exterior decorative fabric having a lining or inner-lining or interfacing attached thereto*, the severed sections must be assembled and seamed by standard practices. By providing the lining or interfacing already attached to the section, a substantial amount of time is saved in measuring, marking and cutting the original fabric and lining or interlining as well as stitching them together.

Ex. 1006, 6:10–17 (emphasis added).

3. Nishida (Ex. 1009)

Nishida is directed to the production of a shoe upper by (1) cutting out a layout in the form of the shoe upper from a web of material and (2) shaping the shoe upper by connecting material parts of the layout by the formation of seams. *See* Ex. 1009, Abstract. By this process, such shoe

Skechers EX1017
Skechers v Nike

uppers may be produced efficiently and in reduced time despite the many individual parts present or to be made visible. *Id.*

Figure 2 of Nishida is reproduced below.

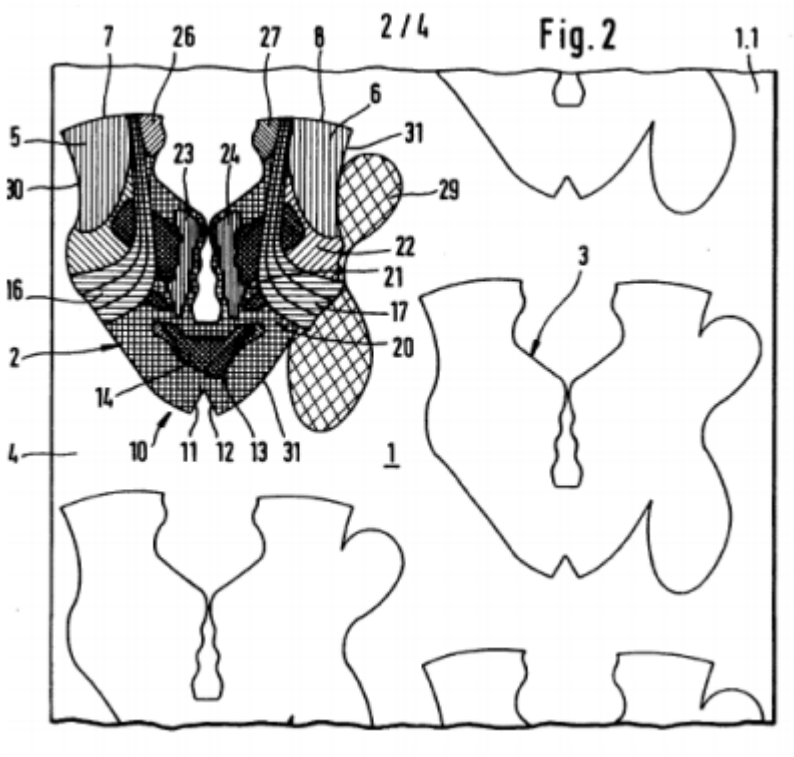

Figure 2 illustrates an embodiment of the upper layout according to Nishida. *Id.* at 3:6–12. Web of material 1 may include one or a plurality of layouts 2. Further, web of material 1 includes backing 4 that may be a knitted material, and different areas of layouts 2 may be formed by knitting different yarns or fibers on backing 4. *Id.* at 3:15–26, 5:63–6:2. Moreover, Nishida's web of material 1 may be "knitted in two or more layers or can be especially thick or additionally embroidered." *Id.* at 3:66–4:1.

Consequently, web of material 1 may be used to produce layouts 2 by different production measures, such as different styles, yarn material, color, material thickness, number of layers of material, or the like, simultaneously with the production of web of material 1. *Id.*; *see id.*, Figs. 1, 2. Each

Skechers EX1017
Skechers v Nike

layout 2, including a sole part, may be cut from web of material 1 as a unit and processed into an upper. *Id.* Nishida describes the manufacture of an article of footwear incorporating such an upper. *Id.* at 3:9–12, Fig. 3.

Figure 4 of Nishida is reproduced below.

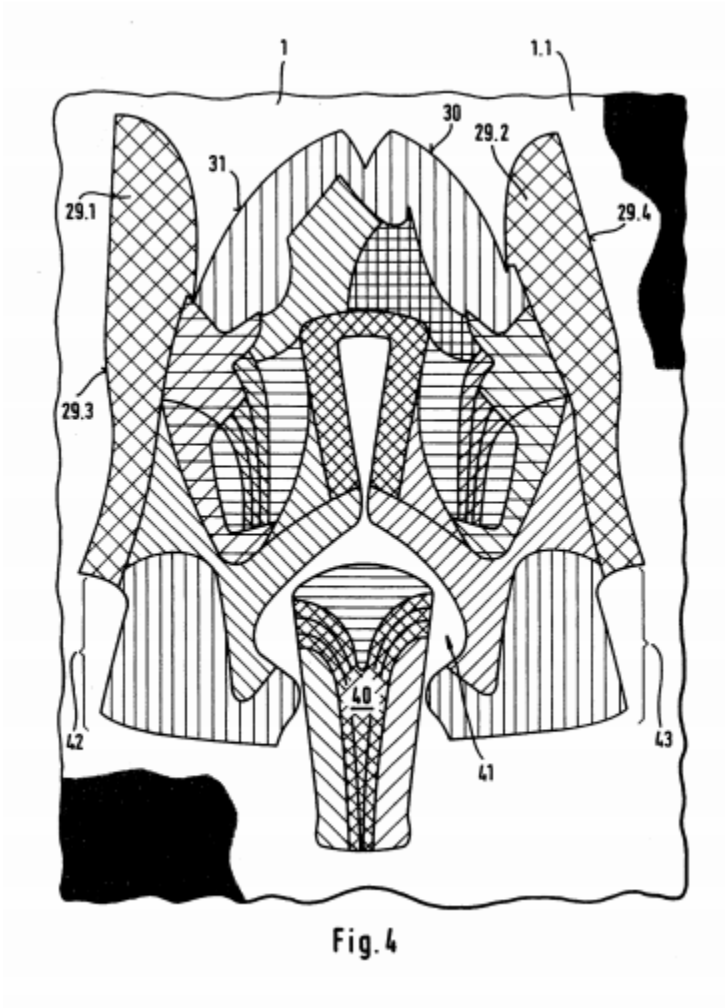

Figure 4 depicts a section of web of material 1 with radially symmetric layout 2 having sole part sections 29.1 and 29.2 provided on opposite sides of the upper, as well as tongue 40. *Id.* at 2:64–66. Nishida sets forth the following in association with Figure 4:

> [T]ongue 40, for example, according to FIG. 4, can be provided also in the course of producing the web of material 1 with different weave structures and/or weave patterns and/or

Skechers EX1017
Skechers v Nike

> embroideries or with one or with several prints or the like. On a web of material 1, different tongues 40 can be produced corresponding to a shoe shape and/or a shoe size both in shape, size, color or colors, patterns or the like. Preferably, in each case, related tongues 40 are produced simultaneously with a layout 2 on same web of material 1.
>
> For optimum surface use of web of material 1, a tongue 40 can be produced in the open space 41 located between the two layout sections 42 and 43, which later form the rear of foot or heel-pan shoe part.
>
> Preferably, each layout 2 has at least five, preferably more than ten, patterns and a tongue 40 has at least two, preferably at least three patterns produced or appearing, which are different from one another in each case.

Id. at 5:27–44; *cf. id.*, Fig. 2 (reproduced above, depicting web of material 1 including layouts 2 without tongues). Thus, as depicted in Figure 4, tongues may be individual parts of an article of footware "produced separately and applied to the upper later" and are of a relatively simply, substantially rectangular shape. *See* Ex. 1009, 1:50–53 (describing the inclusion of a tongue in a *conventional* article of footware). Tongues and uppers may be taken from the same web of material or from different webs. *See id.* at 5:37–40.[10]

4. Petitioner's Arguments

Petitioner argues that Reed and Nishida teach or suggest all of the limitations of claims 1–9, 11–19, and 21 of the '749 patent. Pet. 9–32. In particular, Petitioner argues that Reed and Nishida teach or suggest all of the

[10] Although we find that Nishida teaches layouts both of an upper and of a tongue, Petitioner does not argue that Nishida's tongue layouts separately teach textile elements that may be incorporated into an article of footwear. *See* Pet. 16, 28; Ex. 1003 ¶ 86, App'x C (pg. 140).

Skechers EX1017
Skechers v Nike

limitations of each of independent claims 1 and 13. *Id.* at 13–19 (claim 1), 20–21 (claim 13).

a. Independent Claims 1 and 13

Independent claim 1 recites "[a] method of manufacturing an article of footwear." Ex. 1001, 11:43; *see also id.* at 12:27 (claim 13). Reed teaches that its circular knitting methods may be used to manufacture "all types of garments." Ex. 1006, 5:56–57. Although Reed specifically identifies stockings and hosiery (*id.* at 1:33–35, 5:57–58), *e.g.*, footwear, as garments manufactured by circular knitting, Reed does not describe shoes expressly as "garments." Nishida also teaches that the webs of material depicted in its Figures 1 and 2 are "produced by a *conventional* textile process." Ex. 1009, 3:6–7 (emphasis added). Thus, we are persuaded that Petitioner has shown that Reed alone, as well as the combined teachings of Reed and Nishida, teach or suggest a method of manufacturing an article of footwear.

The method of claim 1 further comprises the step of "*simultaneously* knitting a textile element with a surrounding textile structure, the knitted textile element having at least one knitted texture that differs from a knitted texture in the surrounding knitted textile structure." Ex. 1001, 11:45–48 (emphasis added). Similarly, claim 13 recites:

> knitting a first textile element and a second textile element *simultaneously* with knitting a surrounding textile structure, the first knitted textile element located within a first portion of the knitted textile structure, the second knitted textile element located within a second portion of the knitted textile structure,
>
> varying at least one of the types of stitches or the types of yarns in the knitted textile structure to impart a texture to the first and second knitted textile elements different from a texture

Skechers EX1017
Skechers v Nike

> of the knitted textile structure extending between the first and second portions

Id. at 12:29–39 (emphasis added).

Reed teaches simultaneously knitting textile elements, including producing body garments, such as skirts (*see* Ex. 1006 Fig. 2), shirts and pants (*see id.* at Fig. 3), and dresses (*see id.* at Fig. 6), for men, women, and children (*id.* at 5:56–57) with a surrounding textile structure. Pet. 14–15. Reed further teaches simultaneously knitting textile elements, including sections of garments having "an exterior decorative fabric having a lining or inner-lining or interfacing attached thereto." Ex. 1006, 6:10–12. As noted above, Reed teaches that computerized knitting processes made possible numerous stitch varieties. *See id.* at 1:50–59; Ex. 1003 ¶ 95. Nishida also supplies this limitation. Pet. 14–15. Nishida's Figure 2, reproduced above (*see supra* Section II.C.3.) depicts textile elements, such as layouts 2, with a surrounding textile structure, such as web of material 1.

Pet. 15–16; *see* Ex. 1009, 3:15–26. Moreover, as noted above,

> *[T]ongue 40, for example, according to FIG. 4, can be provided also in the course of producing the web of material 1 with different weave structures and/or weave patterns and/or embroideries or with one or with several prints or the like. On a web of material 1, different tongues 40 can be produced corresponding to a shoe shape and/or a shoe size both in shape, size, color or colors, patterns or the like.* Preferably, in each case, related tongues 40 are produced simultaneously with a layout 2 on same web of material 1.
>
> . . .
>
> Preferably, each layout 2 has at least five, preferably more than ten, patterns and a tongue 40 has at least two, preferably at least three patterns produced or appearing, which are different from one another in each case.

Skechers EX1017
Skechers v Nike

Ex. 1009, 5:27–36, 41–44 (emphasis added). Thus, we determine that either Reed or Nishida teaches "simultaneously knitting a textile element with a surrounding textile structure" and "the first knitted textile element located within a first portion of the knitted textile structure," as recited in independent claims 1 and 13, respectively.

With regard to the second part of this limitation of claims 1 and 13, which Petitioner refers to as limitations 1C and 13C, Petitioner argues that:

> Reed describes using different types of stitches or yarns to impart a knitted texture to the textile element(s) that is different from a knitted texture in the surrounding textile structure. For example, Reed describes that the edges of the garments 16, 18, 20 are formed by interknitted stitches, whereas the remainder of the garments 16, 18, 20 are formed by non-interknitted stitches. . . . *Because the interknitted stitches are part of the garments 16, 18, 20, they form a texture in the garments that is different from the texture in the surrounding textile structure.*

Pet. 16 (emphasis added; citing Ex. 1006, 5:3–18; Ex. 1003 ¶¶ 108, 109); *see* Ex. 1006, 6:10–17 (describing the knitting of garment sections). Similarly, Petitioner argues that Nishida teaches that

> "*only just those parts of the web of material are produced in the necessary quality, thickness, multilayers or the like which correspond to the pattern or to an area of a pattern of the shoe upper or the related shoe part.* The remaining area of the web of material in contrast can consist of a simple, lightweight or inexpensive material quality, which holds together only the patterns or areas of such patterns in the web of material after their completion."

Pet. 17 (emphasis added; quoting Ex. 1009, 2:12–20; citing Ex. 1003 ¶¶ 110–111); *see* Ex.1009, 5:27–44 (describing the knitting of various tongues). We determine that either Reed or Nishida teaches this second part of the limitations of independent claims 1 and 13.

Skechers EX1017
Skechers v Nike

The method of claim 1 further comprises the step of "removing the knitted textile element from the surrounding knitted textile structure." Ex. 1001, 11:49–50; *see also id.* at 12:40–41 (claim 13 recites "removing the first and second knitted textile element from the knitted textile structure"). We are persuaded based on the evidence cited in the Petition that Petitioner has shown that the teachings of Reed or Nishida, alone or in combination, teach or suggest this limitation of the independent claims. Pet. 18 (claim 1; citing, *e.g.*, Ex. 1006, 3:12–19; Ex. 1009, 1:10–18); *id.* at 21 (claim 13); *see* Ex. 1003 ¶¶ 103–104.

Finally, the method of claim 1 comprises the step of "*incorporating* the knitted textile element *into* the article of footwear." Ex. 1001, 11:51–52 (emphases added); *see id.* at 12:42–43 (claim 13). Petitioner relies solely on Nishida to supply this limitation, and argues that Nishida teaches this limitation of the independent claims. Pet. 16 (claim 1), 20 (claim 13); *see* Ex. 1003 ¶ 126. We agree.

Petitioner argues that a person of ordinary skill in the art would have had reason to combine the identified teachings of Reed and Nishida to achieve the methods recited in independent claims 1 and 13. Pet. 11–13. In particular, Petitioner argues that, because Reed teaches that its methods are applicable to "*all* types of garments" (Ex. 1006, 5:56–57 (emphasis added); *see* Ex. 1003 ¶ 131), a person of ordinary skill in the art would have had reason to apply the teachings of Reed to the processes and shoe parts of Nishida. Pet. 12 (citing Ex. 1003 ¶ 133). Further, Petitioner argues that, because both Reed and Nishida teach the advantages of reducing cost through the use of computer-controlled knitting machines, a person of ordinary skill in the art would have had reason to combine their teachings.

Skechers EX1017
Skechers v Nike

Id. at 13 (citing Ex. 1003 ¶¶ 134–135). Finally, Petitioner argues that a person of ordinary skill in the art would have had reason to apply Reed's methods for producing textile elements, from which to produce garments, to produce Nishida's shoe upper layouts. *Id.*; *see KSR*, 550 U.S. at 417 ("[I]f a technique has been used to improve one device, and a person of ordinary skill in the art would recognize that it would improve similar devices in the same way, using the technique is obvious unless its actual application is beyond his or her skill.").

b. Dependent Claims 2–9, 11, 12, 14–19, and 21

With respect to the challenged dependent claims, Petitioner argues that Reed teaches or suggests the additional limitations recited in claims 9 and 19 (Pet. 29–31; *see supra* Section II.B.2.); that Nishida teaches or suggests the additional limitations recited in claims 7, 12, 17, and 18 (Pet. 25, 31–32); and that that Reed and/or Nishida teaches or suggests the additional limitations recited in claims 2–6, 8, 11, 14–16, and 21 (Pet. 19, 21–29, 31; *see supra* Section II.B.1.). Petitioner provides a detailed mapping of the limitations of each of these dependent claims onto the teachings of Reed and/or Nishida. *See* Ex. 1003, App'x A. Moreover, Petitioner argues that a person of ordinary skill in the relevant art would have had at least the same reason to combine the teachings of Reed and Nishida to achieve the methods recited in these dependent claims, as that given for combining the teachings of Reed and Nishida to achieve the recited methods of the independent claims. *See* Pet. 11–13.

Although we have reviewed the entirety of Petitioner's analysis and evidence for both the independent and dependent claims, we highlight the following specific evidence and arguments for emphasis. Claim 11 recites:

Skechers EX1017
Skechers v Nike

> The method of claim 1, wherein simultaneously knitting a textile element with a surrounding textile structure includes forming the knitted textile element *to include a first area and a second area with a unitary construction*, the first area being formed of a first stitch configuration, and the second area being formed of a second stitch configuration that is different from the first stitch configuration to impart varying textures to a surface of the knitted textile element.

Ex. 1001, 12:14–21 (emphasis added). Claim 21 depends from claim 13 and recites substantially the same limitations as claim 11. *Id.* at 13:5–14:5.

Petitioner argues that Reed teaches these limitations in two ways. Pet. 31. First, Petitioner argues that Reed teaches that the edges of the garments 16, 18, 20, depicted in Reed's Figure 1 (reproduced above) are formed by interknitted stitches and that the remainder of the garments 16, 18, 20 are formed by non-interknitted stitches. *Id.* at 25 (citing Ex. 1003 ¶¶ 115, 116 with respect to the limitations of claim 8). Specifically, the seams or outlines of the garments 16, 18, 20 are formed with interknitted stitches (shown in X's and O's in Reed's Figure 2), which are formed by feeds 1, 2, 3, and 4 on needles 7, 9, 8, and 10, as shown in Reed's Figures 3B and 3D. Ex. 1006, 5:3–18, Figs. 3A–3E; *see* Ex. 1003 ¶ 115. Reed further teaches that "two feeds[, *i.e.*, feeds 1, 3 for the dial needles] are used for one course of the inner tube 12 and two feeds[, *i.e.*, feeds 2, 4 for the cylinder needles] are used for the outer tube 14." Ex. 1006, 4:61–64, Figs. 2, 2A, 3A–3E; *see id.* at 5:67–6:3; Ex. 1003 ¶¶ 115, 116. Thus, because the stitches create a texture different from the remainder of the textile element, Petitioner concludes that Reed teaches "a first area and a second area with a unitary construction."

Second, Petitioner also argues that Reed teaches "how the two layers 12, 14 themselves may be formed of different yarns or stitch

Skechers EX1017
Skechers v Nike

configurations." Pet. 26 (citing Ex. 1003 ¶ 117). In particular, Reed describes the following:

> If the two tubes 12 and 14 are knitted of two different fibers, the knitted structure may form sections of a garment to be assembled in the regular manner. For example, the outside tube 14 may be a normal decorative fabric wherein the inner tube 12 may be formed of material such as lining. By simultaneously knitting and interknitting the two layers, a step is saved by producing a section of garment which is prelined. Similarly, the layer 12 (instead of being lining) may be interfacing, which is attached to the outside layer 14 and again saves a step in the manufacture of garments. Another example where two different fibers are used to make the inner and outer tubing would be in the foundation garment industry, where the inner fabric could be cotton or other soft fibers and the outer fabric would be lycra or elasticized yarns.

Ex. 1006, 3:61–4:8; *see* Pet. 26, 31; Ex. 1003 ¶ 117. Taking into account the above-noted description, Petitioner alternatively argues that Reed's separate circular knitted tubes may be the first and second areas recited in claims 11 and 21.

Finally, Petitioner alternatively argues that Nishida also teaches the limitation of "a first area and a second area with a unitary construction." Pet. 26–27, 31. In particular, Nishida teaches that "in the embodiment according to FIGS. 1 and 2, with layout 2 on the web of material 1, areas 26 and 27 are produced in a *configuration, color or style that is different from the other areas*." Ex. 1009, 4:6–9 (emphasis added); *see id.* at Abstract, 1:65–69, 2:40–45, 3:15–26, 3:47–48, 4:12–28, 4:48–55, 5:56–6:2; Ex. 1003 ¶¶ 118, 119. Nishida further states that:

> [l]ayout 2 is divided into different individual parts or areas, which differ from one another, such as by being of another material style and/or by being of different fibers or yarns, for

Skechers EX1017
Skechers v Nike

> example, from wool, wool with metal yarns, silk, silk with metal yarns, wool with plastic fibers or the like . . . .

Ex. 1009, 3:15–25; *see* Ex. 1003 ¶ 121. Petitioner argues that Nishida's teachings achieve a textile element with multiple knit constructions. Pet. 27. Specifically, these varying constructions of Nishida's layout may achieve varying elasticity, air permeability, absorptivity, softness, extensibility, wear resistance, and appearance, which Petitioner argues teach the "varying textures" recited in these claims. *Id.* (citing Ex. 1009, 3:43–52, 5:63–6:2, 6:1–31); *see* Ex. 1003 ¶¶ 120, 121. Thus, Petitioner argues that either Reed or Nishida teaches the above-noted limitation. Petitioner, however, does not specifically address the limitation's requirement that the knitted textile element is formed to include a first area and a second area "with a unitary construction" or how Reed and/or Nishida teaches "a unitary construction." *See* Pet. 31; *see also supra* Section II.B.1. (construing "a first area and a second area with a unitary construction" (Claims 11 and 21)).

Although we have highlighted specific evidence and arguments for emphasis, we have reviewed the entirety of Petitioner's analysis and evidence for independent claims 1 and 13, as well for dependent claims 2–9, 11, 12, 14–19, and 21, and the supporting testimony of Mr. Holden. As noted above, Petitioner relies on the same reasons to combine the teachings of Reed and Nishida for its challenges to each of claims 1–9, 11–19, and 21 of the '749 patent. *See* Pet. 11–13.

5. *Patent Owner's Contentions*

Patent Owner raises seven separate contentions why Petitioner fails to demonstrate that the combined teachings of Reed and Nishida render any of claims 1–9, 11–19, and 21 of the '749 patent unpatentable. *See* PO

Skechers EX1017
Skechers v Nike

Resp. 2–4. Because we find certain of the Patent Owner's contentions persuasive and dispositive, we do not address each of Patent Owner's separate contentions.

a. Low Level of Ordinary Skill in the Art

Patent Owner contends that Petitioner's assessment of the level of ordinary skill in the art is conclusory and is not based on the factors that the Board has considered in determining the level of ordinary skill in the art. *Id.* at 17–19. We have addressed the appropriate assessment of the level of ordinary skill in the art above. *See supra* Section II.A. Whether the level of ordinary skill in the art is "low" or "high" may make it more or less difficult for Petitioner to demonstrate obviousness. PO Resp. 19 ("In sum, the level of ordinary skill in the art at the time of the '749 patent was low. It is more difficult, therefore, for Petitioner to establish obviousness. . . ."); *see Kinetic Concepts, Inc. v. Smith & Nephew, Inc.*, 688 F.3d 1342, 1366 (Fed. Cir. 2012) ("Because it is generally easier to establish obviousness under a higher level of ordinary skill in the art, we must assume that, in light of the jury's verdict, it adopted the lower level of skill proposed by S & N." (citation omitted)). However, a "low" relative level of skill alone cannot *prevent* Petitioner from demonstrating obviousness.

Here, only Petitioner – the party bearing the burden of persuasion – has proposed an assessment of the level of ordinary skill in the art. *See supra* Section II.A.; *but see* IPR2013-00067, Ex. 2010 ¶ 52 (Patent Owner proposed that a "POSITA . . . would have a few years of experience with design and development of footwear and knowledge of textiles used in such footwear"). For the reasons set forth above, we have adopted Petitioner's assessment. Further, as noted above, Petitioner's declarant testifies from the

Skechers EX1017
Skechers v Nike

point of view of someone with the assessed level of skill, a level which the declarant exceeds. *See* Ex. 1003 ¶ 36; Ex. 1004. Thus, regardless whether the level of ordinary skill is deemed "low" or "high," we are not persuaded that the relative assessment of the level of ordinary skill in the art here affects our evaluation of Petitioner's arguments and evidence.

b. Weight Given to Declarant's Testimony

Patent Owner contends that Petitioner's declarant, Mr. Holden, did not author his declaration and, during cross-examination, Mr. Holden was unable to answer basic questions about the declaration, the patent at issue, the prior art, footwear, and knitting technologies. PO Resp. 19; *see* Ex. 2004, 12:2–18. Mr. Holden testified that "[he] worked with counsel one on one to basically give her a verbal description of my opinions and -- and my thoughts on the -- on these issues, and she did the actual typing of the document." Reply 3 (quoting Ex. 2004, 12:7–11); *see* Ex. 2004, 12:12–13:16. Declarants often have assistance in authoring their declarations. *See Square, Inc. v. Think Computer Corp.*, Case CBM2014-00159, slip op. at 26–27 (PTAB Nov. 27, 2015) (Paper 47) ("the mechanics of declaration preparation is 'a waste of time, both for the witness and the Board'"). Mr. Holden was not required to be the sole author of his declaration. Rather, the relevant issue regarding the preparation of Mr. Holden's declaration is whether Mr. Holden adopted the content of his declaration as his own. Here, he has. *See* Ex. 1003 ¶¶ 3, 4, 209.

As Patent Owner suggests, we weigh Mr. Holden's declaration testimony in light of his testimony on cross-examination. Although Mr. Holden indicated that he was unable to define or was unfamiliar with certain terms during cross-examination, he did name references, including

Skechers EX1017
Skechers v Nike

Spencer (Ex. 1010), that he could and would consult to obtain the answers to specific questions. Tr. 63:20–64:13. Moreover, Patent Owner's counsel acknowledged that persons of ordinary skill in the art (or declarants) do not have to have all of the knowledge relevant to their testimony in their heads and that they are allowed to consult references, as appropriate. *Id.* at 63:20–64:2. Although Patent Owner notes that Mr. Holden apparently was not aware of Spencer until this *inter partes* review (*see* Ex. 2004, 77:1–3; Tr. 64:1–6), his learning of and relying on a *new* reference alone is not sufficient reason to disregard, *i.e.*, give *no* weight to, Mr. Holden's testimony. Further, the issue here is not whether Mr. Holden is a person of ordinary skill in the art, but rather whether his testimony is of value to the panel. *See* Tr. 64:15–18. Thus, as indicated in the discussion below, we determine the appropriate weight to give to Mr. Holden's testimony.

c. Failure to Explain How and Why a Person of Ordinary Skill in the Art Would Have Combined the Teachings of Reed and Nishida to Achieve the Recited Methods

Initially, Patent Owner contends that Petitioner fails to address the full scope and content of the prior art and ignores critical disclosure of both references. PO Resp. 24. In particular, Patent Owner notes that "Reed states that his 'present invention relates generally to knitted garments and more particularly to a garment which is preseamed and preformed on a circular knitting machine.'" *Id.* (quoting Ex. 1006, 1:8–11 (emphasis omitted)); *see* Tr. 36:3–9. Patent Owner contends that this description of Reed's "present invention" limits the scope of Reed to *preseamed* garments made on circular knitting machines. PO Resp. 24–25. Although this description may limit the scope of Reed's recited methods, the scope of Reed's teachings is broader than what Reed specifically refers to as the "present invention"

Skechers EX1017
Skechers v Nike

(Ex. 1006, 1:8–11) and encompasses "the conventional methods involv[ing] superimposing two preexisting panels of material, forming a garment into those preexisting panels, cutting the shaped garment from the two preexisting panels, and then seaming the two cutouts together to create the final garment" (PO Resp. 25 (citing Ex. 1006, 6:18–22)). *See* Reply 7 (quoting *In re Heck*, 699 F.2d 1331, 1332–33 (Fed. Cir. 1983) ("The use of patents as references is not limited to what the patentees describe as their own inventions or to the problems with which they are concerned. They are part of the literature of the art, relevant for all they contain." (citation omitted))). Although Reed's teachings may be broader than preseamed garments and sections garments, Petitioner relies only on the embodiments of Reed's invention that are directed to preseamed garments *and* to preseamed sections of garments. Pet. 14 (citing Ex. 1006, 1:58–64); Reply 6–8; *see* Tr. 9:17–10:7, 16:17–17:8, 25:17–26:21, 30:4–11.

With respect to Nishida, Patent Owner contends that Nishida's web of material has two primary components: a backing and one or more layouts printed on or produced in the backing. PO Resp. 28–29 (citing Ex. 1009, 1:40–2:53, 3:6–26). The backing may be formed prior to the production of the layouts. *Id.* Patent Owner notes that Nishida seeks to improve on previously known methods for producing layouts, such as those described in German Patent No. 627 878. *Id.* at 28. Nevertheless, the reference to the German patent is exemplary, and we do not interpret Nishida as limited to the methods described in the German Patent. *See* Ex. 1009, 1:39–46 ("to further develop this previously known process"); Reply 8.

After the backing is formed, Nishida teaches printing on or producing layouts in the backing. Ex. 1009, 3:13–15. The layouts are printed by a

Skechers EX1017
Skechers v Nike

fabric printing process *onto* the backing or produced by a textile production process *inside* the backing. PO Resp. 29 (citing Ex. 1009, 1:50–56, 2:20–26, 3:13–15, 5:45–52); *see* Reply 9. "[T]he material can be woven or knitted in two or more layers or can be especially thick or additionally embroidered." Ex. 1009, 3:66–4:1.

As noted above, each of the embodiments of Reed, relied upon by Petitioner, describes the pre-seaming of garments or sections of garments *before* their removal from the cylindrical textile structure. The teachings of Nishida relied upon by Petitioner, do not teach pre-seaming and, instead, teach the seaming of the upper layout *after* its removal from the web of material. Ex. 1009, 4:19–30 (Figs. 2 and 3), 5:3–26 (Figs. 4 and 5); *see* Pet. 24; PO Resp. 31; Tr. 45:2–46:8. Patent Owner contends that Petitioner fails to explain why and how a person of ordinary skill in the art would combine the teachings of Reed and Nishida to achieve the recited methods of the challenged claims. PO Resp. 36–41. In particular, because Petitioner relies on the teachings of the embodiments of Reed which describe pre-seamed garments and pre-seamed sections of garments and because Nishida does not teach pre-seaming, Patent Owner contends that Petitioner has not shown why and how a person of ordinary skill in the art would combine the teachings of Reed and Nishida to achieve the recited methods of the challenged claims. For the following reasons, we agree.

i. Failure of Proof

Petitioner bears the burden of proving by a preponderance of the evidence that the challenged claims are unpatentable. This includes demonstrating by a preponderance of the evidence that a person of ordinary skill in the art would have had reason to combine the teachings of Reed and

Skechers EX1017
Skechers v Nike

Nishida to achieve the methods recited in the challenged claims. As noted above, Petitioner argues that a person of ordinary skill in the art would have had at least three reasons to combine the teachings of Reed and Nishida to achieve the methods recited in the challenged claims. Pet. 11–13; *see* Tr. 10:12–11:12. First, Petitioner argues that, because Reed teaches that its methods are applicable to "*all* types of garments" (Ex. 1006, 5:56–57 (emphasis added); *see* Ex. 1003 ¶ 131), a person of ordinary skill in the art would have had reason to apply the teachings of Reed to the processes and shoe parts of Nishida. Pet. 12 (citing Ex. 1003 ¶ 133). Second, Petitioner argues that, because both Reed and Nishida teach the advantages of reducing cost through the use of computer-controlled knitting machines, a person of ordinary skill in the art would have had reason to combine their teachings. *Id.* at 13 (citing Ex. 1003 ¶¶ 134–135). Third, Petitioner argues that a person of ordinary skill in the art would have had reason to apply Reed's methods for producing textile elements, from which to produce garments, to produce Nishida's shoe upper patterns. *Id.*; *see KSR*, 550 U.S. at 417. However, none of these reasons or any other reason identified by Petitioner addresses the differences between Reed and Nishida, specifically pre-seaming.

Independent claims 1 and 13 do not mention seaming or pre-seaming expressly. *See* Ex. 1001, 11:43–52 (claim 1), 12:27–43 (claim 13). Further, Patent Owner acknowledged that at least independent claims 1 and 13 do not mention seaming or pre-seaming. Tr. 37:7–10. Claims 2–9, 11, 12, 14–19, and 21 also do not mention seaming or pre-seaming expressly. *See* Ex. 1001, 11:51–57, 12:7–20, 12:29–32, 12:41–48. As we noted above, however, claims 11 and 21 recite "a unitary construction," which "is intended to express a configuration *wherein portions of a textile element are*

Skechers EX1017
Skechers v Nike

not joined together by seams or other connections." *Id.* at 6:42–46. Thus, we interpret the limitations of claims 11 and 21 to recite a textile element having areas of different textures, but without seams. *See supra* Section II.B.1. Moreover, under principles of claim differentiation, we further are persuaded that the scope of challenged claims 1–9 and 12–19 is broad enough to encompass methods related to both pre-seamed and unseamed garments and garment sections. Nothing in the Specification (Ex. 1001) or in the prosecution history (Ex. 1002) of the '749 patent overcomes the presumptive scope of the independent claims arising from the doctrine of claim differentiation. *See Kraft Foods, Inc. v. Int'l Trading Co.*, 203 F.3d 1362, 1368 (Fed. Cir. 2000).

Neither Petitioner nor its declarant, Mr. Holden addresses the fact that each of the relied upon embodiments of Reed teaches pre-seaming and that none of the relied upon teachings of Nishida involves pre-seaming. PO Resp. 36–41; *see* Tr. 34:17–35:12; *see also* Ex. 2004, 161:5–163:19 (Mr. Holden was unable to identify teachings in Nishida directed to pre-seamed and preformed uppers). Moreover, during cross-examination, Mr. Holden acknowledged that he had not been asked to nor had he considered how the teachings of these references could be combined. In particular, the following colloquy occurred during Mr. Holden's deposition:

> Q. (By Mr. Harris) And isn't it also true that nowhere in your declaration do you describe how a person of ordinary skill in the art would create a preseamed and preformed footwear upper on a circular knitting machine?
>
> MS. WILLIAMS: Objection.
>
> THE WITNESS: I don't recall that there's any por- -- portion of that. Again, I was not asked to hypothesize on that particular point.

Skechers EX1017
Skechers v Nike

> Q. (By Mr. Harris) Okay. Just so I'm clear, you weren't asked to offer an opinion on how a person of ordinary skill in the art would create a preseamed and preformed footwear upper on a circular knitting machine; correct?
>
> A. I don't recall that I was asked that particular question.
>
> Q. Thank you.

Ex. 2004, 152:22–153:13; *see* Tr. 53:19–57:5.

In *ActiveVideo Networks, Inc. v. Verizon Communications, Inc.*, our reviewing court found that where "[t]he expert failed to explain how specific references could be combined, which combination(s) of elements in specific references would yield a predictable result, or how any specific combination would operate or read on the asserted claims," such testimony "is not sufficient and is fraught with hindsight bias." 694 F.3d 1312, 1327 (Fed. Cir. 2012); *see* PO Resp. 58–60; Reply 27; *see also Hyundai Motor Co. v. Blitzsafe Texas, LLC*, Case IPR2016-01476, slip op. at 32 (PTAB Jan. 24, 2017) (Paper 12) ("A determination of obviousness cannot be reached where the record lacks 'explanation as to *how* or *why* the references would be combined to produce the claimed invention.'"; quoting *Trivascular, Inc. v. Samuels*, 812 F.3d 1056, 1066 (Fed. Cir. 2016)). Despite Mr. Holden's testimony that a person of ordinary skill in the art would have had reason to combine the teachings of Reed and Nishida to achieve the recited methods of the challenged claims (*see* Ex. 1003 ¶¶ 131–137), Mr. Holden's testimony during cross-examination makes clear that he did not perform the necessary analysis to support his conclusions. *See* 37 C.F.R. § 42.65(a).

Petitioner's evidence, and, in particular, Mr. Holden's testimony, is deficient with respect to the limitations recited in claims 11 and 21, in that it fails to offer any explanation why a person of ordinary skill in the art would

Skechers EX1017
Skechers v Nike

combine the teachings of Reed and Nishida to achieve a method in which seams of the kind taught by Reed apparently are prohibited. Petitioner argues that Reed teaches the "a unitary construction" limitation of claims 11 and 21 either because the interconnecting stitches are a different texture from the rest of the garment or garment section or because the inner and outer circular knit materials may have different textures. Pet. 25–29, 31. Thus, Mr. Holden testifies in support that Reed's interknitted stitches, i.e., the joining seams, teach textures different from the remainder of Reed's finished garments or garment sections (Ex. 1003 ¶¶ 114–116) or that circular knit materials, although joined by seams, may have different textures (*id.* ¶ 117). These arguments and testimony seem inconsistent with Petitioner's position that *either* the finished garments *or* garment sections are the "textile element" recited in the challenged claims and that, in claims 11 and 21,

> the knitted textile element [is formed] to include a first area and a second area *with a unitary construction*, the first area being formed of a first stitch configuration, and the second area being formed of a second stitch configuration that is different from the first stitch configuration to impart varying textures to a surface of the knitted textile element.

Pet. 19–20, 25–29, 31 (emphasis added); *see* Tr. 16:17–17:12. These apparent inconsistencies are not explained.

Alternatively, Petitioner argues (Pet. 26–29, 31) and Mr. Holden testifies (Ex. 1003 ¶¶ 118–121) that the limitations of claims 11 and 21 are taught by Nishida. In particular, Mr. Holden testifies that Nishida describes that, "in the embodiment according to FIGS. 1 and 2, with layout 2 on the web of material 1, ***areas 26 and 27 are produced in a configuration***, color or style ***that is different from the other areas***." *Id.* ¶ 118 (quoting Ex. 1009, 4:6–9 (emphasis added by declarant)). Mr. Holden concludes from his

Skechers EX1017
Skechers v Nike

analysis of Nishida that "[a] person of ordinary skill in the art at least as of March 3, 2004 would have understood that Nishida's disclosure regarding varying the knit of individual areas would include having a substantially smooth texture in one area, and a rougher texture in another area." *Id.* ¶ 121. What Mr. Holden fails to explain, however, is how and why this teaching of Nishida is combined with the teachings of the relied upon embodiments of Reed to achieve the methods recited in claims 11 and 21. Petitioner and its declarant rely instead on the *general* arguments presented in connection with independent claims 1 and 13 regarding reasons to combine the teachings of Reed and Nishida. Pet. 11–13; Ex. 1003 ¶¶ 131–137. Given the language of the claims, our interpretation of that language, and the teachings of Reed and Nishida, we find Petitioner's arguments and evidence, especially Mr. Holden's testimony, insufficient and unpersuasive.

Consequently, having weighed Petitioner's evidence of reasons to combine the teachings of Reed and Nishida, noting the deficiencies in Mr. Holden's analysis in support of those reasons, we are not persuaded that Petitioner has demonstrated by a preponderance of the evidence that a person of ordinary skill in art would have had reason to combine the teachings of Reed and Nishida to achieve the methods recited in the challenged claims.

ii. Combined Teachings of Reed and Nishida Render Reed Inoperable for its Intended Purpose

As our reviewing court has explained,

> "obviousness is a question of law based on several underlying factual findings," including what a reference teaches, and whether proposed modifications would change a reference's "principle of operation." Where "a patent claims a structure already known in the prior art that is altered by the mere

Skechers EX1017
Skechers v Nike

> substitution of one element for another known in the field, the combination must do more than yield predictable results." { "pageset": "S74 *However, combinations that change the "basic principles under which the [prior art] as designed to operate,"* *or that render the prior art "inoperable for its intended purpose," may fail to support a conclusion of obviousness.*

Plas-Pak Industries, Inc. v. Sulzer Mixpac AG, 600 F. App'x 755, 757–758 (Fed. Cir. 2015) (citations omitted, emphasis added).

As noted above, we find that the fundamental purpose of Reed's methods is to produce pre-seamed, finished garments or sections of garments. *E.g.*, Ex. 1006, 1:58–64, 3:8–21, 5:67–6:17; *see supra* Section II.C.2. As Reed explains, "[t]he essence of the present invention is a garment formed of juxtaposed sections of simultaneously knitted, *concentric* tubes *interconnected* by knitting." Ex. 1006, 6:25–28 (emphases added). As we also note above, the methods recited in challenged claims 1–9 and 12–19 do not specify whether or not the textile elements are pre-seamed. Thus, we interpret those claims broadly to cover both pre-seamed and unseamed textile elements.

As discussed above, however, claims 11 and 21 are interpreted to describe "a unitary construction," which does not include seams. *See supra* Section II.B.1. Thus, "a unitary construction" does not appear to read on Reed's pre-seamed, finished garment or garment section. Further, Petitioner does not argue that, like Reed, Nishida teaches pre-seamed uppers or sections of uppers or tongues. Consequently, we determine that, relying on Nishida's teachings to supply the "unitary construction" limitation with respect to claims 11 and 21 in the context of the teachings of Reed, as Petitioner suggests (Pet. 26–29, 31), would require the alteration of the

Skechers EX1017
Skechers v Nike

principles of operation of Reed or would render Reed inoperable for its intended purpose.

In response to Patent Owner's contention that Petitioner's combination of the teachings of Reed and Nishida renders Reed inoperable for its intended purpose, Petitioner argues that a person of ordinary skill in the art would understand that

> [t]o produce two single-layer layouts, the POSITA would simply cut along the garment side of stitches 22, 24 (highlighted in red below) so that all seams remain with the surrounding tube material, and the two layouts are no longer connected to each other after removal from the tubes 12, 14.

Reply 18–19 (citing Ex. 1006, 3:9–15, 5:67–6:3; Ex. 1003 ¶¶ 103, 112). In particular, Petitioner produces the following annotated version of Reed's Figure 1.

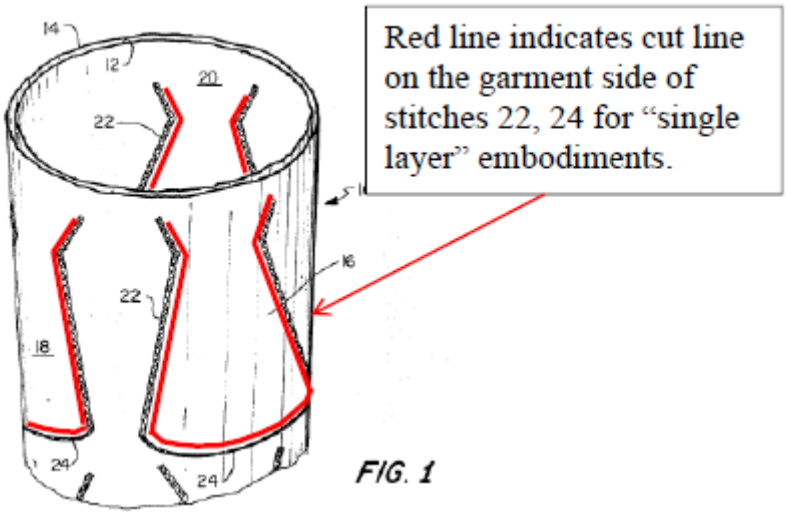

Reply 19. Petitioner has annotated Reed's Figure 1 to add red lines indicating cut lines *on* the garment *inside* of stitches 22, 24. As depicted in annotated Figure 1, Petitioner argues that the finished garments or garment sections could be cut from the textile structure inside of the seams, as indicated by the red lines. *Id.* According to Petitioner, "[t]he two separated

Skechers EX1017
Skechers v Nike

layouts are then processed *and seamed* along the edges, as described in both Reed and Nishida." *Id.* (emphasis added). Nevertheless, Petitioner provides no explanation of why a person of ordinary skill in the art would have reason to seam the garments or garment sections, only then to remove the seams, so that the garments or garment sections could be reseamed later. *Id.* at 18–19; *see* Tr. 59:21–60:12, 68:20–70:21.[11] We find these arguments contrary to the teachings of Reed and unpersuasive.

Consequently, with respect to challenged claims 11 and 21, we find that Petitioner's proposed combination of the teachings of Reed and Nishida would render Reed either inoperable or unsuitable for its intended purpose. Thus, we are not persuaded that Petitioner has demonstrated by a preponderance of the evidence that a person of ordinary skill in art would have had reason to combine the teachings of Reed and Nishida to achieve the methods recited in challenged claims 11 and 21.

6. Summary

Based on our review of the arguments and evidence presented by each party, we conclude that Petitioner fails to demonstrate by a preponderance of the evidence that either of independent claims 1 and 13 is unpatentable as rendered obvious by the combined teachings of Reed and Nishida.

---

[11] Petitioner's counsel argue that Reed's seams may be used as an outline, but we do not find that Reed teaches that cuts are taught inside the outline to remove the seam from the garment section. Ex. 1006, 3:9–12 (*Interconnected* knitted stitches form *both* an outline and a seam joining the inner and outer tubes.); *see* Tr. 70:2–21. Cutting inside the seams of a finished garment would change a *finished* garment into an *unfinished* garment or a *seamed* garment section into an *unseamed* garment section and would appear entirely contrary to the teachings of Reed. *See* Ex. 1006, 3:15–21.

Skechers EX1017
Skechers v Nike

Moreover, at least because Petitioner's arguments for the obviousness of dependent claims 2–9, 11, 12, 14–19, and 21 over Reed and Nishida rely on the arguments and evidence presented with respect to independent claims 1 and 13, we also conclude that Petitioner fails to demonstrate by a preponderance of the evidence that any of the dependent claims is unpatentable as rendered obvious by the combined teachings of Reed and Nishida. We further determine that for the additional reasons set forth above, Petitioner fails to demonstrate by a preponderance of the evidence that claims 11 and 21 are rendered obvious by the combined teachings of Reed and Nishida.[12]

III. SUMMARY

We are not persuaded that Petitioner demonstrates by a preponderance of the evidence that any of claims 1–9, 11–19, and 21 of the '749 patent is rendered obvious over the combined teachings of Reed and Nishida.

IV. ORDER

It is, therefore,

ORDERED that, pursuant to 35 U.S.C. § 318(a), Petitioner fails to demonstrate by a preponderance of the evidence that any of claims 1–9, 11–19, and 21 is unpatentable as rendered obvious over the combined teachings of Reed and Nishida; and

FURTHER ORDERED that, because this is a Final Written Decision, parties to the proceeding seeking judicial review of the decision must comply with the notice and service requirements of 37 C.F.R. § 90.2.

---

[12] Patent Owner also contends that Reed teaches away from its combination with Nishida (PO Resp. 46–48; *but see* Reply 19–20), in view of our determinations above, we need not reach this contention.

Skechers EX1017
Skechers v Nike

Trials@uspto.gov
571-272-7822

Paper 21
Entered: October 19, 2017

UNITED STATES PATENT AND TRADEMARK OFFICE

BEFORE THE PATENT TRIAL AND APPEAL BOARD

adidas AG,
Petitioner,

v.

NIKE, Inc.,
Patent Owner.

Case IPR2016-00922
Patent 8,266,749 B2

Before JOSIAH C. COCKS, MICHAEL J. FITZPATRICK, and JAMES B. ARPIN, *Administrative Patent Judges.*

FITZPATRICK, *Administrative Patent Judge*, concurring.

I concur with the majority's decision that Petitioner did not meet its burden under 35 U.S.C. § 318(a) to prove by a preponderance of the evidence that the challenged claims are unpatentable. I would reach that decision, however, merely for the reasons set forth below.

Reed did not invent circular knitting. Reed notes that "[c]ircular knitting machines have been used to make tubular, knitted garments, such as ladies' stockings, sweaters and other garments." Ex. 1006, 1:33–35. Reed explained further that "[i]n these tubular garments, the user's anatomy is in the center of the single tube." *Id*. at 1:35–37. Reed further explained that circular double knitting, in which two tubes or layers are simultaneously knitted, was also known in the prior art. *Id*. at 1:37–39 ("'Two tube,' 'double layer,' 'Bi-knit' and 'duo-fold' fabrics have been produced on circular knitting machines."). As with circular knit single-tube garments, the tubes of circular knit double-tube garments surrounded the anatomy of the user. *Id*. at 1:39–44.

What Reed invented was circular double knitting of garments in which "the anatomy of the user would fit between the single knitted fabrics instead of in the center of the tubes." *Id*. at 1:67–2:1. Figure 1 of Reed is reproduced below.

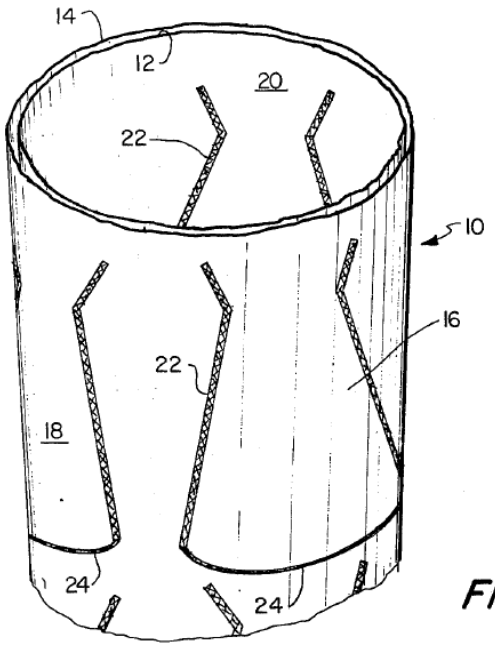

FIG. 1

Skechers EX1017
Skechers v Nike

Figure 1 of Reed, reproduced above, shows a doubled-layered tube of knitted structure 10 as it would come off a circular knitting machine in accordance with a preferred embodiment of Reed. *Id*. at 2:66–3:3. "[T]ubes 12 and 14 are simultaneously knitted concentrically on a circular double knit machine." *Id*. at 3:3–5. The tubes are stitched together along interconnecting knitting 22, thereby forming the outline of three skirts 16, 18, and 20 that are subsequently cut out from the knitted structure.[13] *Id*. at 3:8–21. Reed explains:

> [T]he knitted structure 10 includes (around its circumference) a plurality of finished garments [i.e., three skirts] which need only be severed from the structure 10 and turned inside out if a hidden seam is desired. Only a minimum amount of additional sewing is required to form hems and attach various decorative ornaments to complete a finished garment.

Id. at 3:15–21. Reed states that its invention "produce[s] a preformed and preseamed fabric on a circular knitting machine so as to reduce time, cost and labor involved in making garments." *Id*. at 6:20–22.

As stated in the majority opinion, Nishida is directed to the production of a shoe upper by (1) cutting out a layout in the form of the shoe upper from a web of material and (2) shaping the shoe upper by connecting material parts of the layout by the formation of seams. *See* Ex. 1009, Abstract; *see also id.* at Fig. 2 (illustrating layout of shoe upper on web of material).

Petitioner argues the following:

> Reed's explicit statement that "[t]he present invention may be used to form all types of garments worn by men, women and children" (Ex. 1006, 5:56–57) in combination with

[13] The tubes also are stitched together along interconnecting knitting 24, but that "is merely to define the lower outline of the skirt upon which the pattern may be cut." Ex. 1006, 3:12–15.

Skechers EX1017
Skechers v Nike

> Reed's explicit reference to the fact that footwear items, such as stockings, were conventionally knit with circular knitting machines (Ex. 1006, 1:33–44), would have suggested to a person of ordinary skill in the relevant art at least as of March 3, 2004, that Reed's process could be used to form all types of articles of clothing including footwear, particularly since "clothing" is understood to refer to all things that people wear to cover their bodies. (Ex. 1003, ¶131.) Specifically, the skilled person would have understood Reed's reference to "all types of garments" to include tops, pants, shorts, skirts, dresses, suits, outerwear, underwear, footwear, headwear, nightwear, swimwear, and accessories (such as headbands, scarves, bandanas, handkerchiefs, neckties, gloves, cummerbunds, etc.). (Ex. 1003, ¶131.)
>
> With this understanding, the skilled person would have been motivated to use Reed's process to produce textile elements for all types of clothing, including forming textile elements to be incorporated into footwear as described in Nishida. (Ex. 1003, ¶132.)
>
> The skilled person would have found Nishida's process of manufacturing textile elements to be analogous art to Reed's process, as both are directed to methods of simultaneously forming textile elements within a surrounding textile structure using programmable and/or computerized single needle selection technology, removing the textile elements, and incorporating the textile elements into a wearable item. (Ex. 1003, ¶133.)

Pet. 11–12.

Petitioner's reasons to combine the prior art teachings are not persuasive. It is true that Reed states that its invention "may be used to form all types of garments" (Ex. 1006, 5:56–57), but that does not mean Reed provides a reason to use it in forming any specific type of garment, let alone part of a shoe. Petitioner attempts to provide such a reason by relying, not on a stated purpose of Reed's invention (which is what Petitioner asserts in

Skechers EX1017
Skechers v Nike

its obviousness challenge), but rather on what circular knitting machines traditionally had been used for prior to Reed's invention. *See* Pet. 12. More specifically, Petitioner relies on Reed's statement that, prior to Reed, circular knitting machines were used "to make tubular, knitted garments, such as ladies' *stockings*, sweaters and other garments." Ex. 1006, 1:33–35 (emphasis added); *see also* Pet. 12 (referring to "stockings" and citing Ex. 1006, 1:33–44). Petitioner extrapolates Reed's reference to "stockings" to footwear and then further to an upper of a shoe. However, there is an evidentiary gap jumping from "stockings" to footwear and an additional evidentiary gap subsequently jumping from footwear generally to a shoe's upper specifically. The cited testimony of Petitioner's declarant does not fill those gaps. It is merely repetitive of the arguments block-quoted above. *Compare* Pet. 11–12, *with* Ex. 1003 ¶¶ 131–33.

Nor could I fill those gaps if I wanted. To summarize, Reed (1) acknowledges that circular knitting of tubular garments in which the anatomy is placed inside a resulting tube of knitted structure was known prior to Reed; and (2) describes its invention of double circular knitting garments in which the anatomy is placed between layers of the resulting tube. *See, e.g.*, Ex. 1006, 3:25–31. Nishida's upper (*see, e.g.*, Ex. 1009, Fig. 2) is neither a "tubular garment" that could be made using a pre-Reed circular knitting method (*see* Ex. 1006, 1:33–37) nor a garment that could be "produce[d as] a preformed and preseamed fabric on a circular knitting machine" using Reed's invented circular knitting method (*see id*. at 6:20–22).

Skechers EX1017
Skechers v Nike

For these reasons, I concur with the majority's decision that Petitioner did not meet its burden under 35 U.S.C. § 318(a) to prove by a preponderance of the evidence that the challenged claims are unpatentable.

Skechers EX1017
Skechers v Nike

PETITIONER:

Mitchell G. Stockwell
Vaibhav P. Kadaba
Tiffany L. Williams
KILPATRICK TOWNSEND & STOCKTON LLP
mstockwell@kilpatricktownsend.com
wkadaba@kilpatricktownsend.com
tiwilliams@kilpatricktownsend.com

PATENT OWNER:

Christopher J. Renk
Michael J. Harris
BANNER & WITCOFF, LTD
crenk@bannerwitcoff.com
mharris@bannerwitcoff.com
bwlitdocket@bannerwitcoff.com

Skechers EX1017
Skechers v Nike