KNITTING TECHNOLOGY

A comprehensive handbook and practical guide

Third edition

David J Spencer

TECHNOMIC PUBLISHING CO., INC.
LANCASTER • BASEL

WOODHEAD PUBLISHING LIMITED
Cambridge England

Skechers EX1050
Skechers v Nike

Published by Woodhead Publishing Limited, Abington Hall, Abington
Cambridge CB1 6AH, England
www.woodhead-publishing.com

Published in North and South America by
Technomic Publishing Company Inc
851 New Holland Avenue, Box 3535
Lancaster, Pennsylvania 17604 USA

First published 1983, Pergamon Press
Reprinted with corrections 1985 and 1986
Second edition 1989
Reprinted 1991, 1993
Reprinted by Woodhead Publishing Limited, 1996, 1998
Third edition 2001, Woodhead Publishing Limited and Technomic Publishing Company Inc

© 1989, 2001, David J Spencer
The author has asserted his moral rights

This book contains information obtained from authentic and highly regarded sources. Reprinted material is quoted with permission, and sources are indicated. Reasonable efforts have been made to publish reliable data and information, but the author and the publishers cannot assume responsibility for the validity of all materials. Neither the author nor the publishers, nor anyone else associated with this publication, shall be liable for any loss, damage or liability directly or indirectly caused or alleged to be caused by this book.

Neither this book nor any part may be reproduced or transmitted in any form or by any means, electronic or mechanical, including photocopying, microfilming and recording, or by any information storage or retrieval system, without permission in writing from the publishers.

The consent of Woodhead Publishing Ltd and Technomic Publishing Company Inc does not extend to copying for general distribution, for promotion, for creating new works, or for resale. Specific permission must be obtained in writing from Woodhead Publishing Ltd or Technomic Publishing Company Inc for such copying.

Trademark notice: Product or corporate names may be trademarks or registered trademarks, and are used only for identification and explanation, without intent to infringe.

British Library Cataloguing in Publication Data
A catalogue record for this book is available from the British Library.

Library of Congress Cataloging in Publication Data
A catalog record for this book is available from the Library of Congress.

Woodhead Publishing ISBN 1 85573 333 1
Technomic Publishing Company ISBN 1-58716-121-4

Cover design by The ColourStudio
Typeset by Best-set Typesetter Ltd., Hong Kong
Printed by T J International, Cornwall, England

Skechers EX1050
Skechers v Nike

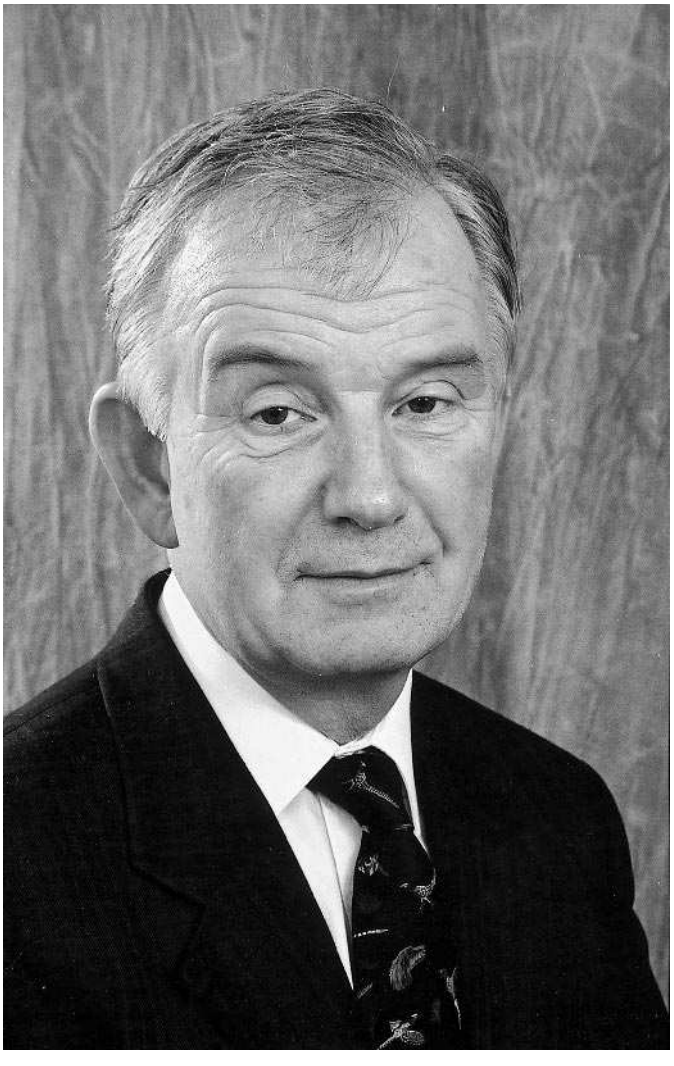

The author, David J Spencer, C Text, FTI, ACFI, recently retired as a senior lecturer in Textile and Knitting Technology at De Montfort University, Leicester. He has been an examiner and moderator in the Manufacture of Hosiery and Knitted Goods for the City and Guilds of London Institute. He has written numerous technical articles and is Technical Editor of the journal *Knitting International* and is Contributing Editor of *ATA Journal* and *China Textile Journal*. He is Chairman of The Textile Institute Knitting Terms and Definitions Committee. He obtained his initial industrial experience with Corah of Leicester, who were then world leaders in the application of knitting technology. [*Photo by Oakham Photographic*.]

Skechers EX1050
Skechers v Nike

To my wife,
SHIRLEY ANN

Skechers EX1050
Skechers v Nike

Preface

The aim of this book is to combine in a single volume the fundamental principles of weft and warp knitting in such a manner that its contents are useful to readers in education, industry or commerce. It thus fulfils the long felt need for a comprehensive up-to-date textbook explaining this important sector of textile technology. Aspects covered include flat, circular, full fashioned, hosiery, Raschel, tricot and crochet production. The inclusion of the historical development of the types of machines, their actions and mechanisms as well as the construction, properties and end used of the products which they manufacture, make the book acceptable as a set text for Textile courses from technician to degree and Textile Institute examination level. It will also prove particularly suitable for professionals wishing to update or broaden their understanding of knitting.

The contents have been arranged for the convenient use of different levels of readership with the text gradually progressing from an explanation of basic terminology and principles to eventually encompass the most advanced aspects of the technology including the application of microprocessor controls and developments in knitting science. Care has been taken where possible to emphasise fundamental rules and principles which are less likely to be drastically altered by developments in later technology.

The indexed and referenced format of the text is supplemented by labelled diagrams and photographs so that the book may also serve as a handy reference work for study and business purposes. Terminology is defined either according to Textile Institute terms and definitions or current usage in the industry and is supplemented as necessary by American or continental terminology. Internationally accepted methods of notation help to clarify explanations of fabric structures. Although SI units and the tex yarn count system have been explained and used in the text, other systems of measurement and yarn count systems have also been employed wherever it has been considered that their usage is still of importance. A number of worked calculations have been included in certain chapters to further clarify explanations and assist students.

It is hoped that the inclusion of a number of fashion photographs will encourage

Skechers EX1050
Skechers v Nike

design and sales personnel to come to terms with technology whilst emphasizing the importance of end-product design to technologists.

This edition includes developments in electronic control and selection in warp and weft knitting. Basic software programming is covered with particular reference to shaping and integral knitting of complete garments. New information regarding the historical development of knitting techniques has also been included.

An additional chapter has been added to cover the rapidly expanding sector of technical textiles. Chapter 30 deals with the exacting requirements and end-uses of technical textiles and the type of knitted structures that can meet these conditions.

It is particularly satisfying that this book has proved useful in education, industry and commerce throughout the world. I hope the above mentioned additions will further increase its usefulness.

Knossington
Leicestershire

David J. Spencer

Skechers EX1050
Skechers v Nike

Acknowledgements

First and second editions

I wish to express my sincere appreciation to all those individuals and organisations who have directly or indirectly contributed towards the publication of this book. Although a full list of names would be too long for publication, I would particularly like to express my gratitude to the following:

Mr Ralph Innes who first raised the subject of this book and then magnanimously handed over the project to me;
Mr J. B. Lancashire who meticulously read through much of the draft of the script and made many helpful comments regarding it;
Mr Eric Keates who originally produced many technical diagrams of structures and mechanisms which are recognised throughout the knitting world by his initials E.A.K.;
Mr Walter Bullwer who has kindly supplied many of the technical photographs;
my colleagues and other members of staff at Leicester Polytechnic particularly the library and clerical staff who have assisted me over the years in obtaining the research material and in collating my notes;
Mr Arthur Martin who first encouraged me to study Textiles at Leicester Polytechnic;
Corahs of Leicester who sponsored my education in knitting technology and with whom I gained invaluable technical experience;
my wife Shirley Ann and my parents who assisted with typing and amending the script with an apology to my family for the disruption which the evening and early morning routine of script writing has tended to produce.

Although it has not always been possible to utilise all the material provided for the book I would also particularly like to thank the following for their generous assistance in this matter:

Mr John T. Millington and Mr John Gibbon of Knitting International; Mr Eric Hertz of Knitting Times; Mr Lehner and Mr Jeff Caunt of Karl Mayer; Mr R.

Skechers EX1050
Skechers v Nike

Bracegirdle of Leicester Museum of Technology; Dr Georg Syamken of Hamburger Kunsthalle Museum; Mr W. M. Whittaker of Camber International; Mr Peter Ford, East Midlands Chairman Information Technology 82; Mr R. Beardall of Foster Textile Sales Ltd; Mr Lewis P. Miles of the International Institute for Cotton; Carole May of the International Wool Secretariat; Mr Bryan Atkins of Marks and Spencer; NASA Press Information Centre; Joan Broughton of the British Knitting Export Council; Mr Roger Munsey of Dubied; Dupont Ltd; Jacob Muller Ltd; Iropa Ltd; Maria Potemski of Corahs; Bentley Engineering Co Ltd; Smitex Ltd; Mr B. Bliss-Hill of William Cotton Ltd; Mr I. Brunton of Monarch and various Divisions of Courtauld's.

Third edition

For this third edition, apart from those already mentioned, I would like to thank the following for their support and assistance:

I wish to express my very special thanks to my son Nigel who has, on numerous occasions and with great patience, rescued my computer system from self-destruction together with the script of this book.

My wife Shirley Ann for her encouragement and practical assistance and our family for accepting the disruption caused by the accumulation of material for the book.

John Cooper, my former colleague at De Montfort University, who was extremely supportive during the onset of my illness. He always gives a hundred per cent in effort and shares a deep practical knowledge of knitting technology.

Ralph Innes for his friendship, encouragement and continuing interest in all aspects of knitting technology and particularly this book.

John Millington, who continues to promote and support an understanding of knitting technology.

John Mowbray, the new Editor of *Knitting International*, for ensuring that the latest information in knitting technology is collated and disseminated.

Michael Dicks and colleagues at Shima Seiki for their hospitality and for constantly up-dating me on the latest developments in flat knitting technology.

Stoll UK for briefing me and providing technical information on Stoll developments.

Nigel Blyth and Monarch UK for providing the latest information on Monarch machinery and software.

Jeff Caunt, Karl Mayer and Kettenwirk-Praxis for so comprehensively covering all aspects of warp knitting technology.

Brian Applebee and Tritex for their support, particularly in getting passes for the ITMA Paris Exhibition.

Finally, I would like to thank Patricia Morrison and Mary Campbell of Woodhead Publishing Limited for their patient reassuring support when deadlines approached.

Skechers EX1050
Skechers v Nike

Figures

1.1 Interweaving 2
1.2 Intertwining and twisting 2
1.3 Interlooping 3
2.1 The Madonna knitting Christ's seamless garment 8
2.2 Hand pin knitting 8
2.3 The action of frame knitting 10
2.4 Hand frame (c. 1820) 11
2.5 Warp knitted fabric on the moon 13
3.1 Basic knitting action of a needle 20
3.2 Main parts of the bearded needle 21
3.3 Main features of the latch needle 23
3.4 Knitting action of the latch needle 25
3.5 Compound needle 27
3.6 Open-stem slide needle 27
4.1 Action of the loop-forming sinker 32
4.2 Action of the knock-over sinker 33
4.3 Loop forming by warp guides 33
4.4 Simple hand-turned Griswold type machine 36
5.1 Intermeshing points of a needle loop 38
5.2 Overlapping and underlapping (warp knitting) 39
5.3 The underlap shog 40
5.4 The closed lap 41
5.5 The open lap 41
5.6 The knitted stitch 42
5.7 An impossible intermeshing 43
5.8 Face- and reverse-meshed loops 44
6.1 Weft knitting 48
6.2 Warp knitting 49
6.3 Overlock seaming 50
6.4 Cup-seaming 50

Skechers EX1050
Skechers v Nike

6.5 Warp-knitted car upholstery 51
6.6 Loop extension and recovery 53
6.7 Yarn flow in knitted structure 53
6.8 Weft knitted loop transfer 53
6.9 The plating relationship of two yarns 56
6.10 Plating in weft knitting 57
6.11 Plating in warp knitting 57
6.12 The movement of loops to form open work 58
6.13 Bra and briefs made from elastic raschel lace fabric 59
7.1 The technical face of plain weft knitted fabric 61
7.2 The technical back of plain weft knitted fabric 62
7.3 The three-dimensional structure of plain weft knitting 62
7.4 Cross-section of knitting head of a single jersey machine 64
7.5 Knitting cycle of a single jersey latch needle machine 65
7.6 Sinker timing on a single jersey machine 66
7.7 Structure of 1×1 rib 67
7.8 Face and reverse loop wales in 1×1 rib 68
7.9 Rib set-outs 69
7.10 Knitting action of a circular rib machine 70
7.11 Needle cam timing for a circular rib machine 71
7.12 Synchronised timing 72
7.13 Delayed timing 72
7.14 Interlock fabric structure 73
7.15 Knitting interlock 75
7.16 Interlock cam system 76
7.17 Purl knitting using sliders 77
7.18 Purl fabric structure 77
7.19 Purl needle transfer action 79
7.20 Purl notation 79
7.21 Basket purl with a collecting course 80
7.22 Basket purl without a collecting course 80
7.23 Purl needle transfer using spring loaded cams 81
8.1 Sequential knitting 84
8.2 Mechanically controlled flat knitting machines 86
8.3 Mechanically controlled circular knitting machines 88
8.4 Mechanically controlled hosiery machines 88
9.1 Float stitch produced on a latch needle machine 91
9.2 Technical face of float stitch 92
9.3 Float plated fabric 93
9.4 Tuck stitch produced on a latch needle machine 94
9.5 Technical face of tuck stitch fabric 95
9.6 Commencing knitting on an empty rib needle 95
9.7 Successive tucks and floats on the same rib needle 96
9.8 Floating across four adjacent plain needles 97
9.9 Tucking over four adjacent plain needles 97
9.10 Selective tucking in the hook 98
9.11 Three step needle selection 98
9.12 Tucking on the latch 99
10.1 An attractive use of horizontal striping 101

Skechers EX1050
Skechers v Nike

10.2 Yarn carrier positioning for intarsia 102
10.3 Examples of intarsia designs knitted on an electronic V-bed machine 103
10.4 Single jersey jacquard 106
10.5 Accordion fabric 107
10.6 Rib jacquard 108
10.7 Three colour jacquard with birds eye backing 109
10.8 Combined links-links and three colour float jacquard 110
11.1 Miss, knit and tuck using different butt lengths 116
11.2 Multi-cam track needle butt control 117
11.3 Mirror repeat needle selection 119
11.4 The development of design areas using selection devices 121
11.5 Fixed pattern key selection 122
11.6 Geometric selection using Brinton trick wheels 124
11.7 Disc selection 126
11.8 Change of presser position from one revolution to the next 127
11.9 Three-step needle selection using a pattern wheel 128
11.10 The building of pattern areas over a number of machine revolutions using pattern wheel selection 129
11.11 Piezo-electronic rib jacquard machine 131
11.12 Moratronic needle selection 132
12.1 Electronic sampling machine 135
12.2 Knitting patterns and programmes generated using automatic routines 137
12.3 Simulated knit package 138
12.4 MKS knitting system for Windows 140
12.5 Linked windows options of fabric view and technical view 142
12.6 The FF programme inserts the control columns and, using the existing jacquard, generates the Sintral programme, which contains all the necessary data for machine control 143
13.1 Twill effects 146
13.2 Single jersey hopsack structure and notation 147
13.3 Double jersey non-jacquard fabrics 149
13.4 Further double jersey fabrics 150
13.5 Twill and poplin double jersey 151
13.6 Single and double blister 152
13.7 Double pique 153
13.8 Milano, punto di Roma and evermonte 153
13.9 Tuck lace 154
13.10 Tunnel inlay 155
13.11 Faneknit inlay device 155
13.12 The modern circular single jersey fabric machine 156
13.13 The Relanit contra knitting action 158
14.1 Three-thread fleecy loop structure 162
14.2 Three-thread fleecy knitting cycle 163
14.3 Fleecy interlock 164
14.4 Horizontal ribs with an ottoman effect on two-tone towelling 165
14.5 Action of the plush sinker 166
14.6 Sliver high pile machine 168

Skechers EX1050
Skechers v Nike

14.7 Wrap patterning 169
15.1 Plain loop transfer stitch 172
15.2 À jour knupf 173
15.3 Knitting on empty rib needle followed by rib loop transfer 174
15.4 Rib loop transfer on a modern V-bed machine 175
15.5 Pelerine stitch 177
15.6 Pelerine transfer action 178
16.1 Turned welt on latch needle machine 180
16.2 Turned welt on bearded needle machine 180
16.3 Accordion welt top 180
16.4 Tubular welt 182
16.5 Roll welt 182
16.6 Racked welt 183
16.7 Wale fashioning (narrowing) 184
16.8 Wale fashioning (widening) 185
16.9 Integrally shaped rib garment pieces 186
16.10 Modern integral garment technology 187
16.11 Full-fashioned shaping calculation 188
16.12 Garment shaping by holding loops on a V-bed flat machine 190
16.13 Stitch shaping 191
16.14 Stitch-shaped thermal underwear 192
17.1 Sixteen-head plain straight bar frame with conveyer 195
17.2 Knitting head of the straight bar frame 197
17.3 Movement of knitting elements 198
17.4 Fashioning points 201
17.5 The fashioning action 202
17.6 Rib to plain 205
18.1 Passage of yarn from package to yarn carrier 210
18.2 Knitting action of V-bed flat machine 212
18.3 Cam system of simple hand flat 213
18.4 Yarn carrier positioning 217
18.5 Half-cardigan loop structure 218
18.6 Full cardigan 219
18.7 Racked rib 220
18.8 Aran knit sweater 222
19.1 Mechanical jacquard selection on a V-bed flat machine 227
19.2 Shimatronic SEC cam system 228
19.3 Knitting elements 229
19.4 Presser cams 229
19.5 Action of the presser foot 233
19.6 Multi-gauge technique garment 235
19.7 (a) Split stitch using latch needles. (b) Split stitch using compound needles 236
19.8 The FIRST 123 three-system, short-bed computerised flat knitting machine 237
19.9 Tubular plain knitting on a flat machine 238
19.10 Tubular rib knitted on arranged needle sequence 239
19.11 Half gauge tubular rib 239
19.12 Comparison of the new slide needle with the latch needle 240

Skechers EX1050
Skechers v Nike

19.13 The TFK driving system 242
20.1 RTR circular garment length revolving cam-box rib machine 245
20.2 Close-up of RTR revolving cam-box 246
20.3 Cam system elements of a circular purl machine 248
20.4 Part of a purl garment knitting sequence 249
20.5 Cylinder cam system of an RTR rib loop transfer machine 251
20.6 The RTR dial cam system 252
20.7 Body-size seamless garment 254
21.1 Close-up view of the knitting head of a 4-feeder seamless hose machine 257
21.2 Notation of 3 × 1 micromesh 261
21.3 Double cylinder half hose machine 263
21.4 Heel produced by reciprocation 265
21.5 Lin Toe toe-closing on the machine 269
21.6 GL one-piece tights 272
22.1 Trip-tape positive feed 276
22.2 Warp let-off regulator 278
22.3 Model of weft-knitted loop formation indicating the mechanism of 'robbing-back' 283
23.1 Guide bar lapping movement 286
23.2 Tricot machine HKS 2-3 287
23.3 Guide bar swinging and shogging mechanism 288
23.4 Warp knitting lapping and chain notation 292
23.5 Overlap/underlap variations 293
23.6 Open and closed lap pillar stitches 294
23.7 Atlas lapping 295
23.8 Face and back of single guide bar warp knitted fabric 296
24.1 Knitting elements in a bearded needle tricot machine 299
24.2 Cross-section of a bearded needle tricot machine 299
24.3 Knitting cycle of a bearded needle tricot machine 300
24.4 Knitting elements in a latch needle raschel machine 302
24.5 Cross-section of a latch needle raschel machine 303
24.6 Knitting action of a single needle bar latch needle raschel machine 304
24.7 Knitting action of a compound needle tricot machine 306
24.8 The crochet machine 307
24.9 Knitting elements in a crochet machine 308
24.10 Knitting action of a crochet machine 309
24.11 A range of crochet fabrics 310
25.1 Notations of two guide bar warp knitted fabrics 314
25.2 Plating position of the front guide bar underlap 315
25.3 Plating appearance on the technical back of a two guide bar fabric 315
25.4 Plating position of the front guide bar overlap 316
25.5 Plating appearance on the technical face of a two guide bar fabric 316
25.6 Technical back of sharkskin fabric 318
25.7 Technical back of queenscord fabric 318
25.8 Technical back of raised loop velour 320

Skechers EX1050
Skechers v Nike

26.1 Miss-lapping 323
26.2 Structure of a balanced net 324
26.3 Notation of 2 × 2 sandfly net 325
26.4 Pin net loop structure and lapping diagram 325
26.5 Loop structure and notation of sandfly net 326
26.6 Three wale wide cord 326
27.1 The action of inlay in warp knitting 328
27.2 Arrangement of guide bars in a fall-plate raschel 331
27.3 Fall-plate raised out of action 332
27.4 Fall-plate lowered into action 332
27.5 Simple fall-plate loop structure 332
27.6 Knitting fall-plate designs 332
27.7 Weft insertion principles 334
27.8 Magazine weft insertion 335
27.9 Cut presser lapping movement 336
27.10 Shell stitch 337
27.11 Cut presser knop fabric 338
28.1 Multi-guide bar raschel lace machine 341
28.2 Automatic overlap guide bar drive 342
28.3 Raschel lace guide bar nesting 343
28.4 Embroidery patterning 343
28.5 The summary drive (SU) electronic patterning mechanism 345
28.6 28 gauge (E 14) pillar inlay using outline threads 346
28.7 36 gauge (E 18) standard gauge 346
28.8 48 gauge (E 24) fine gauge 347
28.9 Raschel lace five course tulle with inlay 348
28.10 Three bar marquisette 349
28.11 Three bar voile 349
28.12 Elastane fabrics 350
28.13 Jacquard inlay deflection units 351
28.14 Mechanical jacquard apparatus 352
28.15 Jacquard segment of 16 or 32 segments and jacquard element 353
28.16 Leaver's lace effect 354
28.17 Textronic MRPJ 59/1/24 raschel lace machine 355
29.1 Double needle bar lapping notations 358
29.2 Loop diagram of double faced double needle bar fabric 359
29.3 Knitting action of bearded needle simplex machine 360
29.4 Knitting action of a double needle bar raschel 362
29.5 Lapping diagram and notation of a seamless tube knitted on a double needle bar raschel 364
29.6 Principle of knitting tights on a double needle bar raschel 366
29.7 Fruit and vegetable sacks knitted on double needle bar raschel machines 367
29.8 Notation for a three guide bar cut plush 368
29.9 Notation for a five guide bar cut plush 368
30.1 EQT full-body competition swimsuit 371
30.2 Directionally-structured fibres (DSF) geotextile constructions 373
30.3 Principle of the LIBA multi-axial magazine weft insertion warp knitting machine 374

Skechers EX1050
Skechers v Nike

30.4 Malimo stitch bonding machine knitting head 375
30.5 Raschel-knitted spacer structure used for car seat covers 377
30.6 Tube connection with rectangular cross-section 378
30.7 Funnel-shaped tube connection in Kevlar 378

Skechers EX1050
Skechers v Nike

Contents

List of figures xv
Preface xxii
Acknowledgements xxiv

1 An introduction to textile technology 1
1.1 The evolution of textiles 1
1.2 Textile fabrics 1
1.3 Textile yarns and fibres 3
1.4 Yarn count numbering systems 4
1.5 Conversion formulae 5

2 From hand knitting to hand frame knitting 7
2.1 The evolution of hand knitting 7
2.2 The spread of knowledge of hand pin knitting 7
2.3 The principles of hand knitting using two pins 8
2.4 The invention of the stocking hand frame 9
2.5 The bearded needle 10
2.6 The principles of frame knitting 10
2.7 The evolution of other weft knitting machines 12
2.8 The development of warp knitting 12
2.9 The potential of knitting technology 13
2.10 Meeting the challenge of new markets 14

3 General terms and principles of knitting technology 16
3.1 Machine knitting 16
3.2 The knitted loop structure 16
3.3 A course 16
3.4 A wale 17
3.5 Stitch density 17
3.6 Technically upright 18

Skechers EX1050
Skechers v Nike

3.7 Design appearance requirements 18
3.8 The main features of the knitting machine 18
3.9 The needle 19
3.10 Fabric draw-off 19
3.11 The front of rectilinear needle bar machines 19
3.12 The basic knitting action of a needle 20
3.13 The bearded needle 20
3.14 The latch needle 22
3.15 Friction and frictionless needles 26
3.16 The bi-partite compound needle 26
3.17 A comparison of latch and compound needles 27
3.18 Machine gauge 29

4 Basic mechanical principles of knitting technology 31
4.1 The sinker 31
4.2 The jack 33
4.3 Cams 33
4.4 The two methods of yarn feeding 36
4.5 The three methods of forming yarn into needle loops 37

5 Elements of knitted loop structure 38
5.1 The needle loop 38
5.2 The sinker loop 39
5.3 Warp knitted laps 39
5.4 The overlap 40
5.5 The underlap 40
5.6 The closed lap 41
5.7 The open lap 41
5.8 Wrapping 42
5.9 The knitted stitch 42
5.10 The intermeshing points of a needle loop 43
5.11 The face loop stitch 43
5.12 The reverse loop stitch 43
5.13 Single-faced structures 44
5.14 Double-faced structures 44
5.15 A balanced structure 45
5.16 Face and reverse stitches in the same wale 45
5.17 Selvedged fabric 45
5.18 Cut edge fabric 45
5.19 Tubular fabric 45
5.20 Upright loop structures 46
5.21 Knitting notations 46

6 Comparison of weft and warp knitting 48
6.1 Yarn feeding and loop formation 48
6.2 The two industries 49
6.3 Productivity 52
6.4 Machine design 52
6.5 Comparison of patterning and fabric structures 52

Skechers EX1050
Skechers v Nike

6.6 Course length and run-in per rack 53
6.7 Fabric quality 54
6.8 Structural modifications commonly used in weft and warp knitting 54

7 The four primary base weft knitted structures 60
7.1 Introduction 60
7.2 Plain structure 61
7.3 Rib structure 67
7.4 Interlock structure 73
7.5 Purl structure 76

8 The various types of weft knitting machines 82
8.1 Fabric machines and garment-length machines 82
8.2 Knitting welts and rib borders 83
8.3 Integral knitting 84
8.4 The three classes of weft knitting machines 85

9 Stitches produced by varying the sequence of the needle loop intermeshing 90
9.1 Knitted stitches 90
9.2 The held loop 90
9.3 The drop or press-off stitch 91
9.4 The float stitch 92
9.5 Float plating 93
9.6 The tuck stitch 94

10 Coloured stitch designs in weft knitting 100
10.1 Horizontal striping 101
10.2 Intarsia 102
10.3 Plating 104
10.4 Individual stitch selection 105
10.5 Jacquard design areas 110
10.6 Worked example 110

11 Pattern and selection devices 115
11.1 Weft knitted patterns 115
11.2 Different lengths of butt 115
11.3 Different butt positions 117
11.4 Multi-step butt set-outs 118
11.5 Selection devices 118
11.6 Element selection 118
11.7 Selection area arrangement 120
11.8 Full jacquard mechanical needle selection 123
11.9 Multi-step geometric needle selection 123
11.10 Needle selection by disc 125
11.11 The pattern wheel 126
11.12 Pattern wheel design areas 128
11.13 Electronic needle selection 130

Skechers EX1050
Skechers v Nike

12 Electronics in knitting 134
12.1 The disadvantages of mechanical control 134
12.2 The disadvantages of mechanical programming 134
12.3 The advantages of electronic control and programming 134
12.4 The compatibility of electronic signals and knitting data 135
12.5 Microprocessors and computers 136
12.6 The computerised knitting machine 136
12.7 Computer graphics and pattern preparation 137
12.8 The Stoll CAD pattern preparation system 140
12.9 The Shima total design system 144

13 Circular fabric knitting 145
13.1 Weft knitted fabric production 145
13.2 Single- and double-jersey compared 146
13.3 Simple tuck and float stitch single-jersey fabrics 146
13.4 The history of double-jersey 147
13.5 Types of double-jersey structure 148
13.6 Non-jacquard double-jersey structures 148
13.7 Double jersey inlay 153
13.8 The modern circular fabric knitting machine 155
13.9 Versatility and quick response 157
13.10 The 'contra' knitting technique 158
13.11 Circular-machine production calculations 159

14 Speciality fabrics and machines 161
14.1 The range of speciality fabrics 161
14.2 The production of fleecy on sinker-top machines 162
14.3 Fleecy interlock 164
14.4 Plush 164
14.5 The bearded needle sinkerwheel machine 165
14.6 Sinker plush knitted on single-jersey latch needle machines ... 165
14.7 Full-density patterned plush 167
14.8 Cut loop 167
14.9 Double-sided plush 167
14.10 Sliver or high-pile knitting 168
14.11 Wrap patterning 169

15 Loop transfer stitches 171
15.1 Uses of loop transfer 171
15.2 The four main types of transfer stitches 171

16 Welts, garment sequences and knitting to shape 179
16.1 The welt 179
16.2 Rib welts 181
16.3 Separation 183
16.4 Imparting shape during knitting 184
16.5 Integral garment knitting 193

Skechers EX1050
Skechers v Nike

17 The straight bar frame and full-fashioning 194
17.1 The development of the straight bar frame 194
17.2 Fully-fashioned articles 196
17.3 Stocking production 196
17.4 Underwear and knitwear 196
17.5 Knitting motions of the straight bar frame 196
17.6 Knitting action of the plain straight bar frame 197
17.7 Loop transfer 201
17.8 The fashioning action 202
17.9 Automatic control 203
17.10 The welt 203
17.11 The rib-to-plain machine 204
17.12 Patterned structures 205
17.13 The challenge of latch needle machinery 205

18 Flat knitting, basic principles and structures 207
18.1 History 207
18.2 The two types of flat machine 207
18.3 Flat machine gauges 208
18.4 Conversion from Cottons Patent to V-bed gauge 208
18.5 Knitting widths 208
18.6 Yarn counts 209
18.7 Simple hand-manipulated V-bed rib flat machines 209
18.8 Stitch cam settings 214
18.9 Spring-loaded cams 214
18.10 Two or more cam systems 215
18.11 Split cam-carriages 215
18.12 Direct and indirect yarn feed 216
18.13 Yarn carrier arrangement 216
18.14 Typical structures knitted on flat machines 218

19 Automatic power flat knitting 224
19.1 History 224
19.2 The MacQueen concept 224
19.3 Power flat machines 225
19.4 The versatility of V-bed power flat knitting 225
19.5 Electronic controls replace mechanical controls 225
19.6 The garment sequence programme 226
19.7 Mechanical jacquard selection 226
19.8 The Shima Seiki electronic selection system 226
19.9 The take-down system 230
19.10 The fixed-stroke carriage traverse 230
19.11 Meeting the requirements of a shaping machine 231
19.12 The multiple-gauge technique 234
19.13 The split stitch 236
19.14 Multi-carriage flat machines 236
19.15 Seamless glove knitting 237
19.16 The WholeGarment knitting technique 237

Skechers EX1050
Skechers v Nike

19.17 The Shima model FIRST 240
19.18 The Tsudakoma TFK machine 241

20 Circular garment-length machines 244
20.1 Circular versus flat machines 244
20.2 The double-cylinder garment-length machine 247
20.3 The RTR garment-length machine 250
20.4 Jumberca cylinder and dial and double-cylinder machines 253
20.5 Mecmor Variatex machines 253
20.6 The 'seamless' bodywear garment machine 255

21 The manufacture of hosiery on small-diameter circular machines 256
21.1 Types of hosiery 256
21.2 Classes of hosiery machines 257
21.3 Gauge 258
21.4 The early development of ladies' fine-gauge hosiery machines 258
21.5 The advent of nylon 259
21.6 Trends in fine-gauge hosiery since 1956 259
21.7 Ladder-resist structures 261
21.8 The development of the double-cylinder machine 262
21.9 Single-cylinder sock machines 262
21.10 Timing and control of mechanical changes on circular hosiery machines 262
21.11 Adjustment of loop length 264
21.12 The double-cylinder slider butt set-out 264
21.13 Production of heels and toes 265
21.14 Automatic separation 266
21.15 Seamed toe closing 267
21.16 Automatic toe closing on the knitting machine 267
21.17 Tights 270

22 Aspects of knitting science 274
22.1 Knitted loop-shape and loop-length control 274
22.2 Loop length 275
22.3 Warp let-off 277
22.4 Weft knitted fabric relaxation and shrinkage 279
22.5 Knitted fabric geometry 280
22.6 Tightness factor 281
22.7 Robbing back 282
22.8 Needle bounce and high-speed knitting 283
22.9 The Cadratex unit 284
22.10 Positive needle control 284

23 Basic warp knitting principles 286
23.1 Construction of warp knitted fabrics 286
23.2 The warp beams 287
23.3 The guide bar 287
23.4 The guides 287

Skechers EX1050
Skechers v Nike

23.5 Single needle bar structures 288
23.6 The pattern mechanism 289
23.7 The chain links 289
23.8 The electronic guide bar control system 291
23.9 The development of lapping diagrams and chain notations ... 291
23.10 Single- or double-needle overlaps 291
23.11 The five basic overlap/underlap variations 293
23.12 The direction of lapping at successive courses 293

24 Classes of warp knitting machines 298
24.1 Characteristics of tricot and raschel machines 298
24.2 The tricot machine 298
24.3 The raschel machine 301
24.4 The compound-needle warp knitting machine 305
24.5 The crochet machine 306
24.6 The Waltex machine 311
24.7 Warping 311

25 Plain tricot structures knitted with two full set guide bars 313
25.1 Rules governing two guide bar structures 313
25.2 Two bar tricot 316
25.3 Locknit 317
25.4 Reverse locknit 317
25.5 Sharkskin 317
25.6 Queenscord 318
25.7 Double atlas 319
25.8 Satin 319
25.9 Velour and velvet 319
25.10 Overfed pile structures 320
25.11 Typical run-in ratios for nylon yarns 321

26 Surface interest, relief and open-work structures 322
26.1 Basic principles 322
26.2 Miss-lapping 323
26.3 Part-threaded guide bars 323

27 'Laying-in' and fall-plate 328
27.1 Laying-in and weft insertion 328
27.2 General rules governing laying-in in warp knitting 329
27.3 Mesh structures 330
27.4 Fall-plate patterning 330
27.5 Full-width weft insertion 333
27.6 Magazine weft insertion 334
27.7 Cut presser and miss-press structures 335
27.8 Spot or knop effects 337
27.9 Terry by the press-off method 338

28 Multi guide bar machines and fabrics 340
28.1 The development of raschel lace 340
28.2 The success of raschel lace 340

Skechers EX1050
Skechers v Nike

28.3 Pattern guide bars 341
28.4 Guide bar nesting 342
28.5 Multi bar tricot lace machines 342
28.6 Chain links and electronic control of shogging 343
28.7 The summary drive 344
28.8 Raschel mesh structures 344
28.9 Marquisette and voile 348
28.10 Elasticised fabrics 349
28.11 Jacquard raschels 351
28.12 The Mayer Jacquardtronic multi-bar lace raschels 352

29 Double needle bar warp knitting machines 357
29.1 Operating principles 357
29.2 Double needle bar basic lapping principles 358
29.3 Using two fully-threaded guide bars 358
29.4 The simplex machine 359
29.5 The double needle bar raschel 361

30 Technical textiles 370
30.1 Markets for technical textiles 370
30.2 The properties of warp knitted structures 370
30.3 End-uses for technical textiles 371
30.4 Geotextiles 372
30.5 Knitted wire 372
30.6 The advantages of warp knitted nets 372
30.7 Composites 374
30.8 Warp knitted multi-axial weft insertion fabrics 374
30.9 Stitch bonding or web knitting 375
30.10 Spacer fabrics 376
30.11 Circular warp knitting 377
30.12 V-bed technical fabrics 377

Appendix 380

Index 381

Skechers EX1050
Skechers v Nike

1

An introduction to textile technology

1.1 The evolution of textiles

Although man's first articles of clothing and furnishing were probably animal skin wraps, sometimes stitched together using bone needles and animal sinews, he soon attempted to manipulate fibrous materials into textile fabrics, encouraged by experience gained from interlacing branches, leaves and grasses in the production of primitive shelters.

The word '*textile*' originates from the Latin verb *texere* – to weave – but, as the Textile Institute's Terms and Definitions Glossary explains, it is now 'a general term applied to any manufacture from fibres, filaments or yarns characterised by flexibility, fineness and high ratio of length to thickness'.

1.2 Textile fabrics

Textile fabrics can be produced directly from webs of fibres by bonding, fusing or interlocking to make non-woven fabrics and felts, but their physical properties tend to restrict their potential end-usage. The mechanical manipulation of yarn into fabric is the most versatile method of manufacturing textile fabrics for a wide range of end-uses.

There are three principal methods of mechanically manipulating yarn into textile fabrics: interweaving, intertwining and interlooping. All three methods have evolved from hand-manipulated techniques through their application on primitive frames into sophisticated manufacturing operations on automated machinery.

1 *Interweaving* (Fig. 1.1) is the intersection of two sets of straight threads, warp and weft, which cross and interweave at right angles to each other. Weaving is by far the oldest and most common method of producing continuous lengths of straight-edged fabric.
2 *Intertwining and twisting* (Fig. 1.2) includes a number of techniques, such as braiding and knotting, where threads are caused to intertwine with each other

Skechers EX1050
Skechers v Nike

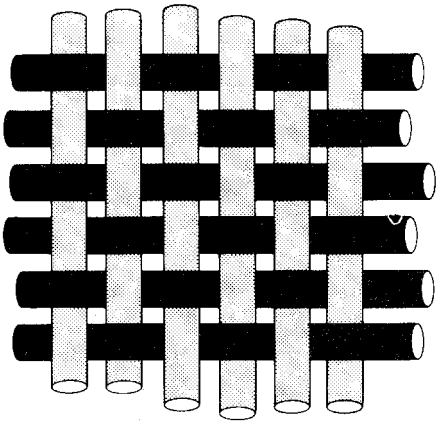

Fig. 1.1 Interweaving.

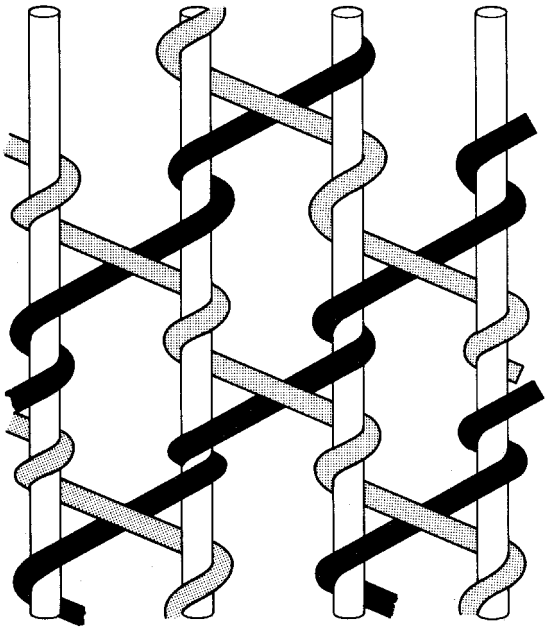

Fig. 1.2 Intertwining and twisting.

at right angles or some other angle. These techniques tend to produce special constructions whose uses are limited to very specific purposes.

3 *Interlooping* (Fig. 1.3) consists of forming yarn(s) into loops, each of which is typically only released after a succeeding loop has been formed and intermeshed with it so that a secure ground loop structure is achieved. The loops are also held together by the yarn passing from one to the next. (In the simplified illustration this effect is not illustrated.)

Knitting is the most common method of interlooping and is second only to weaving as a method of manufacturing textile products. It is estimated that over 7 million

Skechers EX1050
Skechers v Nike

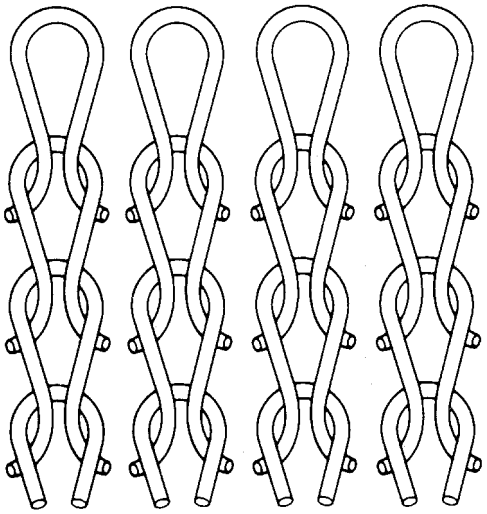

Fig. 1.3 Interlooping.

tons of knitted goods are produced annually throughout the world. Although the unique capability of knitting to manufacture shaped and form-fitting articles has been utilised for centuries, modern technology has enabled knitted constructions in shaped and unshaped fabric form to expand into a wide range of apparel, domestic and industrial end-uses.

1.3 Textile yarns and fibres

Yarns are the raw materials manipulated during knitting. A *yarn* is defined as 'an assembly, of substantial length and relatively small cross-section, of fibres or filaments, with or without twist'. The term '*thread*' is loosely used in place of yarn and does not imply that it is as smooth, highly twisted and compact as a sewing thread.

Textile fibres are the raw materials of the yarns into which they are spun. There are two configurations of fibres: staple fibres and filament fibres.

- *Staple fibres* are of comparatively short length – for example, cotton and wool fibres, which require spinning and twisting together in order to produce a satisfactory length of yarn of suitable strength.
- A *filament* is a fibre of indefinite length – for example silk, which requires combining with other filaments, usually with some twist, in order to produce a yarn of sufficient bulk.

Originally, all textile fibres occurred naturally – for example, animal fibres such as wool and silk, and vegetable fibres such as cotton and flax. The first artificially-produced fibres were the *rayons*, developed by the regeneration of long-chain cellulose polymers that occur naturally in wood pulp and cotton linters. Derivatives such as cellulose acetate and triacetate were later produced by the acetylation of cellulose polymers. *Nylon*, the first truly synthetic fibre, was invented by

Skechers EX1050
Skechers v Nike

Wallace H. Carothers in 1938. It is based on a synthetically-built, long-chain polyamide polymer that previously did not occur naturally. A wide range of synthetic fibre polymers, including polyesters and polyacrylics, has since been developed. Many of the synthetic polymers may be converted into yarns in continuous filament form (in which state they were extruded during manufacturing). The filaments may also be cut or broken into staple fibre form, to be later spun on systems originally developed for natural fibres such as wool or cotton.

The properties of more than one type of fibre may be incorporated into a fabric as the result of blending the fibres during spinning, or by knitting two or more types of yarn.

Knitting requires a relatively fine, smooth, strong yarn with good elastic recovery properties. The worsted system has proved particularly suitable for spinning yarns used for knitwear, outerwear and socks, and the combed cotton system for underwear, sportswear and socks.

The introduction of synthetic fibres, which can be heat set in a permanent configuration, has led to the development of *texturing processes* that directly convert these filaments into *bulked yarns*, thus bypassing the staple fibre spinning process. During texturing, the filaments are disturbed from their parallel formation and are permanently set in configurations such as crimps or coils that help to entrap pockets of air and confer properties such as bulkiness, soft handle, porosity, drape, cover, opacity and (if necessary) elasticity to the resultant yarn. Examples of yarns of this type include *false twist nylon* and *Crimplene*, the latter being a registered trade name for a technique whereby the properties of the textured polyester yarn are modified during a second heat-setting operation so that the stitch clarity, handle and stability of the fabric are improved.

The development of synthetic fibres and of their texturing processes has proved particularly beneficial to the knitting industry and has resulted in a close association between the two industries. The most recent development is the widespread use of the elastane fibre *Lycra* to support the elastic properties of knitted garments. The period from the mid-1960s to 1973 is often regarded by knitters as a 'golden age' because fashionable demand for textiles composed of synthetic fibres reached a peak during that period [1,2].

1.4 Yarn count numbering systems

A *yarn count* number indicates the *linear density* (yarn diameter or fineness) to which that particular yarn has been spun. An important consideration in choosing a yarn count is the *machine gauge* which defines the spacing of the needles in the needle bed (usually as *needles per inch*).

Obviously, the finer the machine gauge, the finer the required yarn count. Choice of yarn count is also restricted by the type of knitting machine employed and the knitting construction.

The count, in turn, influences the cost, weight, opacity, handle and drapability of the resultant structure. In general, staple spun yarns tend to be comparatively more expensive the finer their count because finer fibres and a more exacting spinning process are necessary in order to prevent the yarn from showing an irregular appearance.

Unfortunately, a number of differently based count numbering systems are still currently in use. Historically, most systems are associated with particular yarn-

Skechers EX1050
Skechers v Nike

spinning systems. Thus, a yarn spun on the worsted system from acrylic fibres may be given a worsted count number.

The *worsted count system* is of the *indirect* type based on *length per fixed unit mass*, i.e. the higher the count number, the finer the yarn. The weight is fixed (1 lb) and the length unit (number of 560-yard hanks) varies. A 1/24's worsted yarn (24 × 560-yard hanks weighing 1 lb) will be twice the cross-sectional area of a 1/48's worsted yarn (48 × 560-yard hanks weighing 1 lb).

The designation 2/24's worsted indicates that the yarn contains two ends of 1/24's so that the resultant count is twice the cross-sectional area (24/2 = 12's).

The denier system is used in continuous filament silk spinning, and when the silk throwsters began to process textured synthetic continuous filament yarns, these nylon and polyester yarns were given denier count numbers.

The *denier system* is of the *direct* type based on *mass per fixed unit length*, i.e. the lower the number, the finer the yarn. The length unit is fixed (9000 metres) and the weight unit (in grams) is variable. A 70 denier yarn (9000 metres weigh 70 g) will be twice as fine as a 140 denier yarn (9000 metres weigh 140 g). A 2/70 denier yarn will give a resultant count of 140 denier.

The *tex system* was introduced as a universal system to replace all the existing systems. As tex sometimes produces a count number having a decimal point, it has been found more satisfactory to multiply the count number by 10 to give a *deci-tex* number. The tex system has not been universally accepted, particularly for spun yarns, and on the continent of Europe the metric system is used for these yarns.

In this book, common commercial practice has been followed, with decitex being used for filament yarn counts and the metric system for spun staple yarn counts.

The main count systems, with their continental abbreviations, are as follows:

Indirect Systems

Bradford Worsted System (NeK) – the number of 560-yard hanks that weigh 1 lb (453.6 g).

English Woollen System (NeW) (Yorkshire Skeins) – the number of 256-yard hanks that weigh 1 lb.

English Cotton System (NeB) – the number of 840-yard hanks that weigh 1 lb.

Continental Metric System (Nm) (Cotton System) – the number of 1000-metre hanks that weigh 1000 g (1 kg).

Direct Systems

Denier System (Td) – the weight in grams of 9000 metres.

Tex System (Tt) – the weight in grams of a 1000 metres.

Decitex System (dtex) – the weight in grams of 10 000 metres.

1.5 Conversion formulae

Tex counts may be obtained from count numbers in other systems by using one of the following formulae:

$$\frac{886}{\text{NeK}} \quad \frac{1938}{\text{NeW}} \quad \frac{591}{\text{NeB}} \quad \frac{1000}{\text{Nm}} \quad \frac{\text{Td}}{9}$$

(To obtain the decitex count, multiply the tex result by ten.)

Skechers EX1050
Skechers v Nike

Example: An interlock underwear fabric is weft knitted from 1/40's NeB at a weight of 5 ounces per square yard. Convert the yarn count to decitex and the fabric weight to grams per square metre.

(a) The conversion for Tex is 591/NeB so it is necessary to also multiply by 10 to obtain decitex.

The *decitex* count therefore $= (591/40) \times 10 = 148$ dtex

(b) $1\,\text{oz} = 28.35\,\text{g}$ and $1\,\text{yd}^2 = 0.836\,\text{m}^2$.

Therefore $5\,\text{oz/yd}^2 = (5 \times 28.35) = 142\,\text{g} \times 1/0.836 = 170\,\text{g/m}^2$.

References

1. GIBBON, J. E., Crimplene: profile of a yarn's problems and successes, *Hos. Trade J.*, (1965), Sept., 110–12.
2. LAW, I. M., Crimplene: a fibre legend, *Knit. Int.*, (1981), June, 78–81.

Further information

COLLIER, A. M., *A Handbook of Textiles*, (1974), Pergamon Press.
JOSEPH, M. L., *Introductory Textile Science*, (1966), Rinehart and Winston.
GREENWOOD, K., *Weaving: Control of Fabric Structure*, Merrow, UK.
LORD, P. R. and MOHAMED, M. H., *Weaving: Conversion of Yarn to Fabric*, (1976), Merrow.
COOKE, J. G., *Handbook of Textile Fibres*, (1968), Merrow, UK, I, II.
MORTON, W. E. and HEARLE, J. W. S., *Physical Properties of Textile Fibres*, (1975), Textile Inst., Manchester, UK, and Heinemann, London, UK.
HARRISON, P. W., *Bulk, Stretch and Texture*, (1966), Textile Institute, Manchester, UK.
RAY, G. R., *Modern Yarn Production from Manmade Fibres*, (1962), Columbine Press.
WILKINSON, G. D. A., Knitter's guide to texturising processes, *Knit. Outwr Times*, (1970), 22nd June, 57–65.
CHARNOCK, I. L. A., Yarn quality for knitting. *Text. Inst. and Ind.*, (1977), **15**, (5), 175–7.
HALL, J. D., The contribution of synthetic fibres and plastics to the textile industry, *Text. Inst. and Ind.*, (1965), **3**, (10), 265–7.

Skechers EX1050
Skechers v Nike

2

From hand knitting to hand frame knitting

2.1 The evolution of hand knitting

The term *knitting* describes the technique of constructing textile structures by forming a continuous length of yarn into columns of vertically intermeshed loops.

It relies heavily on the availability of fine, strong, uniformly spun yarn. The term 'knitting' dates from the mid-sixteenth century, earlier words such as the Saxon 'cnyttan' and the Sanskrit 'nahyat' being less precise, indicating that knitting probably evolved from sources such as the experience gained by knotting and Coptic knitting.

In *Coptic knitting* or *Nalbinding*, an upside-down looped structure is produced using a single-eyed needle (like a sewing needle) containing a short length of yarn. Normally, crossed loops are formed. The technique can achieve fashioning, closing, circular knitting and stitch patterning. Leicester's Jewry Wall Museum possesses a sock of cross stitch construction from the Antinoe site in Roman Egypt dating from the fifth century AD [1].

2.2 The spread of knowledge of hand pin knitting

Weft knitting, using the fingers to produce open loop structures, may well have been practised long before the use of hand-held pins. Hand pin knitting was first recorded in religious paintings in 1350 in Northern Italy. It then spread through the rest of Europe [2]. Maitre Bertram's painting of Mary knitting Christ's seamless garment (Fig. 2.1) is dated to just before 1400. Unfortunately, Christ's garment is more likely to have been made by the 'sprang' or braiding technique, in a similar manner to the vestments of Saint Cuthbert [3].

Cap knitting was established as a technique in Britain by 1424, and by 1488 Parliament controlled the price of knitted caps. Coarse woollen stockings may have been worn prior to 1600 but they were not as fine as woven cloth stockings cut on the bias to give greater extensibility. Henry VIII (1509–1547) was the first British

Skechers EX1050
Skechers v Nike

Fig. 2.1 The Madonna knitting Christ's seamless garment. The earliest recorded illustration of a knitted garment. Part of a church architectural painting by Maitre Bertram (1345–1415) [Hamburg Kunsthalle Museum].

monarch to wear fine expensive knitted silk stockings. Queen Elizabeth I wore them in about 1561 and was so impressed by their elasticity and fineness that she never again wore cut and sewn woven hose [4]. In 1564 William Rider knitted a pair of worsted stockings by copying a pair knitted in Italy.

2.3 The principles of hand knitting using two pins

In Fig. 2.2a, the left-hand pin A is retaining the previously formed row of loops (course). The right-hand pin B is being used to draw through and retain the next course of loops, one at a time.

In Fig. 2.2b, pin B has drawn the newly formed loop 2 through loop 1 of the previous course. Pin A then releases loop 1, which hangs from loop 2, which itself is hanging from pin B. (Note that loop 1 has been drawn under the head of the lower loop and that loop 2 has been drawn over the head of loop 1.)

At the start of the next row (course), the pins may be changed hands and the action continued. If this happens, the fabric will be turned around and the next course of loops will mesh through from the opposite side of the fabric. Each course

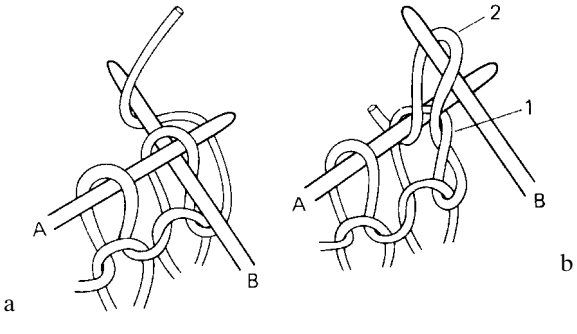

Fig. 2.2 Hand pin knitting.

Skechers EX1050
Skechers v Nike

of loops will be drawn through the heads of the previous course of loops, in the *same direction* in the fabric. As the pins are straight and pointed, skill is required to ensure that the loops do not slip off the end and cause *drop stitches*.

2.4 The invention of the stocking hand frame

'The Reverend' William Lee 'of Calverton in Nottinghamshire' is generally credited with inventing the stocking hand frame in 1589. 'The advance it represented, by mechanising complex hand movements at a single stroke, was 150–200 years in advance of its time.' [5]

The concept of its operation was so brilliant that, through an evolutionary process of technical refinement, modification and innovation by many inventors throughout the world over the succeeding centuries, it laid the foundations for today's weft and warp knitting and machine lace industries.

Unfortunately there is no dated documentary evidence concerning Lee's life, efforts and achievements prior to 1589 [6]. Imaginative descriptions and paintings from a much later period provide a mythical and confusing back-cloth to the event. The first extant illustrations of a frame were drawn for *Colbert* by the French spy *Hindret* in 1656, and the earliest existing stocking frames appear to date from about 1750.

Lee's original frame was undoubtedly crude, and knitted poor quality woollen stockings with a gauge of only 8 needles per inch (25 mm). It required two men to operate it. Not until 1750 were frame knitted stockings accepted as comparable in quality to those knitted with pins. Lee is believed to have knitted a pair of silk stockings in 1596/7 [7], although a reported gauge of 20 needles per inch seems to be too fine for that period. A gauge of 16 needles per inch was only commercially attained after 1620, when *Aston* applied lead *sinkers* (dividers) in the hand-frame.

Frustrated in his attempts to obtain a patent from either Elizabeth I or James I by the fear of unemployment amongst hand pin knitters, William Lee and his brother James took their nine machines and knitters to France at the invitation of Henry IV in 1609. Lee set up a workshop in Rouen and signed a partnership agreement with Pierre de Caux in 1611, with a further agreement in 1614.

The protection of Protestant workers in France ended when Henry IV was assassinated in 1610 and it is believed that (at an unspecified date) James brought most of the machines and knitters back to London and that William died in poverty in Paris whilst hiding from persecution. England then prohibited the export of stocking frames, but Hindret's accurate drawings and knowledge enabled frames to be built in Paris from 1656 onwards and thus the knowledge of their operation spread across Europe.

Gradually London declined as the centre of frame-work knitting and, by 1750, the major areas could be broadly classified as Derby for silk, Nottingham for cotton and Leicester for wool knitting.

Improvements in the spinning of cotton yarns led particularly to an increase in knitted underwear and open-work point lace fabrics, in addition to cotton hose. The knitting industry then expanded rapidly until 1810 when over-production resulted in stagnation, unemployment and the Luddite riots. It was not until conditions improved in the second half of the century that new innovations and inventions in knitting technology received encouragement and practical application.

Skechers EX1050
Skechers v Nike

2.5 The bearded needle

From a logical viewpoint, Lee's hand frame has more in common with a knitting *peg frame* (Stuhl) than with a pair of hand-held pins. There is evidence of a prior art of peg frame knitting dating back at least to 1535 in Strasbourg [8].

Lee quickly discarded the idea of trying to imitate hand-held circular knitting. His brilliance lay in his adaptation and integration of the straight peg frame with the foot- and hand-controls of the hand-operated weaving loom, and with the employment of a hooked loop holder (*the bearded needle*) for loop intermeshing.

The bearded needle has an extended hook or beard that is pressed to enclose the newly-formed loop so that this loop can be drawn through the previously-formed loop as the latter is being released.

Lee set the needles in a row across the width of the frame, whose working parts were more intricate than that of the existing hand-weaving loom. Skilled hand knitters could only form up to 100 loops per minute whereas Lee's first frame could achieve 500 to 600 loops per minute, and the later silk hose frame could produce 1000 to 1500 loops per minute.

2.6 The principles of frame knitting

Figure 2.3 shows a side view of the knitting elements. After the weft yarn has been laid by hand across the horizontally-mounted needle bed, thin metal sinkers descend

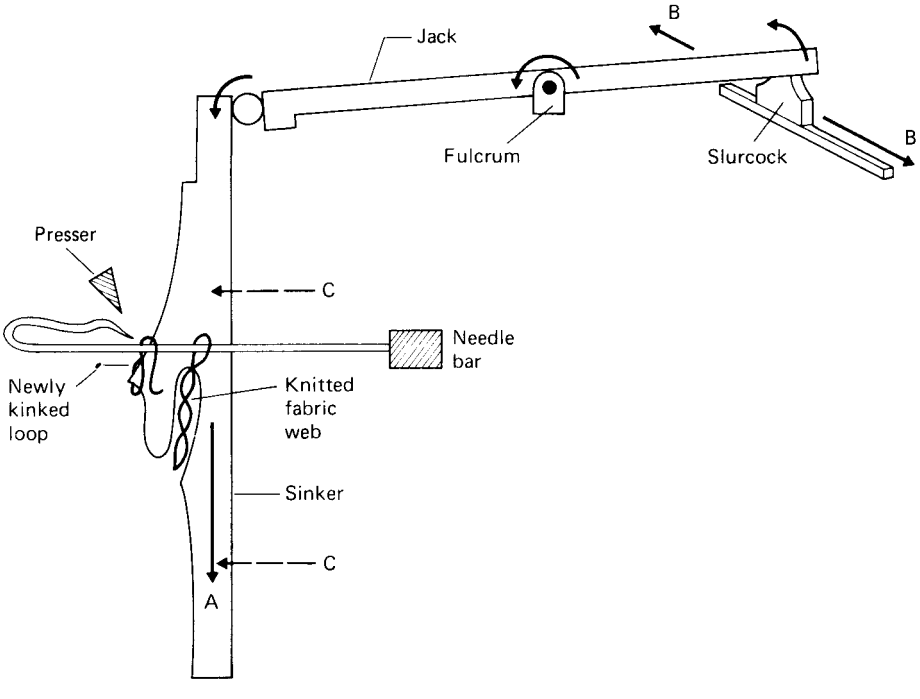

Fig. 2.3 The action of frame knitting.

Skechers EX1050
Skechers v Nike

(in direction A) individually between each pair of adjacent needles to kink or sink it into a loop shape around each needle stem. Each sinker is caused to descend because it is hinged at its upper end to a pivoted jack that is lifted at its outer end by a wedge-shaped piece of iron termed a *slurcock*.

The slurcock is traversed backwards and forwards (direction B) across the needle bed width by a rope. A forward motion of the sinkers (in direction C) takes the new loops under the beards. The beard is then closed by the presser bar.

Figure 2.4 shows a general view of the hand frame. There are three foot-pedals. After the weft yarn has been laid across, the right pedal is pressed down causing the rope attached to it to turn the wheel clockwise and draw the slurcock from left to

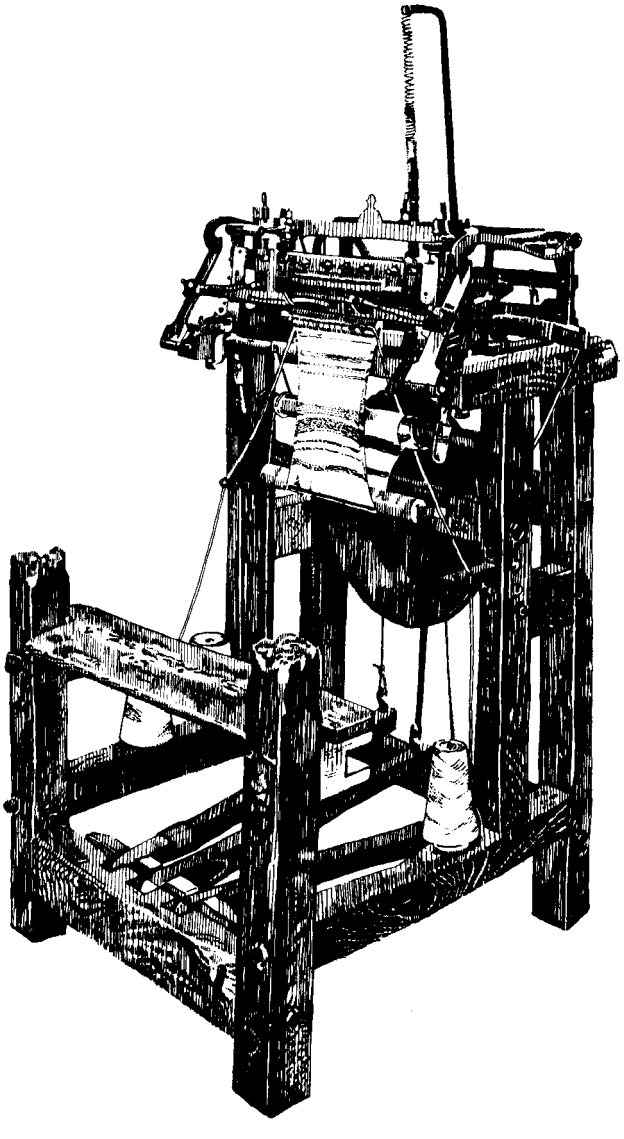

Fig. 2.4 Hand frame (c. 1820) [Copyright: Leicestershire Museums, Art Galleries and Record Service].

Skechers EX1050
Skechers v Nike

right. For the next row of loops, the slurcock is traversed across from right to left by pressing down the left foot-pedal after the yarn has been laid across. This turns the wheel in the opposite direction. The middle pedal causes the presser bar to be lowered to press and close the needle beards.

2.7 The evolution of other weft knitting machines

The fineness of the needles and sinkers relied heavily on the developing skills of English mechanics, a skill which was lacking on the continent of Europe at that time. Lee's original invention, although workable, was not economically viable as it required two men to operate it. Improvements were carried out and by 1620, *Aston*, a former apprentice of Lee's, had arranged the sinkers into alternating sets and thus, with skill and precision, had obtained better uniformity of loop length, much finer machine gauges (24 gauge) and easier operation of a frame consisting of 2000 parts.

The jack sinkers continued to be individually raised and lowered but the lead or dividing sinkers were afterwards moved down *en bloc* to equalise the loop lengths. The principle of sinkers and dividers is still employed on fine gauge Cotton's patent straight bar frames. Other improvements were trucks (wheels bearing the weight of the mechanism), sley castor backs and front stops.

These developments led to attempts to prevent the export of the improved British frames and to the growth of framework knitting in the second half of the seventeenth century, but a hundred years passed before further significant developments occurred. Strutt's *Derby Rib* attachment dates from 1759 (see Section 7.3). In 1769 the frame was successfully adapted to rotary drive (Section 17.1). It was not until the second half of the nineteenth century that vertical needle bars began to be employed or circular frames became viable (Section 8.4.3), despite earlier circular-machine patents ranging from Decroix's in 1798 to Brunel's in 1816.

It was the invention of Cotton's straight bar frame that automated the production of fashion shaped articles and developed the full potential of loop transfer shaping (Section 17.1).

Matthew Townsend's versatile latch needle (Section 3.14), however, mounted a challenge to the monopoly of the bearded needle frame and, with the later support of precision engineering techniques, it paved the way for electronically-controlled individual needle selection (Sections 11.13 and 12.6) on V-bed and circular machines.

2.8 The development of warp knitting

Warp knitting, the second and smaller section of machine knitting, was never a hand-manipulated craft. It was first developed by Crane and Porter in 1769 as a method of embroidery plating, by means of multiple warp thread guides, onto stocking fabric as it was being knitted on the hand frame.

As the technique improved, purely warp intermeshed loop structures without the weft knitted ground began to be knitted and *Crane* patented his warp loom in 1775. Tarrat is credited with developing the first efficient treadle-operated warp knitting frame in 1785. Two important later developments were *Dawson*'s wheels for shogging the guide bars, and *Brown*'s use of two separately-controlled, warp-supplied guide bars. In 1807, another Nottingham frame-smith, *S. Orgill*, introduced the

Skechers EX1050
Skechers v Nike

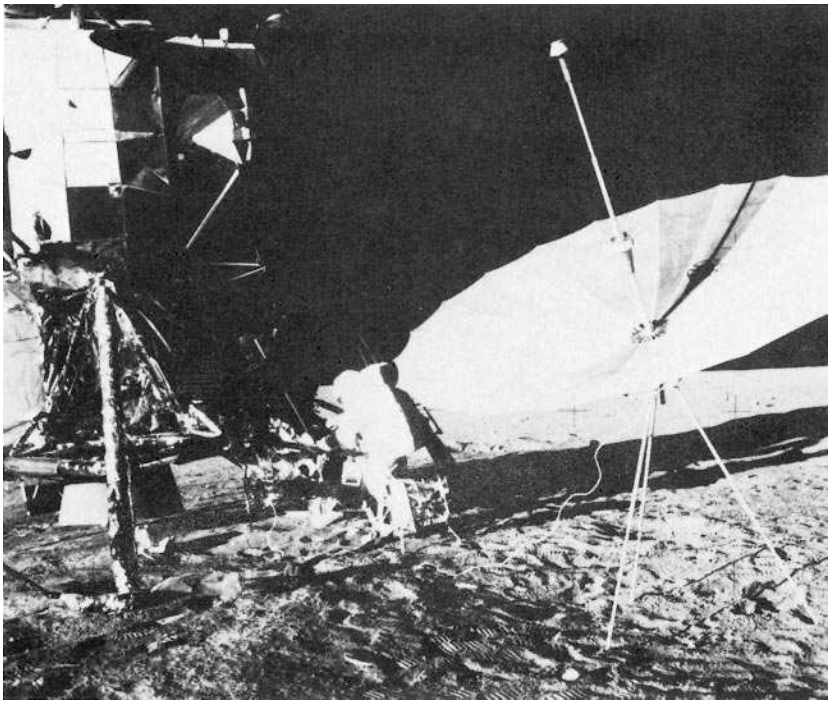

Fig. 2.5 Warp knitted fabric on the moon [Photo credit NASA]. The photograph, taken during the Apollo 12 mission, shows the warp knitted antenna which transmitted the television pictures of the lunar landing back to Earth. The two-bar mesh fabric, weighing less than one ounce per square yard, was warp knitted from gold plated metallic yarn. [*Knit O'wr Times*, July 7, 1969, 34–7].

rotary shaft driven knitting frame, having a width up to 72 inches (1.8 m) and cam-controlled knitting motions capable of knitting up to 30 rows (courses) of loops per minute.

The German warp knitting industry developed in Chemnitz and Apolda, after *Reichel* brought a British hand warp loom to Berlin in 1795.

During the Napoleonic wars, 500 hand warp looms were producing woollen uniform fabric for the British forces. However, the power-driven weaving loom was soon to out-produce the warp loom in plain fabric and, by the 1840s, the fancy lace market was lost to the patterning capabilities of the Leaver's lace machine.

The ingenuity of machine builders and warp knitters, and a combination of modern engineering technology and the advent of new yarns and finishing processes, have at last enabled warp knitting to realise the potential it first demonstrated in its early years of development (Fig. 2.5).

2.9 The potential of knitting technology

The unique loop structure of knitting provides opportunities for

- using a minimum number of yarns.
- easy flow of yarn from one loop to another under tension.
- varying the size of loops.

Skechers EX1050
Skechers v Nike

- loop distortion when under tension.
- loop transfer.
- knitting single face, double face, open-work and surface interest structures.
- increasing or decreasing the number of loops in width or depth.
- knitting to shape either fabric pieces or separate articles.
- knitting from a selection of yarns.
- engineering extensibility or stability.
- introducing (by inlay) yarns unsuitable for knitting.

2.10 Meeting the challenge of new markets

Today, knitting machines can manufacture most previously hand-knitted designs and structures in a fraction of the time as well as knitting structures that are too fine, intricate or complex to be attempted with hand-held pins. The manufacture of textiles is a highly competitive industry requiring the harnessing of the very latest technology to meet the instant demands of fashion and changing end-use requirements.

Fortunately the unique properties of knitted constructions, their ability to be engineered to exacting requirements and their potential for producing shaped articles as well as fabrics, enables knitting technology to rapidly respond to requirements in non-apparel areas whilst retaining its traditional markets in sweaters, hosiery, jersey and tricot fabrics, and raschel lace [9].

References

1. JOHNSON, J. DE, Antinoe and its papyri, *Jnl. Egypt. Arch.*, Vol. 1, (1914), 180.
2. RUTT, R., *A history of hand knitting*, Batsford, London, UK, (1987).
3. HARTLEY, M. and INGILBY, J., The old hand knitters of the Dales, *The Dalesman*, (1951), 2.
4. RUTT, R., Queen Elizabeth's stockings, *Knit. Int.*, (Feb. 1993), 51.
5. ANON., 1589 and all that and Birth of the stocking frame, *Knit. Int.*, (Jan. 1994), 66–8.
6. HARTE, N. Wm. Lee and the invention of the knitting frame, Four centuries of machine knitting, *Knit. Int.*, (1989), 14–20.
7. FELKIN, W. H., *History of the machine wrought hosiery and lace manufactures*, Longmans Green, London, UK, (1867), also David and Charles Reprints, (1967).
8. SCHMOLLER, G., *De Strassburger Tucher- und Weberzunft*, (1879).
9. MILLINGTON, J., Knitting technology looks to a 5th century, *ATA Journal*, (Feb./Mar. 2000), 28–30.

Further information

FARRELL, J., *Socks and stockings,* Batsford, London, UK, (1992).
HARVEY, M., 2000 years of hand knitting, *Knit. and Haberdashery Review*, (Oct. 1968), 10–11.
KIEWE, H. E., *The sacred history of knitting*, (1967), Art Needlework Industries Oxford, UK.
THIRSK, J., The hand knitting industry, four centuries of machine knitting, *Knit. Int.*, (1989), 9–13.
THOMAS M. E., *Mary Thomas's book of knitting*, (1943), Hodder and Stoughton, London, UK, (reprint 1968).

Articles on textile history

BRACEGIRDLE, R., *William Lee and the stocking frame*, Leicester Museums Information Sheet 18, (1979), Leicester, UK.

Skechers EX1050
Skechers v Nike

BURNHAM, D. K., Coptic knitting, An ancient technique, *Textile History*, (Dec. 1972), **3**, 116–24.
CHAPMAN, S. D., The genesis of the British hosiery industry 1600–1750, *Textile History*, (Dec. 1972), **3**, 7–50.
CHAPMAN, S. D., Enterprise and innovation in the British hosiery industry, *Textile History*, (Oct. 1974), **5**, 14–37.
EARNSHAW, P., *Lace machines and machine laces, Vols 1 and 2*, (1994–5), Gorse Publications, Guilford, UK.
GRASS, M. N., *Stockings for a queen*, (1967), Heinemann, London, UK.
HENSON G., *History of the framework knitters*, (1970), David and Charles Reprints, Nottingham, UK.
KERRIDGE, E., *Allied Trades textile manufacture in early modern England*, (Chapter 10), (1985), Manchester Univ. Press, Manchester, UK.
LEVEY, S. M., Illustrations of the history of knitting, *Textile History*, (1968), **1**, 183–205.
LEWIS, P., William Lee's stocking frame, *Textile History*, (1986), **17**, (2), 129–49.
PASOLD, E. W., In search of William Lee, *Textile History*, (1975), **6**, 7–17.
PASOLD, E. W., *Ladybird, ladybird*, (1977), Manchester Univ. Press, Manchester, UK.
PONTING, K. G., In search of William Lee, (1978), *Textile History*, **9**, 174–5, also *Knit. Int.*, (Dec. 1983), 79–83.
ROWLANDS, A., Machine knitted outerwear for adults, (1850–1939), *Knit. Int.*, (March 1985), 29–31.
RUDDINGTON, Making the past come alive, *Knit, Int.,* (Jan. 1982), 28–30.
TURNAU, I. and PONTING, K. G., Knitted masterpieces, *Textile History*, (1976), **7**, 7–23.
TURNER, J, D., The origins and development of the weft knitting industry, *Text. Inst. and Ind.,* (1966), **4**, (9), 265–8.
VARLEY, D. E., John Heathcoat (1783–1861), Founder of the machine lace industry, *Textile History*, (1968), **1**, 2–45.
ANON., The history of knitting (a series of illustrated advertisements produced by Groz-Beckert), *Knit. Times*, (15 Sept. 1975)

Old textbooks

QUILTER, J. B., and CHAMBERLAIN, J., Framework knitting and hosiery, *Hos. Trade J.*, (1911–1914), **1**, **2**, **3**.
SHINN, W. E., *Principles of Knitting*, Methuen, (1949), **1**, **2**.
WILLKOMM, C., *Technology of framework knitting*, translated from the German by W. T, Rowlett, (1885), Leicester Technical School, Leicester, UK, parts I, II.

Skechers EX1050
Skechers v Nike

3

General terms and principles of knitting technology

3.1 Machine knitting

Knitted structures are progressively built-up from row after row of intermeshed loops. The newly-fed yarn is converted into a new loop in each needle hook. The needle then draws the new loop head first through the old (fabric) loop, which it has retained from the previous knitting cycle. The needles, at the same time, release, (*cast-off* or *knock-over*) the old loops so that they hang suspended by their heads from the feet of the new loops whose heads are still held in the hooks of the needles.

A cohesive knitted loop structure is thus produced by a combination of the intermeshed needle loops and yarn that passes from needle loop to needle loop.

3.2 The knitted loop structure

The knitted loop structure may not always be noticeable because of the effect of structural fineness, fabric distortion, additional pattern threads or the masking effect of finishing processes. However, unless the intermeshing of the loops is securely achieved by the needles receiving new loops of yarn into their hooks before the old loops are 'cast-off', and the ground structure is not fractured during finishing or wear, a breakdown or separation of the structure will result.

The properties of a knitted structure are largely determined by the interdependence of each stitch to its neighbours on either side and above and below it.

Knitted loops are arranged in rows, roughly equivalent to the weft and warp of woven structures. These are termed '*courses*' and '*wales*' respectively.

3.3 A course

A *course* is a predominantly horizontal row of needle loops (in an upright fabric as knitted) produced by adjacent needles during the same knitting cycle. (The

Skechers EX1050
Skechers v Nike

last five words help to prevent confusion when describing complex weft knitted fabrics).

3.3.1 A course length

In weft knitted fabrics (with the exception of structures such as jacquard, intarsia and warp insertion), a course of loops is composed of a single length of yarn termed *a course length*. Weft knitted structures will *unrove* from the course knitted last unless it is secured, for example, by binding-off.

3.3.2 A pattern row

A *pattern row* is a horizontal row of needle loops produced by adjacent needles in one needle bed. In plain weft knitted fabric this is identical to a course but in more complex fabrics a pattern row may be composed of two or more course lengths. In warp knitting, every loop in a course is usually composed of a separate yarn.

3.4 A wale

A *wale* is a predominantly vertical column of intermeshed needle loops generally produced by the same needle knitting at successive (not necessarily all) knitting cycles. A wale commences as soon as an empty needle starts to knit.

- When loop transfer occurs it is possible to transfer a wale of loops from one needle A to another B and to recommence knitting with the second needle, in which case more than one needle will have produced intermeshed loops in the same wale. (If needle B knits continuously, the wale knitted by needle A will merge into it).
- In warp knitting a wale can be produced from the same yarn if the same warp guide laps the same needle at successive knitting cycles.
- Wales are connected together across the width of the fabric by sinker loops (weft knitting) or underlaps (warp knitting).
- Wales show most clearly on the technical face and courses on the technical back of single needle bed fabric.

3.5 Stitch density

Stitch density refers to the total number of loops in a measured area of fabric and not to the length of yarn in a loop (*stitch length*). It is the total number of needle loops in a given area (such as a square inch, or three square centimetres). The figure is obtained by counting the number of courses or pattern rows in one inch (or three centimetres) and the number of wales in one inch (or three centimetres), then multiplying the number of courses by the number of wales. (Using a measurement of three centimetres rather than one, is preferable for accuracy in counting).

Stitch density gives a more accurate measurement than does a linear measurement of only courses or only wales. Tension acting in one direction might produce

Skechers EX1050
Skechers v Nike

a low reading for the courses and a high reading for the wales; when they are multiplied together this effect is cancelled out. Pattern rows rather than courses may be counted when they are composed of a constant number of courses.

3.6 Technically upright

A knitted fabric is *technically upright* when its courses run horizontally and its wales run vertically, with the heads of the needle loops facing towards the top of the fabric and the course knitted first situated at the bottom of the fabric.

3.7 Design appearance requirements

The terms *technical face*, *technical back*, and *upright* are purely technically descriptive terms. They do not necessarily indicate the orientation of the fabric from the designer's viewpoint.

For example:

- Socks and ladies hosiery are usually worn upside-down compared to their sequence of production.
- The technical back of structures is often used for *plush* and *pile* effects.
- Curtains may be hung sideways compared to the wales.
- Diagonal stripes may be achieved for dress-wear by cutting the fabric at an angle.

3.8 The main features of the knitting machine

Originally, the term '*machine*' used to refer to a mechanism on a bearded needle frame such as the fashioning mechanism on the straight bar frame. Today, it refers to the complete assembly.

A *knitting machine* is thus an apparatus for applying mechanical movement, either hand or power derived, to primary knitting elements, in order to convert yarn into knitted loop structures.

The machine incorporates and co-ordinates the action of a number of mechanisms and devices, each performing specific functions that contribute towards the efficiency of the knitting action.

The main features of a knitting machine (see Fig. 13.12) are as follows:

1 *The frame* or *carcass*, normally free standing and either circular or rectilinear according to needle bed shape, provides the support for the majority of the machine's mechanisms.
2 *The machine control* and *drive system* co-ordinates the power for the drive of the devices and mechanisms.
3 *The yarn supply* consists of the yarn package or beam accommodation, tensioning devices, yarn feed control and yarn feed carriers or guides.
4 *The knitting system* includes the knitting elements, their housing, drive and control, as well as associated pattern selection and garment-length control device (if equipped).

Skechers EX1050
Skechers v Nike

5 *The fabric take-away mechanism* includes fabric tensioning, wind-up and accommodation devices.
6 *The quality control system* includes stop motions, fault detectors, automatic oilers and lint removal systems.

Machines may range from high-production, limited-capability models to versatile, multi-purpose models having extensive patterning capabilities. The more complex the structure being knitted, the lower the knitting speed and efficiency. The simplest of the knitting machines would be hand-powered and manipulated whereas power-driven machines may be fully automatically-programmed and controlled from a computer system.

3.9 The needle

The hooked metal needle is the principal knitting element of the knitting machine.

Prior to yarn feeding, the needle is raised to clear the old loop from the hook and to receive the new loop above it on the needle stem. The new loop is then enclosed in the needle hook as the needle starts to descend. The hook then draws the new loop down through the old loop as the latter slides over the outside of the descending bridge of the closed hook. All needles must therefore have some method of closing the needle hook to retain the new loop and exclude the old loop.

3.10 Fabric draw-off

The fabric loops are always drawn from the needles on the side remote from their hooks. When two sets of needles are employed, either arranged vertically back-to-back or at some other angle to each other, each set of hooks will face away from the other set and the fabric will be produced and drawn away in the gap between the two sets.

3.11 The front of rectilinear needle bar machines

All rectilinear needle bar machines have a front and a back. The front of the machine is the side to which the fabric is drawn away, removed and inspected during knitting.

If the machine has a single vertical needle bar, its hooks will face towards the back. If the machine has two vertical needle bars, the fabric will be drawn down between them and will then pass underneath one needle bar (the front bar) and will be removed from that side of the machine.

On warp knitting machines, the guide bars and their corresponding warp beams are numbered and described according to their position in relation to the front and back of the machine.

On circular machines, there is no front or back as the fabric is drawn towards the centre, usually below the needle circle. The cylinder face loops show on the outside of the fabric tube as it is drawn downwards during knitting.

Skechers EX1050
Skechers v Nike

3.12 The basic knitting action of a needle

Figure 3.1 (1–7) illustrates the basic action of a needle. Except for the manner in which the hook is closed (in this case by pressing the beard), the knitting action is similar for all needles. The arrows indicate the relative movement of the loops along the needles. (Whether the needle moves through the loops or the loops are moved over the needle by some other elements depends upon the machine design.)

1 The needle is in the (so-called) *rest position*, with the previously formed loop (a) held on its stem and covered by the hook.
2 The loop is *cleared* from the needle hook to a lower position on the needle stem.
3 The new yarn (b) is *fed* to the needle hook at a higher position on the needle stem than the position of the previous ('old') loop.
4 The yarn is *formed* into a 'new' loop.
5 The hook is *closed*, enclosing the new loop and excluding and *landing* the old loop onto the outside of the closed hook.
6 The new loop (b) is *drawn through* the head of the old loop (a). Simultaneously the old loop slides off the closed hook of the needle and is *cast-off* or *knocked-over*.
7 The old loop now hangs from the feet of the fully formed new loop and the knitting cycle starts again.

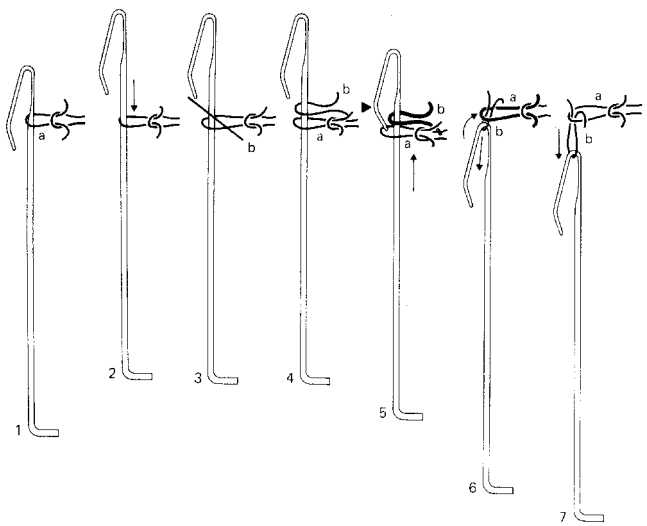

Fig. 3.1 Basic knitting action of a needle.

3.13 The bearded needle

As mentioned previously (Section 2.5), the *bearded* or *spring needle* was the first type of needle to be produced. It is the cheapest and simplest type to manufacture as it is made from a single piece of metal, in machine gauges as fine as 60 needles per inch, with the needles being pliered to ensure accurate needle spacing.

The bearded needle is essentially a *frame needle*, the needles being fixed to move

Skechers EX1050
Skechers v Nike

collectively with the straight needle bar or being attached to a circular frame and revolving with it.

When bearded needles are reciprocated in their bed, the action is a collective one because of the problems of individual pressing and needle movement. The serial action of weft knitting is thus achieved by other loop-forming and controlling knitting elements that form the yarn into new loops and may (on sinker wheel and loop wheel frames) move the loops along the needle stems. A knitting section occupies a considerable amount of space on bearded needle circular machines, thus limiting productivity. Selective beard pressing facilities used to be provided on some weft and warp knitting machines.

In weft knitting, accurate control of the loops throughout the knitting sequence made the bearded needle *sinker wheel* and *loop wheel* frames particularly suitable for the production of plush and inlay, whilst the ease of flexing and deflection of the bearded needle made the sinker wheel and straight bar frames useful for loop transfer effects. However, bearded needle technology was unable to meet the challenging requirements of modern knitting machinery, such as individual needle selection of stitches, use of two needle beds and high productivity. Once fine-gauge latch needle machines could knit, to a consistently high quality, structures that were previously only knitted on bearded needle machines, the latter were no longer competitive.

3.13.1 The main parts of the bearded needle

There are five main parts of the bearded needle (Fig. 3.2):

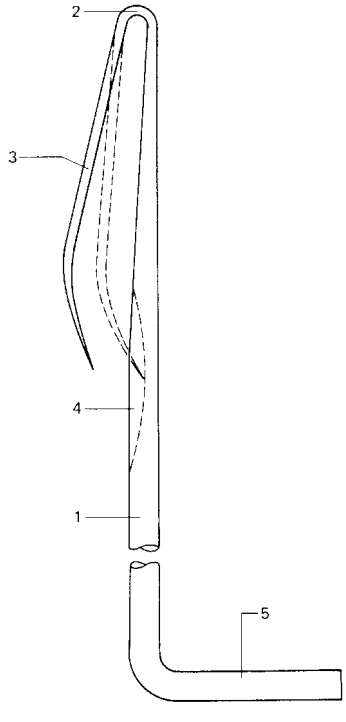

Fig. 3.2 Main parts of the bearded needle.

Skechers EX1050
Skechers v Nike

1 The *stem*, around which the needle loop is formed.
2 The *head*, where the stem is turned into a hook to draw the new loop through the old loop.
3 The *beard*, which is the curved downwards continuation of the hook that is used to separate the trapped new loop inside from the old loop as it slides off the needle beard.
4 The *eye*, or groove, cut in the stem to receive the pointed tip of the beard when it is pressed, thus enclosing the new loop.
5 The *shank*, which may be bent for individual location in the machine or cast with others in a metal 'lead'.

3.13.2 The knitting action of the bearded needle

The knitting action of the bearded needle has been illustrated in Fig. 3.1. Depending upon the machine, the needles are set vertically or horizontally. The needle has the disadvantage of requiring a pressing edge to close the bearded hook and enclose the new loop. The presser may be in the form of a bar, blade, verge or wheel, with either the presser or the needle remaining stationary whilst the other element moves towards it.

Another feature of bearded needle knitting is that individual loop formation has to be achieved by a *loop forming element*. This leads to a more complicated knitting action but also provides for a more gentle and careful loop formation.

3.14 The latch needle

3.14.1 The history and development of the latch needle

Fact and fiction envelopes the invention of the *latch needle* in a similar manner to that of the bearded needle. *Pierre Jeandeau* patented the first latch needle (also known as the *tumbler needle*) in 1806 but there is no evidence of its practical use [1,2]. There is also no evidence that the pivoting of a broken pocket knife blade led to the development of the latch spoon.

However, it was *Townsend* and *Moulden's* practical patents applying the use of this *self-acting* needle that, in 1849, began the challenge to the 260-year reign of the bearded needle.

Matthew Townsend was a Leicester fancy hosier who was searching for a simpler method of knitting purl fabrics than using a frame with two sets of bearded needles and pressers. Townsend not only realised that a latch needle, which dispensed with the need for a presser, could be employed in a double-headed form to knit purl, he also foresaw the use of single-headed latch needles in plain and rib circular machines, flat machines and single and double needle bar warp knitting machines, as well as the use of holding-down sinkers for single needle bed knitting.

Although the first needles were crude, a *Mr. D. Fitchett* used them to knit borders for cravats which he exhibited at the Great Exhibition of 1851. Townsend, who lacked engineering skill and financial backing, sold the rights of his latch needle to *Joseph Pool* of Leicester and *Hine Mundella* of Nottingham, and emigrated to Canton, Massachusetts in 1858. In 1865 he was successfully sued for infringing the American latch needle patent of *James Hibbert*, which pre-dated his own by a mere

Skechers EX1050
Skechers v Nike

month and four days. In his defence, Townsend stated that latch needles had been in use in France for many years, but he was unable to provide evidence. He died in 1879.

The latch needle was a more expensive and intricate needle to manufacture than the bearded needle. It was more prone to making needle lines as it slides in its trick, particularly if the latch was damaged or there was dirt in the trick. However, the latch needle was quickly employed by the newly emerging American knitting machine industry, whilst British companies preferred the bearded needle. The latter believed the bearded needle, which could be more precisely manufactured, had a knitting action which produced a better quality knitted structure.

It is now accepted that precision-manufactured latch needles can knit structures of the highest quality.

3.14.2 The features of the latch needle

The latch needle has nine main features (Fig. 3.3):

1 The *hook*, which draws and retains the new loop.
2 The *slot* or *saw cut*, which receives the latch-blade (not illustrated).
3 The *cheeks* or *slot walls*, which are either punched or riveted to fulcrum the latch-blade (not illustrated).
4 The *rivet*, which may be plain or threaded. This has been dispensed with on most plate metal needles, by pinching in the slot walls to retain the latch blade.
5 The *latch-blade*, which locates the latch in the needle.

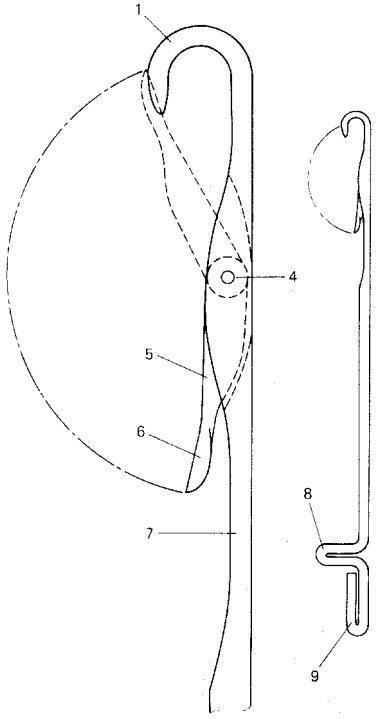

Fig. 3.3 Main features of the latch needle.

Skechers EX1050
Skechers v Nike

6 The *latch spoon*, which is an extension of the blade, and bridges the gap between the hook and the stem covering the hook when closed, as shown in broken lines.
7 The *stem*, which carries the loop in the clearing or rest position.
8 The *butt*, which enables the needle to be reciprocated when contacted by cam profiles on either side of it, forming a track. Double-ended purl type needles have a hook at each end; whilst one hook knits, the inactive hook is controlled as a butt by a cam-reciprocated element called a *slider*.
9 The *tail*, which is an extension below the butt, giving additional support to the needle and keeping the needle in its trick.

3.14.3 The knitting action of the latch needle

Figure 3.4 shows the position of a latch needle as it passes through the cam system, completing one knitting cycle or course as it moves up and in its trick or slot.

1 *The rest position*. The head of the needle hook is level with the top of the verge of the trick. The loop formed at the previous feeder is in the closed hook. It is prevented from rising as the needle rises, by *holding-down sinkers* or web holders that move forward between the needles to hold down the sinker loops.
2 *Latch opening.* As the needle butt passes up the incline of the clearing cam, the old loop, which is held down by the sinker, slides inside the hook and contacts the latch, turning and opening it.
3 *Clearing height*. When the needle reaches the top of the cam, the old loop is cleared from the hook and latch spoon on to the stem. At this point the feeder guide plate acts as a guard to prevent the latch from closing the empty hook.
4 *Yarn feeding and latch closing*. The needle starts to descend the stitch cam so that its latch is below the verge, with the old loop moving under it. At this point the new yarn is fed through a hole in the feeder guide to the descending needle hook, as there is no danger of the yarn being fed below the latch. The old loop contacts the underside of the latch, causing it to close on to the hook.
5 *Knocking-over and loop length formation.* As the head of the needle descends below the top of the trick, the old loop slides off the needle and the new loop is drawn through it. The continued descent of the needle draws the loop length, which is approximately twice the distance the head of the needle descends, below the surface of the sinker or trick-plate supporting the sinker loop. The distance is determined by the depth setting of the stitch cam, which can be adjusted.

The *rest position* actually occurs between positions 1 and 2, when the open needle hook just protrudes above the needle trick verge. In this position, a feeder would be passed without the needle receiving a new loop and the old loop would not be cast off, so that a float stitch would be produced. The *tucking in the hook position* occurs between positions 2 and 3, when the needle can receive the new yarn but the old loop has not been cleared from the open latch.

The latch needle used on the *Stoll* CMS V-bed flat machine has a spring-loaded latch so that it fully opens and fully closes. Also, the latch spoon does not project beyond the needle head. Loops thus slide easily over the hook and latch, the yarn is less likely to be split, and there is greater security for the knitted loops.

NB: Although the above knitting action is described assuming the needle to be moving through the knitted loops, the movement is relative and the same effect can be achieved by moving the loops over a stationary needle. Similarly, the knock-over

Skechers EX1050
Skechers v Nike

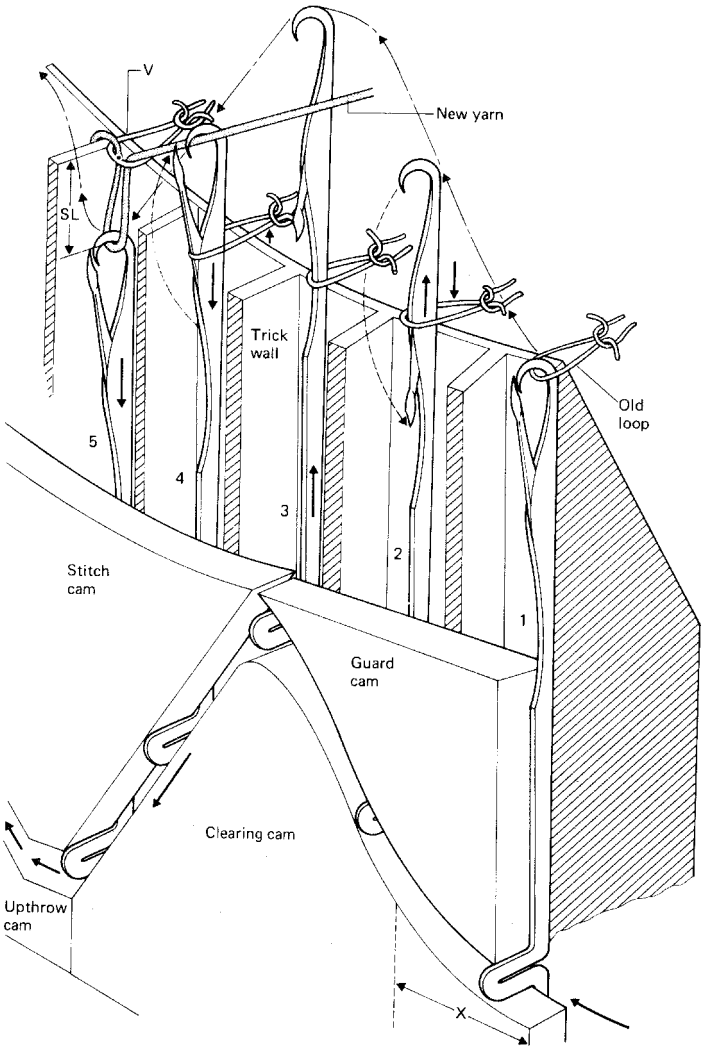

Fig. 3.4 Knitting action of the latch needle.

surface can be moved in opposition to the needle movement. (see *Relanit*, Chapter 13; and *Shima* contra sinkers, Chapter 19).

3.14.4 The advantages of the latch needle

The latch needle has the major advantage of being self-acting or loop-controlled, so that individual movement and control of the needle enables stitch selection to be achieved. It is ideally suited for use with computer-controlled electronic selection devices. For that reason, it is the most widely used needle in weft knitting and is sometimes termed the *'automatic' needle* (provided there are loops on the needle).

The old loop is cleared from the hook automatically when the needle is lifted because the loop slides down inside the hook and contacts the latch or tumbler,

Skechers EX1050
Skechers v Nike

causing it to pivot open allowing the loop to slide off the latch down onto the stem. The hook is closed automatically after yarn feeding by lowering the needle because the old loop, which was on the stem, slides upwards contacting and pivoting the latch tightly closed and drawing and enclosing the newly fed loop inside the hook.

Latch needles thus knit automatically as they are reciprocated and draw the length of the new loop as they descend to knock-over. Except in raschel warp knitting machines, they are arranged to move independently in their tricks or grooves. They can operate at any angle but often require a latch-guard or latch-opening facilities as there is a tendency for latches to spring closed as tightly-knitted loops are cleared from the open latches.

Individually moving latch needles can draw and form their own needle loops in succession across the needle bed, unlike bearded needles and needles in warp knitting machines which move as a unit and thus require sinkers or guides to form the loops around their stems. The Germans classify the first method as '*Strickerei*' or *loop drawing* and the second method as '*Wirkerei*' or *loop forming*.

Variation of the height of vertical reciprocation of a latch needle at a feeder can produce either missing, tucking or knitting, and depth of descent normally determines loop length. Specially designed latch needles are capable of facilitating rib loop transference by selective lifting to a height above clearing height. Double-ended purl needles can slide through the old loops in order to knit from an opposing bed and thus draw a loop from the opposite direction to the previously knitted loop.

3.15 Friction and frictionless needles

There are two types of latch needle – friction and frictionless. *Friction needles* have a slight flex, crimp or bend in the tails so that they contact the side-walls of the tricks in which they are housed. They are used in open-cam systems, where cams may be introduced or taken out of action to divert the needle path. *Frictionless needles* are employed in closed cam-tracks that have guard or safety cams on the opposite side to the knitting cams to produce a completely enclosed track, through which the needles run (otherwise the freely-moving needles would be thrown out of their tricks at high knitting speeds).

3.16 The bi-partite compound needle

Compound needles (Fig. 3.5) consist of two separately-controlled parts – the *open hook* and the *sliding closing element* (tongue, latch, piston, plunger). The two parts rise and fall as a single unit but, at the top of the rise, the hook moves faster to open the hook and at the start of the fall the hook descends faster to close the hook. It is easier to drive the hooks and tongues collectively from two separate bars in warp knitting than to move each hook and tongue individually, as in weft knitting.

A compound needle with a sliding latch was first patented by *Jeacock* of Leicester in 1856. It now dominates the warp knitting industry after suffering a set-back against high-speed bearded needle machines in the 1960s. However, in weft knitting, where versatility and needle selection are as important as knitting speed, it has only made limited inroads in certain specialist or prototype areas.

Skechers EX1050
Skechers v Nike

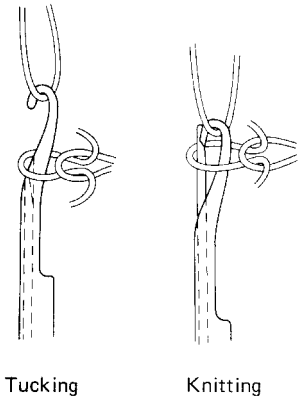

Fig. 3.5 Compound needle.

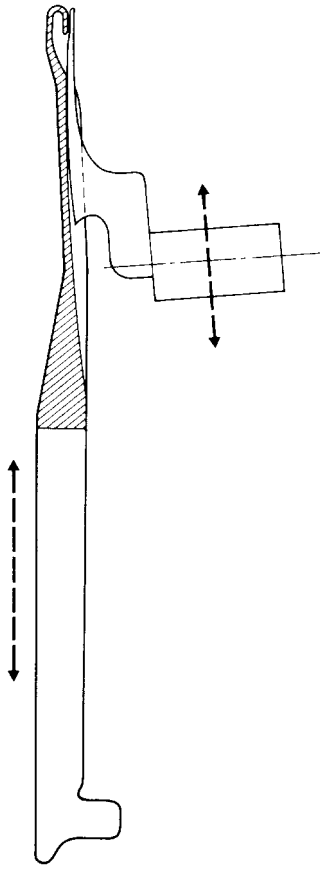

Fig. 3.6 Open-stem slide needle.

Two types of compound needle have been employed in warp knitting machines. *The tubular pipe needle* has its tongue sliding inside the tube of the open hook. It was successfully employed in *Sir James Morton's* high-speed *FNF tricot warp knitting machine* during the late 1940s and 50s. Development then ceased and bearded needle tricot machines recaptured their market with higher speeds, only to be later outpaced by a more efficient type of compound needle, *the slide compound needle*.

The *open-stem 'pusher type'* or *slide needle* (Fig. 3.6) has a closing wire or tongue that slides externally along a groove on the edge of the flat hook member. This needle is now preferred because it is simpler, cheaper, more compact and each of the two parts can be separately replaced.

3.17 A comparison of latch and compound needles

Compared with the latch needle, the compound needle is more intricate and expensive to manufacture. Each of its two parts must be separately and precisely controlled during knitting. In circular knitting, yarn feeding is very critical because, if the yarn lands on the tongue, it will not enter the open hook, whereas in latch needle

Skechers EX1050
Skechers v Nike

knitting the closing latch will flick the yarn into the hook. It is particularly a problem when knitting multiple tucks. Adjustment of a machine setting is therefore a very skilled operation. Lifting of the tongue out of its guide groove at high speeds or as the result of dirt or fly can also be a problem, particularly if it splits filament yarns. In addition, differential heat expansion between the hook and its closer can cause problems.

On the other hand, the vertical clearing height for the compound needle is not so high because only the open hook and not an open latch spoon has to be cleared. The shorter vertical stroke can be achieved with a smaller cam system in V-bed flat knitting.

Also, when clearing, the compact head of the compound needle does not cause stretching of needle loops and robbing of yarn from adjacent sinker loops as the needle rises to clear or descends to knock-over, as is the case with the latch needle. The needle can knit tight, uniform stitches that tend to be rounder than the long, narrow loops produced by latch needles.

The compound needle has a short, smooth, simple harmonic movement without latch and beard inertia problems, so there is less vibration. Also, there is no stress on needle loops to open and close latches. The hook of the compound needle does not have to withstand the shock of a latch spoon hitting it. It can therefore be tapered to a slimmer diameter, producing a larger area inside the hook that can accommodate thicker yarns. This is particularly useful in the case of fine gauge, V-bed flat machinery.

Its slim construction and short hook make it particularly suitable for knitting fine warp knitted structures at high speed. It can knit chain stitches without the loops rising up the needles, and its sturdy construction resists the deflection generated by elastic yarns or thick places in yarns. Accumulations of lint are pushed out of the hook by the action of the closing element.

It is now employed in all types of warp knitting machines apart from double needle bar raschels and raschel simplex machines. Horizontal yarn tension between front and back needle bars can cause the two sets of needle hooks to be drawn towards each other and away from contact with their hook-closing sliders.

The compound needle has not lived up to its earlier promise in circular weft knitting. It has failed to gain a foothold in hosiery and even in simple plain knit single jersey. *Vignoni* are now the only circular machine builder to continue to include it as an option.

In V-bed flat knitting, *Shima Seiki* are successfully employing an open-slot compound needle in their coarse gauge (3 to 5 gauge) V-bed flat machines, resulting in a more compact cam box and reduced width of machine. The needle has conventional knit, tuck, miss and rib loop transfer facilities. The closing element passes through a slot in the hook element to the back, so that the two elements are held in contact with each other. Stop ledges on the two elements engage so that, after a certain distance, the individual movement of the element is converted into a collective movement of the two elements together.

Shima Seiki also used compound needles in their prototype four needle bed model SWG-X *WholeGarment* machine because the four needle beds are so close to each other that there is no space for latches to turn-over. Shima, again employ compound needles in their *model FIRST* machine. These ascend during knitting to only half the height of latch needles. They have a uniquely designed hook closer whose leading-end shoulder can project across to receive or transfer a loop from a

Skechers EX1050
Skechers v Nike

needle in the opposite bed. This closing element also has a small cut-away section on its outward surface that can be used for retaining loops separately from those inside the hook. On the Shima machine, the slide needles are centre-mounted, minimising yarn stress and damage.

3.18 Machine gauge

Normally, all primary elements (those directly involved in the knitting action) in the same machine are set to the same gauge. It should be noted that the gauge is measured on one needle bed, so a machine of the same gauge but with two needle beds will have a total of twice as many needles as a machine with one bed. The gauge measured at the point of needle location is the same as that at the point of loop formation.

The *pitch*, or distance between one needle and another, is proportional to the needle gauge or thickness. The space available, which determines the maximum thickness of the yarn (i.e. the yarn count) that may be knitted, is the gap between the side of the needle and the trick wall as the needle descends to draw a new loop.

Machine gauge can be calculated by dividing the total number of needles into the length of the needle bed. The figure is rounded to the nearest whole number. For example, a 4-inch diameter sock machine has 168 needles. The circumference of a circle is πd where $\pi = 22/7$ and d = the diameter. The circumference is therefore $4 \times 22/7 = 12.57$ inches. The gauge is 168/12.57 = approximately 14 needles per inch. This may be expressed as 'E 14', E being the number of needles per inch.

The diameter of a yarn is proportional to its count, so a relationship exists between the range of optimum counts of yarn that may be knitted on a particular machine and its gauge. Machine gauge thus influences choice of yarn count and affects fabric properties such as appearance and weight.

For a given machine diameter or width, finer gauge machines tend to knit a wider fabric because more wales are involved. Loop sizes will naturally be smaller so more courses of loops will be required per centimetre of fabric knitted and production rates in linear metres of fabric will be less than for a coarser gauge machine.

Also, with more and finer needles there is a higher machine cost and a greater potential for needle damage to occur. A 30-inch diameter single jersey circular machine might have 1716 needles in E 18 and 1872 in E 20.

Coarse gauge machines have needles with larger dimensions and larger needle movements. The knitting cam systems are correspondingly larger, so coarse gauge machines tend to have larger cam boxes and less feed systems around their cylinder than finer gauge machines. It can thus be assumed that machines at the coarse and fine ends of gauge ranges are more expensive to build and operate than machines in the middle of the gauge range.

Originally, needles were cast in small metal blocks termed *leads*, which were then fitted into a needle bar. In the bearded needle straight bar frame, needles were cast two to a lead and gauged in the number of leads per 3 inches of the needle bar, which is equivalent to a gauge of the number of needles in $1\frac{1}{2}$ inches. In bearded needle warp knitting machines, needles were cast three to a lead, giving a gauge directly in needles per inch. In the raschel warp knitting machine, the needles were cast in 2-inch leads giving a raschel gauge of needles per 2 inches. Latch needle weft knitting machines normally have a gauge expressed in needles per inch, which in

Skechers EX1050
Skechers v Nike

the USA is referred to as 'cut', being short for the phrase 'tricks cut per inch'. As mentioned previously, there is an increasing universal use of the symbol 'E' in warp and weft knitting – for example, raschel E 28 which is 28 needles per inch (25.4 mm). If two needle beds are employed (e.g. V-bed or double-jersey circular machines), the gauge is measured on one bed since the needles in the other bed are to the same gauge unless stated. Also, small diameter single- and double-cylinder hosiery machines have a gauge expressed in the form diameter multiplied by total number of needles, because the number of double-headed needles in a particular cylinder of the double-cylinder machine varies according to the rib set-out.

On some machines it is possible to change the needle beds and camming, and therefore the gauge. The extra spare parts can, however, cost about one third of the cost of a machine. It is also sometimes possible to employ finer or coarser needles than the machine gauge, thus producing finer or coarser knitted stitches. One well-known technique used on the V-bed flat machine is to *half-gauge* the needle bed by taking every other needle out of action. Thus a machine with 10 needles per inch would become twice as coarse, with only 5 needles per inch. Increasing or decreasing the number of ends of a particular count of yarn will also produce the appearance of a heavier or finer gauge.

References

1. ANON., Mystery of the latch needle finally solved, *Knit. Int.*, (Oct. 1998), 14, 15.
2. ANON., The changing picture of latch needle origins, *Knit. Int.*, (Oct. 1999), 23, 24.

Further information

ANON., 150 Years of the latch needle miracle, *Knit. Int.*, (Oct. 1997), 36–50.
ANON., Compound needles used in various types of knitting machines, *WST Knit. Tech.*, Vol. 4, (1982), No. 3, 190–2.
ANON., The compound needle: its background, *Knit. O'wr Times Yr. Bk.*, (1970), 110–12.
EVANS, R., 144-feed single knit compound needle machine, *Knit. Int.*, (May 1985), 42–3.
HURD, J. C. H. and MILLINGTON, J. T., The latch needle: Where do we go from here?, (*IFKT Paper*), *Knit. Int.*, (June 1979), 50–4.
LANCASHIRE, J. B., Counts and gauges, *Hos. Trade J.*, (Dec. 1958), 77–9.
LANCASHIRE, J. B. and KEATES, E. A., Knitting needles survey, *Hos. Trade J.*, (Aug. 1961), 98–100.
LANGENSTEIN, O., Developments and improvements in latch and compound needles, *Knit. Int.*, (Apr. 1986), 72–5.
MILLINGTON, J. T., Matthew Townsend. The secret history of the latch needle, *Knit. Int.*, (Feb. 1998), 38–9.
PEBERDY, T. and CHAMPAGNE, P., Self-acting compound needle, *Knit. Int.*, (April 1986), 59.
QUILTER, J. H. and CHAMBERLAIN, J., Matthew Townsend and the latch needle, *Framework Knitting and Hosiery Manufacture, Vol. 2*, Chapter 10, (Hos Trade J.), (1912), 1–7.
ROXBURGH, J., The compound needle: a developing element, *Knit. Times*, (12 May 1980), 64–71.
SHELTON, A., Matthew Townsend's latch needle, *Knit. Int.*, (March 1990), 68, 70, 73.
SPEETJENS, J. T., The impact of needle design on knitted fabric quality, (ASKT Paper), *Knit. Times*, (4 April 1977), 18–20.
SPENCER, D. J., Compound needles used in new v-bed flat machine, *Knit. Int.*, (Nov. 1987), 42–3.
TOWNSEND, T. A brief life history of Matthew Townsend, *Knit. Int.*, (April 1998), 34–5.

Skechers EX1050
Skechers v Nike

4

Basic mechanical principles of knitting technology

4.1 The sinker

The sinker is the second primary knitting element (the needle being the first). It is a thin metal plate with an individual or a collective action operating approximately at right angles from the hook side of the needle bed, between adjacent needles. It may perform one or more of the following functions, dependent upon the machine's knitting action and consequent sinker shape and movement:

Loop formation
Holding-down
Knocking-over

(It is always advisable to use one or more of the above terms as adjectives when referring to a sinker, in order to avoid confusion.)

On bearded needle weft knitting machines of the straight bar frame and sinker-wheel type (as on Lee's hand frame), the main purpose of a sinker is to *sink* or kink the newly laid yarn into a *loop* (Fig. 4.1) as its forward edge or catch (C) advances between the two adjacent needles. On the bearded needle loopwheel frame, the blades of burr wheels perform this function, whereas on latch needle weft knitting machines (Fig. 4.2) and warp knitting machines (Fig. 4.3), loop formation is not a function of the sinkers.

(NB: On the European mainland, particularly in Germany, the term *couliering* is used to describe the presentation of a yarn, the kinking of it into a needle loop and the knock-over of the old loop. Also the term 'sinker' often refers confusingly to a jack or other element (that can be sunk into a trick so that its butt is no longer in action.)

The *second* and more common function of sinkers on modern machines is *to hold down the old loops* at a lower level on the needle stems than the new loops that are being formed, and to prevent the old loops from being lifted as the needles rise to clear them from their hooks.

In Fig. 4.1, the protruding *nib* or *nose* of' sinker (N) is positioned over the sinker

Skechers EX1050
Skechers v Nike

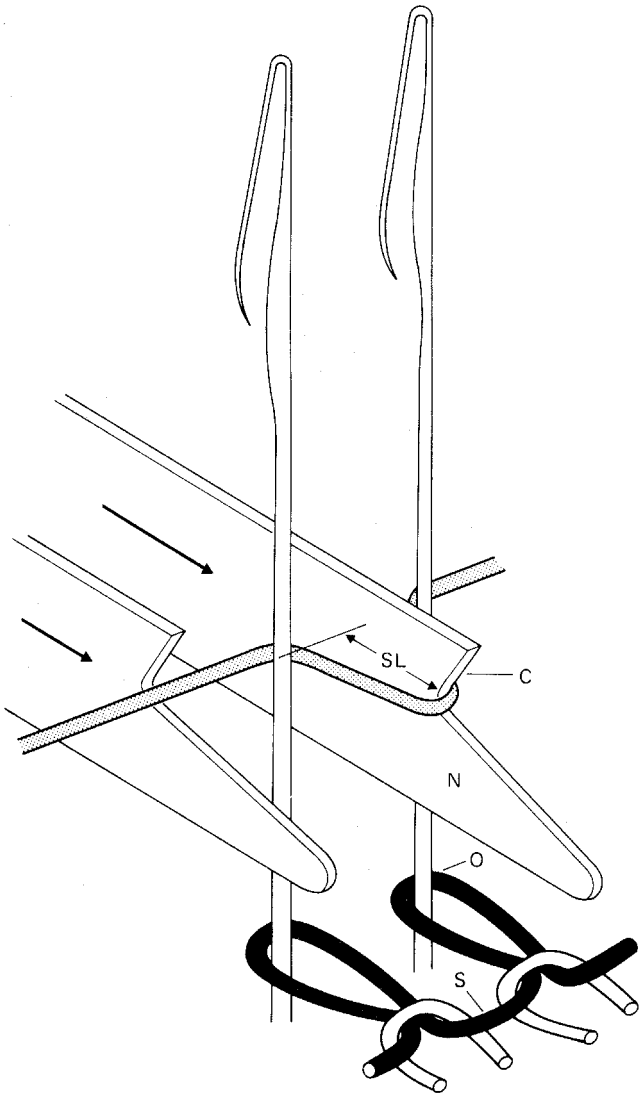

Fig. 4.1 Action of the loop-forming sinker.

loop of the old loop (O), preventing it from rising with the needle. On tricot warp knitting machines and single bed weft knitting machines, a *slot* or *throat* (T in Fig. 4.2) is cut to hold and control the old loop.

The sole function of' the sinker may be to act as a *web holder* or *stitch comb* as on the raschel warp knitting machine, in which case only the underside of the nose performs this function. On single cylinder latch needle weft knitting machines the holding-down sinkers have a rectangular gap cut into their upper surface, remote from the nose, into which the *sinker cam race* fits, to positively control the sinker's movement.

Holding-down sinkers enable tighter structures with improved appearance to be obtained, the minimum draw-off tension is reduced, higher knitting speeds are

Skechers EX1050
Skechers v Nike

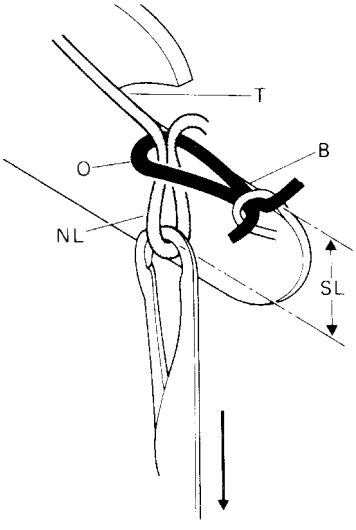

Fig. 4.2 Action of the knock-over sinker.

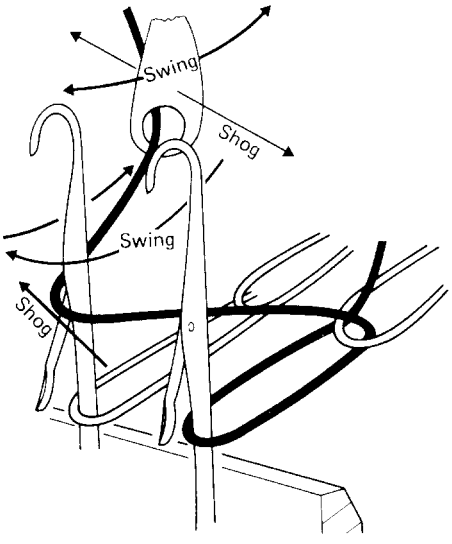

Fig. 4.3 Loop forming by warp guides.

possible and knitting can be commenced on empty needles. Holding-down sinkers are often unnecessary when knitting with two needle bed machines as the second bed restrains the fabric loops whilst the other set of needles moves. However, if single bed knitting or held loop structure is knitted, a form of holding-down element may still be required (as is the case with some V-bed flat knitting machines).

The *third function* of the sinker – as a *knock-over surface* – is illustrated in Fig. 4.2 where its upper surface or *belly* (B) supports the old loop (O) as the new loop (NL) is drawn through it. On tricot warp knitting machines the sinker belly is specially shaped to assist with *landing* as well as knock-over. On raschel warp knitting machines, many V-bed flats, and cylinder and dial circular machines, the verge or upper surface of the trick-plate (V in Fig. 3.4) serves as the knock-over surface.

On some machines, the knock-over surface moves in opposition to the descent of the needle (see *Relanit*, Chapter 13; and *Shima* contra sinkers, Chapter 19).

4.2 The jack

The jack is a secondary weft knitting element which may be used to provide versatility of latch needle selection and movement. It is placed below and in the same trick as the needle and has its own operating butt and cam system.

4.3 Cams

All needles have a reciprocating action either *en masse* or serially (except on now obsolete bearded needle sinkerwheel and loopwheel frames, where the circle of fixed bearded needles merely revolves). Cams are the devices which convert the rotary machine drive into a suitable reciprocating action for the needles and other elements. The cams are carefully profiled to produce precisely-timed movement and

Skechers EX1050
Skechers v Nike

dwell periods and are of two types, *engineering cams* and *knitting cams*. The movements may be represented in the form of a time-displacement graph.

4.3.1 Engineering cams

Circular engineering cams or high speed eccentrics control the motion of bars of elements which move *en masse* as single units in Cottons Patent and warp knitting machines. They are attached to a rotary drive shaft situated parallel to, and below, the needle bar. A number of identical cams are positioned along the shaft to ensure correctly aligned movement. The drive is transmitted and adapted via cam-followers, levers, pivots and rocker shafts. One complete 360-degree revolution of the drive shaft is equivalent to one knitting cycle, and it produces all the required movements of the elements in their correctly-timed relationship.

In warp knitting machines, four types of cam drive have been employed: single acting cams, cam and counter cam, box cams and contour cams. The first type requires a powerful spring to negatively retain the cam truck or follower in contact with the cam surface, where bounce and excessive wear occur at speed. The cam and counter cam arrangement provides a cam and its follower in each direction of movement, but is obviously more expensive to manufacture. The box or enclosed cam employs a single cam follower, which is guided by the two cam races of a groove on the face of the cam. However, change of contact from one face to the other causes the follower to turn in the opposite direction, producing wear which cannot be compensated. The contour, ring or pot cam is the reverse of the box cam as the cam profile projects out from one face of the cam in the form of a lip with a cam-follower placed on either side of it. This is a popular and easily adaptable arrangement. Although cams are comparatively cheap, simple and accurate, at speeds above 800 courses per minute they are subject to excessive vibration. For this reason, at speeds in excess of that, eccentric drive is now employed.

The *eccentric* is a form of crank which provides a simple harmonic movement with smooth acceleration and deceleration. Its widespread use is the result of adapting this simple motion and modifying it to the requirements of the warp knitting machine, so that even dwell (stationary periods) in the element cycle can be achieved. On the *FNF compound needle machine*, the movements of two eccentric drive shafts, one turning twice as fast as the other, were superimposed on each other. Now, however, the simpler, single eccentric drive is successfully driving element bars at speeds in excess of 3000 courses per minute.

4.3.2 Knitting cams

The other type of cam, the angular *knitting cam* (see Fig. 3.4), acts directly onto *the butts* of needles or other elements to produce individual or serial movement in the tricks of a latch needle weft knitting machine.

Two arrangements exist:

(a) Revolving cylinder machines – the needle butts pass through the stationary cam system and the fabric hanging from the needles revolves with them.

(b) Reciprocating cam-carriage flat machines or rotating cam-box circular machines – the cams with the yarn feeds pass across the stationary needle beds.

In weft knitting, the yarn feed position is fixed in relation to the cam system (Fig. 3.4). The yarn feed moves with or remains stationary with the cam system, as do the

Skechers EX1050
Skechers v Nike

yarn packages and tackle (except in the case of flat machines where the cam-carriage only reciprocates away from and towards the stationary yarn packages and does not revolve).

In the past, most *garment-length* knitwear and underwear machines have had revolving cam boxes because changes to the cam settings during the garment sequence can be initiated from a single control position as the cam-boxes pass by; also the garment lengths are stationary and may be inspected or removed whilst the machine is knitting. Now, most new electronically-controlled garment-length machines are of the revolving cylinder type as electronics have removed the need for the complex arrangement of rods and levers found, for example, on mechanically-controlled half-hose machines (Fig. 21.3.)

All hosiery machines and all fabric-producing machines are revolving cylinder machines because the weight of revolving multi-feeder yarn packages and tackle creates inertia problems that reduce efficiency and knitting speeds.

Knitting cams are attached, either individually or in unit form, to a cam-plate and, depending upon machine design, are fixed, exchangeable or adjustable. In the last case, on garment-length machines this might occur whilst the machine is in operation. Elements such as holding-down sinkers and pelerine (loop-transfer) points are controlled by their own arrangement of cams attached to a separate cam-plate.

At each yarn feed position there is a set of cams consisting of at least a raising cam, a stitch cam and an upthrow cam (Fig. 3.4.), whose combined effect is to cause a needle to carry out a knitting cycle if required. On circular machines there is a removable cam section or door so that knitting elements can be replaced.

The *raising cam* causes the needles to be lifted to either tuck, clearing, loop transfer or needle transfer height, depending upon machine design.

The *swing cam* is fulcrummed so that the butts will be unaffected when it is out of the track and it may also be swung into the track to raise the butts.

The *bolt cam* can be caused to descend into the cam track to control the element butts or be withdrawn out of action so that the butts pass undisturbed across its face; it is mostly used on garment-length machines to produce changes of rib set-outs.

The *stitch cam* controls the depth to which the needle descends, thus controlling the amount of yarn drawn into the needle loop; it also functions simultaneously as a *knock-over cam*.

The *upthrow* or counter cam takes the needles back to the rest position and allows the newly-formed loops to relax. The stitch cam is normally adjustable for different loop lengths and it may be attached to a slide together with the upthrow cam, so that the two are adjusted in unison. In Fig. 3.4 there is no separate upthrow cam; section X of the raising cam is acting as the upthrow cam.

The *guard cams* are often placed on the opposite side of the cam-race to limit the movement of the butts and to prevent needles from falling out of track.

Separate cam-boxes are required for each needle bed or associated element bed and they must be linked together or co-ordinated. If the cam-box itself is moving from right-to-left, the needle butts will pass through in a left-to-right direction.

On circular fabric machines, the cams are designed to act in only one direction, but on flat and circular leg-wear machines, the cams are symmetrically arranged to act in both directions of cam-box traverse, with only the leading edges of certain cams in action. All cam systems are a compromise between speed, variety, needle control and selection systems [1].

Skechers EX1050
Skechers v Nike

4.4 The two methods of yarn feeding

As mentioned in Section 4.3.2, yarn feeding involves either (a) moving the needles past the stationary yarn feed or (b) moving the yarn past the stationary needle bed.

When the yarn moves past the needles, the fabric will be stationary because the loops hang from the needles. This arrangement exists on all warp knitting machines, and on weft knitting machines with straight beds and circular machines with stationary cylinders and dials.

On straight machines of both weft and warp type, the yarn-carrier or guide has a reciprocating traversing movement that takes it towards and away from a suitably-placed yarn supply. On stationary cylinder and dial machines, however, the yarn supply packages must rotate in order to keep with the continuously revolving yarn feeds.

Because the latch needle beds of these flat and circular weft knitting machines are thus stationary, it is necessary to reciprocate the cam-carriage and revolve the cam-boxes so that the needle butts of the stationary tricks pass through. The needles are thus reciprocated to rise and receive the yarn at the exact moment when the traversing yarn feed is passing by (Fig. 4.4).

Most circular weft knitting machines have revolving needle cylinders and stationary cams, feeders and yarn packages. In this case, the fabric tube must revolve with the needles, as must the fabric rollers and take-up mechanism.

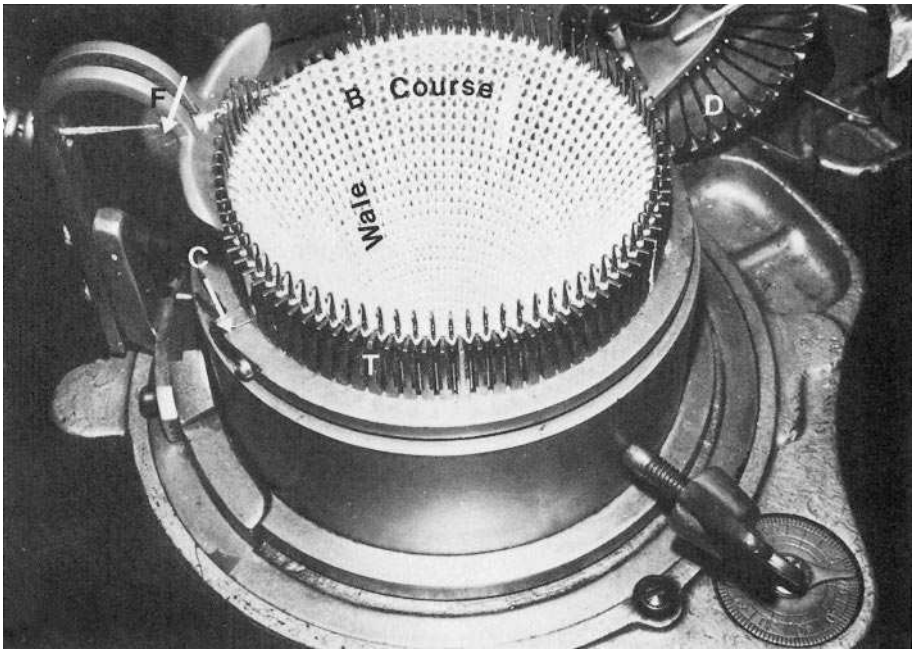

Fig. 4.4 Simple hand-turned Griswold type machine [Walter Bulwer, Leicestershire Polytechnic]. T = stationary needle tricks; C = revolving cam-box; F = revolving feeder; D = replaceable dial and needles; B = technical back of plain fabric.

Skechers EX1050
Skechers v Nike

4.5 The three methods of forming yarn into needle loops

There are three methods of forming the newly-fed yarn into the shape of a needle loop:

1 (Fig. 4.1) – by sinking the yarn into the space between adjacent needles using loop forming sinkers or other elements which approach from the beard side. The action of a straight bar frame is illustrated. (Other obsolete circular bearded needle machines such as the sinkerwheel and loopwheel frame employ the same technique.) The distance SL, which the catch of the sinker moves past the beard side of the needle, is approximately half the stitch length,
2 (Fig. 4.2) – by causing latch needles to draw their own needle loops down through the old loops as they descend, one at a time, down the stitch cam. This method is employed on all latch needle weft knitting machines. The distance SL that the head of the latch needle descends below the knock-over surface (in this case, the belly of the knock-over sinker) is approximately half the stitch length, and
3 (Fig. 4.3) – by causing a warp yarn guide to wrap the yarn loop around the needle.

The lapping movement of the guide is produced from the combination of two separate guide bar motions:

- A swinging motion which occurs between the needles from the front of the machine to the hook side and return.
- A lateral shogging (or racking) motion parallel to the needle bar on the hook side and also on the front of the machine.

The swinging motion is fixed, but the direction and extent of the shogging motion may or may not be varied from a pattern mechanism. This method is employed on all warp knitting machines and for wrap patterning on weft knitting machines (when a fixed wrapping movement is used). The length of yarn per stitch unit is generally determined by the rate of warp yarn feed.

Reference

1. FINDLAY, P. M., Machine capabilities in relation to quality standards. *Text. Inst. and Ind.*, (1977), 15, (5), 177–8.

Further information

BRUNNSCHWEILER, R. D., Present and future prospects for knitting and weaving. *J. Text. Inst.*, (1962), 610–27.
COOKE, W. D., Knitted fabrics from textured yarns. *Text. Inst. and Ind.*, (1977), 15, (3), 92–5.
CZELNY, K. T. J., The use of knitted fabrics in the automotive industry. *Text. Inst. and Ind.*, (1975), 13, (4), 103, 6, 7.
FORSYTH, J. C., The influence of weaving on other fabric forming techniques. *Text. Inst. and Ind.*, (1965), 3, (1), 8–11.
GOADBY, D. R., New developments using existing knitting machinery. *Knit. Int.*, (June 1976), 61–3.
GOTTLIEB, N., Warp knitting on the move. *Text. Int. and Ind.*, (1968), 6, (6), 150–2.
HURD, J. C. H., The increasing scope for knitted fabrics in apparel. *Text. Inst. and Ind.*, (1965), 3, (11), 1–3.
REISFELD, A., Classification of textile fabrics. *Knit. O'wr Times*. (26 Feb. 1968), 47–58.
SMITH, J. M., Continuing diversity of warp knit fabrics and applications. *Knit. Int.*, (Oct. 1977), 40–3.
THOMAS, D. G. B., Knitted industrial fabrics. *Text. Inst. and Ind.*, (1973), 11, (8), 213–15.
WHEATLEY, B., The principles of cam and eccentric drive systems for warp knitting machines. *Knit. Times*, (26 June 1972), 46–50.

Skechers EX1050
Skechers v Nike

5

Elements of knitted loop structure

5.1 The needle loop

The needle loop (H + L in Fig. 5.1) is the basic unit of knitted structure. When tension in the fabric is balanced and there is sufficient take-away tension during knitting, it is an upright noose formed in the needle hook. It consists of a *head* (H) *and two side limbs* or *legs* (L). At the base of each leg is a foot (F), which meshes through the head of the loop formed at the previous knitting cycle, usually by that needle. The yarn passes from the foot of one loop into the foot and leg of the next loop formed by it.

(NB: If the loop is the first loop knitted on that needle, its feet and legs will not be restricted and it will open out to give the appearance of a tuck loop. If the loops are knitted on a flat machine with a pressing down device and no take-down tension, the loops will be more rounded and will tend to incline due to the traversing movement of the presser.)

In warp knitting the feet may be *open* or *closed* at the base of the loop. In the latter case, the yarn guide has passed across the back of the needle across whose hook it has previously formed a loop.

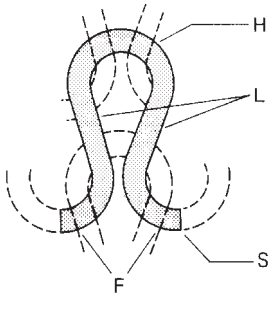

Fig. 5.1 Intermeshing points of a needle loop.

Skechers EX1050
Skechers v Nike

In weft knitting, the feet are normally open because the yarn continues to be supplied in one direction (except at the selvedges of straight knitting machines). Exceptionally, closed loops have occasionally been produced in the past on the bearded needle sinkerwheel machine, by twisting a loop over as it is transferred to another needle, or by using a twizzle beard which closes onto the back of the needle so that, as the loop is cast-off, it twists over itself.

5.2 The sinker loop

The sinker loop (S in Fig. 5.1) is the piece of yarn that joins one weft knitted needle loop to the next. On bearded needle weft knitting machines, *loop-forming sinkers* form the sinker loops in succession between the needles – hence the origin of the term sinker loop. On latch needle weft knitting machines, however, the sinker loops are automatically formed as the needles, in succession, draw their new loops.

Sinker loops show on the opposite side of the fabric to the needle loops because the needle loop is drawn onto the opposite side from which the yarn was originally fed. The terms 'sinker loop' and 'needle loop' are convenient descriptive terms but their precise limits within the same loop length are impossible to exactly define.

5.3 Warp knitted laps

Loops are termed '*laps*' in warp knitting because the warp guides lap their yarn around the needles in order to form the loop structure. The loops (overlaps) may be open or closed.

On the original warp frame (as on many present-day crochet machines), the needle bar was in a horizontal and not a vertical position, with its beards facing upwards (Fig. 5.2). To produce a needle loop it was thus necessary to swing the guide upwards and shog it over the needle hook; hence the term '*overlap*' which refers both to the movement and the loop which it forms. Similarly, the guide was shogged under the needles to a new starting position for the next overlap. This movement and the lapped thread it produces is still termed an '*underlap*'. In the warp knitting cycle, it is always understood that the overlap precedes the underlap.

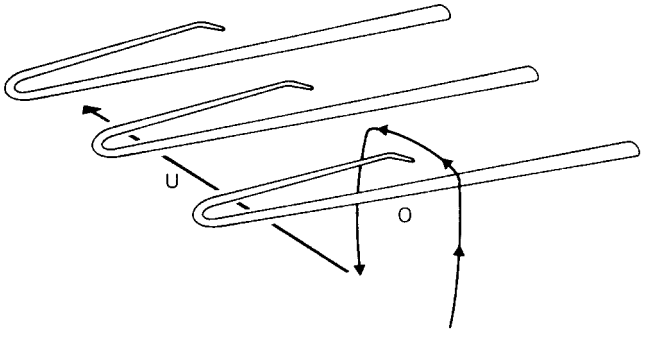

Fig. 5.2 Overlapping and underlapping (warp knitting).

Skechers EX1050
Skechers v Nike

5.4 The overlap

The *overlap* (Fig. 4.3) is a shog, usually across one needle hook, by a warp guide (at the back of a single needle bar machine) which forms the warp yarn into the head of a needle loop. Every needle on a conventional warp knitting machine must receive an overlapped loop from at least one guide at every knitting cycle, otherwise it will press-off the fabric.

The swinging movement of the guide to the hook side and the return swing after the overlap, produce the two side limbs of the loop which give a similar appearance on the face side of warp knitted fabric to a weft knitted needle loop.

Very rarely are overlap shogs across two needle hooks, as this produces severe tension on the warp yarn and knitting elements because the needles knock-over in unison and the needles are sharing yarns (unlike in single needle overlap warp knitted structures). Two needle overlaps also generally have a poor appearance and physical characteristics because the first overlap of the two will have a different configuration of underlap to that of the second. In the former, the underlap will be passing along the course to the second overlap in a similar manner to a sinker loop. However, the underlap from the second overlap will lap upwards to the next course in the manner of a normal underlap.

5.5 The underlap

The *underlap* shog occurs across the side of the needles remote from the hooks on the front of single-needle bar, and in the centre of double-needle bar, warp knitting machines. It supplies the warp yarn between one overlap and the next (Fig. 5.3). The underlap shog generally ranges from 0 to 3 needle spaces, but it might be 14 needle spaces or more depending upon the design of the machine and the fabric structure

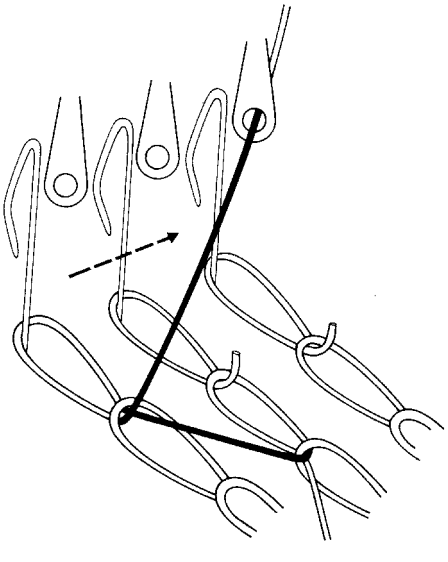

Fig. 5.3 The underlap shog.

Skechers EX1050
Skechers v Nike

(although efficiency and production speed will be correspondingly reduced with long underlaps).

Underlaps as well as overlaps are essential in warp knitted structures in order to join the wales of loops together but they may be contributed by different guide bars.

5.6 The closed lap

A *closed lap* is produced when a subsequent underlap shogs in the opposite direction to the preceding overlap, thus lapping the same yarn around the back as well as around the front of the needle (Fig. 5.4).

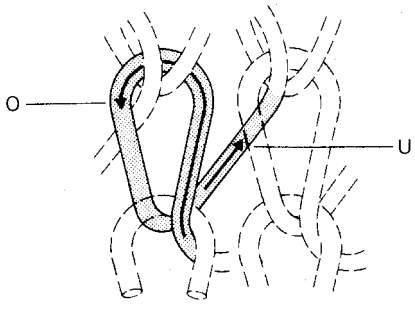

Fig. 5.4 The closed lap.

5.7 The open lap

An *open lap* is produced either when a subsequent underlap is in the same direction as the preceding overlap (Fig. 5.5) or an underlap is omitted so that the overlap of the next knitting cycle commences in the needle space where the previous overlap finished. Closed laps are heavier, more compact, more opaque, and less extensible than open laps produced from the same yarn at a comparable knitting quality.

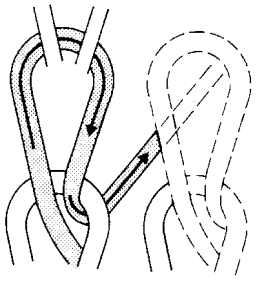

Fig. 5.5 The open lap.

Skechers EX1050
Skechers v Nike

5.8 Wrapping

Wrapping is a method of producing vertically-orientated patterning with warp threads on a single jersey weft knitted base structure. Specially controlled warp thread guides are used which make unidirectional warp knitted overlaps into selected needle hooks. If selected empty needle hooks rise to receive the warp yarn (as is the case on a few single jersey machines), *pure wrapping* or *warp insertion* is produced. If, however, wrapping takes place on needles, all of which already hold a ground yarn at that knitting cycle, *embroidery plating* or *wrap striping* is produced; this is a technique occasionally used on some half-hose machines.

5.9 The knitted stitch

The *knitted stitch* is the basic unit of intermeshing. It usually consists of three or more intermeshed needle loops (Fig. 5.6). The centre loop has been drawn through the head of the lower previously-formed loop and is, in turn, intermeshed through its head by the loop above it.

The *repeat unit* of a stitch is the minimum repeat of intermeshed loops that can be placed adjoining other repeat units in order to build up an unbroken sequence in width and depth.

A needle loop only has its characteristic appearance because its legs are prevented from spreading outwards by being intermeshed through the head of the loop below it. If there is no previous loop to mesh through, the legs of the new loop will spread outwards.

The term stitch is unfortunately sometimes used to refer to a single needle loop.

Stitch length is a length of yarn which includes the needle loop and half the sinker loop on either side of it. Generally, the larger the stitch length, the more extensible and lighter the fabric and the poorer the cover, opacity and bursting strength.

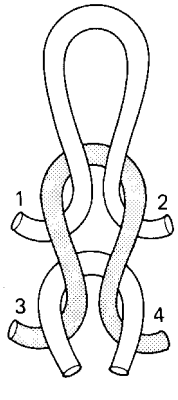

Fig. 5.6 The knitted stitch.

Skechers EX1050
Skechers v Nike

5.10 The intermeshing points of a needle loop

All needle loops or overlaps have four possible intermeshing points (Fig. 5.6) – 1 and 2 at the head, where the next new loop will be drawn through by the needle, and 3 and 4 at the base, where the loop has intermeshed with the head of the previously formed loop. The intermeshings at 1 and 2 are always identical with each other as are intermeshings 3 and 4 with each other. It is impossible to draw a new loop through the old loop so that its two feet are alternately intermeshed (Fig. 5.7). This could only be achieved by taking the yarn package through the old loop. Although this would produce a locked loop, the package used would not be large enough to provide a continuous supply.

A *new loop* can thus only be intermeshed through the head of the old loop in a manner that will show a face loop stitch on one side and a reverse loop stitch on the other side. This is because the needle hook is uni-directional and can only draw a new loop down through an old loop.

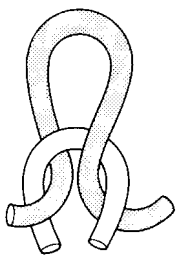

Fig. 5.7 An impossible intermeshing.

5.11 The face loop stitch

The *face side* of the stitch (Fig. 5.8) shows the new loop coming towards the viewer as it passes over and covers the head of the old loop. It is referred to as the *right side* in mainland Europe.

Face loop stitches tend to show the side limbs of the needle loops or overlaps as a series of interfitting 'V's. The face loop-side is the underside of the stitch on the needle.

5.12 The reverse loop stitch

This is the opposite side of the stitch to the face loop-side and shows the new loop meshing away from the viewer as it passes under the head of the old loop. It is referred to as the *left side* on the mainland of Europe. Reverse stitches show the sinker loops in weft knitting and the underlaps in warp knitting most prominently on the surface. The reverse loop side is the nearest to the head of the needle because the needle draws the new loop downwards through the old loop (Figures 4.4 and 5.8).

Skechers EX1050
Skechers v Nike

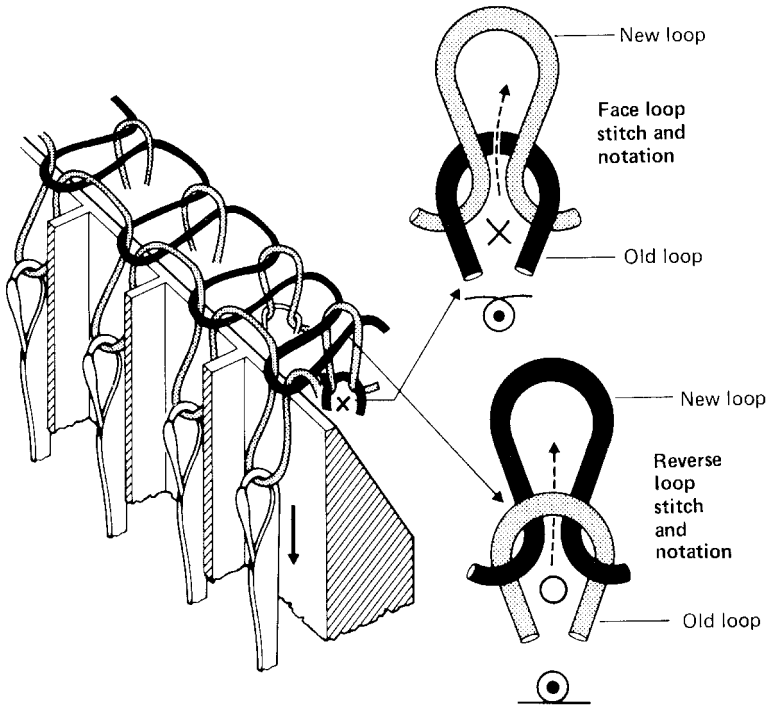

Fig. 5.8 Face- and reverse-meshed loops.

5.13 Single-faced structures

Single-faced structures are produced in warp and weft knitting by the needles (arranged in either a straight line or a circle, with their hooks facing outwards) operating as a single set. Adjacent needles will thus have their hooks facing towards the same direction and the heads of the needles will always draw the new loops downwards through the old loops in the same direction so that intermeshing points 1 and 2 will be identical with intermeshing points 3 and 4.

The under-surface of the fabric on the needles (termed the *technical face* or *right side*) will thus only show the face stitches in the form of the side limbs of the loops or overlaps as a series of interfitting 'V's. The upper surface of the fabric on the needles (termed the *technical back* or *left side*) will show reverse stitches in the form of sinker loops or underlaps as well as the heads of the loops.

5.14 Double-faced structures

Double-faced structures are produced in weft and warp knitting when two sets of independently-controlled needles are employed with the hooks of one set knitting or facing in the opposite direction to the other set. The two sets of needles thus draw their loops from the same yarn in opposite directions, so that the fabric, formed in the gap between the two sets, shows the face loops of one set on one side and the face loops of the other set on the opposite side.

The two faces of the fabric are held together by the sinker loops or underlaps,

Skechers EX1050
Skechers v Nike

which are inside the fabric so that the reverse stitches tend to be hidden. The two faces may be knitted from different yarns and the two fabrics thus formed may only occasionally be joined together. Sometimes the two faces are cohesively produced and are far enough apart for the connecting sinker loops or underlaps to be severed in order to produce two single-faced fabrics.

5.15 A balanced structure

A *balanced structure* is a double-faced structure that has an identical number of each type of stitch produced on each needle bed which therefore show on each fabric surface, usually in the same sequence. Balanced structures need not, however, have the same design in coloured yarn on either surface. Such structures do not normally show curling at their edges.

5.16 Face and reverse stitches in the same wale

Face and reverse stitches in the same wale are normally produced on purl weft knitting machines that have double-headed needles capable of drawing a face stitch with one hook and a reverse stitch with the other, so that intermeshing points 1 and 2 will not always be identical with intermeshing points 3 and 4. Transfer of a wale of loops from a needle knitting face loops to one knitting reverse loops (or vice-versa) will produce the same result.

5.17 Selvedged fabric

A *selvedged fabric* is one having a '*self-edge*' to it and can only be produced on a straight machine whose yarn carrier reciprocates backwards and forwards across the needle bed so that a selvedged edge is formed as the yarn rises up to the next course at either edge of the fabric.

5.18 Cut edge fabric

A *cut edge fabric* is usually produced by slitting open a tube of fabric knitted on a circular machine. A slit tube of fabric from a 30-inch (76 cm) diameter machine will have an open width of 94 inches (2.38 m) ($\pi\ d$) at knitting and before relaxation.

5.19 Tubular fabric

Tubular fabric may be produced in double-faced or single-faced structures on circular machines; or in a single-faced form on straight machines with two sets of needles, provided each needle set only knits at alternate cycles and the yarn only passes across from one needle bed to the other at the two selvedge needles at each end, thus closing the edges of the tube by joining together the two single-faced fabrics produced on each needle set.

Skechers EX1050
Skechers v Nike

Tubular double faced fabrics can be produced on straight machines with two sets of needles, needle bed racking and transfer facilities, provided empty complimentary needles are always available to receive and transfer loops.

5.20 Upright loop structures

Structures with upright loops in straight wales are produced only if the tension on the yarn on either side of the needle loop head is balanced. This condition often exists in weft knitted structures because balanced sinker loops enter from either side of the needle head, but it may be disturbed by racking, by knitting twist lively yarn or by traversing pressing-down elements.

Warp knitted structures, however, seldom have perfectly upright overlaps because the underlaps, even if they enter from either side of the overlap head, rarely balance each other. When closed laps are produced, both underlaps will be on one side of the previous overlap head, causing it to incline towards that direction. Even a progressive open lap will not produce a balanced loop structure, because the underlap entering the overlap head from below will not balance the effect of the underlap on the opposite side as it leaves for the course above.

Single guide bar fabrics are thus very unstable structures. This is one of the reasons why most warp knitted structures are produced from two or more sets of warp threads. Often the guide bars supply yarn to each needle but lap in opposite directions, so that the tensions of their underlaps tend to balance each other.

5.21 Knitting notations

A *knitting notation* is a simple, easily-understood, symbolic representation of a knitting repeat sequence and its resultant fabric structure that eliminates the need for time-consuming and possibly confusing sketches and written descriptions. Figure 5.8 gives the symbols used in the two types of notation system. A method universally recognised for warp knitting lapping diagrams and which is also popular for weft knitting running thread path notations requires the use of point paper.

Each point represents a needle in plan view from above and, after the thread path has been drawn, it also represents its stitch.

Each horizontal row of points thus represents adjacent needles during the same knitting cycle and the course produced by them.

The lowest row of points represents the starting course in knitting but it must be understood that, when analysing structures, the courses are normally unroved in a reverse order to the knitting sequence.

When knitting with a single set of needles, each vertical column of points represents the same needle at successive knitting cycles or a wale in the resultant structure. For double needle bar knitting, every second row represents the back needle bar and its wales with all needle hooks facing towards the top of the paper to facilitate the drawing of a continuous lapping movement. For weft knitting with two sets of needles, it is assumed that the lower row of points represent needles whose hooks face towards the bottom of the paper and the upper row, needles whose hooks face towards the top of the paper.

A second notation method is that developed by the Leicester School of Textiles

Skechers EX1050
Skechers v Nike

for weft knitting only. In this method squared paper instead of point paper is employed, with each square representing a needle or stitch. An 'X' symbol is placed in a square where a face stitch occurs and an 'O' where there is a reverse stitch.

When notating each stitch, it is necessary to examine the intermeshing direction *at the base of the loop* because the intermeshing at its head determines the direction of the intermeshing of the new loop formed above it.

Computer-aided design systems have their own methods of notation which may involve realistic appearance and the use of colour.

Skechers EX1050
Skechers v Nike

6

Comparison of weft and warp knitting

6.1 Yarn feeding and loop formation

In a *weft knitting* machine, even when the needles are fixed or are caused to act collectively, yarn feeding and loop formation will occur at each needle in succession across the needle bed during the same knitting cycle (Fig. 6.1). All, or a number of, the needles (A, B, C, D) are supplied in turn with the same weft yarn during the same knitting cycle so that the yarn path (in the form of a course length) will follow a course of the fabric passing through each needle loop knitted from it (E, F, G, H).

In a *warp knitting* machine there will be a simultaneous yarn-feeding and loop-forming action occurring at every needle in the needle bar during the same knitting cycle (Fig. 6.2). All needles (A, B, C, D) in the needle bar are simultaneously lapped

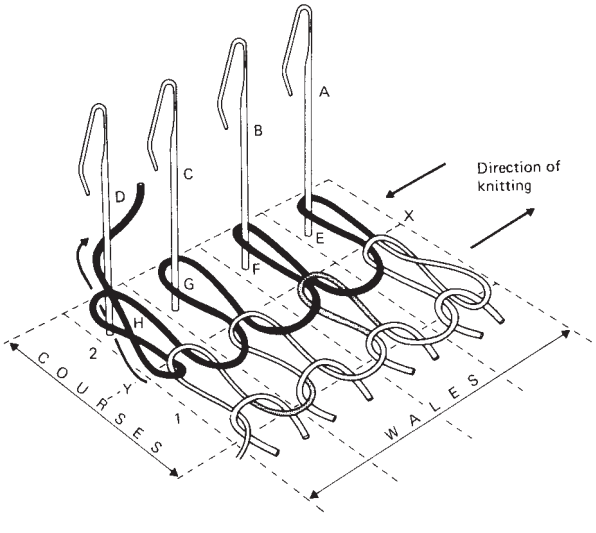

Fig. 6.1 Weft knitting.

Skechers EX1050
Skechers v Nike

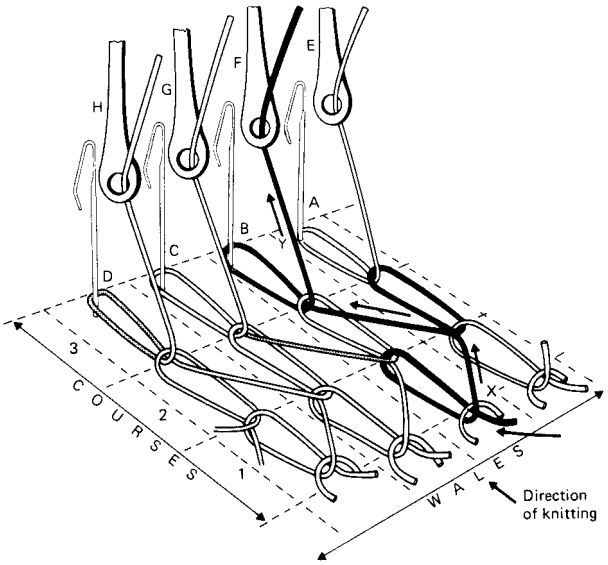

Fig. 6.2 Warp knitting.

by separate warp guides (E, F, G, H). As all needles receive their overlaps simultaneously, a guide underlapping from one needle to another will be passing from one knitting cycle or course to the next. Thus, the warp yarn passes from an overlap produced in one course to an overlap produced in the succeeding course (for example, guide F underlapping from needle B to needle A).

6.2 The two industries

Occasionally parts of both knitting techniques are combined in a single machine; generally, however, the techniques have tended to diverge to produce entirely separate industries each having its own specialist technology, machine builders, fabric characteristics and end-uses.

6.2.1 Weft knitting

Weft knitting is the more diverse, widely spread and larger of the two sectors, and accounts for approximately one quarter of the total yardage of apparel fabric compared with about one sixth for warp knitting. Weft knitting machines, particularly of the garment-length type, are attractive to small manufacturers because of their versatility, relatively low total capital costs, small floor space requirements, quick pattern and machine changing facilities, and the potential for short production runs and low stock-holding requirements of yarn and fabric.

A major part of the weft knitting industry is directly involved in the assembly of garments using operations, such as overlocking (Fig. 6.3), cup seaming (Fig. 6.4), and linking, that have been specifically developed to produce seams with compatible properties to those of weft knitted structures. There are, however, production units

Skechers EX1050
Skechers v Nike

Fig. 6.3 Overlock seaming [Corah].

Fig. 6.4 Cup-seaming.

that concentrate on the knitting of continuous lengths of weft knitted fabric for apparel, upholstery and furnishings, and certain industrial end-uses.

6.2.2 Warp knitting

Warp knitted fabric is knitted at a constant continuous width, although it is possible to knit a large number of narrow width fabrics within a needle bed width, usually separating them after finishing. There is considerable potential for changing fabric properties during the finishing process, as well as during knitting.

Skechers EX1050
Skechers v Nike

It is also possible to produce length sequences such as scarves with fringed ends, articles produced on double needle bar raschels based on the tubular knitting principle, and scalloped shaping of net designs by cutting around the outline after finishing.

British Celanese set the trend for the establishment of large, vertically-organized warp knitting plants self-sufficient in beaming, and in dyeing and finishing operations. During the 1930s they installed large plants with a total of 600 two-guide bar locknit machines, in order to convert their acetate and viscose rayon yarn into lingerie, shirting, blouse and dress fabrics. The much later introduction of continuous filament nylon and polyester yarn provided ideal raw materials for high-speed conversion into fine-gauge warp knitted fabrics.

From the mid 1950s, the patterning potential of multi-guide bar raschels has been progressively improved, based particularly on the conversion of nylon and polyester filament yarns. Thus, the lace and curtain net trade taken from warp knitting during the 1820s by twist, bobbinet and Leaver's lace machines has been extensively regained [1]. Warp knitting suffered in the swing of fashion away from continuous filament synthetic yarns towards blended spun yarns in solid fabrics, so there has been a tendency for the industry to seek new markets in household furnishings, car upholstery (Fig. 6.5) and industrial cloths.

Staple fibre spun yarns and textured continuous filament yarns create major difficulties for warp knitters. The precise setting of the elements, their fine gauge, the plating of two yarns in a needle hook, and the supply of parallel ends of yarn necessitate the use of fine and therefore expensive yarns. Problems can be caused by lint accumulation or filamentation, and the increased cross-sectional area caused by these seriously reduces the total length of warp yarn that can be accommodated on a specific warp beam flange diameter, thus increasing handling costs and machine down-time. For example, increasing the warp beam diameter from 21 to 40 inches (53 to 100 cm) enables the total length of accommodated warp to be quadrupled, but changing the yarn from 30 denier nylon to 150 denier textured polyester decreases the total length of accommodated warp ten-fold.

Fig. 6.5 Warp-knitted car upholstery [Karl Mayer].

Skechers EX1050
Skechers v Nike

6.3 Productivity

Productivity (P) is expressed in pattern rows per minute. In warp knitting this is the same as courses, but in weft knitting a pattern row may be composed of more than one course (feed).

In warp knitting, $P = R \times E$, where R is the number of camshaft revolutions per minute and E is the machine efficiency.

In weft knitting, $P = F \times R$ or $T \times (E/C)$, where F is the number of active yarn feeds, R or T the number of machine revolutions or cam-carriage traverses per minute, and C the number of courses or colours which comprise one pattern row.

6.4 Machine design

In warp knitting machines, all elements of the same type (needles or sinkers or guides of one guide bar) act as a single unit and are therefore fitted into, and controlled from, an element bar. Each guide in the same (conventional) guide bar requires the same warp-yarn feed rate and tension. This is most conveniently achieved by supplying a large number of parallel ends of warp yarn to the guide bar from a *warp beam*.

The shogging movement of the guide bars is controlled from one end of the machine. All these factors tend to restrict warp knitting machines to *rectilinear frames* and s*traight needle bars*.

In weft knitting machines there are only a limited number of yarn feed positions, often requiring different rates of yarn feed, so these are supplied from yarn packages such as cones. Since the needles knit in serial formation, the weft knitting machine frame may be arranged with either a circular or a straight needle bed, depending upon end-use requirements.

6.5 Comparison of patterning and fabric structures

Individual element movement (particularly of latch needles) enables weft knitting machines to produce designs and structures based upon needle selection for loop intermeshing and transfer. This also facilitates the production of garment parts shaped on the knitting machine. Weft knitted loops tend to distort easily under tension and yarn can freely flow from one loop to another that is under greater tension, a characteristic which aids form-fitting and elastic recovery properties (Figures 6.6, 6.7 and 6.8). Change of yarn by horizontal striping is another major weft knitting patterning technique.

Weft knitted structures can generally be unroved, a course at a time, from the end of the fabric knitted last and this, together with a tendency for loop breakdown to cause laddering, can create problems.

Most patterning on warp knitting machines is based on selective control over guide bar lapping movements (i.e. the direction and extent of the overlap and underlap movements) and on the threading of the individual guides of each guide bar (i.e. with or without warp threads or with different types or colours of yarn). Yarn change by striping is not available on warp threads.

Warp knitted threads tend to have an approximately vertical path through the

Skechers EX1050
Skechers v Nike

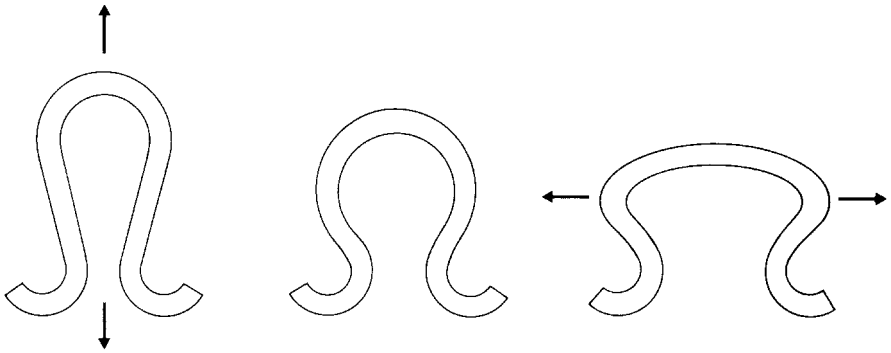

Fig. 6.6 Loop extension and recovery.

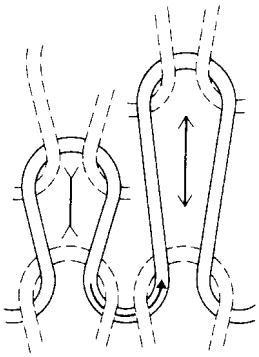

Fig. 6.7 Yarn flow in knitted structure.

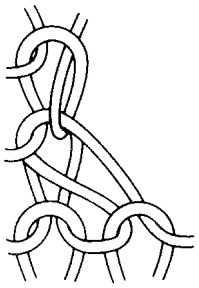

Fig. 6.8 Weft knitted loop transfer.

structure, which makes the warp threads less likely to fray or unrove and, in the absence of weft threads allows almost any width up to the full knitting width to be achieved. Effects in open work and colour can be obtained without the use of special mechanisms, and lapping movements can be arranged to produce fabrics ranging from dimensionally stable to highly elastic without necessarily changing the type of yarn.

6.6 Course length and run-in per rack

In weft knitting, the term '*course length*' refers to the measurement of a straight length of yarn knitted by all or a fraction of the needles in the production of a particular course. It consists of the stitch length multiplied by the number of needles knitting that stitch length. It may be measured at a yarn feed during knitting or after unroving the yarn from a knitted fabric, either as a complete course length or from the counted wales between two vertical cuts in the fabric. In Fig. 6.1, the length of black yarn between X and Y would be the course length.

In warp knitting, *run-in per rack* is equivalent to course length in weft knitting and is measured in inches or millimetres. All threads from the same warp are supplied from the same beam-shaft under identical conditions of yarn feed and tension,

Skechers EX1050
Skechers v Nike

so it is only necessary to measure the length of one representative runner from each warp. The *rack* is an internationally recognized unit of 480 courses or knitting cycles. For fabric weight calculations, the threading arrangement of each bar must also be taken into consideration.

The simplest method of measuring run-in is to divert one thread through two guide eyes so that it runs at right-angles to the rest of the warp sheet at that point. It is then marked and, after the machine has been run for 480 cam-shaft revolutions, the distance the mark has moved towards the needles is measured. The length of yarn in an average stitch unit can be calculated by dividing the run-in by 480.

In Fig. 6.2, the length of black warp thread between *X* and *Y* would be the run-in if the measurement was multiplied by 160, giving a total of 480 courses.

6.7 Fabric quality

The term fabric '*quality*' is sometimes used when referring to wales and courses per inch or centimetre, either in a knitted or a finished relaxed state. As knitted loops tend to assume a recognizable configuration, the results can give an indication of the approximate stitch length and possible machine gauge used in knitting the structure, provided the state of relaxation and type of structure is taken into consideration. Generally, the higher the figure for a given linear measurement of wales, the finer the machine gauge and the smaller the stitch length.

6.8 Structural modifications commonly used in weft and warp knitting

Certain techniques are possible during the knitting action that can radically change the physical appearance and properties of a knitted construction without seriously affecting the cohesive nature of the loop structure. These techniques may be broadly divided into four groups – laying-in, plating, open-work and plush/pile. Although these techniques can be achieved on most knitting machines, slight modifications are often necessary and the more sophisticated versions of these techniques may require specially-designed knitting machines.

6.8.1 Laying-in

Inlaid (or laid-in) *fabric* consists of a ground structure of knitted or overlapped (warp knitted) threads that hold in position other non-knitted threads which were incorporated (laid-in) into the structure during the same knitting cycle.

An inlaid yarn is never formed into a knitted loop, although in weft knitting, when using only one bed of needles, it is necessary to form the inlay yarn into occasional tuck stitches in order to hold it in the technical back of the structure.

When weft knitting with two sets of needles, or when overlapping on the front guide bar of a warp knitting machine, it is possible to introduce the inlaid yarn into the structure merely by supplying the yarn across the backs of the needles (the front of the machine) in order to trap the yarn in the fabric.

Inlaid yarns are trapped inside double needle bed fabrics by the loops or

Skechers EX1050
Skechers v Nike

overlaps; and towards the back of single needle bed fabrics by the sinker loops or underlaps.

Dependent upon the fabric construction and the types of yarns employed, laying-in may be used to modify one or more of the following properties of a knitted structure: stability, elastic stretch and recovery, handle, weight, surface 'interest', and visual appearance.

Laying-in offers the possibility of introducing fancy, unusual, and/or inferior or superior yarns whose physical properties such as thickness (linear density, count), low strength, irregular surface or cross-sectional area, elasticity or lack of elasticity render them difficult to knit into intermeshed loops. An inlay yarn may have a yarn count that is 6–8 times heavier than the optimum count for that machine type and gauge when operating under normal knitting conditions.

Laying-in yarn carriers or feeder guides may be of the conventional type or they may be specially designed for their function and the type of yarn; the ground yarn is knitted normally as for any structure. An inlay yarn normally assumes a relatively straight configuration, with hardly any reserve of yarn to distort or flow towards an area of the fabric under tension. It therefore requires less yarn than for knitted loops and tends to confer stability unless an elastomeric yarn is used, in which case the elastic stretch and recovery properties of the fabric will be improved.

6.8.2 Weft insertion

Weft insertion is a special type of laying-in where the yarn is laid onto special elements that, in turn, introduce it to the needles at the correct moment during the knitting cycle, instead of the yarn guide laying the yarn directly into the needles.

Although the possibility exists for introducing both weft and warp threads into either weft knitted or warp knitted fabrics during knitting, many attempts at this technique have failed to produce viable alternative structures as regards cost, design or end-use properties to effectively compete against woven structures [2–5].

In warp knitting, laying-in is achieved even on single needle bar machines by omitting the overlap movement and merely underlapping on the inlay guide bar. Provided the inlay guide bar is always behind a guide bar that is overlapping the front guide bar, overlaps and underlaps will trap the inlay underlaps into the technical back of the structure (Fig. 27.1).

When weft knitting with one set of needles, it is not possible to lay-in a yarn by merely traversing a yarn carrier across the backs of the needles because the yarn will not be trapped by the sinker loops of the knitted loops. The inlaid yarn must occasionally pass across the hooks of a needle to form a tuck stitch and thus hold itself into the structure.

6.8.3 Plating

A *plated structure* contains loops composed of two (or more) yarns, usually with differing physical properties. Each has been separately supplied through its own guide or guide hole to the needle hook, in order to influence its respective position relative to the surface (technical face and technical back of the fabric).

Plating (as an all-over effect or on selected stitches) may be used to produce surface interest, coloured patterns, open-work lace or to modify the wearing properties of the structure.

Skechers EX1050
Skechers v Nike

Perfect plating, so that the underneath yarn does not show or 'flash' onto the surface, is difficult to achieve with yarns that have a circular cross-section and variable physical properties. It is essential to control yarn tension, angle of feed and the already-formed loops throughout the whole knitting cycle. If the two yarns are of similar count, they should be approximately half the normal yarn count for that gauge of machine.

As the yarns slide along the underside of a normally-curved needle hook, they may roll over each other and thus destroy their plating relationship; for this reason, needles with specially shaped hooks for plating are often employed.

The basic rule of plating is that the yarn positioned nearest to the needle head shows on the reverse side of the needle loop and therefore shows on the surface of the technical back (Fig. 6.9). The second yarn is in a lower position and tends to show on the face stitches of weft- and warp-knitted structures (Figures 6.10 and 6.11). The second yarn will be prominent on the surface of face loops on both sides of rib fabrics unless it is tucked ('tuck plated') by the second set of needles. In purl fabrics, face stitches will show the second yarn and reverse stitches the first yarn.

In single jersey plating, the yarn for the technical back is fed at a low angle across the open latches from a hole drilled vertically in the feeder guide. The face yarn is fed at a sharp angle above it into the open hooks from a hole drilled horizontally into the side of the guide. As the latches close, the back yarn is lifted into the hook above the face yarn, thus ensuring the correct plating relationship in the fabric.

In tricot warp knitting, many fabrics are knitted where two guide bars simultaneously overlap the same needle in opposite directions and thus produce a plated structure. The front guide bar threads strike the needle stems first and at a lower

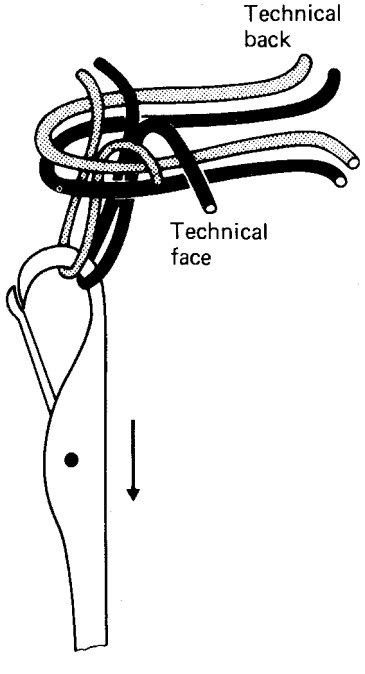

Fig. 6.9 The plating relationship of two yarns.

Skechers EX1050
Skechers v Nike

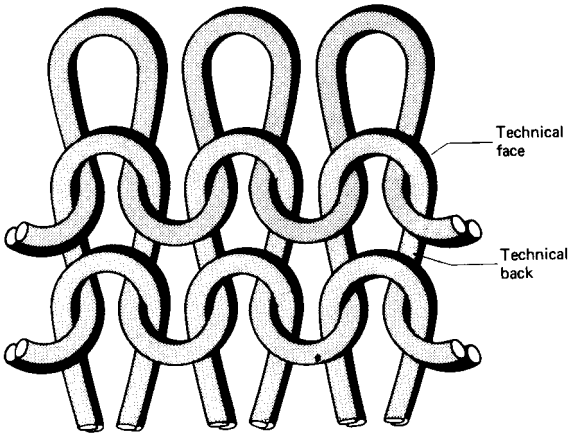

Fig. 6.10 Plating in weft knitting.

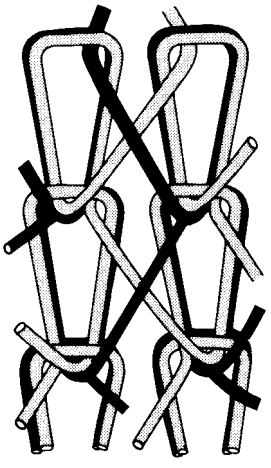

Fig. 6.11 Plating in warp knitting.

level during the return swing after the overlap, so they tend to plate on top on the technical face.

This relationship may, however, be upset if the two guide bars overlap in the same direction, because the back guide bar threads then tend to slide over the front bar threads and thus assume a lower position on the needle.

Normally the front guide threads also show on the technical back, as well as the front, because, as the underlaps emerge from out of the head of the previous loop, they are laid on top of the new overlaps in turn and the front bar underlap (black) is laid down last (Fig. 6.11).

6.8.4 Open-work structures

Knitting is noted for its production of open-work as well as close structures.

A close structure is one where the stitches provide a uniform cover across the fabric and hold the wales securely together. An *open-work structure* has normal securely-intermeshed loops but it contains areas where certain adjacent wales are not as directly joined to each other by underlaps or sinker loops as they are to the wales on their other side. The unbalanced tension causes them to move apart, producing apertures at these points. The arrows in Fig. 6.12 indicate the movement of adjacent wales towards each other at points where they are most securely joined together, thus producing an aperture on the other side of the wale.

Semi-transparent structures are produced in a similar manner but, instead of having apertures, there is less yarn crossing between the wales than elsewhere and this provides less cover at these points ('float plating', Section 9.5).

Semi-breakthrough or honeycomb structures have certain yarns that produce an open-work effect whilst others produce an all-over close structure, so that the aperture is closed on one side of the fabric.

Open-work apertures may be a number of courses in depth and, as a result of tension distortion within the structure, they may cause adjacent wales to be considerably further apart than the actual distance between two adjacent needles during knitting.

Skechers EX1050
Skechers v Nike

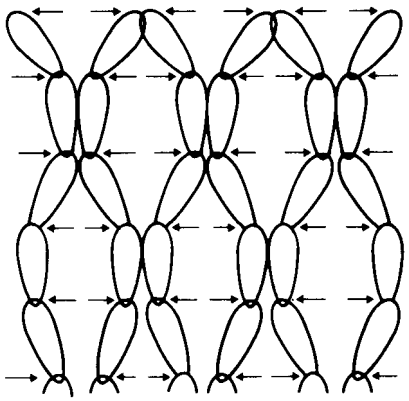

Fig. 6.12 The movement of loops to form open work.

In weft knitting only, open-work structures may be produced by the introduction of empty needles and/or by using special elements to produce loop displacement. An alternative technique is by selective press-off of fabric loops.

Open-work structures are used for fancy laces and nets for dresswear, underwear (Fig. 6.13), nightwear, lingerie, sportswear, linings, blouses and shirts, drapes and curtains, and industrial fabrics.

6.8.5 Plush and pile constructions

Although the terms 'plush' and 'pile' originally referred to specific woven structures, they are often used synonymously today in referring to a very wide range of weft and warp knitted constructions.

The essential difference between a plush and pile structure is that the *pile* is normally composed of a different type of yarn and should stand out almost at right angles from the knitted ground surface whereas the *plush* has neither of these characteristics. Both plush and pile surfaces may consist of either cut or uncut loops of yarn and, in the case of *high pile*, slivers of fibres instead of yarns are used. Generally, the production of pile fabrics tends to be a very specialized technique for both knitting and finishing. One or more of the following techniques is normally involved in the production of the two types of fabric – special points or other elements in the knitting machine, excess feeding of the pile yarn, and raising or brushing of the pile surface during finishing.

Although a certain amount of double-faced pile fabric is produced, the majority of plush and pile fabric has its surface effect on the technical back of single-faced constructions, with the sinker loops or underlaps being used to produce the effect. A variation of this technique is to use a double needle bar machine, pressing off on the second set of needles to produce the pile surface. Yet another method is to employ a double needle bar raschel to knit two separate ground constructions, one on each needle bar, each with its own yarns, and to supply a pile yarn across between the needle bars. The pile is later cut to separate the two ground fabrics and thus produce two single-sided cut pile fabrics.

Skechers EX1050
Skechers v Nike

Fig. 6.13 Bra and briefs made from elastic raschel lace fabric. Note also the scalloped, elasticated edge trimmings [Dupont 'Lycra'].

References

1. ANON, Lace making: From craft to computer, *Text. Horizons*, (1982), 2, (2) 30–32.
2. KNAPTON, J., *Making textiles*, Shirley Inst. 7th Int., Seminar, (Oct. 1974), page 5 of published papers.
3. LOMBARDI, V. J., Modern variants on the weft knit theme, *Knit. Int.*, (Oct. 1976), 50–5.
4. NIEDERER, K. M., Knit weaving, *Knit. Int.*, (Dec. 1977), 49–50.
5. WHEATLEY, B. Co-We-Nit (Part 3), *Knit. O'wr Times*, (22 July 1968), 45–51.

Further information

ENGELHARD, O., Warp versus weft knitting, *Hos. Trade J.*, (Aug. 1967), 92–5.

Skechers EX1050
Skechers v Nike

7

The four primary base weft knitted structures

7.1 Introduction

Four primary structures – plain, rib, interlock and purl – are the base structures from which all weft knitted fabrics and garments are derived. Each is composed of a different combination of face and reverse meshed stitches, knitted on a particular arrangement of needle beds. Each primary structure may exist alone, in a modified form with stitches other than normal cleared loops, or in combination with another primary structure in a garment-length sequence.

All weft knitted fabric is liable to unrove (unravel), or ladder, from the course knitted last, unless special 'locking courses' are knitted, or unless it is specially seamed or finished.

Plain is produced by the needles knitting as a single set, drawing the loops away from the technical back and towards the technical face side of the fabric.

Rib requires two sets of needles operating in between each other so that wales of face stitches and wales of reverse stitches are knitted on each side of the fabric.

Interlock was originally derived from rib but requires a special arrangement of needles knitting back-to-back in an alternate sequence of two sets, so that the two courses of loops show wales of face loops on each side of the fabric exactly in line with each other, thus hiding the appearance of the reverse loops.

Purl is the only structure having certain wales containing both face and reverse meshed loops. A garment-length sequence, such as a ribbed half-hose, is defined as purl, whereas smaller sections of its length may consist of plain and rib sections.

Although in the past structures of this type were knitted only on flat bed and double cylinder purl machines employing double-ended latch needles, electronically-controlled V-bed flat machines with rib loop transfer and racking facilities are now used.

- Single-jersey machines can only produce one type of base structure.
- Rib machines, particularly of the garment-making type, can produce sequences of plain knitting by using only one bed of needles.
- Interlock machines can sometimes be changed to rib knitting.

Skechers EX1050
Skechers v Nike

- Purl machines are capable of producing rib or plain knitting sequences by retaining certain needle arrangements during the production of a garment or other knitted article.

7.2 Plain structure

Plain (the stocking stitch of hand knitting) is the base structure of ladies' hosiery, fully fashioned knitwear and single-jersey fabrics. Its use in ladies' suiting was popularised by Lily Langtry (1852–1929), known as the 'Jersey Lily' after her island birthplace. Other names for plain include *stockinette*, whilst in the USA the term '*shaker stitch*' is applied to it when knitted in a coarse gauge of about $3\frac{1}{2}$ needles per inch (25 mm). The term '*plain knit*' may be used instead of just 'plain', particularly when the structure has a surface design.

Its technical face (Fig. 7.1) is smooth, with the side limbs of the needle loops having the appearance of columns of V's in the wales. These are useful as basic units of design when knitting with different coloured yarns.

On the technical back, the heads of the needle loops and the bases of the sinker loops form columns of interlocking semi-circles (Fig. 7.2), whose appearance is sometimes emphasised by knitting alternate courses in different coloured yarns.

Plain can be unroved from the course knitted last by pulling the needle loops through from the technical back, or from the course knitted first by pulling the sinker loops through from the technical face side. Loops can be prevented from unroving by binding-off.

If the yarn breaks, needle loops successively unmesh down a wale and sinker loops unmesh up a wale; this structural breakdown is termed *laddering* after 'Jacob's Ladder' [1].

Laddering is particularly prevalent in ladies' hosiery, where loops of fine smooth filaments are in a tensioned state; to reduce this tendency, certain ladder-resist structures have been devised. The tendency of the cut edges of plain fabric to unrove

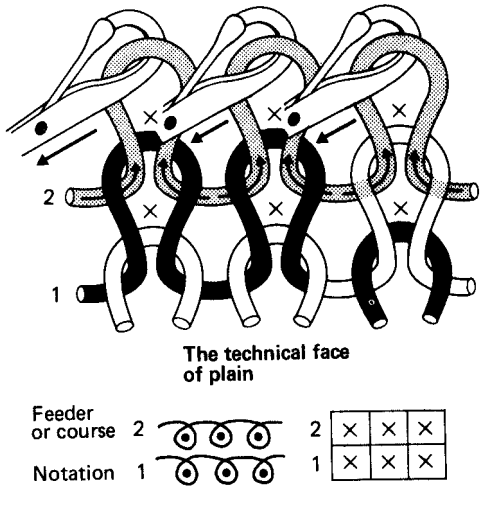

Fig. 7.1 The technical face of plain weft knitted fabric.

Skechers EX1050
Skechers v Nike

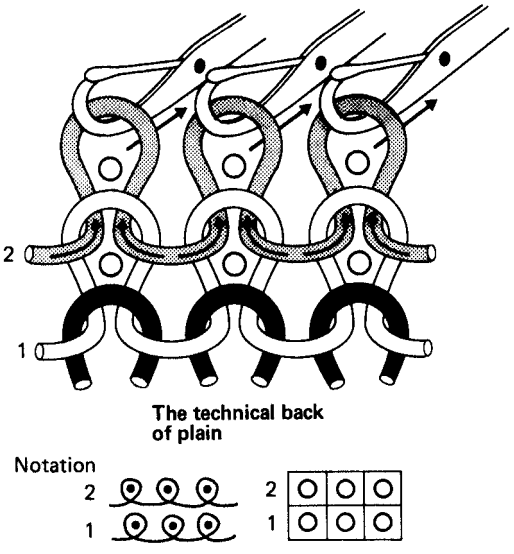

Fig. 7.2 The technical back of plain weft knitted fabric.

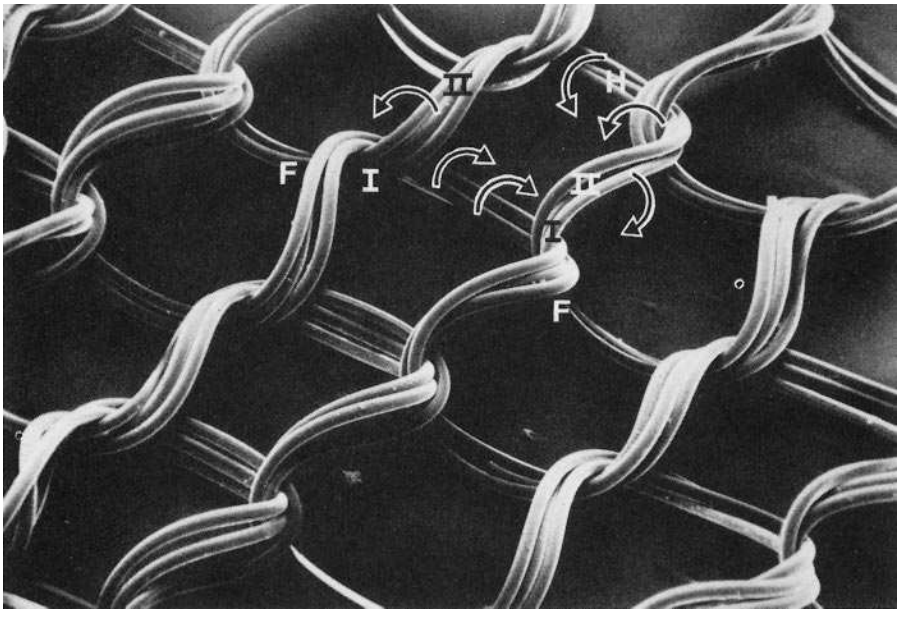

Fig. 7.3 The three-dimensional structure of plain weft knitting [Milliken AGILON] magnified ×130 by a stereoscan electron microscope. The arrows indicate the direction in which the fabric will tend to curl if it is cut. [By permission of *Knitting Times*, official publication of NKSA USA].

and fray when not in tubular or flat selvedged form can be overcome by securing them during seaming.

Knitted structures have a three-dimensional structure as shown in Fig. 7.3. At the point where the new needle loop is drawn through the old loop (I), the structure is

Skechers EX1050
Skechers v Nike

composed of two yarn thicknesses (diameters) instead of one. The needle loop is therefore held down, both at its head (H) and its feet (F), by loops in the same wale, but its side limbs tend to curve upwards at (II).

When the fabric is cut, the loops are no longer held in this configuration so that the fabric curls towards the face at the top and bottom and towards the back at the sides. The same configuration causes face meshed wales of loops to be prominent in rib fabrics and the heads of loops and the sinker loops to be prominent in wales of purl stitches.

Plain is the simplest and most economical weft knitted structure to produce and has the maximum covering power. It normally has a potential recovery of 40% in width after stretching.

7.2.1 Production of single-jersey fabric on a circular latch needle machine

Most single-jersey fabric is produced on circular machines whose latch needle cylinder and sinker ring revolve through the stationary knitting cam systems that, together with their yarn feeders, are situated at regular intervals around the circumference of the cylinder. The yarn is supplied from cones, placed either on an integral overhead bobbin stand or on a free-standing creel, through tensioners, stop motions and guide eyes down to the yarn feeder guides.

The fabric, in tubular form, is drawn downwards from inside the needle cylinder by tension rollers and is wound onto the fabric-batching roller of the winding-down frame. The winding-down mechanism revolves in unison with the cylinder and fabric tube and is rack-lever operated via cam-followers running on the underside of a profiled cam ring. As the sinker cam-plate is mounted outside on the needle circle, the centre of the cylinder is open and the machine is referred to as an *open top* or *sinker top* machine.

Compared with a rib machine, a plain machine is simpler and more economical, with a potential for more feeders, higher running speeds and knitting a wider range of yarn counts. The most popular diameter is 26 inches (66 cm) giving an approximate finished fabric width of 60–70 inches (152–178 cm). An approximately suitable count may be obtained using the formula $NeB = G^2/18$ or $NeK = G^2/15$, where NeB = cotton spun count, NeK = worsted spun count, G = gauge in npi. For fine gauges, a heavier and stronger count may be necessary.

Examples of typical metric cotton counts for machine gauges are:

E 18 Nm1/24–1/32,
E 20 Nm1/28–1/40,
E 22 Nm1/32–1/44,
E 24 Nm1/34–1/48,
E 28 Nm1/50–1/70

7.2.1.1 The knitting head

Figure 7.4 shows a cross section of the knitting head all of whose stationary parts are shaded.

1 Yarn feeder guide, which is associated with its own set of knitting cams.
2 Latch needle.
3 Holding-down sinker – one between every needle space.
4 Needle cylinder (in this example, revolving clockwise).
5 Cylinder driving wheel.

Skechers EX1050
Skechers v Nike

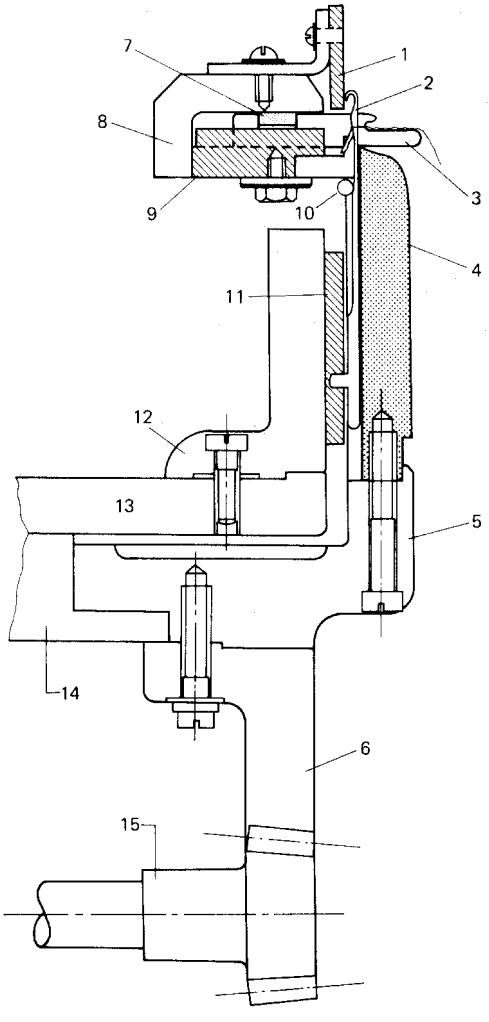

Fig. 7.4 Cross-section of knitting head of a single jersey machine.

6 Cylinder driving gear.
7 Sinker-operating cams, which form a raised track operating in the recess of the sinker.
8 Sinker cam-cap.
9 Sinker trick ring, which is simply and directly attached to the outside top of the needle cylinder thus causing the sinkers to revolve in unison with the needles.
10 Needle-retaining spring.
11 Needle-operating cams which, like the sinker cams, are stationary.
12 Cam-box.
13 Cam-plate.
14 Head plate.
15 Cylinder driving pinion attached to the main drive shaft.

Skechers EX1050
Skechers v Nike

7.2.1.2 The knitting action

Figure 7.5(a–e) shows the knitting action of a latch needle and holding-down sinker during the production of a course of plain fabric.

(a) *Tucking in the hook or rest position*. The sinker is forward, holding down the old loop whilst the needle rises from the rest position.
(b) *Clearing*. The needle has been raised to its highest position clearing the old loop from its latch.
(c) *Yarn feeding*. The sinker is partially withdrawn allowing the feeder to present its yarn to the descending needle hook and also freeing the old loop so that it can slide up the needle stem and under the open latch spoon.
(d) *Knock-over*. The sinker is fully withdrawn whilst the needle descends to knock-over its old loop on the sinker belly.
(e) *Holding-down*. The sinker moves forward to hold down the new loop in its throat whilst the needle rises under the influence of the upthrow cam to the rest position where the head of the open hook just protrudes above the sinker belly.

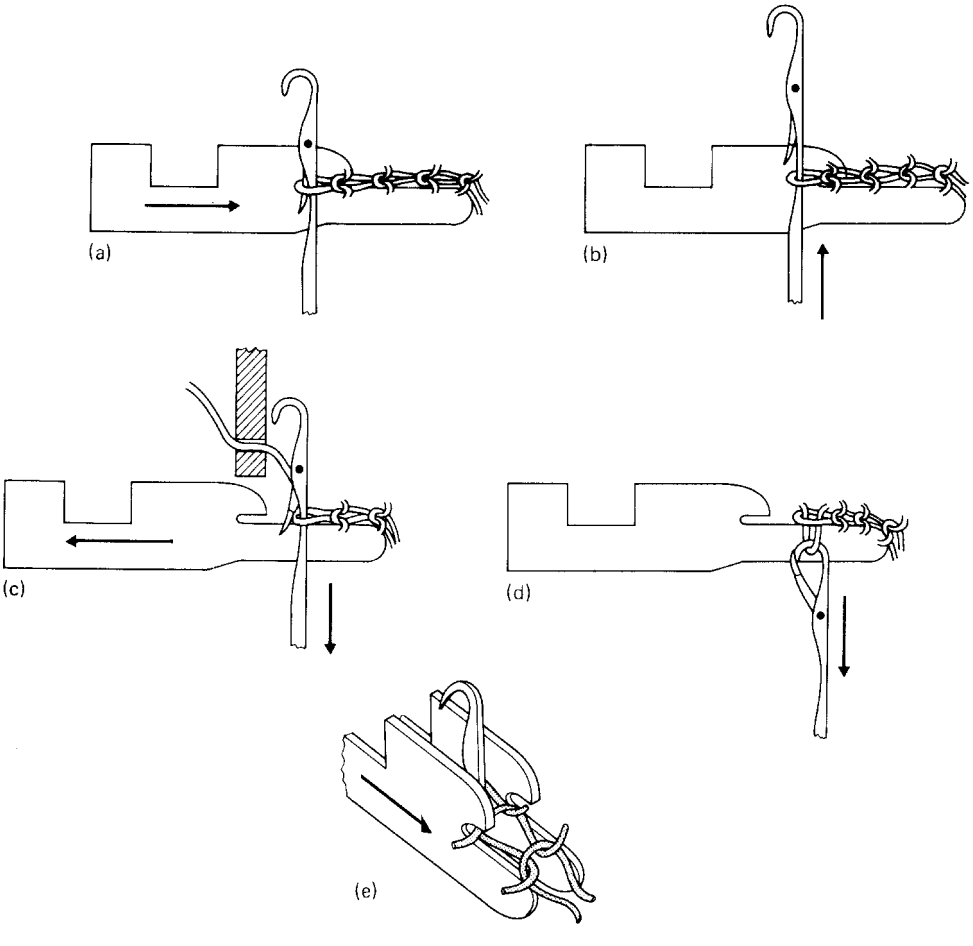

Fig. 7.5 Knitting cycle of a single jersey latch needle machine.

Skechers EX1050
Skechers v Nike

7.2.1.3 The cam system

Figure 7.6 shows the arrangement and relationship between the needle and sinker cams as the elements pass through in a left to right direction with the letters indicating the positions of the elements at the various points in the knitting cycle. The needle cam race consists of the following: the clearing cam (1) and its guard cam (4), the stitch cam (2) and upthrow cam (3) which are vertically adjustable together for alteration of stitch length, and the return cam (5) and its guard cam (6).

The three sections of the sinker cam race are the race cam (7), the sinker-withdrawing cam (8) and the sinker-return cam (9) which is adjustable in accordance with the stitch length.

7.2.1.4 Sinker timing

The most forward position of the sinker during the knitting cycle is known as the *push point* and its relationship to the needles is known as the *sinker timing*. If the sinker cam-ring is adjusted so that the sinkers are advanced to the point where they rob yarn from the new stitches being formed, a lighter-weight fabric with oversized sinker loops and smaller needle loops is produced. If the ring is moved in the oppo-

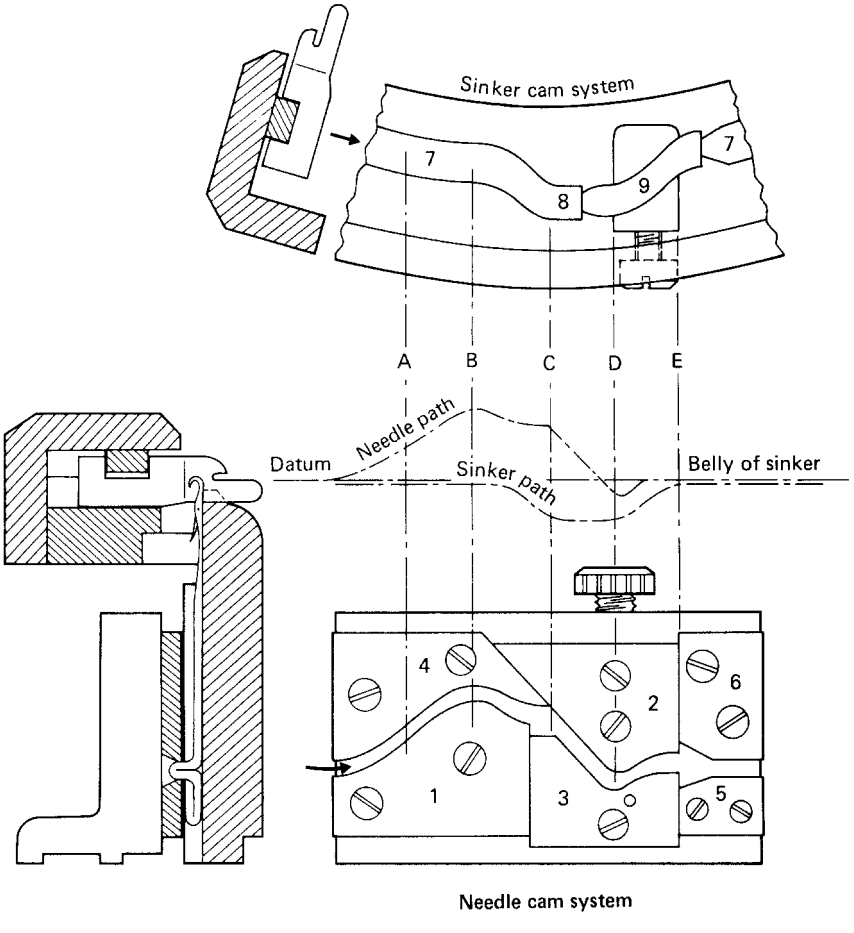

Fig. 7.6 Sinker timing on a single jersey machine.

Skechers EX1050
Skechers v Nike

site direction, a tighter, heavier fabric is produced having smaller sinker loops and larger needle loops. The timing is normally set between the two extremes.

7.2.2 The 'contra' knitting technique

The '*contra*', *relative* or *shared loop* knitting technique is used on some modern circular single-jersey fabric machines. The sinkers move vertically, to positively assist in holding-down and knocking-over the fabric loops so that they move in opposition to both the rise and the fall of the needles, as well as having the normal radial movement between the needles. The contra movement of the fabric loops considerably reduces the extent of the needle movement.

As on the old bearded needle sinker-wheel machines, one loop is almost fully formed before the next loop is commenced. There are thus less metal/yarn contact points (each of which doubles the tension of the previous point). Contra knitting therefore reduces the tendency to 'rob back', produces less knitting element stress, improves fabric quality, 'handles' yarns more gently, and enables weaker and lower quality yarns to be knitted. The smaller needle movement enables cam angles to be employed so that speeds up to 1.4 m/sec can be achieved. (See also Section 13.10.)

7.3 Rib structure

The simplest rib fabric is 1 × 1 rib. The first rib frame was invented by *Jedediah Strutt* of Derby in 1755, who used a second set of needles to pick up and knit the sinker loops of the first set. It is now normally knitted with two sets of latch needles (Figures 7.7, 7.8).

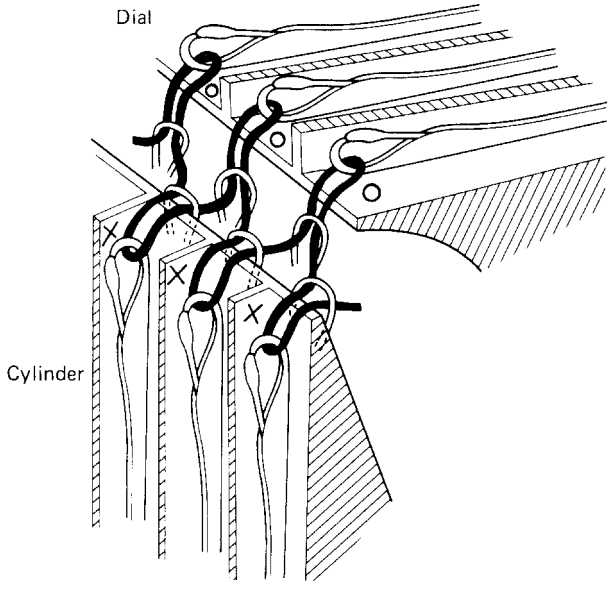

Fig. 7.7 Structure of 1 × 1 rib.

Skechers EX1050
Skechers v Nike

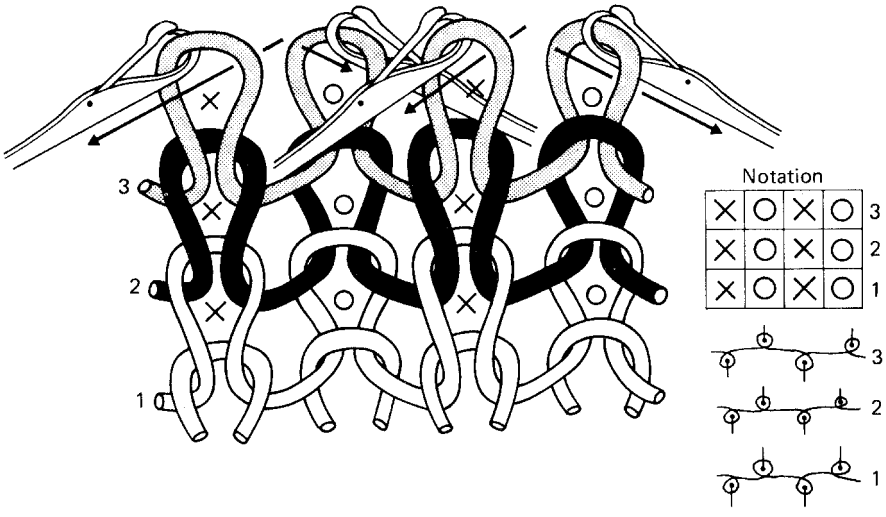

Fig. 7.8 Face and reverse loop wales in 1 × 1 rib.

Rib has a vertical cord appearance because the face loop wales tend to move over and in front of the reverse loop wales. As the face loops show a reverse loop intermeshing on the other side, 1 × 1 rib has the appearance of the technical face of plain fabric on both sides until stretched to reveal the reverse loop wales in between.

1 × 1 rib is production of by two sets of needles being alternately set or gated between each other. Relaxed 1 × 1 rib is theoretically twice the thickness and half the width of an equivalent plain fabric, but it has twice as much width-wise recoverable stretch. In practice, 1 × 1 rib normally relaxes by approximately 30 per cent compared with its knitting width.

1 × 1 rib is balanced by alternate wales of face loops on each side; it therefore lies flat without curl when cut. It is a more expensive fabric to produce than plain and is a heavier structure; the rib machine also requires finer yarn than a similar gauge plain machine. Like all weft-knitted fabrics, it can be unroved from the end knitted last by drawing the free loop heads through to the back of each stitch. It can be distinguished from plain by the fact that the loops of certain wales are withdrawn in one direction and the others in the opposite direction, whereas the loops of plain are always withdrawn in the same direction, from the technical face to the technical back.

Mock Rib is plain fabric knitted on one set of needles, with an elastic yarn inlaid by tucking and missing so that the fabric concertinas and has the appearance of 1 × 1 rib. It is knitted at the tops of plain knit socks and gloves.

Rib cannot be unroved from the end knitted first because the sinker loops are securely anchored by the cross-meshing between face and reverse loop wales. This characteristic, together with its elasticity, makes rib particularly suitable for the extremities of articles such as tops of socks, cuffs of sleeves, rib borders of garments, and stolling and strapping for cardigans. Rib structures are elastic, form-fitting, and retain warmth better than plain structures.

Skechers EX1050
Skechers v Nike

7.3.1 Rib set-outs

There is a range of rib set-outs apart from 1 × 1 rib. The first figure in the designation indicates the number of adjacent plain wales and the second figure, the number of adjacent rib wales. *Single* or *simple ribs* have more than one plain wale but only one rib wale, such as 2/1, 3/1, etc. *Broad ribs* have a number of adjacent rib as well as plain wales, for example, 6/3 *Derby Rib* (Fig. 7.9). Adjacent wales of the same type are produced by adjacent needles in the same bed, without needles from the other bed knitting in between them at that point.

The standard procedure for rib set-outs is to take out of action in one bed, one less needle than the number of adjacent needles required to be working in the other bed (Fig. 7.9).

In the case of purl machines, the needles knit either in one bed or the other, so there are theoretically the same number of needles out of action in the opposite bed as are knitting in the first. In the case of 2/2 rib, *Swiss rib* (Fig. 7.9), this is produced on a rib machine by taking one needle out of action opposite the two needles knitting.

Swiss rib is sometimes confusingly termed 2/3 rib because 2 out of 3 needles in each bed are knitting. It is not possible to commence knitting on empty needles with the normal 2 × 2 arrangement because the two needles in each bed will not form individual loops – they will make one loop across the two hooks. One needle bed must be racked by one needle space so that the 2 × 2 needle set-out is arranged for 1 × 1 rib; this is termed '*skeleton 1 × 1*'; after knitting the set-up course, the bed is racked back so that 2 × 2 rib knitting can commence.

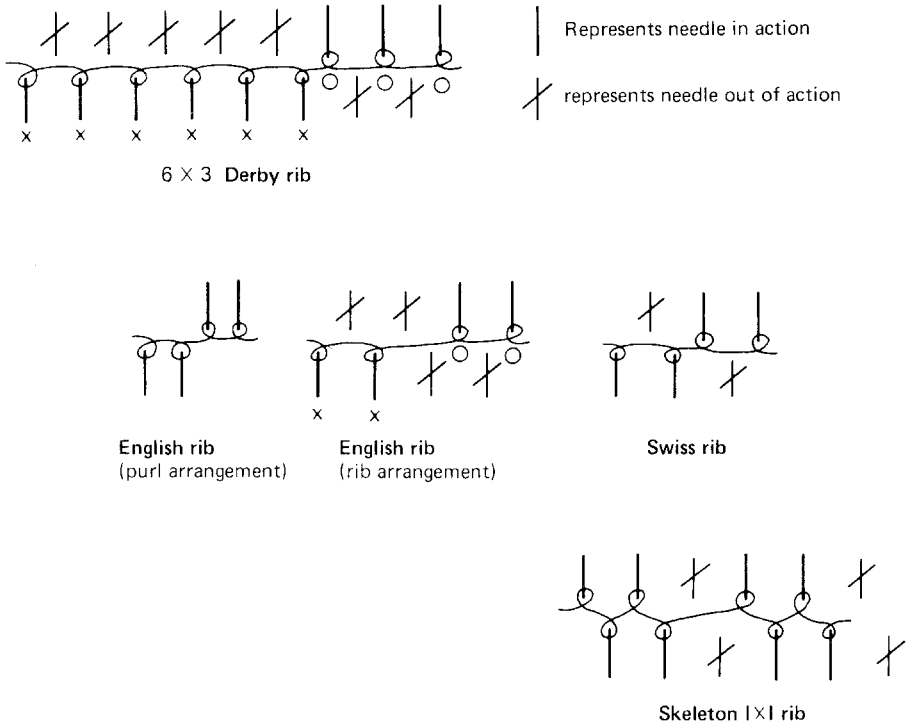

Fig. 7.9 Rib set-outs.

Skechers EX1050
Skechers v Nike

English rib is produced on a purl machine (or rib machine) with two empty tricks opposite to the two needles knitting; this type of rib is less elastic than Swiss rib.

In garment-length knitting, a direct change of knitting from 2 × 2 to 1 × 1 rib brings every third needle into action. At the first course, the limbs of the loops knitted on these formerly empty needles open out, producing apertures between every two wales that spoil the appearance of the structure. This problem is overcome by knitting a tubular *cover course* of plain on all needles in one bed, then on all needles in the other bed. On each side, the sinker loops draw the wales together and prevent the loops on the newly-introduced needles from forcing the wales apart.

7.3.2 The knitting action of the circular rib machine

The knitting action of a circular rib machine is shown in Fig. 7.10:

(a) *Clearing*. The cylinder and dial needles move out to clear the plain and rib loops formed in the previous cycle.
(b) *Yarn Feeding*. The needles are withdrawn into their tricks so that the old loops are covered by the open latches and the new yarn is fed into the open hooks.
(c) *Knocking-over*. The needles are withdrawn into their tricks so that the old loops are cast off and the new loops are drawn through them.

In a gauge range from 5 to 20 npi, an approximately suitable count may be obtained using the formula $NeB = G^2/8.4$, where NeB = cotton count and G = gauge in npi.

For underwear fabric, a popular gauge is E 14 with a count of 1/30's.

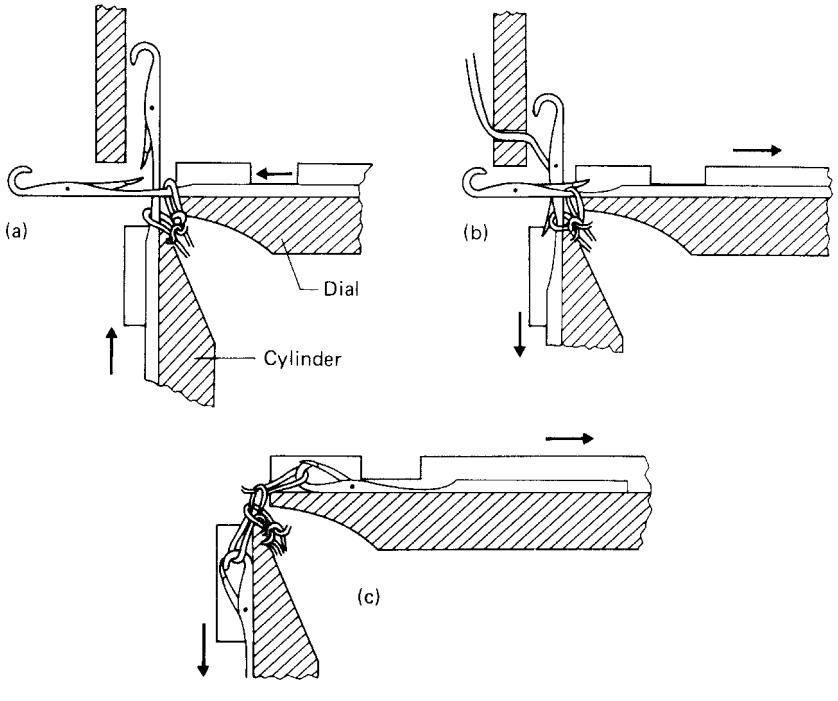

Fig. 7.10 Knitting action of a circular rib machine.

Skechers EX1050
Skechers v Nike

7.3.3 Needle timing

Needle timing (Fig. 7.11) is the relationship between the loop-forming positions of the dial and cylinder needles measured as the distance in needles between the two stitch cam knock-over points. Collective timing adjustment is achieved by moving the dial cam-plate clockwise or anti-clockwise relative to the cylinder; individual adjustment at particular feeders (as required) is obtained by moving or changing the stitch cam profile.

Synchronized timing (Fig. 7.12), also known as *point*, *jacquard* and *2 × 2 timing*, is the term used when the two positions coincide with the yarn being pulled in an alternating manner in two directions by the needles, thus creating a high tension during loop formation.

With *delayed timing*, also called *rib* or *interlock timing* (Fig. 7.13) the dial knock-over occurs after about four cylinder needles have drawn loops and are rising

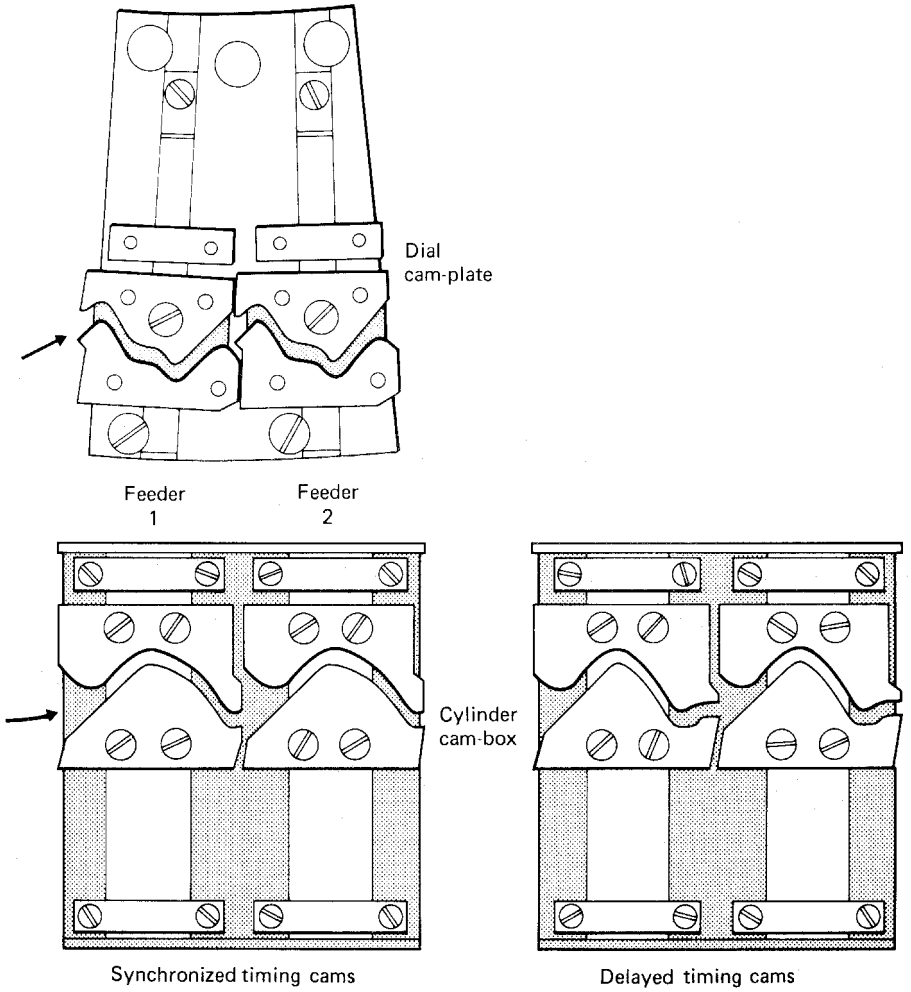

Fig. 7.11 Needle cam timing for a circular rib machine.

Skechers EX1050
Skechers v Nike

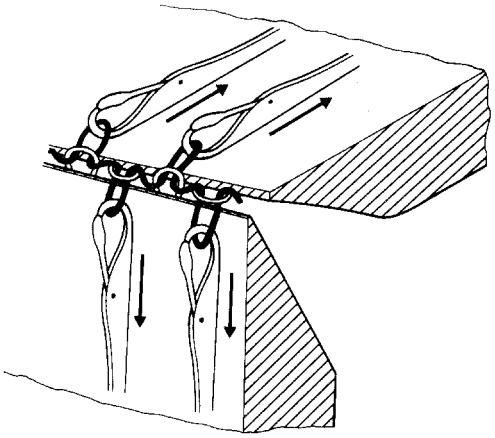

Fig. 7.12 Synchronised timing.

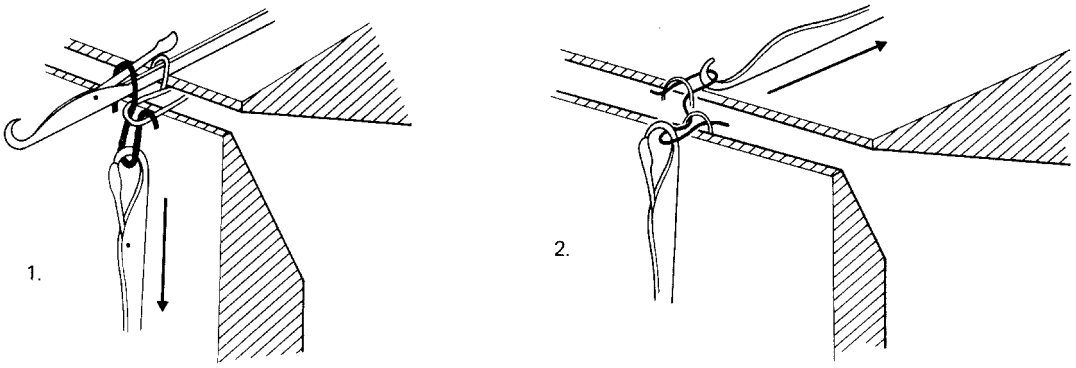

Fig. 7.13 Delayed timing.

slightly to relieve the strain. The dial loops are therefore composed of the extended loops drawn over the dial needle stems during cylinder knock-over, plus a little yarn robbed from the cylinder loops. The dial loops are thus larger than the cylinder loops and the fabric is tighter and has better rigidity; it is also heavier and wider, and less strain is produced on the yarn.

Rib jacquard or broad ribs cannot be produced in delayed timing because there will not always be cylinder needles knitting either side of the dial needles from which to draw yarn. Although the dial knock-over is delayed, it is actually achieved by advancing the timing of the cylinder knock-over (Fig. 7.11).

Advanced timing is the reverse of delayed timing. The cylinder loops rob from the dial, producing tighter dial loops; advancement can only be about one needle. This type of timing is sometimes used in the production of figured ripple double-jersey fabrics, where selected cylinder needles can rob from the all knitting dial needles [2].

Skechers EX1050
Skechers v Nike

7.4 Interlock structure

Although the American *Scott and Williams* Patent of 1908 for interlock was extended for 20 years, underwear manufacturers found the needles expensive, especially on the larger 20 inch (51 cm) diameter model. Suitable hosiery twist cotton yarn only became available in 1925, and the first stationary cam-box machine appeared in 1930.

Originally, interlock was knitted almost solely in cotton on 20 gauge (needles per inch) machines for underwear, a typical weight being 5 oz per square yard (170 g per square metre) using 1/40's s cotton, but from the 1950s onwards, 18 gauge machines were developed for knitting double-jersey for semi-tailored suiting because the open-width fabric could be finished on existing equipment. As the machines became more versatile in their capabilities, the range of structures became greater.

Interlock has the technical face of plain fabric on both sides, but its smooth surface cannot be stretched out to reveal the reverse meshed loop wales because the wales on each side are exactly opposite to each other and are locked together (Fig. 7.14). Each interlock pattern row (often termed an '*interlock course*') requires two feeder courses, each with a separate yarn that knits on separate alternate needles, producing two half-gauge 1 × 1 rib courses whose sinker loops cross over each other. Thus, odd feeders will produce alternate wales of loops on each side and even feeders will produce the other wales.

Interlock relaxes by about 30–40 per cent or more, compared with its knitted width, so that a 30-inch (76 cm) diameter machine will produce a tube of 94-inch (2.4 m) open width which finishes at 60–66 inches (1.5–1.7 m) wide. It is a balanced, smooth, stable structure that lies flat without curl. Like 1 × 1 rib, it will not unrove from the end knitted first, but it is thicker, heavier and narrower than rib of equivalent gauge, and requires a finer, better, more expensive yarn.

As only alternate needles knit at a feeder, interlock machines can be produced in finer gauges than rib, with less danger of press-offs. Interlock knitting is, however, more of a problem than rib knitting, Because productivity is half, less feeders can be accommodated, and there are finer tolerances. When two different-coloured

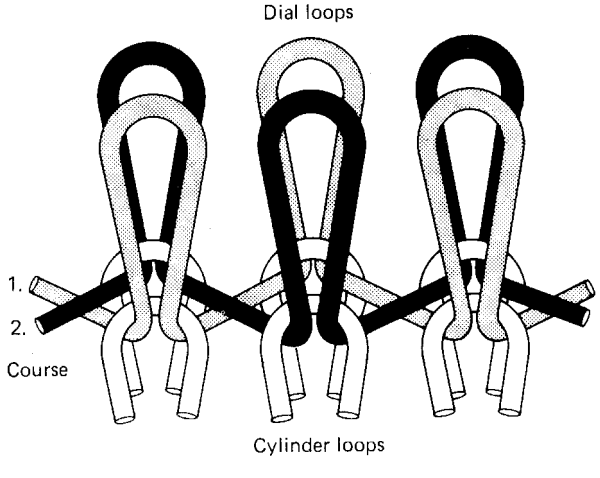

Fig. 7.14 Interlock fabric structure.

Skechers EX1050
Skechers v Nike

yarns are used, horizontal stripes are produced if the same colour is knitted at two consecutive feeders, and vertical stripes if odd feeders knit one colour and even feeders knit the other colour. The number of interlock pattern rows per inch is often double the machine gauge in needles per inch.

The interlock structure is the only weft knitted base not normally used for individual needle selection designs, because of the problems of cylinder and dial needle collision. However, selection has, in the past, been achieved by using four feeder courses for each pattern row of interlock, long and short cylinder needles not selected at the first two feeder courses for colour A being selected at the second two feeders for colour B. This knitting sequence is not cost effective.

Eightlock is a 2×2 version of interlock that may be produced using an arrangement of two long and two short needles, provided all the tricks are fully cut through to accommodate them and knock-over bits are fitted to the verges to assist with loop formation on adjacent needles in the same bed.

It was first produced on double-system V-bed flat machines having needles with two butt positions, each having its own cam system. This involved a total of eight locks, four for each needle bed, making one complete row per traverse. Set-outs for 4×4 and 3×3 can also be produced.

It is a well-balanced, uniform structure with a softer, fuller handle, greater widthwise relaxation, and more elasticity than interlock. Simple geometric designs with a four wale wide repeat composed of every two loops of identical colour, can be achieved with careful arrangement of yarns.

7.4.1 Production of interlock fabric

Interlock is produced mainly on special cylinder and dial circular machines and on some double-system V-bed flat machines (Fig. 7.15). An interlock machine must have the following:

1. *Interlock gating*, the needles in two beds being exactly opposite each other so that only one of the two can knit at any feeder.
2. *Two separate cam systems in each bed, each controlling half the needles in an alternate sequence*, one cam system controlling knitting at one feeder, and the other at the next feeder.
3. *Needles set out alternately, one controlled from one cam system, the next from the other*; diagonal and not opposite needles in each bed knit together.

Originally, the interlock machine had needles of two different lengths, long needles knitting in one cam-track and short needles knitting in a track nearer to the needle heads. Long needle cams were arranged for knitting at the first feeder and short needle cams at the second feeder. The needles were set out alternately in each bed, with long needles opposite to short needles. At the first feeder, long needles in cylinder and dial knit, and at the second feeder short needles knit together; needles not knitting at a feeder follow a run-through track. On modern machines the needles are of the same length.

Typical cotton counts for particular gauges would be:

E 16 Nm 1/28–1/50,	E 22 Nm 1/50–1/80,
E 18 Nm 1/34–1/60,	E 24 Nm 1/56–1/90,
E 20 Nm 1/40–1/70,	E 28 Nm 1/60–1/100.

Skechers EX1050
Skechers v Nike

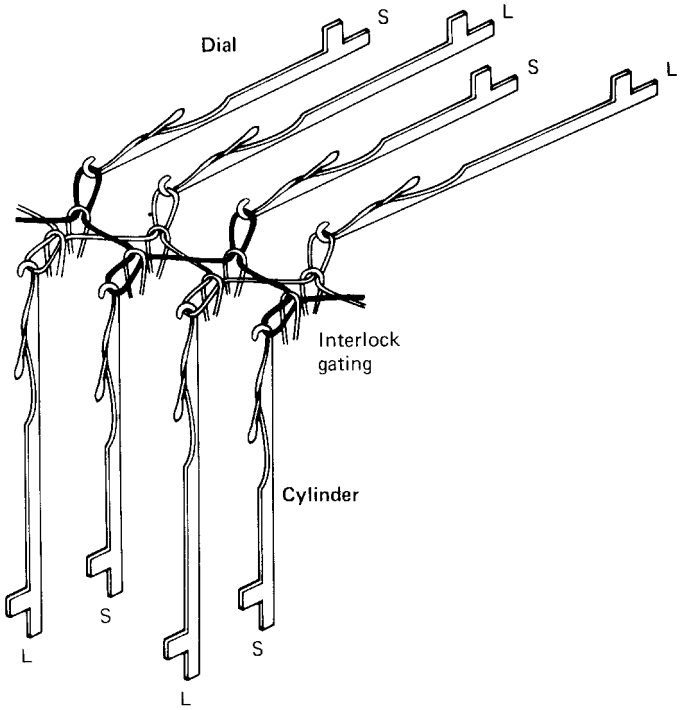

Fig. 7.15 Knitting interlock.

A 30-inch (76 cm) diameter E 28 machine running at 28 rpm and 85% efficiency, knitting 38 courses/in (15 courses/cm) from Nm 1/70 yarn would produce 34.4 lb/hr (15.6 kg/hr) of 4.45 oz/yd^2 (151 g/m^2) interlock fabric.

7.4.2 Example of an interlock cam system

Figure 7.16 shows the cylinder and dial needle camming to produce one course of ordinary interlock fabric, which is actually the work of two knitting feeders. In this example, the dial has a swing tuck cam that will produce tucking if swung out of the cam-track and knitting if in action.

The cylinder cam system

A Clearing cam which lifts the needle to clear the old loop.
B, C Stitch and guard cams respectively, both vertically adjustable for varying stitch length.
D Upthrow cam, to raise the cylinder needle whilst dial needle knocks-over.
E, F Guard cams, to complete the track.
G, H Guide cams that provide the track for the idling needles.

The dial cam system

1 Raising cam to tuck position only.
2, 3 Dial knock-over cams (adjustable).
4 Guard cam to complete the track.
5 Auxiliary knock-over cam to prevent the dial needle re-entering the old loop.

Skechers EX1050
Skechers v Nike

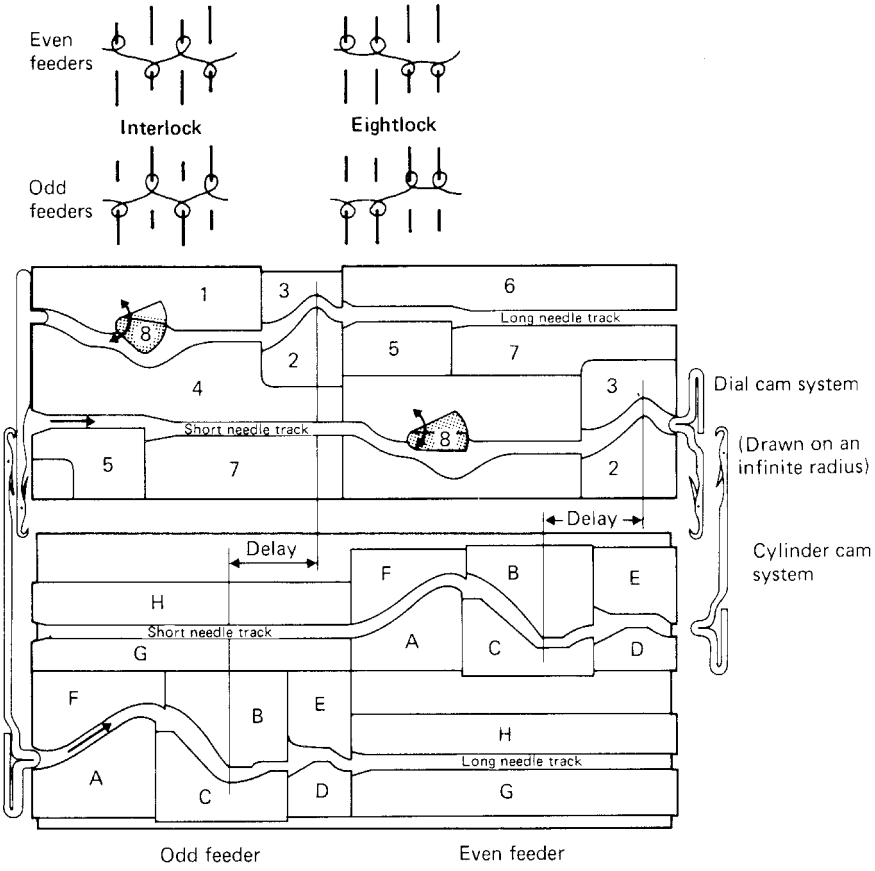

Fig. 7.16 Interlock cam system.

6, 7 Guide cams that provide the track for the idling needles.
8 Swing type clearing cam, which may occupy the knitting position as shown at feeder 1 or the tuck position as shown at feeder 2.

Interlock thus requires eight cam systems or locks in order to produce one complete course, two cam systems for each feeder in each needle bed. Basic cylinder and dial machines and flat-machines having this arrangement are often referred to as *eightlock machines*.

7.5 Purl structure

Purl was originally spelt 'pearl' and was so named because of its similar appearance to pearl droplets.

Purl structures have one or more wales which contain both face and reverse loops. This can be achieved with double-ended latch needles or by rib loop transfer from one bed to the other, combined with needle bed racking.

The semi-circles of the needle and sinker loops produced by the reverse loop intermeshing tend to be prominent on both sides of the structure and this has led

Skechers EX1050
Skechers v Nike

to the term '*links-links*' being generally applied to purl fabrics and machines. Links is the German word for left and it indicates that there are *left* or *reverse* loops visible on each side of the fabric [3]. In a similar manner, the German term for rib is rechts-rechts (right-right).

The tricks of the two needle beds in purl machines are exactly opposite to each other and in the same plane, so that the single set of purl needles, each of which has a hook at either end, can be transferred across to knit outwards from either bed (Fig. 7.17). Knitting outwards from one bed, the needle will produce *a face meshed* needle loop with the newly-fed yarn whilst the same needle knitting outwards with its other hook from the opposite bed will produce *a reverse meshed* needle loop (Fig. 7.18).

As the needle moves across between the two needle beds, the old loop slides off the latch of the hook that produced it and moves along the needle towards the other hook. It cannot enter because it will pivot the latch closed (an action that must not occur until the new yarn has been fed to that hook).

The needle hook that protrudes from the bed knits with the yarn whilst the hook in the needle trick acts as a butt and is controlled by an element termed a *slider* (Fig. 7.19). There is a complete set of sliders with their noses facing outwards from each bed. It is the sliders whose butts are controlled by the knitting and needle transfer cam systems in each bed and they, in turn, control the needles.

Each slider is normally provided with two butts – a *knitting butt* (K) near to its head and the needle hook that is connected to it, and a *transfer butt* (T) near to its tail. Each butt has its own cam system and track.

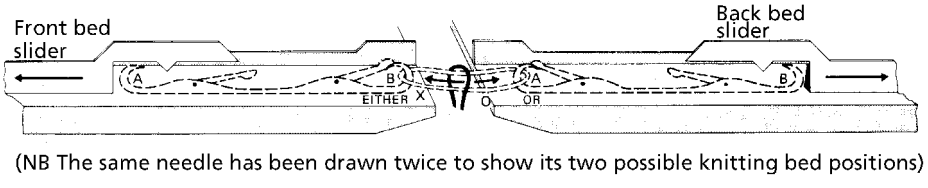

(NB The same needle has been drawn twice to show its two possible knitting bed positions)

Fig. 7.17 Purl knitting using sliders.

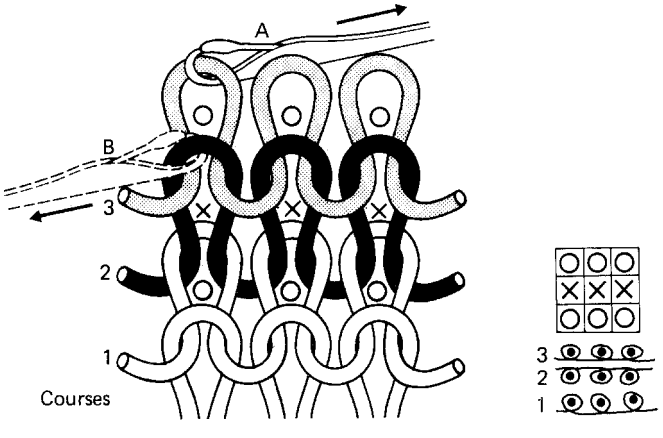

Fig. 7.18 Purl fabric structure.

Skechers EX1050
Skechers v Nike

There are two types of purl needle bed machine – *flat bed purls*, which have two horizontally opposed needle beds and *circular purls (double cylinder machines)*, which have two superimposed cylinders one above the other. Both types of machine generally produce garment lengths.

Flat bed purls are no longer built because electronically-controlled V-bed flat machines can now knit types of links-links designs. Small diameter (6 inch/15 cm or less) double cylinder machines are used to knit broad rib socks, whereas larger diameter machines produce knitwear.

V-bed rib machines will knit purl stitch designs if rib loops are transferred across to empty needles in the opposing bed, which then begin to knit in the same wales.

The simplest purl is *1 × 1 purl*, which is the garter stitch of hand knitters and consists of alternate courses of all face and all reverse loops and is produced by the needles knitting in one bed and then transferring over to the other bed to knit the next course (Fig. 7.18). Its lateral stretch is equal to plain, but its length-wise elasticity is almost double. When relaxed, the face loop courses cover the reverse loop courses, making it twice as thick as plain. It can be unroved from both ends because the free sinker loops can be pulled through at the bottom of the fabric. In the USA, 1 × 1 purl is sometimes made up at right angles to the knitting sequence and is then termed '*Alpaca stitch*'.

Another simple purl is *moss stitch*, which consists of face and reverse loops in alternate courses and wales (Fig. 7.20). *Basket purls* consist of rectangular areas of all X or all O loops, which alternate with each other. Examples include 5 × 3 (Fig. 7.21), 7 × 3, 4 × 4 (Fig. 7.22). On some of the older machines, a collecting row with all needles knitting in one bed making a plain course is necessary before needles change over beds [4].

The reverse stitches of purl give it the appearance of hand knitting and this is enhanced by using softly spun yarns. It is particularly suitable for baby wear, where width and length stretch is required, and also for adult knitwear.

The double-cylinder half-hose machine is actually a small diameter purl machine that produces ribs by retaining needles in the same set-out for a large number of successive courses.

7.5.1 Purl needle transfer action

The following conditions are necessary in order to achieve the transference of a purl needle from the control of a slider in one bed into the control of a slider in the opposite bed (Fig. 7.19):

1 Engagement of the head of the receiving slider with the needle hook that was originally knitting from the opposing bed.
2 Cam action causing the head of the delivering slider to pivot outwards from the trick and thus disengage itself from the other hook of the needle.
3 Sufficient free space to allow the heads of the sliders to pivot outwards from their tricks during engagement and disengagement of the needles.
4 A positive action which maintains the engagement of the head of a slider with a needle hook throughout its knitting cycle by ensuring that it is pressed down into the trick.

Skechers EX1050
Skechers v Nike

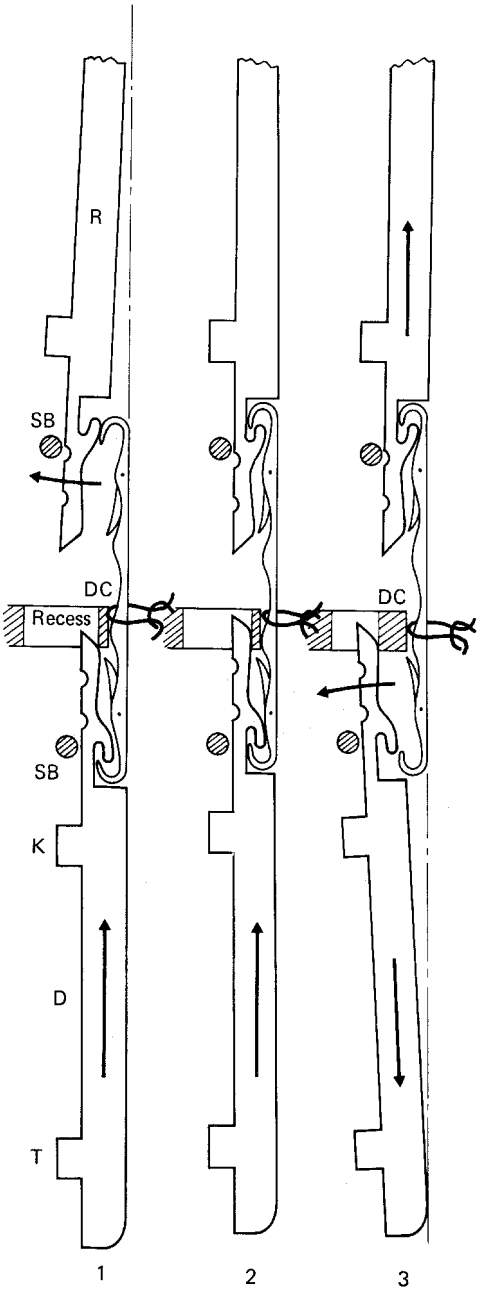

Fig. 7.19 Purl needle transfer action.

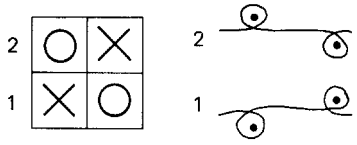

Fig. 7.20 Purl notation.

7.5.2 The use of dividing cams

Figure 7.19 illustrates the transfer action using *dividing cams*, on a revolving double-cylinder machine with internal holding-down sinkers and stationary cam-boxes. The dividing cam principle for slider disengagement was, until recently, in widespread use on half-hose machines, although it had already been replaced on the double-

Skechers EX1050
Skechers v Nike

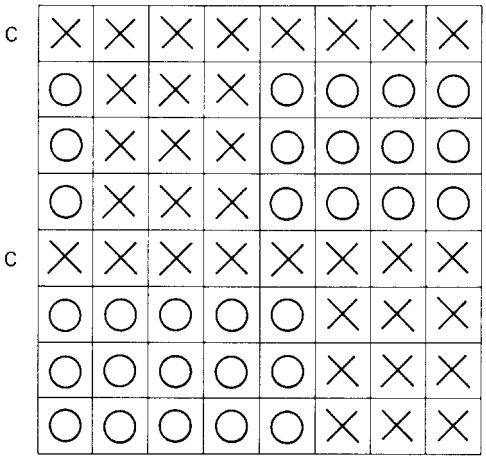

(c = collecting row)

Fig. 7.21 Basket purl with a collecting course.

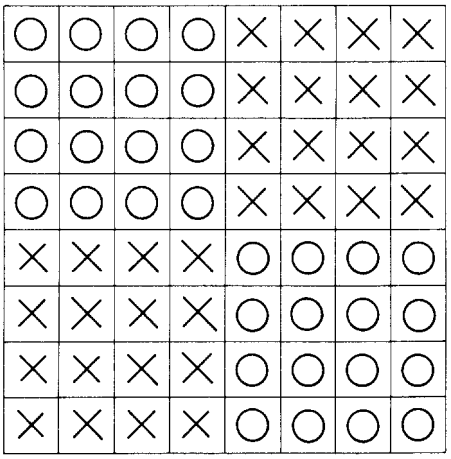

Fig. 7.22 Basket purl without a collecting course.

cylinder garment-length purl machines that succeeded the original Spensa purl machine.

The dividing cam is an internally-profiled, cut-through recess in a flat plate, attached horizontally and externally to the cylinders at a position half-way between them. There is a recess cam position for the top cylinder and another for the bottom cylinder in a different position in the same plate. The principle of the dividing cam operation is that it forms a wedge shape of increasing thickness between the upper surface of the needle hook and the under surface of the extended nose of the delivering slider, pivoting it away from the cylinder so that it disengages from the needle hook.

1 The delivering slider (D) advances with the needle so that the nose of the slider, which is extended into a latch guard, penetrates the profiled recess of the dividing cam. The outer hook of the needle contacts the hook underneath the head of the receiving slider (R), pivoting it out of the cylinder, but it immediately returns and –
2 engages with the needle hook under the influence of a coil spring band (SB) that surrounds each cylinder and ensures that the slider heads are depressed into contact with the needle hooks.
3 As slider D revolves with the cylinder, it passes along the wall of the dividing cam (DC), which increases in thickness so that the slider is pivoted outwards and disengages from the needle hook. Slider D then returns to its cylinder whilst slider R retires into its cylinder, taking the needle with it, ready for the next knitting feed.

7.5.3 The use of spring-loaded cams

Figure 7.23 illustrates the *spring-loaded cam method of slider disengagement*, used in the SPJ type machine, which is the successor of the Spensa purl but has stationary cylinders (without internal sinkers) and revolving cam-boxes. A similar

Skechers EX1050
Skechers v Nike

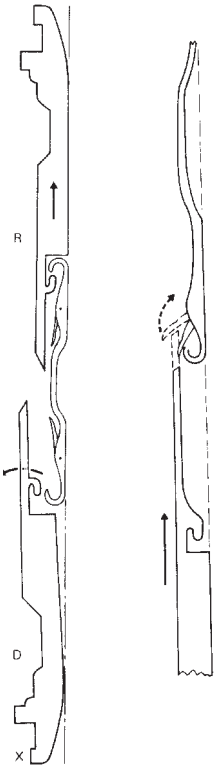

Fig. 7.23 Purl needle transfer using spring loaded cams.

technique is being generally introduced into double-cylinder half-hose machines, although these have revolving cylinders. At the moment of disengagement, the spring-loaded cam presses onto the tail of the delivering slider (D), causing its head to swing away from the cylinder and to disengage itself from the needle hook. The action is made possible by the tapering under-surface of the slider tail.

This method is simpler and safer and operates well at high speeds. The latch guard nose of the slider is extended and pointed to act as a latch-opener as the receiving slider meets the approaching head of the needle, whose latch is specially shaped to facilitate the action. This action reduces the danger of press-offs occurring through latches closing onto empty hooks. (On the *Spensa* purl, two ends of yarn were knitted so that yarn breakage and a subsequent press-off were less likely to occur).

References

1. DAVIES, W., *Hosiery Manufacture*, (1923), Pitman, London, UK, 129.
2. PAEPKE, H., Fundamentals of delayed and synchronised timing, *Knit. O'wr Times*, (8 May 1967), 145–51.
3. WILLKOMM, G., *Technology of framework knitting*, (1885), (Eng. trans. ROWLETT, W. T., Hewitt, Leicester, UK. First Part, Chapter 2, p.78).
4. LANCASHIRE, J. B., Focus on purl knitting, *Hos. Trade J.*, (March 1961), 84–8.

Skechers EX1050
Skechers v Nike

8

The various types of weft knitting machines

8.1 Fabric machines and garment-length machines

Weft knitting machines may be broadly grouped according to end product as either:

- *circular machines*, knitting *tubular fabric* in a continuous uninterrupted length of constant width, or
- *flat* and *circular machines*, knitting *garment-length sequences*, which have a timing or counting device to initiate an additional garment-length programming ('machine control') mechanism. This co-ordinates the knitting action to produce a garment-length structural repeat sequence in a wale-wise direction. The garment width may or may not vary within the garment length.

The difference between fabric and garment-length knitting is best understood in terms of hand flat knitting. If the knitter merely traverses the cam carriage backwards and forwards across the needle bed, a continuous fabric length will be knitted. However, if the knitter counts the traverses and alters the cam box settings at predetermined traverses, a garment-length sequence can be knitted.

Underwear may be knitted either in garment-length or fabric form, whereas *knitwear* is normally in garment-length form, usually knitted in machine gauges coarser than E 14. *Jersey wear* is cut and made-up from fabric usually knitted on large circular machines (26-inch or 30-inch diameter), although there are larger and smaller diameter machines used. Generally, gauges are finer than E 14.

8.1.1 Fabric machines

Large diameter, circular, latch needle machines (also known as *yardgoods* or *piece goods*, machines) knit fabric, at high speed, that is manually cut away from the machine (usually in roll form) after a convenient length has been knitted. Most fabric is knitted on circular machines, either single-cylinder (*single jersey*) or cylinder and dial (*double jersey*), of the revolving needle cylinder type, because of their high speed and productive efficiency.

Skechers EX1050
Skechers v Nike

Circular machines employing bearded needles are now obsolete. Although sinkerwheel and loopwheel frames could knit high quality speciality fabrics, their production rates were uncompetitive.

Unless used in tubular body-width, the fabric tube requires splitting into open-width. It is finished on continuous finishing equipment and is cut-and-sewn into garments, or it is used for household and technical fabrics. The productivity, versatility and patterning facilities of fabric machines vary considerably. Generally, cam settings and needle set-outs are not altered during the knitting of the fabric (see also Chapter 13, *The production of weft knitted fabric*).

8.1.2 Garment-length machines

Garment-length machines include straight bar frames, most flats, hosiery, legwear and glove machines, and circular garment machines including *sweater strip* machines, producing knitwear, outerwear and underwear. On these machines, the garment sequence control with the timing/counting device, collectively termed '*the machine control*', automatically initiates any alteration to the other facilities on the machine needed to knit a garment-length construction sequence instead of a continuous fabric.

This machine control may have to initiate correctly-timed changes in some or all of the following: cam-settings, needle set-outs, feeders and machine speeds. It must be able to override and cancel the effect of the patterning mechanism in rib borders and be easily adjustable for different garment sizes.

Also the *fabric take down* mechanism must be more sophisticated than for continuous fabric knitting. It has to adapt to varying rates of production during the knitting of the sequence and, on some machines, be able to assist both in the setting-up on empty needles and the take away of separate garments or pieces on completion of the sequence.

Garments may be knitted to size either in tubular or open-width; in the latter case more than one garment panel may be knitted simultaneously across the knitting bed. Large-diameter circular machines and wide V-bed flat machines can knit garment blanks that are later split into two or more garment widths (*blanket-width* knitting) (see also Chapter 20, *Circular garment-length machines*).

8.2 Knitting welts and rib borders

Garment-length knitting sequences vary considerably. The simplest circular garment machines knit repeat sequences of rib borders and body panels in a continuous structure at high speed. This structure requires cutting into garment lengths and seaming to produce a secure welt edge.

Most garment machines knit some form of secure welt edge at the start of the garment sequence and either a 'knitted-in' separation course (draw-thread or dissolving thread) or 'press-off' separation between each garment piece. In the latter case, the machine must be capable of commencing knitting of the next garment length on empty needles.

Shaping of flat garment panels is either in the form of cut edges or in the form of knitted selvedges (in the case of reciprocating knitting on a flat machine). The amount of shape introduced into the garment also varies; in some cases this is

Skechers EX1050
Skechers v Nike

achieved entirely by the cutting and making-up operation, in others it is by stitch shaping, stitch length variation, loop transfer and fashioning, held stitches or reciprocation.

8.3 Integral knitting

Whereas garments cut from fabric are completely assembled during seaming, others require varying amounts of making-up. *Integrally knitted* articles or '*whole garments*' are completely assembled on the knitting machine and require no further making-up operations off the machine.

Some V-bed glove knitting machines are of this type, as are some hosiery machines with integral toe-closing facilities. Some V-bed flat machines can knit complete garments in tubular form [1].

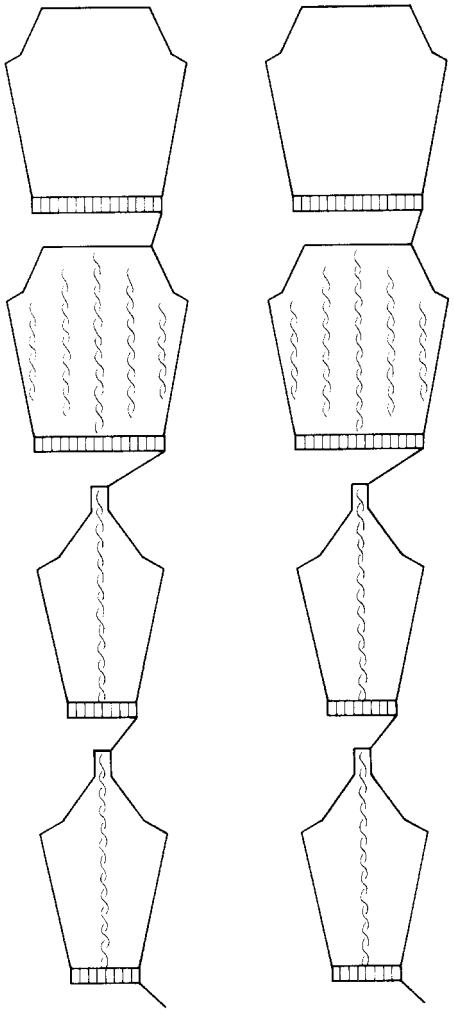

Fig. 8.1 Sequential knitting.

Skechers EX1050
Skechers v Nike

The advantages of this technique include savings in making-up machinery, space and labour, and reductions in the production sequence. Disadvantages include increased costs and complexity of the knitting machine and a possible reduction in its versatility and flexibility.

Certain electronically-controlled straight bar and V-bed flat machines can now be programmed to carry out a sequence of knitting a front, a back and two sleeves in turn thus using the same yarn and stitch lengths. Programming *sequential knitting* requires adequate computer memory and gives the advantages of quick response, less work in progress and better matching of component panels (Fig. 8.1).

8.4 The three classes of weft knitting machines

The three main groups of weft knitting machinery may broadly be classified as either straight bar frames, flats, or circulars, according to their frame design and needle bed arrangement.

8.4.1 Straight bar frame machines

Straight bar frames are a specific type of machine having a vertical bar of bearded needles whose movement is controlled by circular engineering cams attached to a revolving cam-shaft in the base of the machine. The length of the machine is divided into a number of knitting heads ('*sections*' or '*divisions*') and each head is capable of knitting a separate but identically-dimensioned fashion-shaped garment panel.

The needles press their beards against a fixed pressing edge; loop formation prior to intermeshing is achieved by individually horizontally-moving loop-forming sinkers, and knock-over occurs when the needles descend below the knock-over bits.

At either edge of each knitting head, a group of rackably-controlled points transfer loops to fashion shape the garment panel at the selvedges by widening or narrowing the knitting width. On completion of the garment panel, it is *pressed-off* the needles.

As straight bar frames have a single needle bar, they are unable to knit rib welts. A few rib frames (with a horizontal as well as a vertical needle bar) were built, but they were too slow and complex to become accepted. The same situation arose with the *rib-to-plain frame*, which had an auxiliary needle bed and was designed to knit a rib border after which only the vertical needle bar continued knitting for the plain knit body panel.

The welt and border sequence at the beginning of the panel was achieved by one of the two following methods:

1 Knitting a rib border fabric and welt on a separate V-bed flat machine, running it onto the empty needles of the frame and then commencing to knit the body panel onto the rib.
2 Employing a welt-turning device on the frame to produce a double thickness plain fabric. This method is more popular in the USA. It is the only method of knitting welts on fully-fashioned stockings.

Straight bar frames are long, capital-expensive machines that, because of their multi-sections and in spite of their intermittent knitting action, are highly productive in a very narrow sphere of garment manufacture. The knitting width is rather restricted

Skechers EX1050
Skechers v Nike

and fashion tends not to encourage full exploitation of the fashion shaping and stitch-transfer patterning potential of the machines.

The machines are noted for their production of high-quality garments as a result of the gentle knitting action, low fabric tension and fashion shaping, which reduces the waste of expensive yarn during cutting and is emphasised on the garments by carefully-positioned fashion marks.

The straight bar frame is the only bearded needle weft knitting machine that is still commercially viable, although it now faces serious competition from electronically-controlled V-bed flat machines (see also Chapter 17).

8.4.2 Flat machines

The typical flat machine has two stationary beds arranged in an inverted V formation. Latch needles and other elements slide in the tricks during the knitting action. Their butts project and are controlled as they pass through the tracks formed by the angular cams of a bi-directional cam system. It is attached to the underside of a carriage that, with its selected yarn carriers, traverses in a reciprocating manner across the machine width (Fig. 8.2).

The machines range from hand-propelled and -manipulated models to automated, electronically-controlled, power-driven machines.

The classes of flat machines are:

1 the V-bed flat machines, which form by far the largest class;
2 the flat-bed purl machines, which employ double-headed needles;

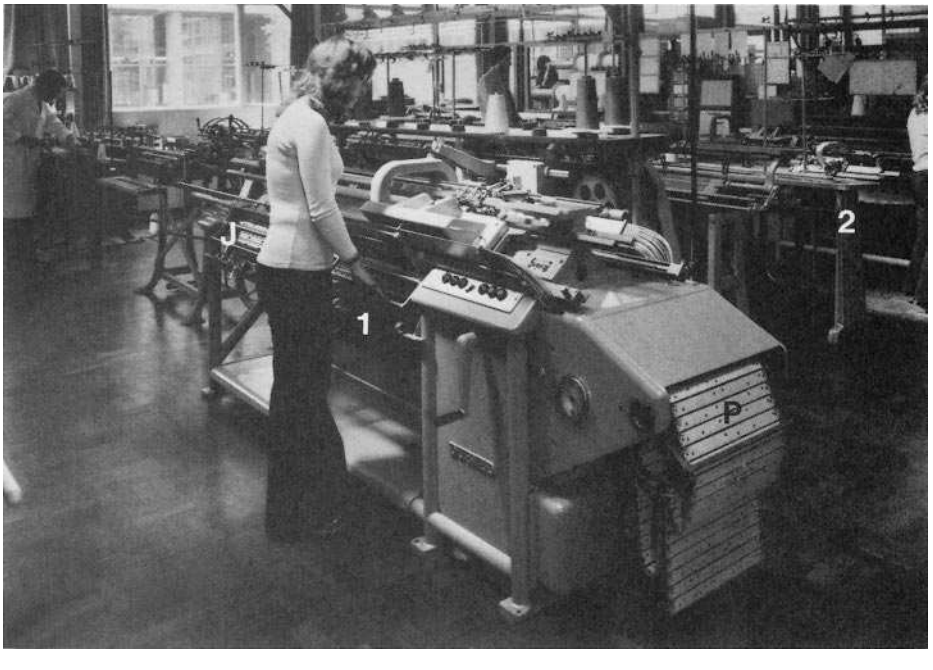

Fig. 8.2 Mechanically controlled flat knitting machines. 1 = jacquard power flat; 2 = hand flat; J = jacquard selection steels; P = paste board movement cards.

Skechers EX1050
Skechers v Nike

3 machines having a single bed of needles, which include domestic models and a few hand-manipulated intarsia machines; and
4 the unidirectional, multi-carriage ('Diamant') machines, which are no longer built.

As with all knitting machines, there is a separate cam system for each bed; the two systems are linked together by a bow, or bridge, that passes across from one needle bed to the other. The systems for each needle bed are symmetrically arranged so that knitting, and in some cases loop transfer, may be achieved in either direction of carriage traverse.

The intermittent action of the carriage traverse and its low number of knitting heads (one to four) and cam systems (often only two to six, with a maximum of eight) reduces productivity but enables major cam changes to occur when the carriage is clear of the active needles.

The flat machine is the most versatile of the weft knitting machines; its stitch potential includes needle selection on one or both beds, racked stitches, needle-out designs, striping, tubular knitting, changes of knitting width, and loop transfer; a wide range of yarn counts may be knitted for each machine gauge, including a number of ends of yarn at each knitting system; the stitch length range is also wide; and there is the possibility of changing the machine gauge. The operation and supervision of the machines of the simpler type are less arduous than for other weft knitting machines. The number of garments or panels knitted across the machine depends upon the knitting width, yarn carrier arrangement, yarn path and yarn package accommodation.

Articles knitted on flat machines range from trimmings, edgings and collars, to shaped panels, integrally-knitted garment pieces, integrally-knitted complete garments and other articles. (see also Chapter 19, *Automatic power flat knitting*).

8.4.3 Circular machines

The term 'circular' covers all those weft knitting machines whose needle beds are arranged in circular cylinders and/or dials, including latch, bearded, or (very occasionally) compound needle machinery, knitting a wide range of fabric structures, garments, hosiery and other articles in a variety of diameters. Circular garment-length machines are either of body size or larger (Fig. 8.3), having a cylinder and dial arrangement, single cylinder or double cylinder, as is also the case with small diameter machines for hosiery (Fig. 8.4).

During the last 200 years, numerous inventors have assisted the development of circular weft knitting technology towards its present state of sophistication and diversity [2]. Whilst *Decroix's* patent of 1798 has been considered to be the first for a circular frame, *Marc Brunel's* 'tricoteur' of 1816 is probably the first practical working example of such a frame. Efforts were concentrated during the subsequent 30 years on improving the knitting action of this frame, with its revolving dial of fixed bearded needles radiating horizontally outwards and having their beards uppermost.

In 1845, *Fouquet* applied his '*Stuttgarter Mailleuse*' wheels to the frame and their individually moving, loop-forming sinkers provided the sinker frame with the capability of knitting high-quality fabric, a possibility later exploited by *Terrot* who improved the frame's patterning facilities and marketed it throughout the world.

Skechers EX1050
Skechers v Nike

Fig. 8.3 Mechanically controlled circular knitting machines. 1 = plain cylinder and dial fabric machine; 2 = rib jacquard machine; 3 = double cylinder purl garment length machine.

Fig. 8.4 Mechanically controlled hosiery machines. 1 = seamless hose machine; 2 = double cylinder half-hose machine.

Skechers EX1050
Skechers v Nike

In 1849, *Moses Mellor* produced a revolving circular frame with vertically-arranged bearded needles facing outwards from the needle circle; this later developed to become the loopwheel frame. In the same year, *Matthew Townsend* patented uses for the latch needle and by 1855, *Pepper* had produced a commercial machine with a single set of movable latch needles and two feed points. This was soon followed by *Aiken's* circular latch needle rib machine of 1859, which also contained movable needles. *Henry Griswold* took latch needle knitting a stage further by moving the needles individually and directly via their bent shanks in his world-famous, hand-operated, revolving cam-box, small-diameter sock machine of 1878 (Fig. 4.4).

The first small-diameter, revolving-cylinder machine appeared about 1907 but there was still much strenuous effort required by machine builders and needle manufacturers before circular latch needle machines could seriously begin to challenge bearded needle straight and circular machines in the production of consistently high-quality knitted articles.

References

1. MILLINGTON, J., The automated production of complete hosiery, knitwear and bodywear garments, IFKT Conference, *Knit. Int.*, (Oct. 1998), 56–60.
2. SCHWABE, C., Thoughts on the history of the circular knitting machine, *Knit. Tech.*, Vol. 11, (1989), No. 3, 186–9.

Further information

ANON., Knitting machinery: a guide to primary types, *Knit. O'wr Yr Bk*, (1970), 97–9.
HURD, J. C. H., Towards automation in hosiery, knitwear and knitted fabric, *Text. Inst. and Ind.*, (1974), 12, (4), 113 (4 pages).
LANCASHIRE, J. B., 75 years of weft knitting history, *Hos. Trade J.*, (Jan. 1969), 178–86.
SPENCER, D. J., Knitwear machinery, *Knit. Int.*, (1994), Aug., 36–7.
SPENCER, D. J., Weft knitting at ITMA '99, *ATA Asia*, (Jan. 2000).

Skechers EX1050
Skechers v Nike

9

Stitches produced by varying the sequence of the needle loop intermeshing

9.1 Knitted stitches

Weft knitted stitches described so far have been composed entirely of knitted loops. A *knitted loop stitch* is produced when a needle receives a new loop and knocks-over the old loop that it held from the previous knitting cycle. The old loop then becomes a needle loop of normal configuration.

Other types of stitch may be produced on each of the four-needle arrangement base structures by varying the timing of the intermeshing sequence of the old and new loops. These stitches may be deliberately selected as part of the design of the weft knitted structure or they may be produced accidentally by a malfunction of the knitting action so that they occur as fabric faults. When these stitches are deliberately selected, a preponderance of knitted loop stitches is necessary within the structure in order to maintain its requisite physical properties.

The needles generally produce knitted loop stitches prior to the commencement, and at the termination, of these selected stitches, and there are usually certain needles that are knitting normally during the same cycles as those in which these stitches are produced.

Apart from the knitted loop stitch, the two most commonly-produced stitches are the *float stitch* and the *tuck stitch*. Each is produced with a *held loop* and shows its own particular loop most clearly on the reverse side of the stitch because the limbs of the held loop cover it from view on the face side.

9.2 The held loop

A *held loop* (Fig. 9.1) is an old loop that the needle has retained. It is not released and knocked-over until the next, or a later, yarn feed. A held loop can only be retained by a needle for a limited number of knitting cycles before it is cast-off. A new loop is then drawn through it, otherwise the tension on the yarn in the held loop becomes excessive even though there is a tendency to rob yarn from adjacent loops in the same course.

Skechers EX1050
Skechers v Nike

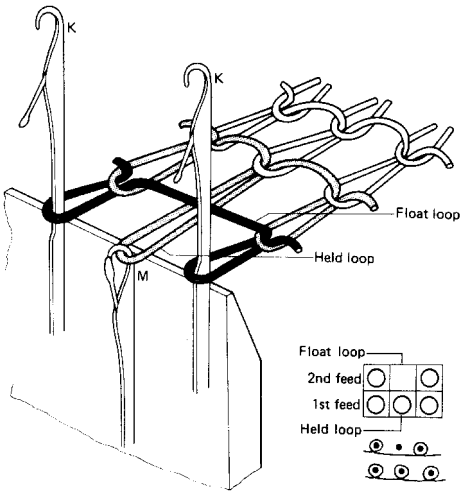

Fig. 9.1 Float stitch produced on a latch needle machine.

The limbs of the held loop are often elongated. They extend from its base, intermeshing in one course, to where its head is finally intermeshed a number of courses higher in the structure. Alongside it, in adjacent wales, there may be normally-knitted loops at each course.

A held loop may be incorporated into a held stitch without the production of tuck or miss stitches in either single- or double-faced structures.

In single-faced structures, it can only be produced on machines whose feeds or needles have a reciprocating action so that the yarn only passes across needles that are knitting, otherwise a float stitch would be produced. Held stitches of this type are used for producing three-dimensional shaping such as heel and toe pouches for footwear, held-loop shaping on flat machines, and designs in solid colour intarsia. Held stitches are produced in double-faced structures by holding loops on one bed whilst continuing to knit on the other, thus producing horizontal welt and cord effects.

9.3 The drop or press-off stitch

A *drop stitch fault* will result if a needle releases its old loop without receiving a new one. Sometimes this technique is used to achieve a press-off on all needles at the end of a garment-length sequence. A *drop stitch* or *press-off stitch* is used very occasionally in flat knitting to cause certain loops in a plain structure to be much larger than the rest. Knitting takes place on only one bed of needles and selected needles in the other bed pick up loops that are immediately pressed-off by not receiving yarn at the next feed.

The yarn from the pressed-off loops flows into the adjacent loops in the other bed, making them larger and giving the impression of a much coarser gauge. Drop stitch wales are sometimes used to provide a guide for the cutting operation. Generally, a secure structure is only produced when a needle retains its old loop if it does not receive a new loop.

Skechers EX1050
Skechers v Nike

Open-work 'crochet' type designs (also termed *drop-stitch*, *press-off*, or *latch-opener fabrics*) can be produced in single jersey by carefully pressing-off the loops of selected groups of needles, then recommencing knitting on the empty needles. Off-set yarn feeding is employed, the yarn feeders being collectively repositioned to feed the yarn from outside the needle-line across the front of the ascending needle hooks. The yarn itself brushes open the closed latches and does not damage the needles, unlike conventional steel point latch-openers.

An example produced on a E 28 *Monarch* machine has 4 feeds knitting plain with 1/30's cotton. Feeder 5 is knitted with a minimum stitch length and two ends of yarn to lock-in the following course. Feeder 6 is a slack course, knitted at half the normal tension and half the normal yarn count. It is jacquard-selected to produce a course of open-work pattern by pressing-off on these needles. The pick-up course is then knitted at high tension to avoid drop stitches and ladders at the edges of the pressed-off areas.

9.4 The float stitch

A *float stitch* or *welt stitch* (Fig. 9.1) is composed of a held loop, one or more float loops and knitted loops. It is produced when a needle (M) holding its old loop fails to receive the new yarn that passes, as a float loop, to the back of the needle and to the reverse side of the resultant stitch, joining together the two nearest needle loops knitted from it.

In Fig. 9.2, the float stitch shows the missed yarn floating freely on the reverse side of the held loop. (This is the technical back of single-jersey structures but is the inside of rib and interlock structures.) The float extends from the base of one knitted or tucked loop to the next, and is notated either as an empty square or as a by-passed point. It is assumed that the held loop extends into the courses above until a knitted loop is indicated in that wale.

A single float stitch has the appearance of a U-shape on the reverse of the stitch. Structures incorporating float stitches tend to exhibit faint horizontal lines. Float

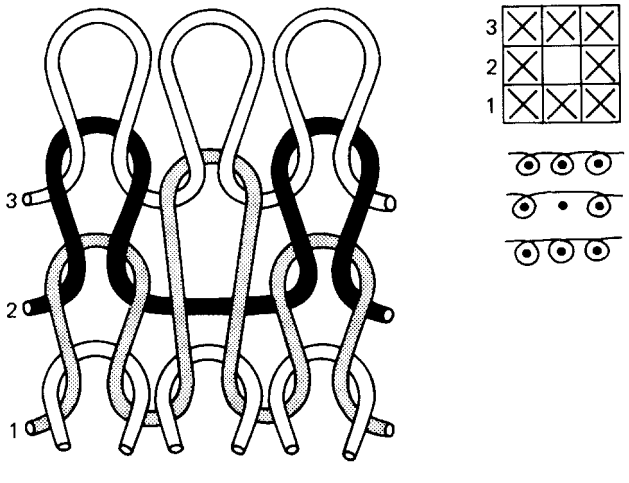

Fig. 9.2 Technical face of float stitch.

Skechers EX1050
Skechers v Nike

stitch fabrics are narrower than equivalent all-knit fabrics because the wales are drawn closer together by the floats, thus reducing width-wise elasticity and improving fabric stability.

Under normal take-down tension and with normal yarn extensibility, the maximum number of successive floats on one needle is four. Six adjacent needles are usually the maximum number for a continuous float because of reduced elasticity and problems of snagged threads, especially in continuous-filament yarns and with coarse machine gauges.

A floating thread is useful for hiding an unwanted coloured yarn behind the face loop of a selected colour when producing jacquard design in face loop stitches of different colours (adjacent needle floating in shown in Fig. 9.8, successive floating on the same needle in Fig. 9.7). The miss stitch can occur accidentally as a fault due to incorrectly set yarn feeders.

9.5 Float plating

Float plating (Fig. 9.3) produces an open-work mesh structure in single jersey and involves feeding two yarns in a plating relationship to needles having forward hooks. A thick yarn (A), for example 30 denier, is fed at a high level and is received only by needles selected to that height. A fine yarn (B), possibly 15 denier, is fed at a lower level and is received and knitted by every needle.

Two-course fishnet is the most popular structure, having a repeat of two wales and four courses deep. At the first two feeders, odd needles (O) knit only the thin yarn and even needles (E) knit plated loops. At the next two feeders the sequence is reversed.

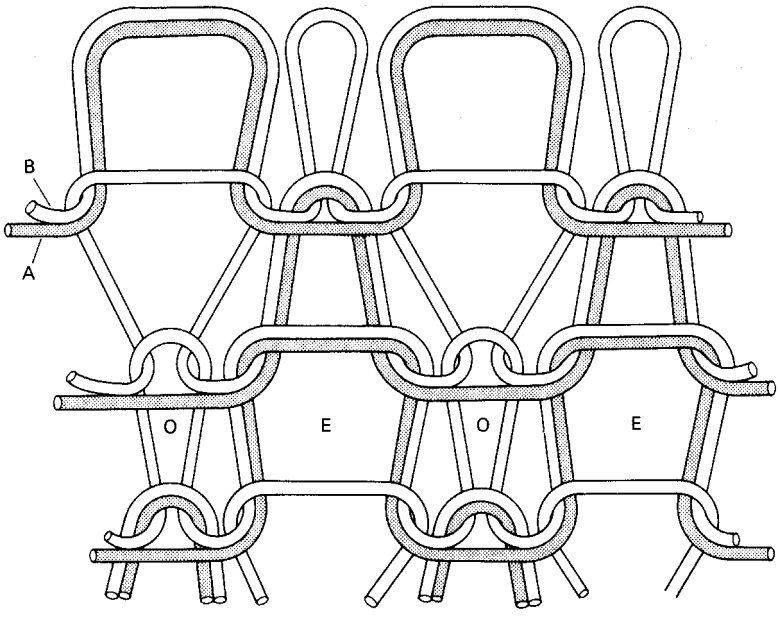

Fig. 9.3 Float plated fabric.

Skechers EX1050
Skechers v Nike

Knitting and missing of the thick yarn causes an expansion of alternate stitches. The two-course sequence may be extended to three or four courses and it is possible to plate the thick yarn on a needle selection basis. The structure has been used for ladder-resist shadow welts in stockings and for textured designs, as well as for underwear mesh structures on circular single-jersey machines [1] in gauges from E 14–24.

9.6 The tuck stitch

A *tuck stitch* is composed of a held loop, one or more tuck loops and knitted loops (Fig. 9.4). It is produced when a needle holding its loop (T) also receives the new loop, which becomes a tuck loop because it is not intermeshed through the old loop but is tucked in behind it on the reverse side of the stitch (Fig. 9.5). Its side limbs are therefore not restricted at their feet by the head of an old loop, so they can open outwards towards the two adjoining needle loops formed in the same course. The tuck loop thus assumes an inverted V or U-shaped configuration. The yarn passes from the sinker loops to the head that is intermeshed with the new loop of a course above it, so that the head of the tuck is on the reverse of the stitch.

The side limbs of tuck loops thus tend to show through onto the face between adjacent wales as they pass in front of sinker loops. Tuck stitch structures show a faint diagonal line effect on their surface.

In analysis, a tuck stitch is identified by the fact that its head is released as a hump shape immediately the needle loop above it is withdrawn. A knitted loop would be required to be separately withdrawn and a miss stitch would always be floating freely on the technical back.

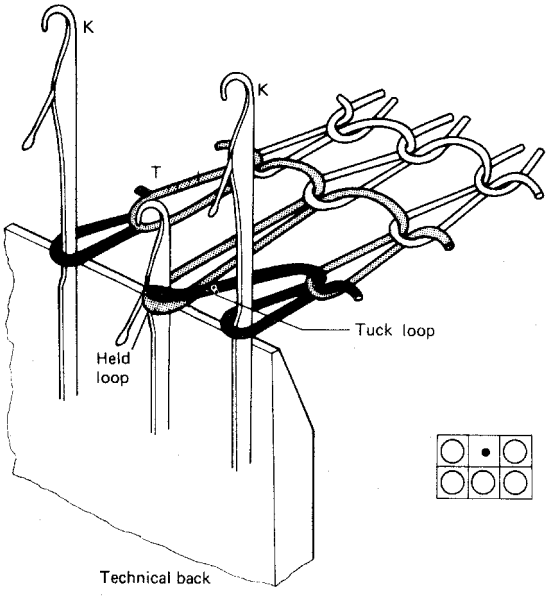

Fig. 9.4 Tuck stitch produced on a latch needle machine.

Skechers EX1050
Skechers v Nike

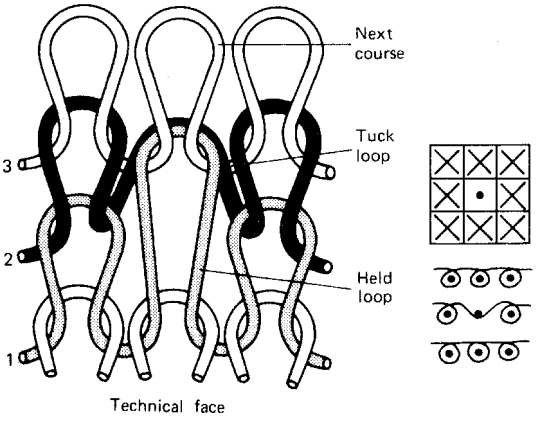

Fig. 9.5 Technical face of tuck stitch fabric.

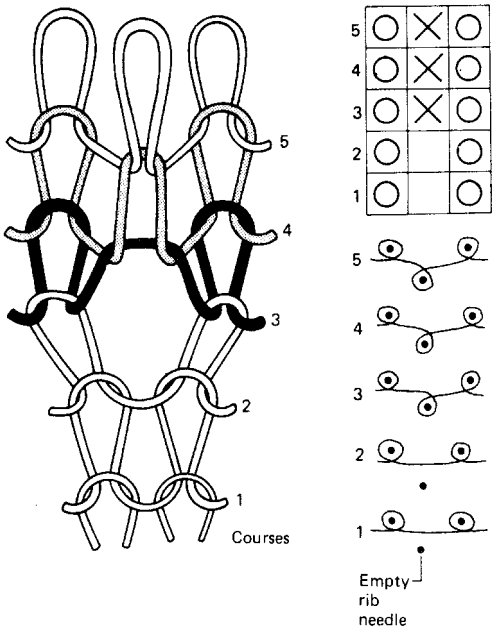

Fig. 9.6 Commencing knitting on an empty rib needle.

The tuck loop configuration can be produced by two different knitting sequences:

1 By commencing knitting on a previously empty needle (Fig. 9.6). As the needle was previously empty, there will be no loop in the wale to restrict the feet of the first loop to be knitted and, in fact, even the second loop tends to be wider than normal. The effect is clearly visible in the starting course of a welt. By introducing rib needles on a selective basis, an open-work pattern may be produced on a plain knit base.
2 By holding the old loop and then accumulating one or more new loops in the needle hook. Each new loop becomes a tuck loop as it and the held loop are knocked-over together at a later knitting cycle and a new loop is intermeshed

Skechers EX1050
Skechers v Nike

with them. This is the standard method of producing a tuck stitch in weft knitting (Fig. 9.4).

Successive tucks on the same needle are placed on top of each other at the back of the head of the held loop and each, in turn, assumes a straighter and more horizontal appearance and theoretically requires less yarn. Under normal conditions, up to four successive tucks can be accumulated before tension causes yarn rupture or needle damage. The limit is affected by machine design, needle hook size, yarn count, elasticity and fabric take-down tension (Fig. 9.7).

Each side of the head of a tuck loop is held by a sinker loop (S) from the course above (Fig. 9.9). When tucking occurs across two or more adjacent needles, the head of the tuck loop will float freely across between these two adjacent sinker loops, after which a sloping side limb will occur.

Dependent upon structural fineness, tucking over six adjacent needles is usually the maximum unit before snagging becomes a problem. (NB: Tucking across no more than two adjacent needles is generally the limit because the tuck is not secured at the middle wales when tucking across three or more needles.) For a greater number of adjacent needles, the accordion sequence (Section 10.4.3) where occasional tucks tie-in a floating thread, is preferred.

A tuck loop is notated either as a dot placed in a square or as a semi-circle over a point. A held loop is assumed to extend from the course below, up to the course where the next knitted loop is notated in that wale, as this is where it intermeshes.

Selective '*tucking in the hook*' (Fig. 9.10) is achieved on latch needle weft knit-

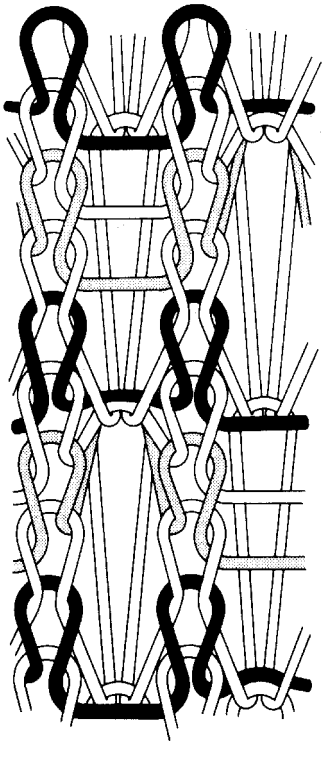

Fig. 9.7 Successive tucks and floats on the same rib needle.

Skechers EX1050
Skechers v Nike

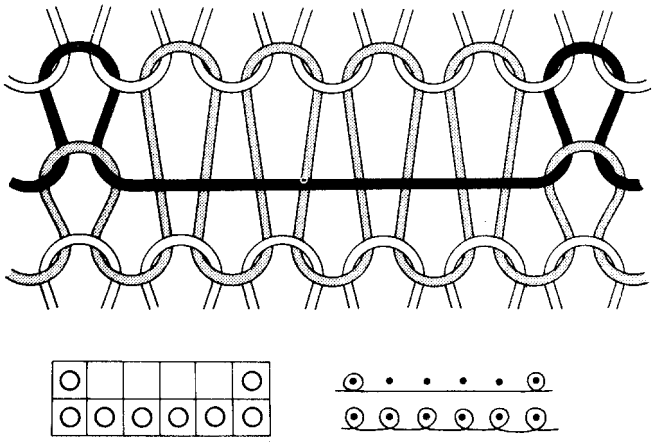

Fig. 9.8 Floating across four adjacent plain needles.

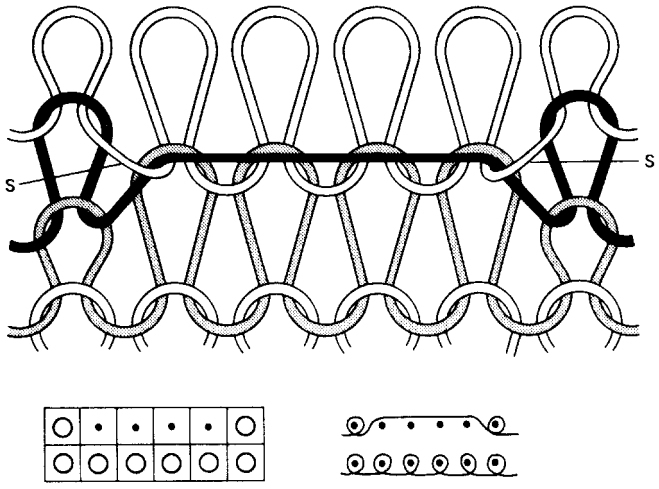

Fig. 9.9 Tucking over four adjacent plain needles.

ting machines by lifting the needle only half-way towards clearing height to tuck height. The old loop opens the latch but remains on the latch spoon and does not slide off onto the needle stem. It remains as a held loop in the needle hook where it is joined by the new loop, which becomes a tuck loop when the needle descends to knock-over.

The latch needle, because of its loop-controlled knitting action, is capable of being lifted to one of three stitch positions to produce either a *miss,* a *tuck* or a *knit stitch*; this is termed the *three step* or *three way technique* (Fig. 9.11).

On V-bed flat machines, raising cams, split into tuck and clearing height cams, are known as *cardigan cams*. They are not available on older machines so only collective '*tucking on the latch*' on all needles in one bed can be achieved. The stitch cam is raised so that the needles do not descend low enough to cast-off the held loops from the closed latches (Fig. 9.12). This is not a preferred technique because there

Skechers EX1050
Skechers v Nike

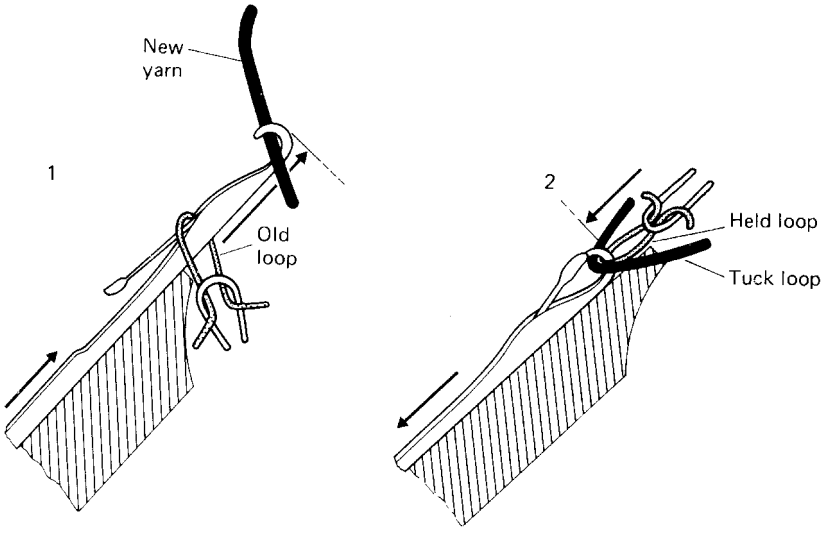

Fig. 9.10 Selective tucking in the hook.

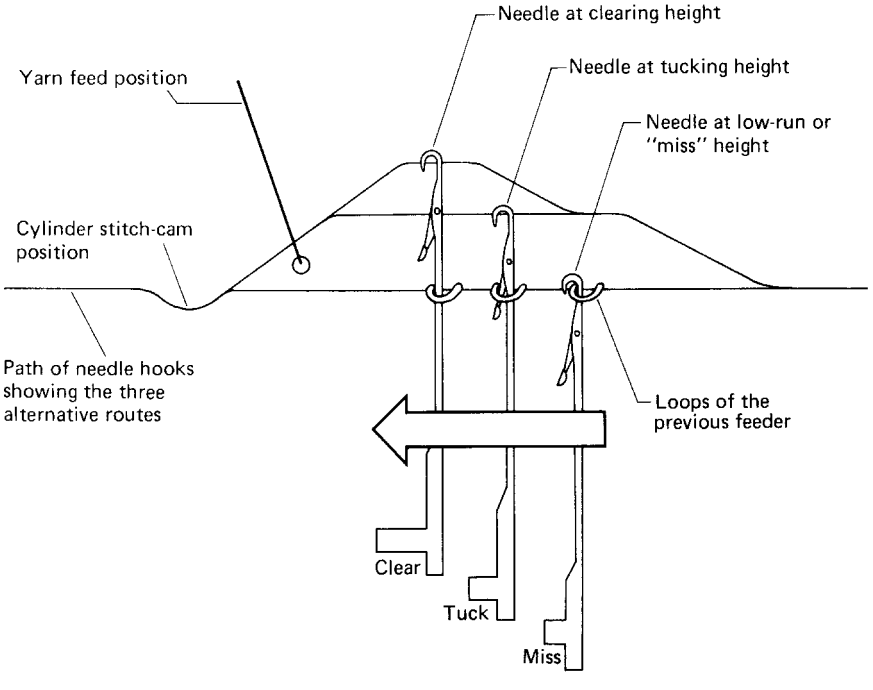

Fig. 9.11 Three step needle selection. The needles have been turned 90° in order to show the position of the latch in relationship with the loop of the previous feeder.

is no individual selection and there is the danger of the held loop slipping off and producing an intermeshed loop with the tuck, converting it into a knitted stitch.

The first tuck presser bearded needle frame was invented in Dublin in 1745. A bearded needle tucks when its beard is miss-pressed so that the old loop is not cast-off and remains as a held loop, inside the beard, with the newly-fed tuck loop.

Skechers EX1050
Skechers v Nike

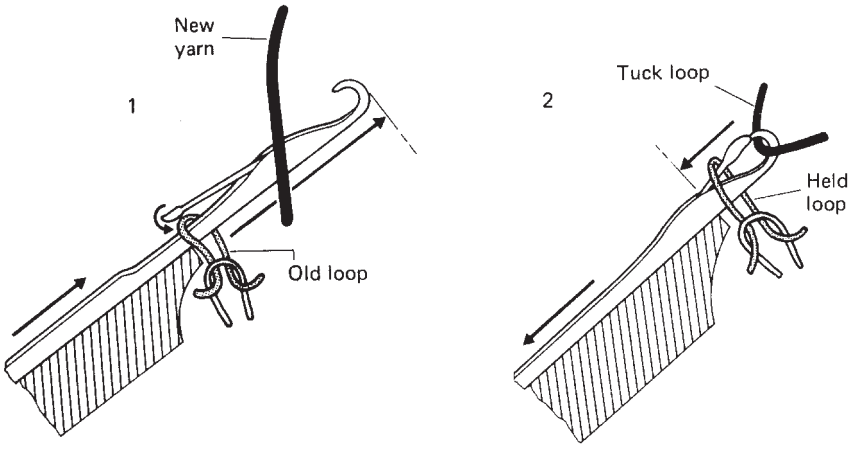

Fig. 9.12 Tucking on the latch.

Tucking for inlay may be achieved by deflecting certain needles during inlay feeding so that the yarn passes across the beards of the selected needles, forming a tuck instead of floating across their backs. Selective tucking requires cut-away pressing edges or individually controlled presser bits.

Tucking may occur accidentally as a result of stiff latches, imperfect pressing, imperfect knocking-over of old loops, or thick places in yarn.

Tuck loops reduce fabric length and length-wise elasticity because the higher yarn tension on the tuck and held loops causes them to rob yarn from adjacent knitted loops, making them smaller and providing greater stability and shape retention. Fabric width is increased because tuck loops pull the held loops downwards, causing them to spread outwards and make extra yarn available for width-wise extensibility. Fabric distortion and three-dimensional relief is caused by tuck stitch accumulation, displacement of wales, and by varying numbers of tuck and knitted stitches per wale.

Tuck stitches are employed in accordion fabrics to tie-in the long floats produced on the back of single-jersey knit/miss jacquard, thus reducing the problems of snagging that occur with filament yarns. The tuck stitch may also be employed to produce open-work effects, improve the surface texture, enable stitch-shaping, reinforce, join double-faced fabrics, improve ladder-resistance and produce mock fashion marks.

Reference

1. GOADBY, D. R., The Camber single jersey Louvnit machine, *Knit. Int.,* (Dec. 1978), 46–7.

Further information

ANON., Tuck loops in jacquard knitting, *Hos. Trade J.*, (April 1963), 123–8.
LANCASHIRE, J. B., Uses of the tuck stitch, *Hos. Trade J.*, (June 1961), 158–61.

Skechers EX1050
Skechers v Nike

10

Coloured stitch designs in weft knitting

Colour is one of the five ingredients of fashion, the other four being style, silhouette, texture and pattern [1].

Ornamentation for design purposes may be introduced at the fibre, yarn, or dyeing and finishing stage, as well as at the knitting stage. Apart from different colours, it may take the form of sculptured or surface interest. In fibre form it may include a variation of fibre diameter, length, cross-section, dye uptake, shrinkage, or elastic properties. In yarn form it can include fancy twist and novelty yarns, as well as the combined use of yarns produced by different spinning or texturing processes. The dyeing process, which provides the possibility of differential and cross-dyeing of fabrics composed of more than one type of fibre, may occur at any point in manufacturing from fibre to finished article [2].

The finishing process may also utilise heat or chemically-derived shaping. Finally, printing and particularly transfer printing [3] can introduce colour designs onto plain colour surfaces, whilst embroidery stitching may provide relief designs in one or more colours (usually onto garment panels or socks).

The finishing process can completely transform the appearance of a relatively uninteresting structure, either as an overall effect or on a selective basis.

The knitting of stitch designs always involves a loss of productivity compared with the knitting of plain, non-patterned structures. Machine speeds are lower, less feeds can generally be accommodated, efficiency is less, design changes are time-consuming and dependent upon technique and machine type, and, in many cases, more than one feeder course is required to knit each pattern row.

At the knitting stage, apart from stitches for surface interest and other functional purposes, four techniques may, if required, be employed to produce designs in coloured stitches. These are *horizontal striping, intarsia*, *plating*, and *individual jacquard stitch selection*.

Skechers EX1050
Skechers v Nike

10.1 Horizontal striping

Horizontal striping provides the facility to select one from a choice of several coloured yarns at a machine feed position (Fig. 10.1). Even without striping selection facilities, by careful arrangement of the packages of coloured yarns on a large-diameter, multi-feeder machine, an elaborate sequence of stripes having a depth that is repeated at each machine revolution, is obtained.

However, machines with few feeds (particularly garment length and hosiery machines) would have severely restricted capabilities without the facility of yarn changing by striping finger selection, which can provide a choice of one from four or five yarns at a particular feed point during each machine revolution. The choice of yarns may include elastic yarn and separation yarn as well as a choice of colour.

On flat and straight bar frames, yarn carrier changes can take place during the pause in knitting on completion of each traverse. On circular machines, striping finger changes must occur whilst the needle cylinders or cam boxes rotate. A slight overlap of the two interchanging yarns is essential to maintain a continuous yarn flow at the knitting point.

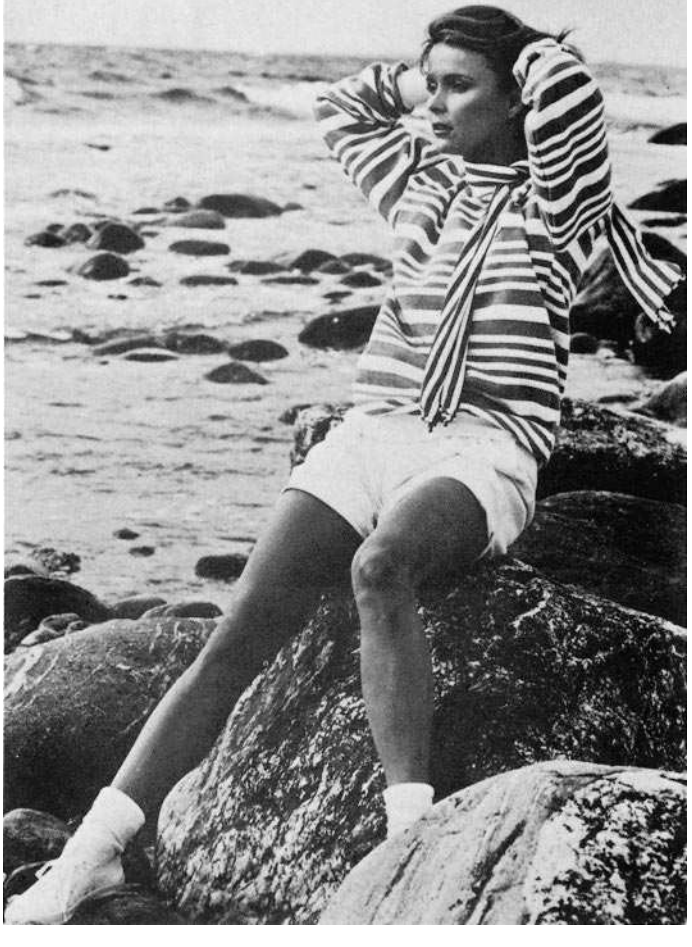

Fig. 10.1 An attractive use of horizontal striping [International Institute for Cotton].

Skechers EX1050
Skechers v Nike

As the yarn finger is withdrawn from the needle circle with its yarn cut free and securely trapped and held for later re-selection, the newly-selected finger in the same unit or box is simultaneously introduced into the needle line. Its trapper releases the held cut end of yarn, allowing it to flow from its package to the needles. The facility of an individual cutter and trapper for each yarn in the unit is mechanically more complex but it enables a yarn as thin as 30 denier nylon to be trapped alongside a yarn as thick as 5/1's (NeB) cotton.

Although striping is useful for the introduction of a draw-thread in a full-course and splicing reinforcement on a part-course basis, the mechanism is not precise enough for individual stitch patterning. Its speed of operation and versatility has, however, been improved by employing electronic control so that the *engineered* placing of stripes of specific widths in the length of a garment is now possible [4,5].

10.2 Intarsia

Intarsia (Figures 10.2 and 10.3) is a special method of producing designs in knitted loops that form self-contained areas of pure colours. Unequalled colour definition

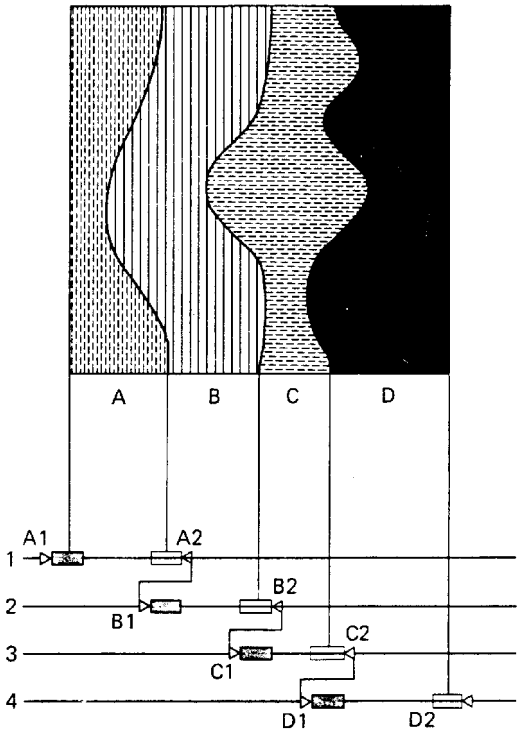

Fig. 10.2 Yarn carrier positioning for intarsia. Four zones are illustrated. Each colour (A, B, C and D) is supplied by its own yarn carrier, which travels only between its own carrier stops (which are capable of being repositioned). All carriers traverse in the same direction at a particular course. The stop blocks of adjoining colour zones (e.g. A2 and B1) are linked together so that when one yarn carrier traverse is decreased (for example, towards the left) the adjoining carrier traverse is correspondingly increased.

Skechers EX1050
Skechers v Nike

Fig. 10.3 Examples of intarsia designs knitted on an electronic V-bed machine [Shima Seiki].

is achieved, with a large number of colours and no adverse effect on the physical properties of the structure such as reduction of extensibility.

Careful positioning of the yarn carriers and control of the extent of traverse of each from course to course determines the design and integration of the coloured areas into a cohesively-knitted structure. Such a cohesive structure is achieved by slight overlap of adjoining areas and the intermeshing of loops in each wale. As well as plain and 1×1 rib, other stitches such as purl or cable may be utilised.

A design row of intarsia is divided into adjoining blocks of contiguous wales. Each block of needles knits a separate coloured area (*field*), for which it is exclusively supplied with its own particular yarn (Fig. 10.2). The yarn then passes to the course above and does not float across the backs of needle loops. If there are further

Skechers EX1050
Skechers v Nike

blocks of needles in the design row requiring the same colour, each will be supplied by a separate yarn.

The knitting action and supply of yarn for intarsia is from left-to-right at one course, and right-to-left at the next. This is the normal reciprocating movement found on all V-bed flat machines and straight bar frames. On circular, single-cylinder sock machines, it is necessary to oscillate the cylinder (similarly to heel knitting) instead of continuously revolving it.

Traditionally, intarsia was skilfully knitted by hand, laying the yarns into the hooks of each block of adjacent needles as they are cammed outwards, on hand-operated stationary needle bed machines such as the circular *Griswold* type sock machine or the flat bed *Dubied* model 00 machine.

High-quality woollen Argyle tartan socks and sweaters can be knitted, consisting of diamond-shaped designs crossed diagonally by one wale wide stripes termed *overchecks*.

Only on a hand-manipulated flat machine with hand-feeding of the yarn can a *pure join* of adjoining areas be achieved. As the edge yarn of an area rises to the next course, it crosses over and links to the edge yarn of the adjacent colour area.

Most automatic methods of knitting intarsia entail some way of overlapping (encroachment) of adjoining areas into each other, towards the right at one course and towards the left at the next. A slight saw-tooth effect across one, two, or more wales is thus produced at the join, which should be kept to a minimum, and the plating of knitted or tuck loops can be employed. Argyle socks can be knitted automatically with plated overchecks.

Intarsia designs for full-fashioned sweaters have generally been balanced geometrical shapes because of the screw spindle control of the carrier stops. However, intarsia patterning as an optional extra on electronic V-bed flat machines is becoming increasingly sophisticated (Fig. 10.3), with precise yarn positioning, needle selection and carrier traversing that may be controlled electronically.

Although intarsia ensures that expensive yarns are fully utilised on the surface of the design, it is only generally suitable for geometric type designs (although they no longer need to be symmetrical) and not for figure designs in small areas. It is a comparatively slow, expensive, specialised technique that is subject to the whims of fashion.

10.3 Plating

Plating is widely used for single jersey, plush, open-work, float and interlock fleecy. However, with the exception of *embroidery motif plating*, the use of coloured yarns to produce plated designs has diminished in weft knitting. Plating requires great precision and offers limited colour choice with poor definition compared with the improved facilities offered by jacquard knit and miss needle selection of coloured stitches.

In *reverse plating*, two yarns (usually of contrasting colour) are caused to change over positions at the needle head by controlled movement of specially-shaped sinkers or yarn feed guides.

In *sectional plating* (straight bar frames), the ground yarn knits continuously across the full width whilst the plating carrier tubes, set lower into the needles,

Skechers EX1050
Skechers v Nike

supply yarn in a reciprocating movement to a particular group of needles, so that the colour shows on the face.

The one major advance in pattern plating coloured yarns has occurred in *weft embroidery motif plating* on electronically-controlled, single-cylinder hosiery machines knitting so-called 'computer socks'. The main yarn is a fine, undyed filament nylon, which is continuously knitted throughout the sock. At each feed there is a group of coloured bulked yarns. A selected yarn is fed, in a plating relationship with the main yarn, to one or a group of adjacent needles according to the required design. The next adjacent needle(s) will receive a different coloured yarn, selected from the same group of yarns.

All the needles will thus receive a plated bulked yarn of some colour, whether they are knitting the motif or the ground colour. The designs appear to be pure colour intarsia because the main yarn is fine and is hidden by the plated, coloured bulked yarns. There are no floating threads on the inside of the sock because the yarn is cut and trapped when not in use. Care must be taken to ensure that the pattern threads are securely retained in the fabric.

Simple motif embroidery designs using warp threads have, for many years, been *wrap-knitted* on the side panels of double-cylinder half-hose. The technique is slow and less popular than weft embroidery patterning.

10.4 Individual stitch selection

Individual stitch selection is the most versatile and widely-employed method of knitting designs in colour, or different types of stitches in self-colour. It is based on the relative positioning of an element during a knitting cycle determining which stitch, from a choice of two or more, is produced in its corresponding wale at a particular feeder course of a machine revolution or traverse.

Latch needle weft knitting machines are especially suitable because their individually tricked and butted elements offer the possibility of independent movement. Depending upon machine and element design, and cam arrangement, one or more of the following stitches may be produced – knit, tuck, miss, plated, plush, inlay, loop transfer and purl needle transfer.

The following rules apply to individual element selection of stitches:

1 If each set of elements has butts of identical length and position, and the cam-track is fixed, each element will follow the same path and produce an identical stitch in its corresponding wale at that feeder course (Fig. 3.4).
2 If each feed in the machine has the same arrangement of fixed cams, identical stitches will be knitted in each wale at every feeder course (Fig. 7.1).
3 When the butts of adjacent elements are caused to follow different paths through the same cam system, different stitches may be knitted in adjacent wales of the same feeder course (Fig. 9.11).
4 When butts of the same element are caused to follow a different path through successive cam systems in the same machine, more than one type of stitch may be produced in the same wale (Fig. 9.4).
5 Unless the device is of the variable type that can present a different selection commencing in the first wale of each traverse or machine revolution, the design depth in feeder courses will be the number of operative feeds on the machine.

Skechers EX1050
Skechers v Nike

If the device is variable, the design depth will be increased by a multiple of the number of different selections available per device (see Chapter 11).

10.4.1 Weft knitted jacquard

Weft knitted jacquard designs are built up from face loops in selected colours on a base fabric of either single jersey, 1 × 1 rib, or links-links (purl). The face loop needles are individually selected, usually each only once per pattern row, to rise and take one yarn from a sequence of different coloured yarn feeds on a knit or miss basis.

In *two-colour jacquard*, certain needles will be selected to knit colour A from the first feed and, at the next feed, there will be a negative selection with the remaining needles being selected to knit colour B. The face loops of two feed courses thus combine to produce one complete row of face pattern loops.

In *three-colour jacquard*, each needle will be selected to knit once and miss twice at a sequence of feeds, so that three feeder courses will produce one design row. The greater the number of colours in a design row, the lower the rate of productivity in design rows per machine revolution or traverse, assuming striping is not employed.

If striping is employed with jacquard selection, different colours can be selected at different design rows so that there are more colours in the total design than in one design row. For example, a four-feed machine with four-colour striping at each feed could knit 4 colours per design row but have a total of 16 colours in the design depth.

10.4.2 Single-jersey jacquard

Single-jersey jacquard (Fig. 10.4) in knit and miss stitches produces clear stitch definition, exemplified by the *fair isle designs* used in woollen cardigans and pullovers. The floats to some extent reduce the lateral extensibility of the garments and, when continuous filament yarns are used in gauges of E 18 or less, the floats on the technical back can create problems of snagging. Single-cylinder sock machines may knit 1 × 1 *float stitch jacquard*. Odd needles are selected to knit and miss whilst even

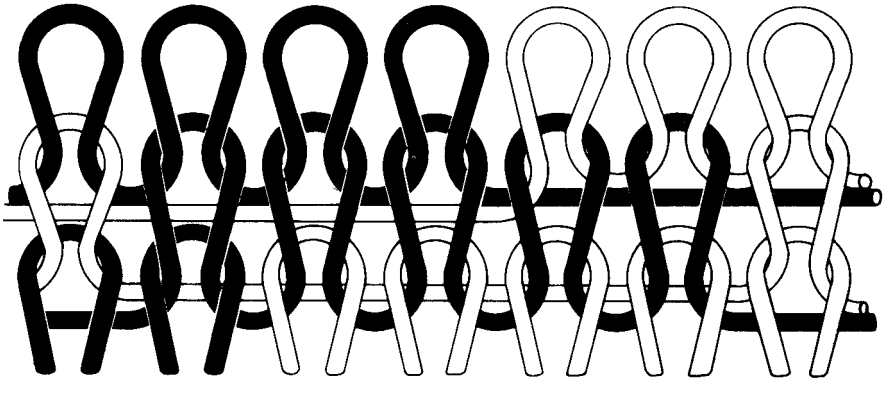

Fig. 10.4 Single jersey jacquard.

Skechers EX1050
Skechers v Nike

needles knit at every feed, thus reducing the coloured yarn floats on the technical back to a single wale. The clarity of the coloured pattern area is only slightly impaired.

10.4.3 Accordion fabric

Accordion fabric (Fig. 10.5) is single jersey with the long floats held in place on the technical back by tuck stitches. It was originally developed using knit and miss pattern wheel selection (Section 11.11). Needles required to tuck (if not selected to knit) were provided with an extra butt, in line with a tuck cam placed immediately after the pattern wheel selection.

In *straight accordion*, every odd needle was of this type, so every odd needle tucked when not selected to knit.

Alternative accordion provides a better distribution of tuck stitches; odd needles had a tuck butt position in line with cams placed at odd feeders, and even needles had another butt position for cams at even feeders. With both these types of accordion, tuck stitches occur close together, causing distortion of face loops and allowing unselected colours to 'grin' through between adjacent wales onto the face.

The third type of accordion – *selective accordion* – is most widely used, but it requires a three-step pattern wheel or other selection device that can select the tuck loops so that they are carefully distributed to create the minimum of stitch distortion on the face of the design.

10.4.4 Rib jacquard

Rib jacquard designs are achieved by cylinder needle selection. The dial needles knit the backing and eliminate floats that occur when cylinder needles only are selected to miss (Fig. 10.6). Tuck stitches are therefore unnecessary. There are two groups of these fabrics – flat jacquards and relief designs.

Flat jacquards are described by the size of the design area followed by the number of colours in one complete pattern row of loops and the type of backing.

On circular machines, the selection is on the cylinder needles only and the dial

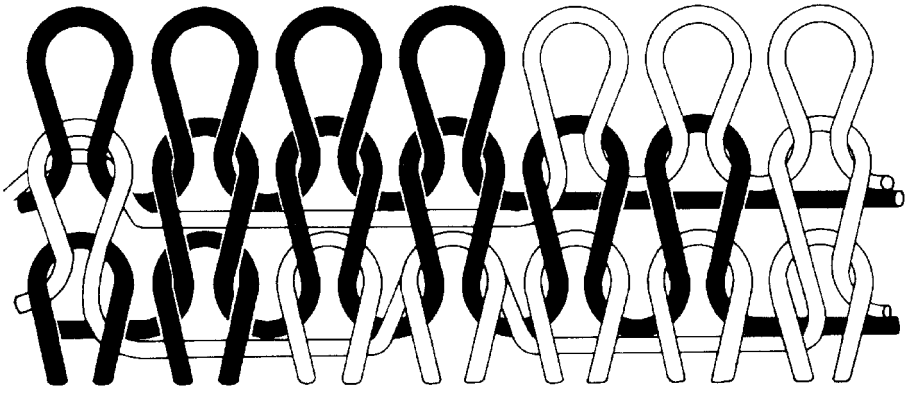

Fig. 10.5 Accordion fabric.

Skechers EX1050
Skechers v Nike

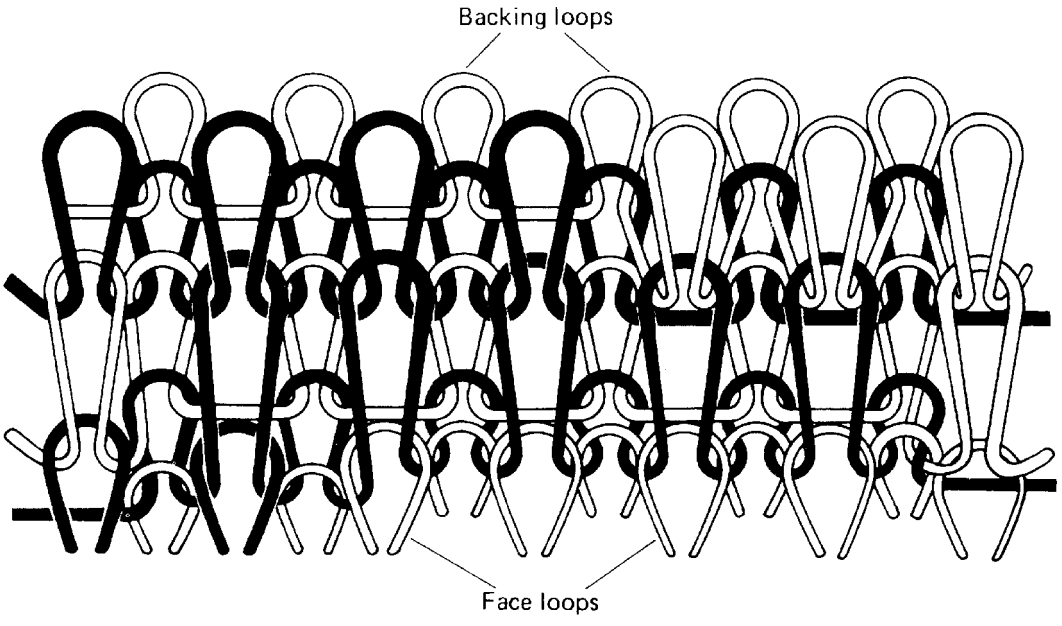

Fig. 10.6 Rib jacquard.

needles knit the backing loops, whereas on flat machines both beds may have selection facilities.

With *horizontally striped backing*, all dial needles will knit at every feeder, thus producing an unbalanced structure with more backing rows of stitches than design rows. In the case of *three-colour jacquard*, there will be three times as many backing rows as design rows. This type of backing ensures that the maximum yarn floats are only across one needle space and there is thus little loss of lateral extensibility – a prerequisite for garment-length and hosiery structures.

For double jersey fabrics, *birds eye* or *twill backing* (Fig. 10.7) is preferred as this is a more stable structure which is better balanced and has a pleasing, scrambled-colour appearance on the backing side. It is achieved by knitting the backing on alternate needles only and arranging for each colour to be knitted by odd backing needles at one feed and even needles at the next. The optimum number of colours is usually three.

On flat machines, it is possible to select only certain needles to remain in action to knit the backing; for example, 1 in 3 or 1 in 5. This is termed *ladder backing*. The backing needles virtually chain knit the floating threads in the back of the fabric. This produces a lighter fabric but there is less connection between the design and the backing sides of the fabric.

Whereas flat jacquard patterns have equal numbers of loops in each wale of the pattern repeat, *blister* and *relief patterned* fabrics do not. Links-links purl machines (particularly hosiery machines) may have facilities for knitting combined colour and stitch effects. Usually, the needles in one bed knit continuously so that the lateral extensibility of the structure is not too adversely affected. *Float bolt* patterning is more restricted. At the first feed, needles selectively transferred to the bottom cylin-

Skechers EX1050
Skechers v Nike

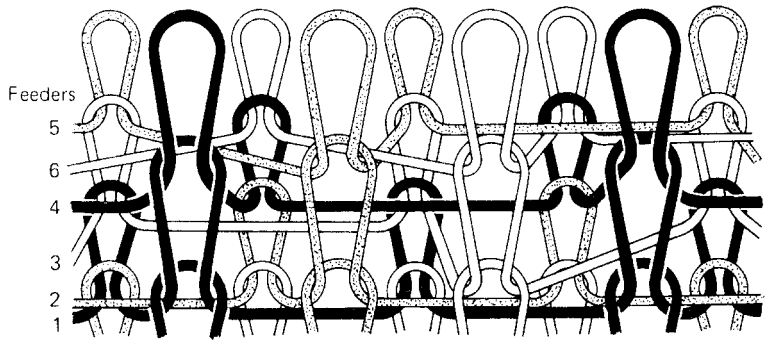

Selection (cylinder) side
Three colour jacquard with birds eye backing

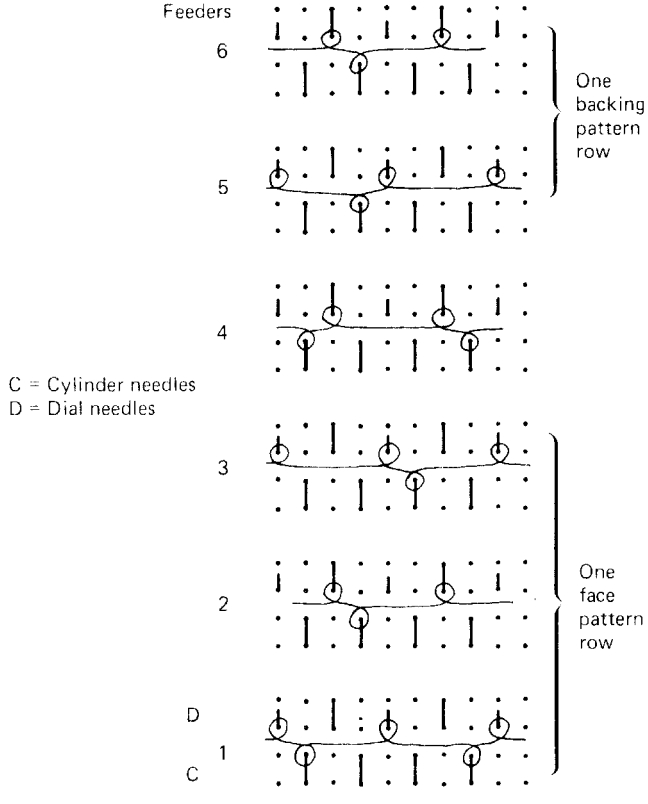

Fig. 10.7 Three colour jacquard with birds eye backing.

der knit together with those remaining in the top cylinder. At the second feed, the latter knit alone with the miss stitches floating at the back of the plain loops of the previous course. In combined links-links and three colour float jacquard, needles may be selected to knit in the bottom cylinder at any one of the three feeds. The needles which remain in the top cylinder knit at each of the three feeds, producing floats behind held plain loops (Fig. 10.8).

Skechers EX1050
Skechers v Nike

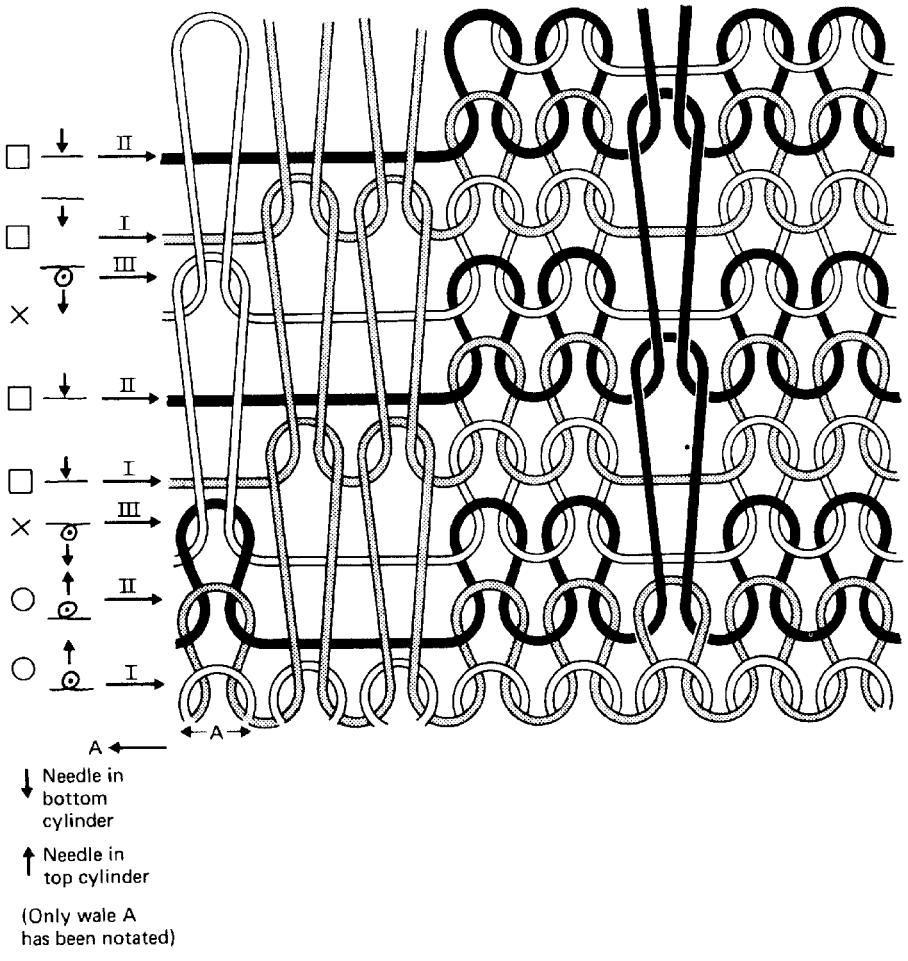

Fig. 10.8 Combined links-links and three colour float jacquard.

10.5 Jacquard design areas

The design area is controlled by the selection system of the machine:

Full jacquard implies unrestricted pattern depth in pattern rows and a width that may be the total number of needles in the machine.

Large area jacquard designs have a pattern depth that requires more than one machine revolution to be developed and therefore each feeder contributes two or more courses; the pattern width is usually more than 48 wales.

Small area jacquard has a pattern depth which is developed in one machine revolution so that each feeder contributes only one course from a fixed selection, and the pattern width is 48 wales or less.

10.6 Worked example

The squared diagram illustrates part of a three-colour jacquard design, each face stitch being represented by a square.

Skechers EX1050
Skechers v Nike

Using the running thread notation, provide:

(a) A representation of the design for single jersey knit/miss jacquard.
(b) A repeat of the representation of the first two pattern rows for:
  (i) straight accordion,
  (ii) alternate accordion, and
  (iii) selected accordion.
(c) A representation of the first two pattern rows as rib jacquard with:
  (i) horizontally-striped backing,
  (ii) vertically-striped backing, and
  (iii) birds eye backing.

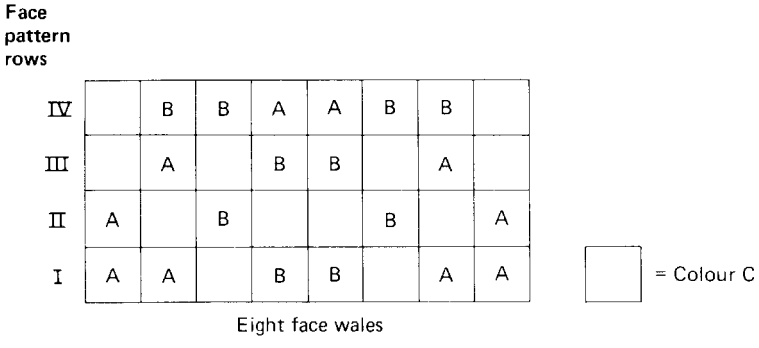

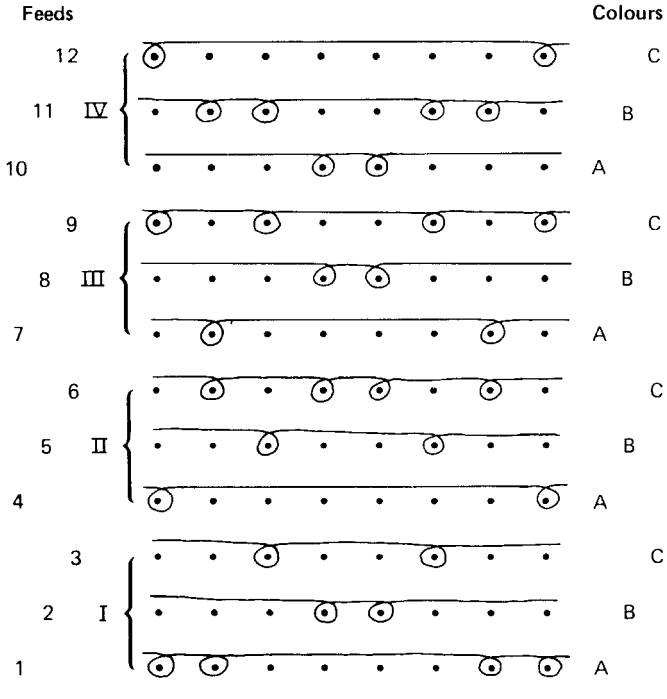

(a) Single jersey knit/miss Jacquard

Skechers EX1050
Skechers v Nike

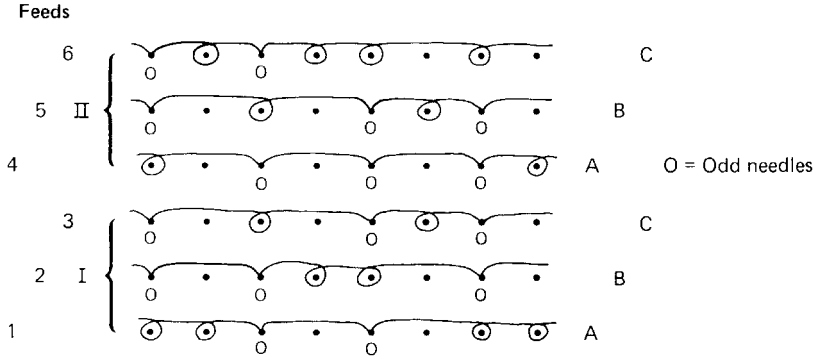

(b) (i) **Straight accordion** (tucking on non-knitting odd needles)

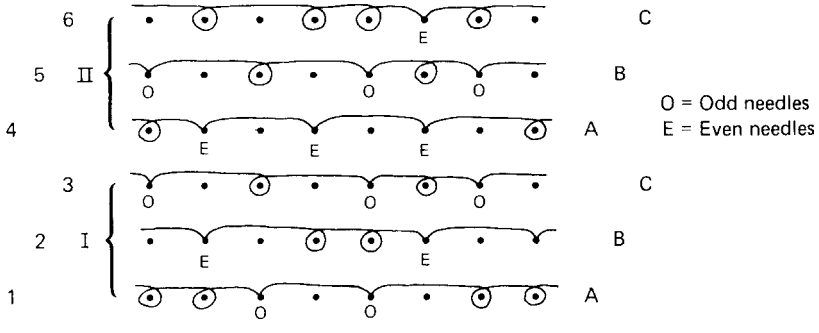

(b) (ii) **Alternate accordion** (tucking on odd needles at odd feeders and even needles at even feeders when non-knitting)

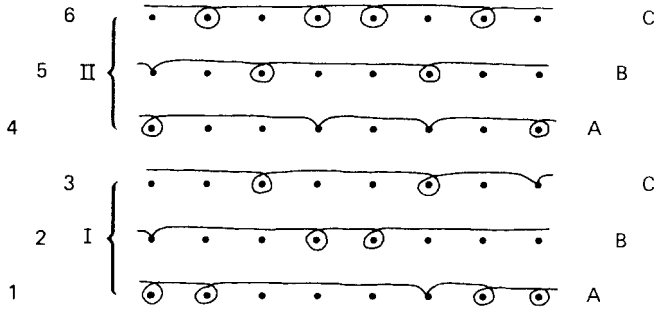

(b) (iii) **Selected accordion** (tucking only on carefully selected non-knitting needles)

Skechers EX1050
Skechers v Nike

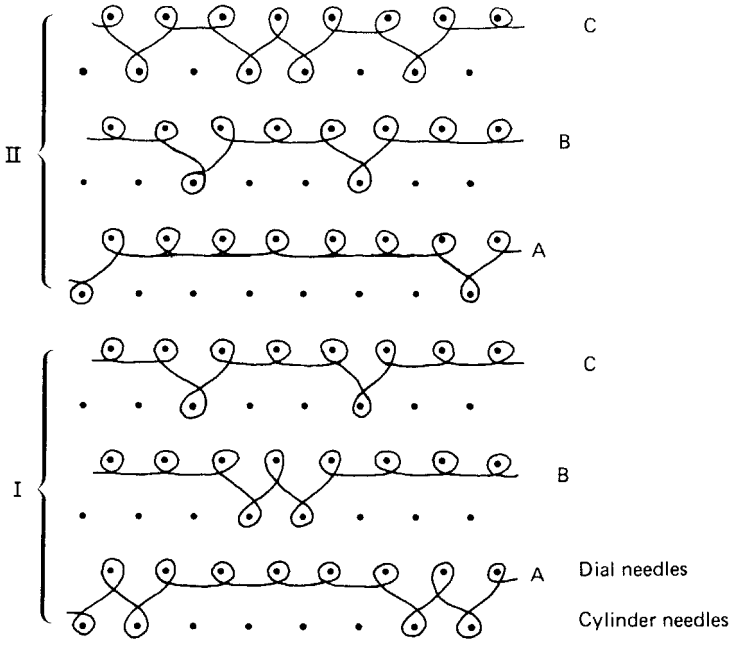

(c) (i) Rib Jacquard with horizontally striped backing

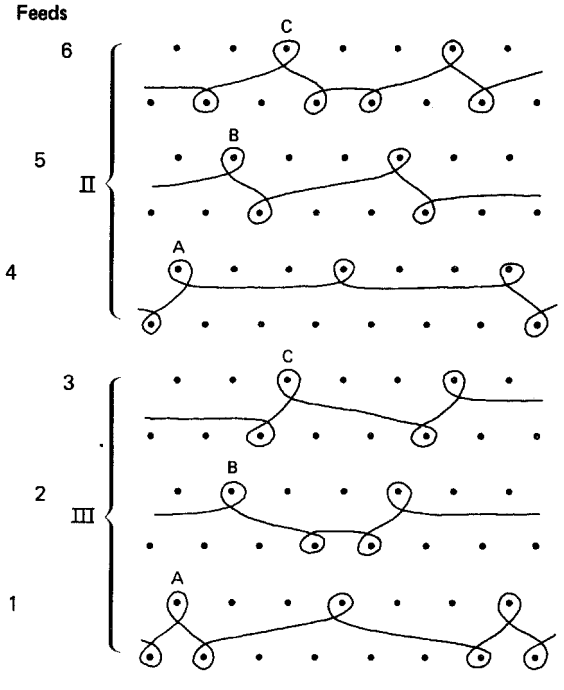

(c)(ii) Rib Jacquard with vertically striped backing

Skechers EX1050
Skechers v Nike

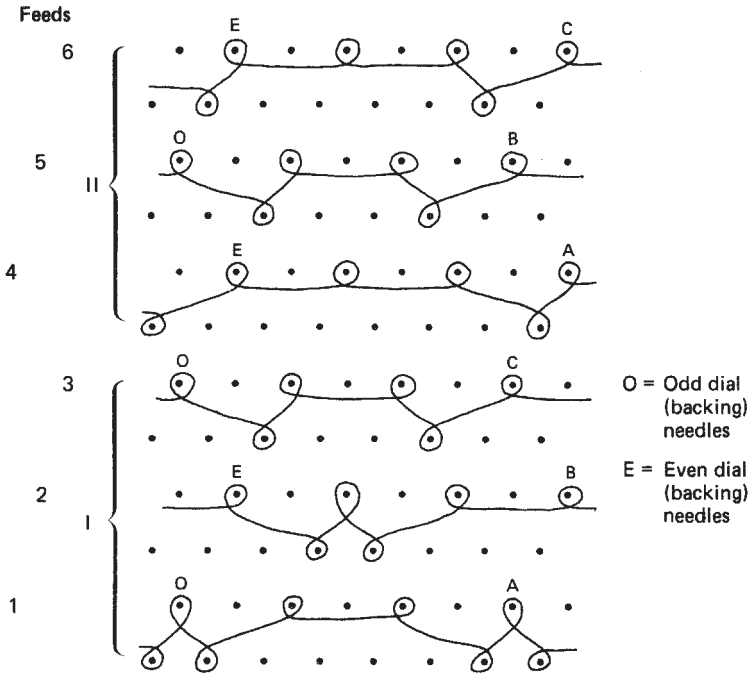

(c)(iii) Rib Jacquard with birds eye backing

References

1. BRIARS, A., Cyril Hurd Memorial Lecture, (2000), April, Leicester Text. Inst. Leicester, UK.
2. HAIGH, D., Dyeing and finishing of knitted goods, *Hos. Trade J.*, (1970), Leicester, UK, 147 pp.
3. VOGEL, R., *Wirkerei-und-Strickerei Technik 29*, (1979), (first English issue), 41–4.
4. CARROTTE, F., Monarch electronic stripers, *Knit. Int.*, (July 1981), 40–1, and (Aug.), 88–9.
5. GOADBY, D. R., Camber micro-electronic striping system, *Knit. Int.*, (May 1981), 95–6.

Skechers EX1050
Skechers v Nike

11

Pattern and selection devices

11.1 Weft knitted patterns

Generally, patterns are produced in weft knitted structures either in the form of selected colours for face stitches or surface relief patterns based on a choice of different types of stitch. As illustrated in Fig. 3.4, the height to which a latch needle is lifted in its trick determines which stitch will be knitted. If all needle butts are in the same position on the needle stems and they pass over the same cam profile, a plain fabric will be knitted, with all stitches having the same intermeshed loop structure. Patterning is therefore determined by selection of needle butts – for example, either to pass onto a raising cam to knit or to miss the cam profile and not be lifted.

The width of the pattern in wales is determined by how many needles can be selected separately, independently of each other. The pattern depth in courses is dependent upon the number of feeds with selection facilities and whether the selection can be changed during knitting.

Simple patterning and quick rib changes (during garment-length knitting) can be achieved in a limited width repeat when element butts are at one of a range of lengths or positions associated with particular raising cam arrangements.

The cam arrangement and element butt repeat set-out will determine the pattern area. Popular simple methods employ different butt lengths and cam thicknesses and/or different butt positions and cam tracks.

11.2 Different lengths of butt

Whereas butts of normal length extend into the track formed between cams and guide their elements by contact with the profiled edges, a butt of shorter length may not reach into the track and will thus pass across the face of the cam and be unaffected by its profile (Fig. 11.1).

The same principle is employed when cams are withdrawn into their cam-plate

Skechers EX1050
Skechers v Nike

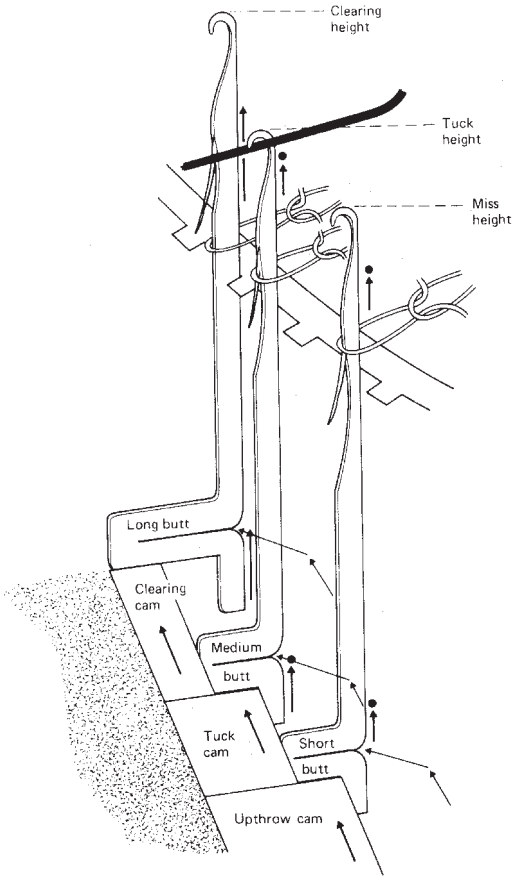

Fig. 11.1 Miss, knit and tuck using different butt lengths.

or the elements are depressed into their tricks, thus reducing the effective length of their butts.

The principle of butt lengths is that the element with the longest butt is always contacted first as a cam is brought into operation and the shortest butt is affected only when the cam is fully in action.

For example, a tuck cam might be partly in action, raising long and medium butt needles but allowing short butt needles to pass across at miss height, whilst the succeeding clearing cam is set to raise only long butt needles, leaving medium butt needles at tuck height. If short, instead of long, butt needles are required to be lifted, it is necessary to contact and lower the long butt needles before they reach the raising cam that is placed fully in action to lift the short butt needles remaining in line with it.

Separately butted and cam-controlled elements known as *push-jacks* may be placed below the needles in their tricks. As their butt set-out need not correspond to that of the needles, a greater selection potential is available than through the set-out of the needle butts alone. Long butt jacks can thus be used to positively lift short butt needles. Jack butt set-outs are particularly suitable for obtaining predetermined rib set-outs in garment length sequences.

Skechers EX1050
Skechers v Nike

11.3 Different butt positions

The principle of different butt positions is employed in the interlock cam system, where two cam tracks are used (Section 7.4.2). In *single-jersey multi-camtrack (raceway)* machines, needle butts may be positioned in one of between 2 and 5 cam tracks that, at every feed position, have fixed but exchangeable knitting, tucking or missing cams. In some machines (e.g. jacquard machines), a common top butt is controlled by a stitch cam-track, whereas in high-speed machines the exchangeable cams also incorporate the stitch and guard cam shape and are located on a common slide for stitch length adjustment (Fig. 11.2).

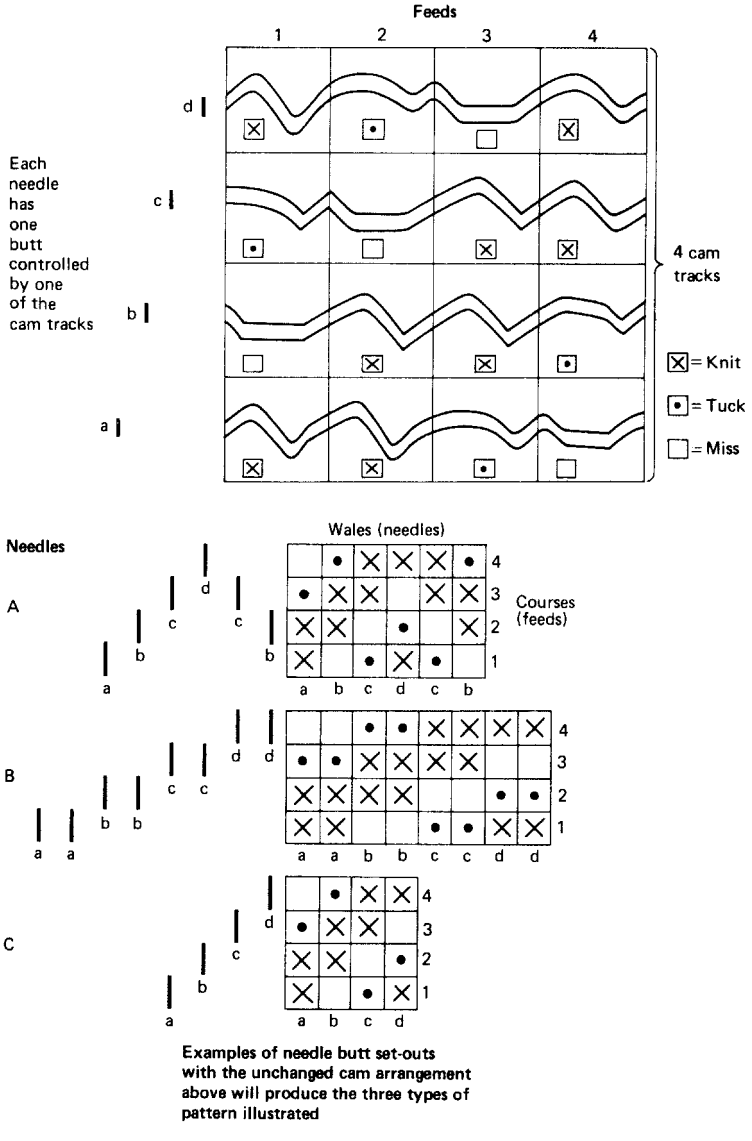

Fig. 11.2 Multi-cam track needle butt control.

Skechers EX1050
Skechers v Nike

11.4 Multi-step butt set-outs

Although some selection devices, including pattern wheels, operate onto element butts of one height position, many patterning arrangements involve the use of a single selection butt for each element, placed at one of a choice of height positions. The total number of different heights often directly influences the width repeat in wales. It is generally most convenient to arrange and retain a butt set-out that is a factor of the needle bed, so that the pattern widths exactly repeat into it.

The two most common geometrical butt set-outs are straight and mirror repeats, although combinations of the two are possible.

A *straight* (*diagonal*, *echelon*, or *up-and-up*) *butt set-out* is arranged in an ascending order in the direction of knitting (Fig. 11.2). Each butt position is used once only in the set-out repeat, so the pattern width is equal to the number of available pattern butt positions.

A *mirror repeat* (*reflex chevron*, *up-and-down*, or *geometric*) *butt set-out* is a mirrored continuation of the straight set-out, with the butts descending in sequence after the highest position (see Fig. 11.3). The top and bottom butts are not used in the descending sequence as the former would produce two identical adjacent wales in the same repeat and the latter would produce two identical adjacent wales with the first wale of the next repeat. This set-out thus produces a symmetrical design width about a common centre wale, with the right side identically mirroring the left side.

With geometric selection, the top butt position is used only in mirror repeats so that these are exactly twice the width of straight set-outs and both mirror repeats and straight set-outs are a factor of the number of cylinder needles.

For example, an E 18, 30-inch diameter machine with 1728 cylinder needles, using a small-area fixed selection, might have 24 butt positions (and pattern comb teeth) for a straight set-out repeating 72 times around the cylinder, and an extra top butt and tooth used only for mirror repeat set-outs, making 25 up and 23 down, giving a width of 48 butts that repeats 36 times around the cylinder.

11.5 Selection devices

Selection devices vary considerably in their facilities and their pattern-changing and pattern-area capabilities.

A *selection device* is positioned to operate in advance of a raising cam system (usually associated with a knitting feed position) to select the path that the element operating butts will follow as they pass through that system. Each possible path will cause the element to be moved in a different manner, resulting in the knitting of a different type of stitch. Usually, a selection decision determines the choice of two butt paths.

11.6 Element selection

Element selection involves three aspects:

1 The *initiation and presentation* of the selection decision, usually as a *YES* or *NO*, by the presence or absence of a tooth, a peg, a punched hole or an electronic

Skechers EX1050
Skechers v Nike

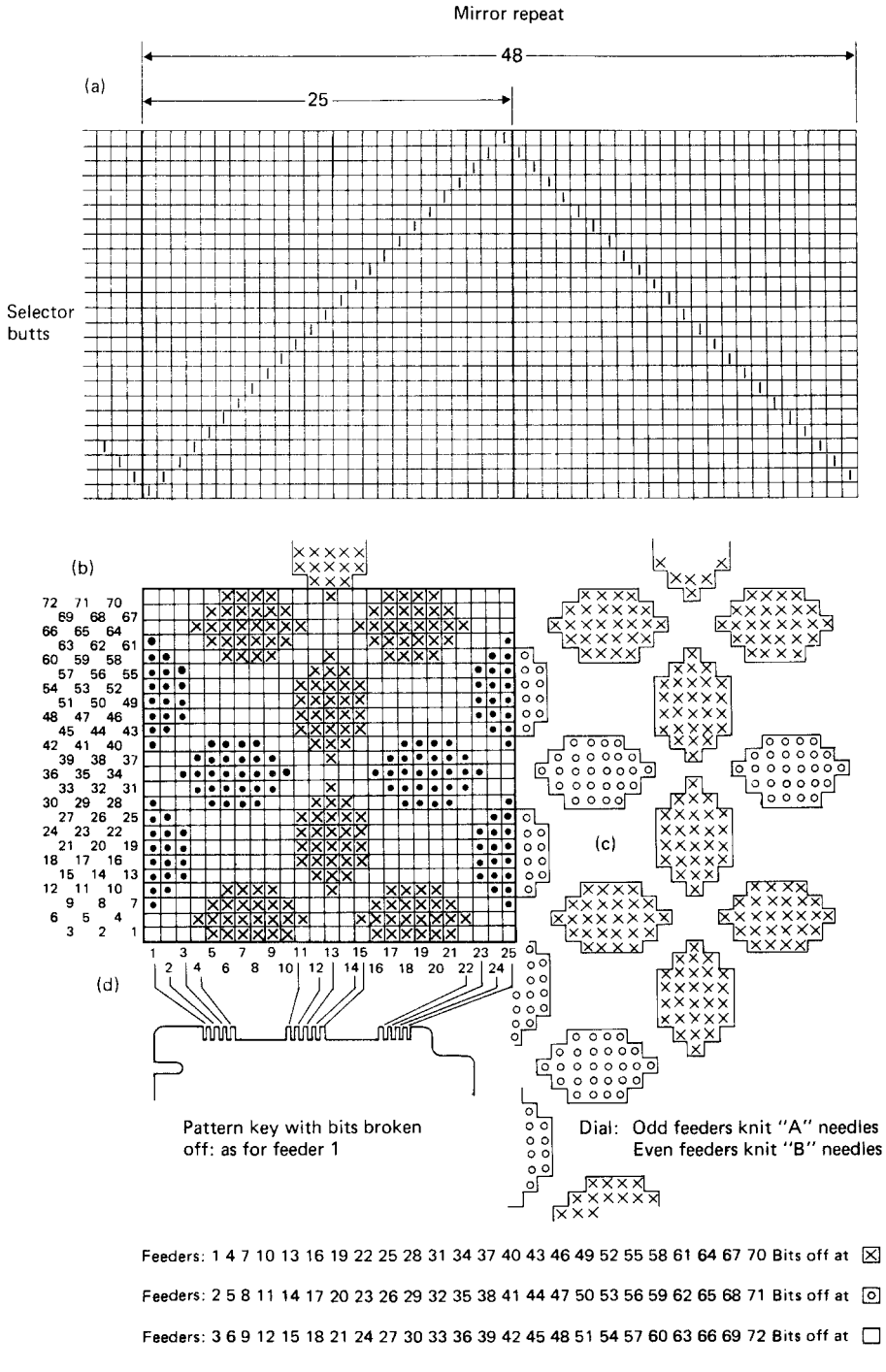

Fig. 11.3 Mirror repeat needle selection.

Skechers EX1050
Skechers v Nike

impulse. Normally, there is a selection in advance of a raising cam, with each feeder course being associated with a particular selection device.

2 The *transmission of the selection decisions* from the device and their reception by elements in each trick of the needle bed. One of three methods is normally employed for this task:
   (a) Employing *individual raising cams*, when required, for each element raising butt (pattern wheel selection).
   (b) *Selectively pushing* the elements upwards in their stationary tricks to align their raising butts into action with the path of the traversing or rotating cam systems (full mechanical jacquard selection).
   (c) *Selectively retracting* the elements into the interior of their tricks so that their raising butts no longer project out into the path of the cams. This method is widely used for mechanically- and electronically-initiated selection on circular and flat machines, especially when employing geometric multi-butt set-outs of selection butts. Raising butts may be selected to miss a complete raising cam or only the final upper section (e.g. between tucking and clearing height).

3 The *translation of the selection decision into a knitting movement*. With the exception of linear-motor drive of needles, this is still a completely mechanical action of a raising butt following, or failing to follow, the profile of a raising cam and thus causing an element to be lifted, or not lifted, in its trick during a stitch formation cycle.

Normally, all selection devices of one circular machine will hold an equal number of width selections and an equal number of depth selections. When each device is aligned to commence selection at the same starting trick (wale), equal widths of selection will occur at each feeder course and will be aligned into rectangular selection areas exactly framed by the courses and wales of the fabric (Fig. 11.4).

11.7 Selection area arrangement

Dependent upon the type of device, four arrangements of the selection areas around the fabric tube are possible:

1 *Full jacquard selection* can produce a selection area of theoretically unlimited depth and a width equal to the number of needles in the cylinder, so that the design exactly surrounds the fabric tube without repeating.

2 *Pattern wheels* have a circumference selection that is not an exact factor of the number of cylinder needles, so that their selection areas follow the spiral path of the feeder courses around the fabric tube. In the starting wale of each machine revolution, the base of the areas will thus have risen by the number of feeder courses knitted in one machine revolution compared with its position in the same starting wale at the previous machine revolution (X in Fig. 11.4a).

3 *Fixed geometric selection devices* (step jack devices) provide only one selection width at each device, which is unchanged from one machine selection to the next (Fig. 11.4b). Machines employing this type of device are termed *small-area* or *intermediate jacquards*; although their pattern area potential is limited, they have

Skechers EX1050
Skechers v Nike

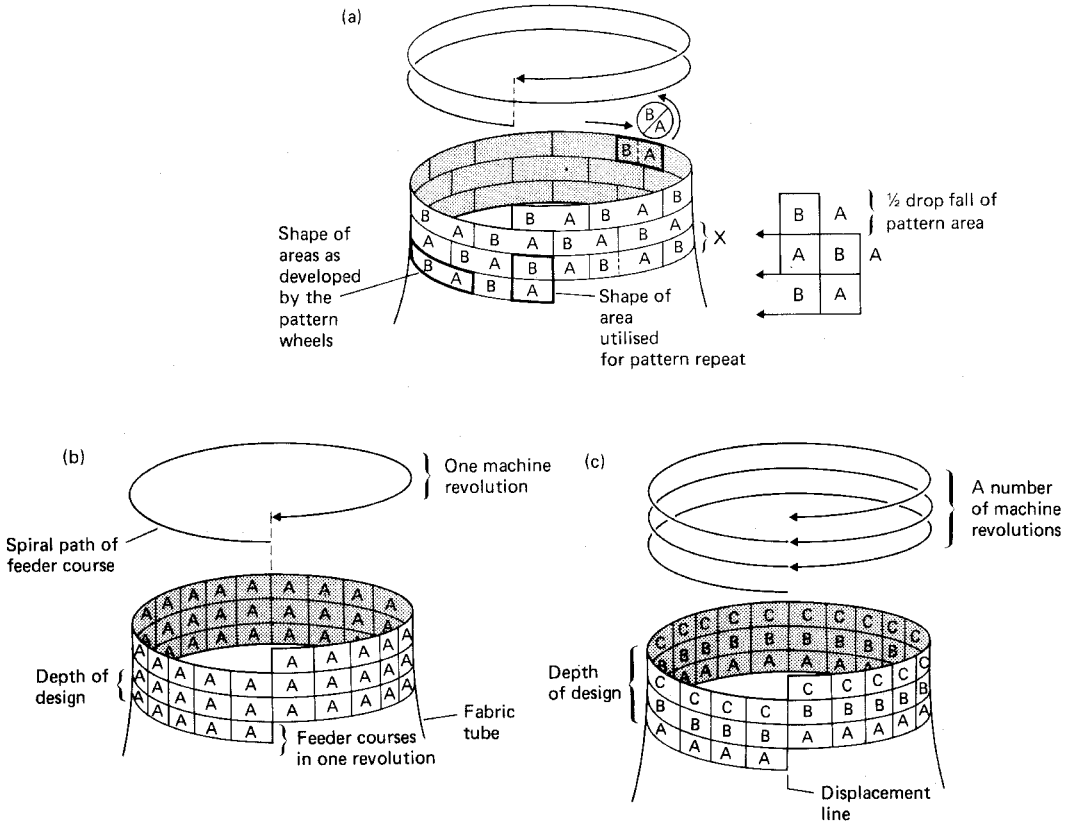

Fig. 11.4 The development of design areas using selection devices.

sufficient feeders and speed to be employed in the production of single colour and plain structures as well as jacquards.

A complete design depth is thus produced at each machine revolution, composed of the number of active feeder courses, so that the base of the design will have risen by that number of courses each time it is recommenced in the starting wale, but no displacement of design is noticeable between the adjacent finishing and starting wales of the fabric tube.

4 *Non-fixed geometric selection devices* hold a limited number of different selection widths so that a new selection width may be presented, commencing in the starting wale of each machine revolution (Fig. 11.4c). Single-jersey and rib machines using non-fixed selection are termed *large-area jacquards*. A design depth is thus developed that is a multiple of the number of machine revolutions in the sequence of selection presentations. These devices produce a displacement line between the starting and finishing wales of the tube in the form of a rise by the number of feeder courses in one revolution. Usually, the tube is split open along this line during finishing.

The potential depth of non-fixed selection devices is increased by the ability to dwell (retain) a selection for a number of machine revolutions, and to rack the selection sequence forwards or backwards by one or two steps.

Skechers EX1050
Skechers v Nike

Only in the case of full jacquard selection on machines with stationary needle bed tricks (certain flat machines and revolving cam-box circular machines) can a successive row of selection decisions be kept in permanent alignment with each trick. On other revolving cam-box machines and flat machines, the selection devices pass across the tricks with their associated cam-sections or, in the case of revolving cylinder machines, they remain with their cam-sections as the cylinder revolves past them.

Pattern wheels or discs turn in continuous alignment but in the opposite direction to the cylinder, so that each trick in turn receives a decision from the selection sequence around the wheel periphery. The element butts being selected may be set-out at the same height. Although the selection is in a fixed set-out in a pattern wheel, the pattern depth is spirally developed over a number of machine revolutions. On machines with selector wheels, a tape may rearrange the selection set-out for the next machine revolution, or a different disc selection may be switched into operation.

With multi-butt selection, the selection butt at each trick can be placed at one of a number of different heights, usually in a geometric set-out, which together will determine the pattern width (Fig. 11.4). As either the selection device or the needle cylinder is revolving, the selection is transferred from the device by a bank of spring-loaded plates or electronically-controlled selectors that pivot across to contact any selection butts at that height as they pass (Fig. 11.5).

Instead of one pattern key (comb) at each selection, it is possible to have four different selection keys on a spindle so that, when the machine has a pattern

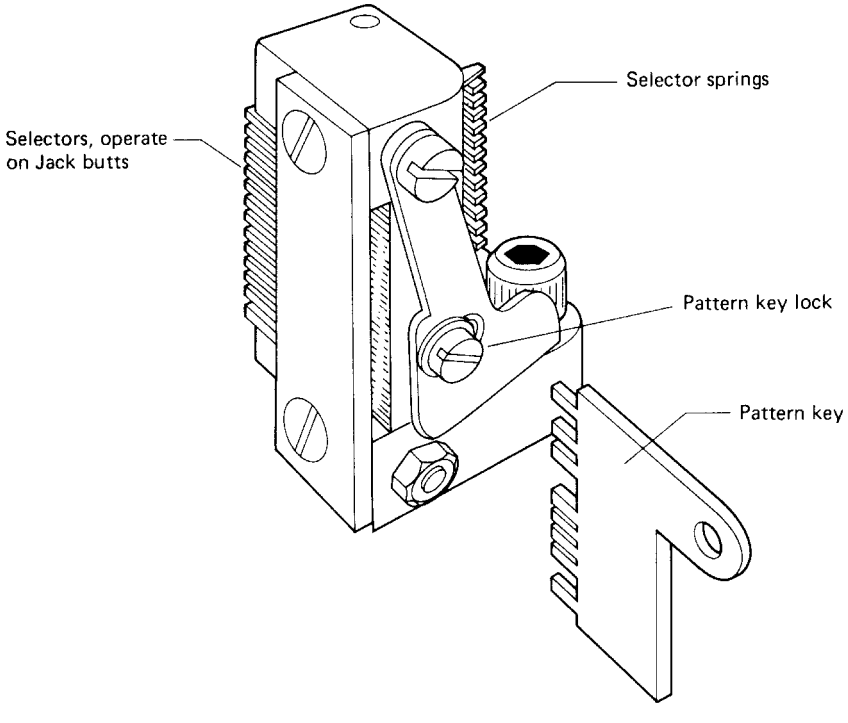

Fig. 11.5 Fixed pattern key selection.

Skechers EX1050
Skechers v Nike

change, the spindle is turned at each feed to introduce a new pattern-selection key.

On mechanical selection devices, a vertical row of selection teeth or pegs at each station pushes the respective height plates towards the needle bed. With non-fixed selection, a different selection row may be aligned at the start of each machine revolution at each device in turn.

11.8 Full jacquard mechanical needle selection

Full jacquard mechanical needle selection provides the possibility of independent selection over the full width of the stationary needle bed in a simultaneous movement for all needles on flat machines or onto blocks of adjacent needles on revolving cam-box circulars. Theoretically, it offers unlimited depth in traverses or revolutions dependent upon the number of jacquard steels or the length of the jacquard rolls. Each column of holes is allocated to a particular needle, with a new selection being presented by each part turn of the prism or roller.

The arrangement was widely applied to flat machines. It has also been employed on rib jacquard and garment-length purl machines produced by the *Wildman Jacquard Company* (see previous editions of this book). Pattern changing was time-consuming and expensive (just one design row of two-colour jacquard around the machine involved 2×1344 separate punched hole positions). In addition, low production speeds, a limited number of feeders, and coarse gauge restricted its use. Full mechanical jacquard selection has now been replaced by electronic jacquard selection on both V-bed flats and on circular machines.

11.9 Multi-step geometric needle selection

Multi-step geometric selection has developed from the *Brinton* trick wheel of 1926, which first employed single butted depressible selectors beneath the cylinder needles rather than in an intermediate drum. Figure 11.6 illustrates a device, used on *Wildt Mellor Bromley* machines of the RTR range, for either rib jacquard or rib loop transfer selection on circular garment-length machines with revolving cam systems. The pattern drums move with their associated cam sections and have a circumference of 40 vertical rows of selection. As each drum passes the garment control mechanism, it may be caused to single or double rack forwards, or single rack backwards, or be bluffed to dwell and retain the same selection for the next machine revolution. Thus, within the pattern depth, 40 different feeder courses are possible for each pattern drum.

Each vertical column around the drum has a height of either 24 or 36 selection positions, depending upon the model. This depth corresponds to the pattern width repeat. The drums are either drilled with holes to receive push-in metal pegs or are equipped with grooved tricks for the insertion of pattern jacks whose butts are snipped off according to the pattern. The latter arrangement is generally preferred as the jacks can be prepared in a less laborious operation whilst the machine is knitting another design.

A bank of spring-loaded selector plates, corresponding in height to the possible selection heights, works with each drum to transmit the selection to the cylinder.

Skechers EX1050
Skechers v Nike

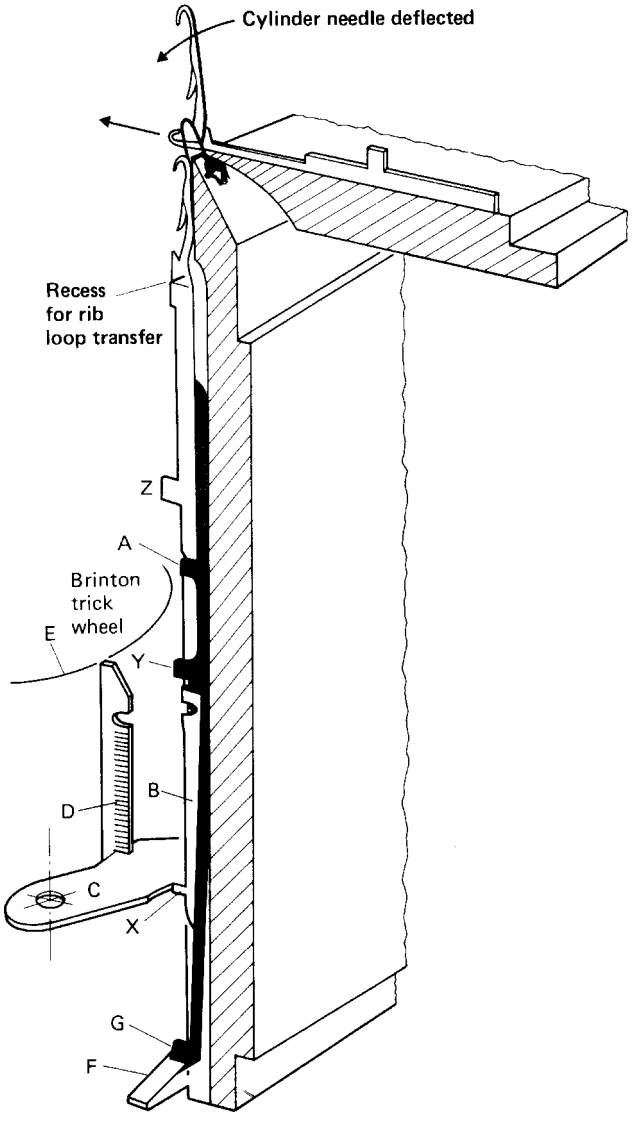

Fig. 11.6 Geometric selection using Brinton trick wheels.

The tail of each cylinder needle is supported by the upper edge (A) of a spring-tailed lifting jack. A selector presser (B) is placed in front of each jack in a trick. The presser has a complement of 24 or 36 pattern butts corresponding to the width repeat; all except one butt (X) are removed so that a chevron or echelon pattern butt set-out is arranged around the needle cylinder.

The tail of the lifting jack is sprung outwards, so that its raising butt (G) is in line with the raising cam (F) (F may be either a clearing cam or a rib loop transfer cam). If butt (G) follows the profile of cam (F), the jack will lift its cylinder needle to either knit or transfer its loop, depending on the cam position and shape.

The selection is indirect, requiring a decision for non-movement of the needle.

Skechers EX1050
Skechers v Nike

When a pattern bit (D) is placed in the vertical row of the drum directly facing the cylinder at the same height as the pattern butt (X) of a needle jack presser, the spring-loaded plate (C) at that height will be pivoted towards the cylinder so that it presses against butt (X) as it passes by. This causes the tail of the jack to be depressed into the cylinder so that its butt (G) goes behind the raising cam (F) and the needle is not lifted.

Needle butt (Z) is used to lower the needle and this, in turn, lowers the jack ready for selection at the next cam system. The effect of the selection may be cancelled (for example, in the rib border of a garment length) by introducing a raising cam to lift all jacks by means of butts (Y).

11.10 Needle selection by disc

The *Mellor-Bromley* rib jacquard (RJ) system uses revolving stacks of discs at each feed selection position. The replaceable disc stacks are rotated in unison with the machine drive. On 72-feeder machines, the stacks are accommodated at two alternately staged heights. When a disc tooth contacts the bottom half-butt of a presser (X in Fig. 11.7), it causes the jack tail (Y) which supports it to be retracted into the cylinder so that its tail butt misses the raising cam (Z) and the needle which is supported by the jack is not lifted to knit.

Presser half-butts are of two types: those with an upper half-butt (X in Fig. 11.7) are placed in odd cylinder tricks, and those with a lower half-butt are placed in even tricks.

A selection disc is actually composed of a pair of discs, the teeth of the upper one selecting odd needles by means of the upper half-butt and the teeth of the lower one selecting even needles by means of the lower half-butt (O in Fig. 11.8). As each only selects alternate needles, their teeth are cut twice as coarse as the machine gauge and are centred for these needles. The total number of teeth in a selection disc determines the pattern width, which may be 144 wales in 28 gauge.

At any cylinder revolution, a disc at the same height at each stack will be selecting. After each revolution, the pressers may be raised or lowered to a different height so that their half-butts are aligned with a different disc selection. In this way, as many as 18 discs, each for a selection at a different cylinder revolution, may be accommodated at each stack.

The height control of the pressers is achieved through their identically arranged and carefully-spaced guide butts, of which each may have as many as 10, depending upon the height of the disc stacks. During each cylinder revolution, two of these butts are in contact with a guide channel that surrounds the cylinder so that the pressers are held at a constant height. Three bolt cams, situated at a short break in the channel, provide the choice of serially lifting, lowering or retaining (bluffing or dwelling) the pressers at the same height for the next cylinder revolution. Introduction or withdrawal of each cam is controlled by separate tracks on a punched-hole film that racks once per cylinder revolution and thus has a major effect on the pattern depth.

Fig. 11.8 illustrates the change of presser height (S) at each of eighteen cylinder revolutions so that its half-butt obtains the selection from every disc (D) in the stack. Notice that, during the revolutions whilst the presser is being lifted, its guide butts occupy position (A) in the guide.

Skechers EX1050
Skechers v Nike

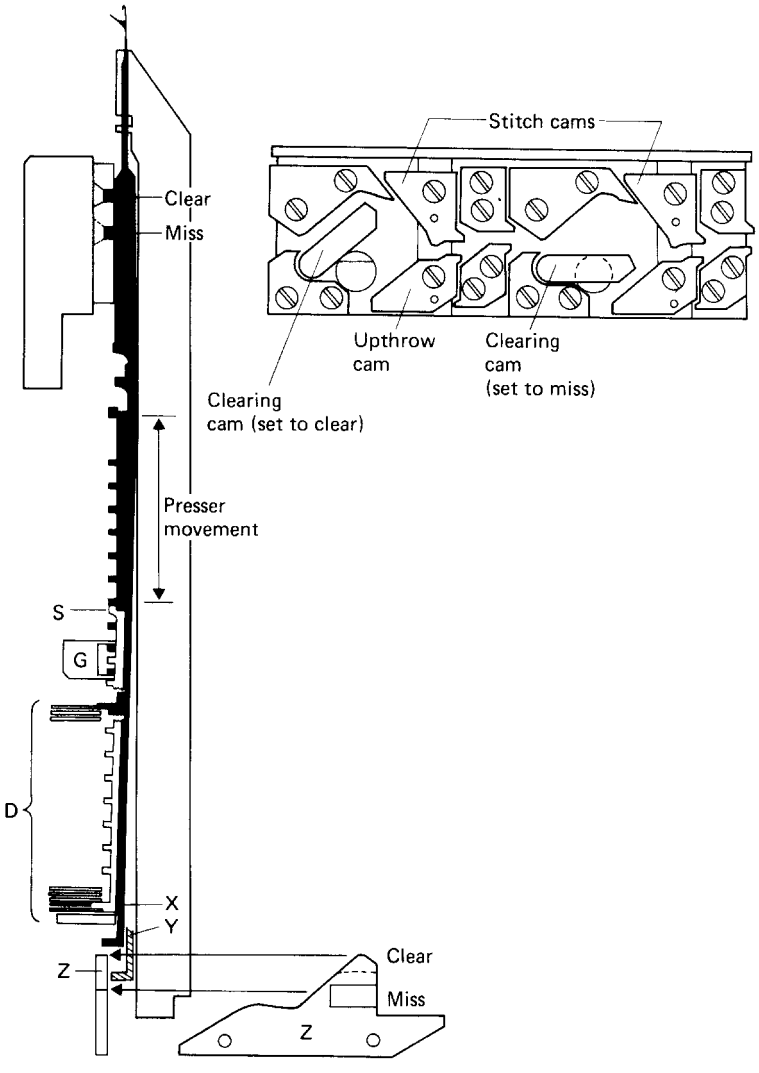

Fig. 11.7 Disc selection.

11.11 The pattern wheel

The pattern wheel is a cheap, simple device occupying little space, and is unique in employing separate raising cams, in the form of pattern bits, to select and move individual elements, if necessary, to three different positions in their tricks (Fig. 11.9). It is most popular in single-jersey machines, either as an inclined wheel for needle or point selection, or as a horizontal wheel for plush sinker selection. The pattern set-out, which is unchanged during knitting, uses bits which are either re-usable and are inserted into the tricks, or are break-off teeth on pre-prepared discs.

The wheels, tricked to the same gauge as the revolving cylinder needles, are driven continuously in the opposite direction, either by the needle butts meshing with their tricks or by gearing from the cylinder.

Skechers EX1050
Skechers v Nike

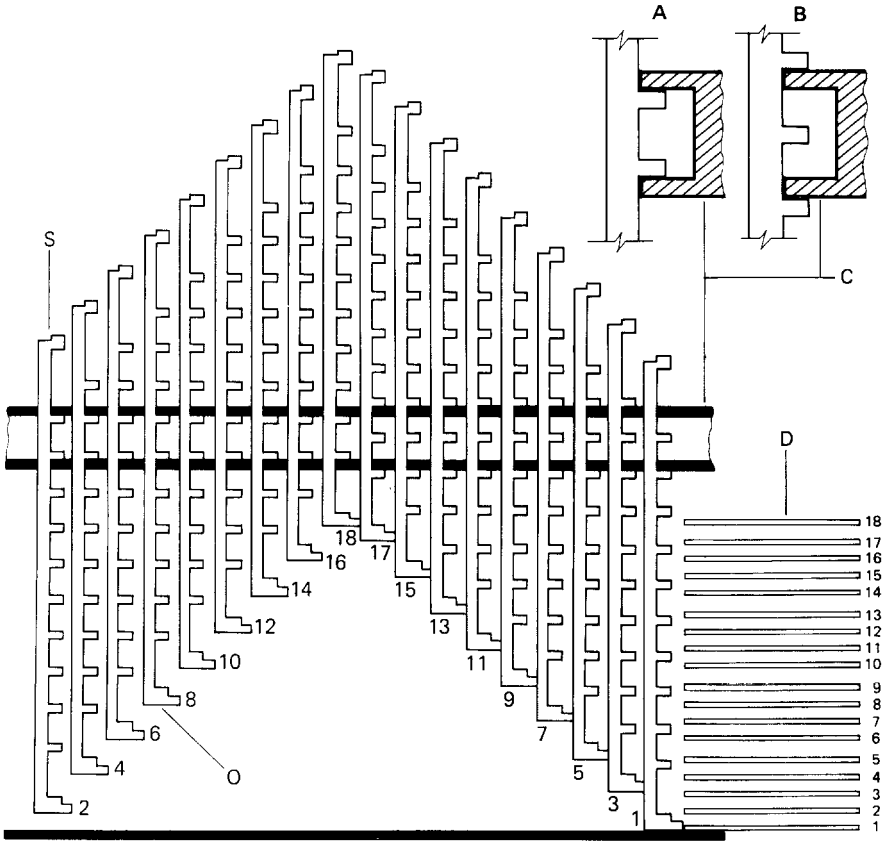

Fig. 11.8 Change of presser position from one revolution to the next.

The wheels are of the gain or loss type so they do not produce an exact number of complete turns in one machine revolution. The design areas can have a depth greater than the number of feeds, but are built up in a spiral manner, compared with the courses around the fabric tube.

The inclined pattern wheel, like all selection devices, is normally placed at each feeder. It is set at an angle of 20–40 degrees in place of the solid raising cam so that, as it turns, it lifts any element whose butt rests on a pattern bit. The needles will all have a butt of the same size in the same position.

With a three-position wheel (Fig. 11.9), a needle entering an empty trick will remain at miss height (3), a needle supported by a low bit will be lifted to tuck (2), and a needle supported by a high bit will be lifted to clear (1). Needles left at miss height are lowered by a wing cam (X) to ensure that they do not inadvertently receive yarn.

Some machines have four-finger striping selection available at each feeder wheel, which considerably increases the pattern depth and scope. Another mechanism often used in conjunction with striping is a pattern placer, tuck bar, or pattern-cancellation device, which is a moveable raising cam, usually acting onto a butt at a level lower than the pattern wheel. When the cam is raised into action, it causes

Skechers EX1050
Skechers v Nike

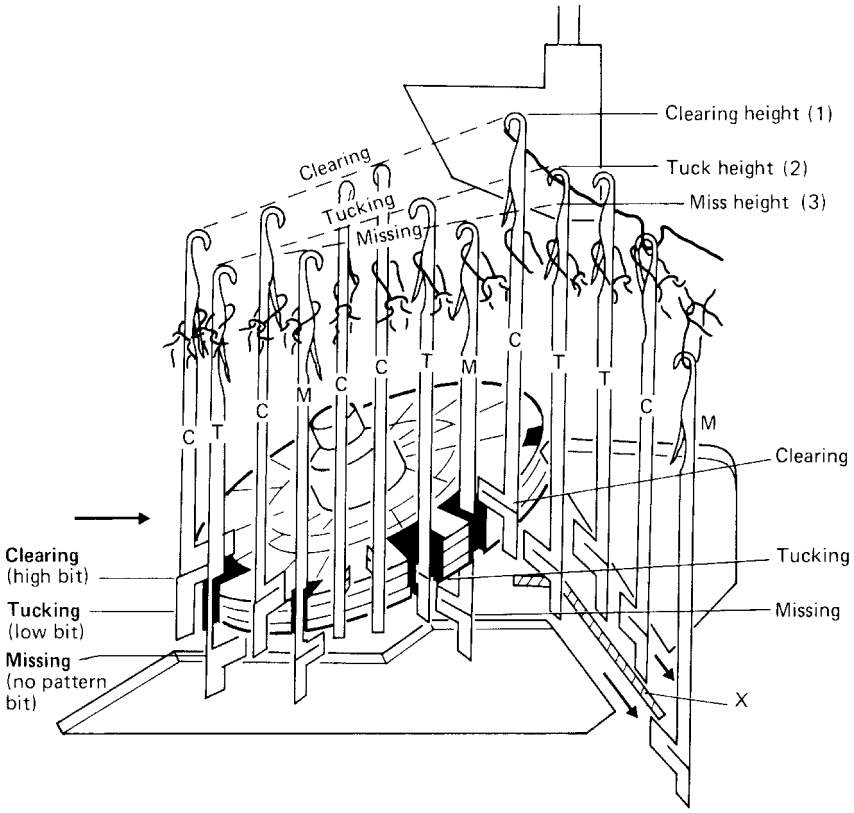

Fig. 11.9 Three-step needle selection using a pattern wheel.

all needles to be lifted to knit and thus cancels the selection for a number of courses so that alternating bands of design and plain single colour may be produced.

Alternative methods of needle selection with higher productivity, less restrictive pattern areas, and quicker pattern-changing facilities have replaced the pattern wheel as the most popular method of pattern selection.

11.12 Pattern wheel design areas

The principles governing design areas apply to all wheel selections, including sinker-wheels with plush and plain plating sinkers, provided that their set-out remains unchanged during knitting (Fig. 11.10). The wheels are generally of the same size and gauge on the same machine. The needle producing the starting wale of the design is marked and, as the cylinder turns during the first revolution, it will align with the marked starting trick of each wheel in turn, to ensure that their selections commence above each other in the same wale. As the widths will be of the same size and similarly arranged in each wheel, they will be built-up into a pattern depth, each exactly aligned with the previous one, commencing with the first feeder selection. They will therefore be arranged as columns of pattern widths around the fabric tube.

Skechers EX1050
Skechers v Nike

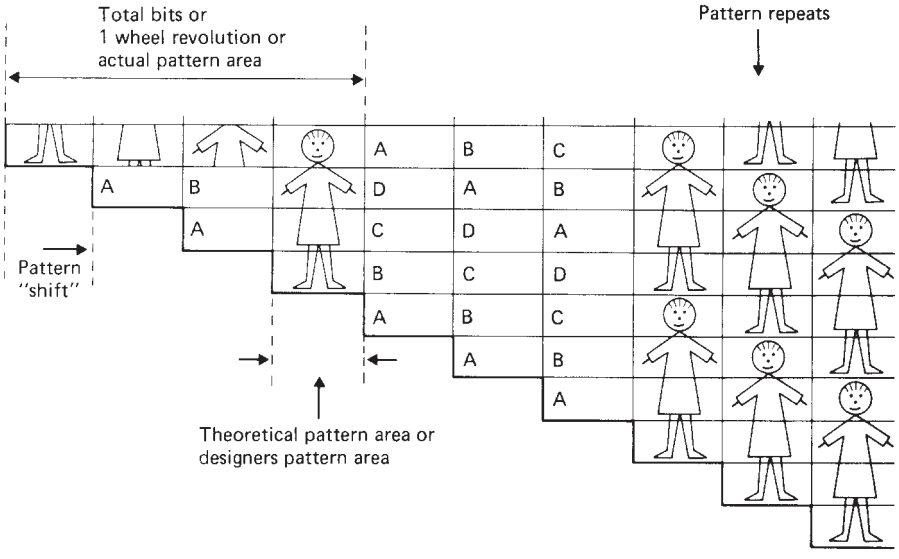

Fig. 11.10 The building of pattern areas over a number of machine revolutions using pattern wheel selection.

A rectangular design area is developed if the chosen width (W) is the highest common factor (hcf) of the cylinder needles (wales in the fabric tube) (N) and the tricks in one wheel (T).

A non-spiral design area, showing no fall (f) in courses from one pattern width to the next across the fabric, is produced when T is an exact factor of N, so that $W = T$. In one machine revolution, the wheels will make an exact number of turns and their starting tricks will re-align with the starting needle in the cylinder, thus completing the pattern depth.

The number of pattern width columns around the fabric tube (P) = N/W. The pattern depth (D) in feeder courses = Feeders (F) × depth per feed or number of pattern widths in one wheel (d).

To convert the number of courses to pattern rows, it is necessary to divide them by the number of colours (C) in the design.

Example: If $N = 1400$, $T = 140$, $F = 36$, $C = 2$.

Calculation: $W = 140$ (hcf of N and T)

$P = N/W = 10$

$d = T/W = 1$

$D = F \times d = 36$ Therefore depth in pattem rows $= 36/C = 18$.

With a design area of 140 wales by 18 pattern rows, it is too wide and too shallow for most designs.

Spirally-developed designs are used because they provide a greater pattern depth but, as a consequence, they also produce a fall between one pattern area and the next one adjacent to it. They are produced when T is not an exact factor of N (i.e. $N = nT + RT$) where n = a number of whole turns of the wheel and R is a fraction of a turn.

Skechers EX1050
Skechers v Nike

At the second revolution, the starting tricks in the wheels will not re-align with the starting needle in the cylinder, and the continuous selection of the wheels will have 'shifted' or 'moved on' compared to the cylinder needles. Each wheel can be set-out with more than one width ($d > 1$) and W will be a factor of R, so that a different width selection will be produced in the first column of design and in all the others in turn at the next machine revolution, as a result of the shift of the wheels.

The pattern depth will therefore be increased by a multiple of d and it will be built up during d revolutions of the machine, after which the starting tricks of the wheels will again re-align with the starting needle in the cylinder because, by then, they, as well as the cylinder, will have completed an exact number of turns.

The disadvantage of spirally-developed designs is that each wheel is producing a number of different pattern width selections in adjacent columns along the same feeder course and, as these are for different courses in the pattern depth, the pattern areas will appear to fall from one column to the next.

The fall (f) is expressed by the difference between the two adjacent widths in courses in the direction of knitting, which is towards the right in fabric produced on machines with clockwise revolving cylinders. It must be understood that each wheel has shifted sideways by the same amount, so that its width selections are placed exactly above those of the first wheel and are in the correct sequence for the depth. Therefore, although the areas show a fall or drop, the courses are always correctly placed within the pattern depths.

Half-drop design areas occur when $N = nT + 1/2T$ so that $W = 1/2T$ and $d = 2$. It will take two machine revolutions to develop the pattern depth in the starting pattern column but the wheels will, as they turn, place the selection for their second width in the adjacent column and thus produce a half-drop of the pattern area. Using the previous machine data as guide, $N = 1400 + \frac{1}{2}T = 1470$; W = hcf of N and $T = 70$; $N/T = 10\frac{1}{2}$; $P = 21$, $D = F \times 2 = 72$. The wheel of the first feeder will make course width 1 and $(F + 1)$. As the two widths will occur in adjacent columns, the fall will be 36 courses in a total depth of 72 courses.

(Calculations for other types of pattern drops are included in previous editions of this book but are no longer in general use.)

11.13 Electronic needle selection

Electro-magnetic needle selection is now available on many types of knitting machines; this was first commercially used on circular rib jacquard machines (Fig. 11.11). The electronic impulse that energises an electromagnet is usually assisted by the field of a permanent magnet, and the minute selection movement is then magnified by mechanical means.

If all the needles, or a block of needles, were to be simultaneously selected, each would require its own actuator. It is much cheaper to select the needles at a single selection position in serial formation, using between one and six actuators, although the time interval between each selection impulse is shorter.

Many of the modern electronic selection units are now *mono-system*, i.e. the selection butt position for each needle is at the same height, so the time interval between each selection impulse is the time between one needle and the next passing the selection position. The selection speed can be as fast as 6000 needles per second. These selection units are very compact and can now be fitted into the dials of

Skechers EX1050
Skechers v Nike

Fig. 11.11 Piezo-electronic rib jacquard machine with three-way selection and four-colour stripers [Terrot].

large-diameter circular machines for dial needle selection in addition to cylinder needle selection [1].

The *Moratronic* was one of the earliest machines and was first exhibited in 1963 (Fig. 11.12). For each feeder, a photo transistor scans its own track of an endless 35-mm film, giving a selection for each jack control spring as it passes the control position of the feeder. If the position on the film has a transparent spot, light is transmitted to generate an impulse. If the position on the film is opaque, no impulse is generated for that control spring. The impulse is magnified to energise a coil and thus neutralise its permanent magnet at the control position at the precise moment when the jack control spring is guided onto it. The spring is thus not held by the magnet and stands vertically to pass on the far side of a wedge-shaped control cam.

Skechers EX1050
Skechers v Nike

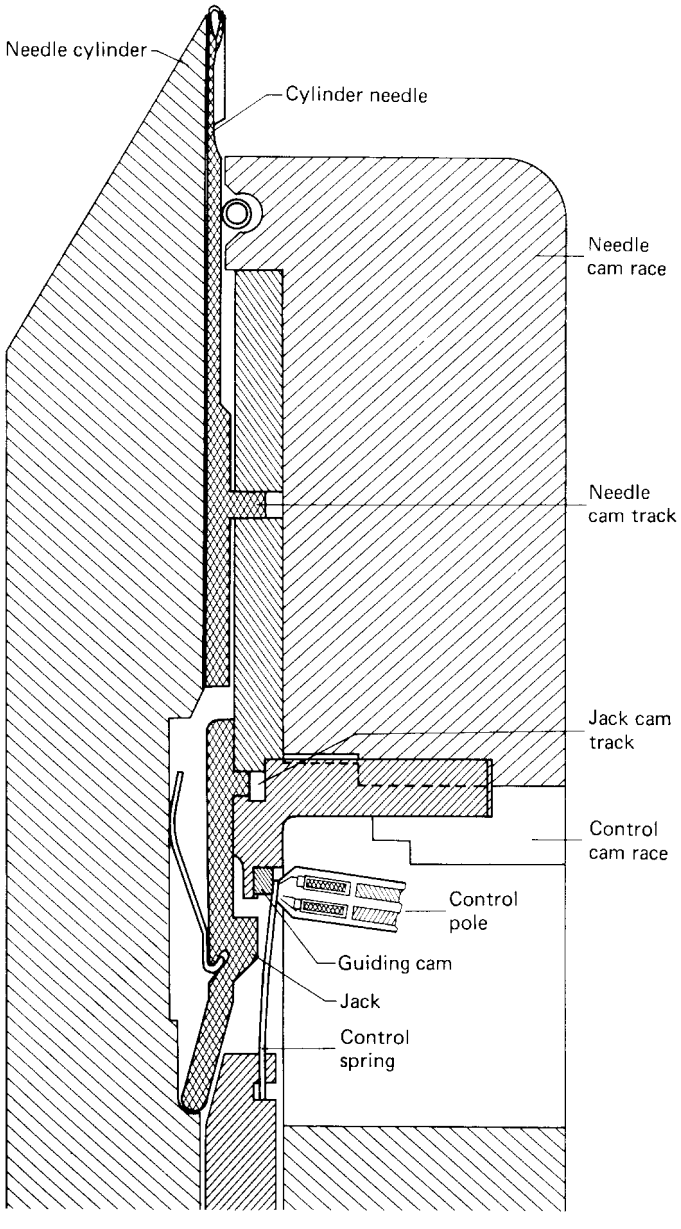

Fig. 11.12 Moratronic needle selection.

As the cam presses onto the spring, it depresses the jack into a deep recess of the trick so that the jack butt is pushed away from the cylinder raising cam and the needle supported by the jack is not lifted to knit. If no impulse is generated, the control magnet can hold the spring so that it passes in a bent position on the near side of the control cam and is held away from its jack, which stays out of its recess with its butt remaining on the raising cam to lift the needle above to knit.

The film is driven in phase with the needle cylinder to make a selection in

Skechers EX1050
Skechers v Nike

0.5 milli-seconds. Twelve million selections are possible – enough for a full-width selection 1564 pattern rows of three-colour design deep.

Reference

1. BOCKHOLT, K., Changes in needle selection, *Knit. Int.*, (1998), May, 51.

Skechers EX1050
Skechers v Nike

12

Electronics in knitting

12.1 The disadvantages of mechanical control

Knitting machines have developed with mechanically controlled and operated movements. The exacting requirements of modern knitting technology, however, emphasize the limitations of mechanical movements which are expensive to manufacture, slow and cumbersome in operation, difficult to adjust or alter, and subject to friction and wear.

12.2 The disadvantages of mechanical programming

Mechanical pattern and programming data for controlling knitting machines is stored in the form of punched cards, chains, rack-wheels, peg drums, and element butt arrangements. These are expensive in material, bulky in space on the machine or in storage, time-consuming to handle and alter, slow in operation, and provide restricted facilities.

Hydraulics, fluidics, and electronics provide alternative systems of power transmission and signal storage with the requisite speed and precision.

12.3 The advantages of electronic control and programming

Electronics offer the decisive advantages of convenient power-supply, compatibility with existing mechanical components, micro-miniaturisation of circuitry, and economical data storage. In addition, electronic systems do not require to be of a size proportionate to their task or to operate on a one-to-one relationship with it.

Electronic selection or machine control is compatible with higher running speeds and eliminates complex mechanical arrangements, thus reducing supervisory requirements. It provides greater versatility as regards design parameters, simplifies

Skechers EX1050
Skechers v Nike

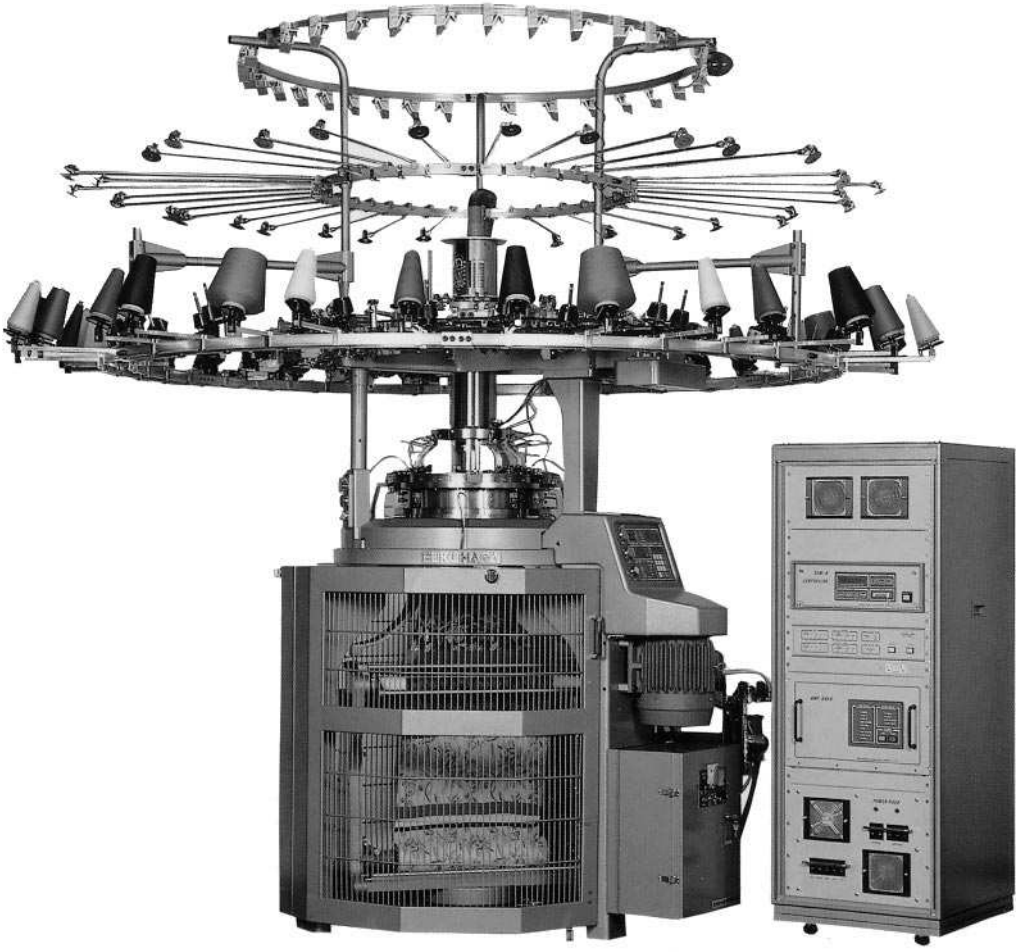

Fig. 12.1 Electronic sampling machine [Monarch].

the modification of repeat sequences and size, style and pattern-changing operations, and, in some cases, enables changes to occur whilst the machine is knitting (Fig. 12.1).

12.4 The compatibility of electronic signals and knitting data

Electronic devices process information as binary digital logic signals that exist in two states, *ON* or *OFF*. This can be directly translated as *1* or *0*, *YES* or *NO*, *TRUE* or *FALSE*, or magnetic *ATTRACTION* or *REPULSION*.

This information can just as conveniently be translated into knitting states such as *KNIT* or *TUCK*, *TUCK* or *MISS*.

The binary digits can be arranged in the form of a programme where they can be encoded and converted into symbols to compose, for example, a knitting design or a machine programme.

Skechers EX1050
Skechers v Nike

12.5 Microprocessors and computers

The most important use of electronics is in microprocessor and computer systems. A computer can receive, store, retrieve, and communicate enormous quantities of information at phenomenal speeds. It can also manipulate, rearrange, select, and transform this information. It performs arithmetical or logical processes accurately at high speed after receiving the instructions (programme) and values (data) without the need for further intervention by the operator.

Flexibility in processing of data occurs because the system can be programmed to produce *YES* or *NO* decisions, based on the result of comparing and testing monitored data, that then determine the choice of two alternative courses of action in the program of the system. These alternative courses within the main program sequence may include counted loop sequences, branching or jumping out of the main sequence, and selection of stored sub-routines.

It is these facilities that give electronically-controlled knitting pattern preparation and needle selection their extensive capabilities as compared with previously available methods. Inputs include switches, sensors on knitting machines, keyboards, light pens, tapes and discs; and outputs include actuators on knitting machines, lights, digital and graphical displays, tapes, and printers. Outside the system, the digital impulses may be changed from parallel to serial, or even analogue, form, or may be converted into light, sound, radio or carrier waves, or mechanical movements.

Although it is possible to directly program a system using switches, a matrix board, a keyboard or another input device, the processor (and probably the knitting machine) will be held waiting during this time-consuming operation. It is therefore preferable to record the program and data in an auxiliary memory store such as a tape or disc. Its contents can be rapidly inputted electronically into internal memory, as required, whilst using a direct input keyboard or switches for minor amendments or alterations during the running of the programme.

Some systems are programmed to interact with the operative who is thus able, within specified and guided limits, to change values of data, with the effects of the amendments being visually indicated by the system.

12.6 The computerised knitting machine

Although knitting is still a mechanical action between the yarn and the knitting elements, the design of tomorrow's machines will be increasingly influenced by the facilities offered by electronics (Fig. 19.13). Thus, whereas on mechanically-controlled knitting machines nearly all the mechanical movements are linked to, and are triggered by, the revolution of the machine or traverse of the cam carriage, electronic controls can be dispersed and separately operated.

In addition, their operation can be smoothly introduced in a series of gradual steps and not in a restricted number of large steps, as is the case with mechanical drive systems.

The electronically-controlled knitting machine can be part of a network of management communication links. A single control unit can control a complete bank of machines if necessary.

Unlike the mechanically-controlled machine, which is passively operated, stands alone and has no means of receiving and transmitting electronically generated data,

Skechers EX1050
Skechers v Nike

Fig. 12.2 Knitting patterns and programmes are quickly generated using automatic routines. These are checked and can be transmitted on-line to the CMS knitting machine. Simultaneous monitoring of production can also be achieved [Stoll SIRIX].

the increasing automatic monitoring and adjustment facilities provided by microprocessor control on modern machines obviates the need for continual manual attention (Fig. 12.2).

Perhaps electronics has had its greatest impact in V-bed flat knitting, as a major factor in the successful development of shaping techniques (Chapter 19).

Electronics is also increasingly being employed in 'intelligent' stop motions, yarn feed systems, the design and preparation of knitting patterns, machine function control, pattern selection and striping.

12.7 Computer graphics and pattern preparation

Of all knitting machines, the modern electronic V-bed flat machine, with its comprehensive patterning and garment shaping facilities, offers the greatest challenges as well as the greatest opportunities for the application of a CAD/CAM system (Fig. 12.3).

Interactive computer graphics enables a dialogue to occur between the operator terminal and the system, with the resulting development of the design being immediately visually represented on the screen. The position is defined and located by two numbers in the Cartesian co-ordinate system. On the horizontal (X) axis, the numbering increases positively from zero towards the right, whilst on the vertical (Y) axis, the numbering increases positively upwards from zero at any point on the design.

Skechers EX1050
Skechers v Nike

Fig. 12.3 The simulated knit package is mapped onto an image of a model to simulate the appearance of the final product. This image can also be used for evaluation and sales promotion purposes [Shima Seiki].

Skechers EX1050
Skechers v Nike

Generally, an input device is employed that can be moved by hand in the direction of either axis, with its location and movement over the screen being indicated by a special character symbol termed a cursor. The physical movement of input devices such as digitizers, joysticks, and trackballs is converted by the system into the series of numbers, whereas a light pen detects the presence of light whose position is being generated on the screen.

Computer graphics provides a tool for the efficient creation and development of designs and overcomes tedious and repetitious aspects, enabling realistic representations of the knitted designs and garment shapes to be prepared, to be easily modified on the screen, and to be outputted as accurate, to-scale, coloured, hard-copy prints. It provides a much quicker response to customer requests than is possible with traditional knit sampling techniques whilst postponing the expensive knitting operation until such requirements have been fully identified. Recognised standards for these systems are now becoming established so that there will be greater compatibility in the future and choice of system will be less dependent upon the preference for a particular make of knitting machine.

The *Quantel Paintbox* has established the standard for an interactive computer graphic design system. It consists of a digitising table, a pressure-sensitive stylus, an interactive computer with integral software, a digital frame store, hard disc storage and a colour monitor that communicates commands via menus displayed on the screen.

Selections include colour, brush size, paint mode, and the automatic drawing of various shapes and structures. Enclosed areas of the design may be filled in with a colour (if this facility is available) and the locations of the colours may be exchanged. Stored sub-routines may also be recalled to assist with the development of the design.

By relating the co-ordinate points of the design to other co-ordinate points within the design area, the design can be rapidly modified, with motifs being multiplied in number or geometrically transformed. Each transformation may occur separately or as a combined effect: for example, a motif may be reflected (mirror imaged) across the width (the X axis) or the depth (Y axis) of the design area. It can be translated (moved in a straight line without altering its appearance), rotated (moved in a circular path around a centre of rotation), and scaled (increased or decreased in size along the X or Y axis or along both axes). Graphic capabilities are obviously dependent upon the type of system and its software. Electronic pattern preparation thus provides the designer with an immediate visual representation of the design as it is being conceived, amended, and edited, without recourse to the knitting of trial swatches (Figures 12.3 and 12.4). The grading of sizes [1] and the introduction, manipulation and placing of shapes and colours, is achieved with the minimum of effort and the elimination of all tedious and repetitious actions.

The program can be structured to guide and assist the designer and thus ensure that the resultant design is compatible with the knitting machine and the end-use requirements. Once a satisfactory design is achieved, a permanent record may be outputted onto hard copy and/or onto a carrier acceptable for controlling the knitting machine.

Not only is a programme required for knitting the fabric structure, one is also required for knitting the garment-length sequence, and a further programme is required for shaping. Many automatic modules are already installed that can be quickly recalled and 'seamlessly' co-operate with each other. The technician is

Skechers EX1050
Skechers v Nike

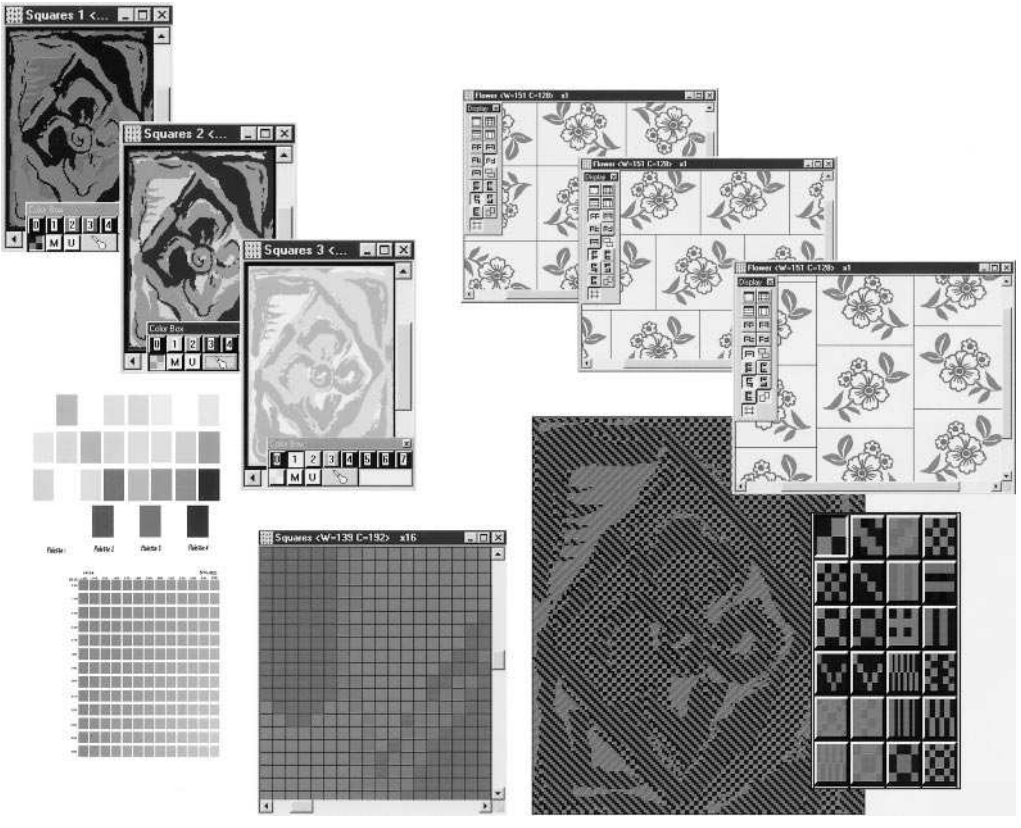

Fig. 12.4 MKS knitting system for Windows [Monarch].

guided throughout his programming by software that recognises the constraints imposed by the fabric and the technical specification of the knitting machine.

12.8 The Stoll CAD pattern preparation system

The *Stoll SIRIX* is a complete design, patterning and programming system originally specially developed from *Apple II* PC software. It caters for every application in V-bed flat knitting. It uses icons and windows to graphically support the generation and development of knitting programmes for *Stoll CMS* electronic flat machines. *SIRIX* has a hierarchy of files holding folders. These can be opened by a double click of the mouse on an icon. It simplifies pattern drafting and speeds-up the processes required in the production of knitted fabric and garments. Fabric depiction and programme drafting is carried out on-screen, without the need to interrupt production on the machine.

The multi-tasking facility permits simultaneous operation of a wide variety of programmes. These are controlled via the graphically-oriented user interface. Patterns can be designed using jacquard colours and the *Sintral* programming language, or directly by defining stitches and modules. These can then be transformed automatically into a knitting programme simply by pressing a button. *Sintral* is the text

Skechers EX1050
Skechers v Nike

editor, which facilitates the creation of knitting programmes using plain language instructions. Designs or programmes are analysed, processed and tested, then automatically translated into *Sintral*, then presented to the monitor or loaded into the machine.

The *design programme* is a 'Paint' programme that provides a palette of colours, shades, brush shapes and sizes, and design tools.

Using the *yarn programme*, yarn types, shades, and textures can be generated and stored to closely simulate knitted panels, in advance of the knitting process.

Sophisticated colour printers can produce realistic images of the garment which, it is hoped, will reduce the time-consuming process of swatching and sample development on the knitting machine. Once the design is completed, a model can be called-up onto the screen whose three-dimensional appearance simulates the wearing of a garment made from the design.

A recognition that designers and technicians require different information as the sample is developed has led to the provision of two separate but linked and constantly up-dated screen windows. The *technical window* presents the developing design in the form of running thread notations and technical data, whereas the *design window* shows the design as a knitted structure. Each can be displayed as and when required, and changes on one are automatically up-dated on the other (Fig. 12.5).

The *grid* or *raster programme* works with peripheral input devices including scanners and cameras, or any programme containing an image. It adjusts images to the correct size for the number of wales and courses in the required design. An automatic *colour reduction programme* reduces the number of shades to the number of yarn colours to be used in the jacquard design.

The *jacquard programme* takes over after the grid programme, and has an extensive tool and colour palette (Fig. 12.6). The pattern field and stitch size are selected and the pattern motif is drawn onto a grid. Patterns can be depicted in the form of colours, stitch icons, or *Sintral* symbols. Stored designs can be called up. Shapes and areas can be re-scaled, manipulated, rotated, flipped, multiplied, deleted, or interchanged. Whilst a motif is being moved, it becomes transparent, so that the background can be seen through it, thus making it easier to accurately position.

Structure patterns are drawn using stitch icons that graphically depict stitch appearance. Pattern elements, such as cables, Aran and lace, are available in modules to build into the programme. The computer translates into machine language other relevant information that can be inputted by the designer, such as *yarn carrier allocation* and *knitted stitch sizes*.

The *intarsia programme* enables complex programmes for the production of intarsia designs to be generated almost completely automatically, based on following the rules of intarsia knitting. The pattern sketch is converted into an intarsia design in several stages. Intarsia designs are drawn using intarsia stitch icons for colours, structure and, if required, ladder backing. From the intarsia motifs on the screen, the *SIRIX* generates individual colour fields that are allocated to individual yarn feeders. The programme step '*Yarn Feeder*' works out the best starting point for the yarn feeder and inserts the lines necessary to position it. From the intarsia pattern needle selection, feeder paths and, if required, ladder backing on the rear bed is generated.

In the *shaping (fully-fashioned) programme*, the shape of the panel, e.g. sleeve, back, or front with a V-neck, is superimposed graphically over the ground pattern.

Skechers EX1050
Skechers v Nike

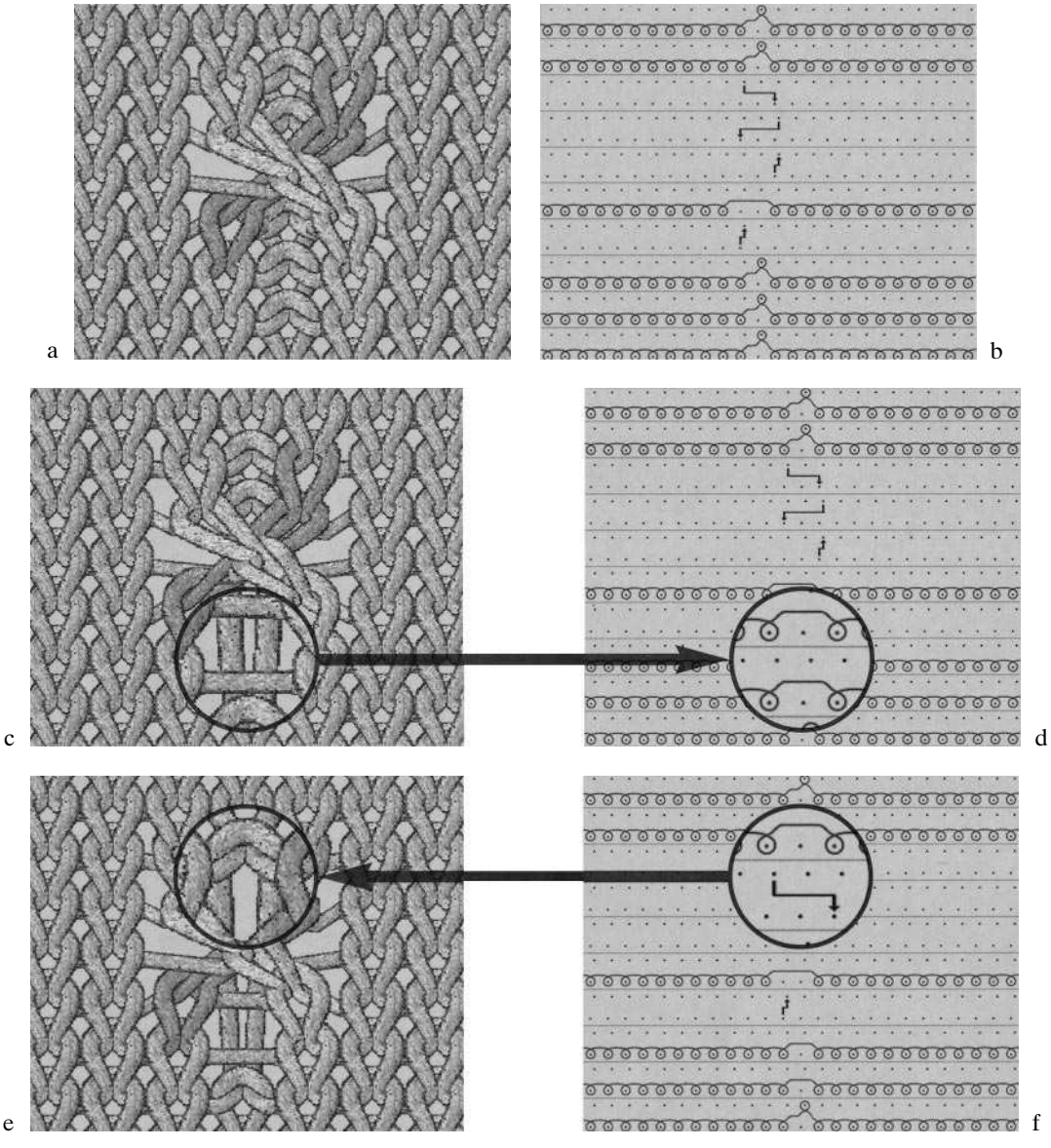

Fig. 12.5 Linked windows options of fabric view and technical view [Stoll].

Cables and Aran motifs are automatically faded-out at the selvedges. A complete automatic-knitting programme is generated from a drawn shape (Fig. 12.6).

A garment shape is selected from the file, inserted in the form of an area over the jacquard, and positioned where required. The width of the selvedge area can be varied and different stitch structures selected. The shape is cut out of the jacquard.

Narrowing modules are automatically inserted to give the required shape. The *FF programme* generates the *Sintral* programme that contains all the necessary data

Skechers EX1050
Skechers v Nike

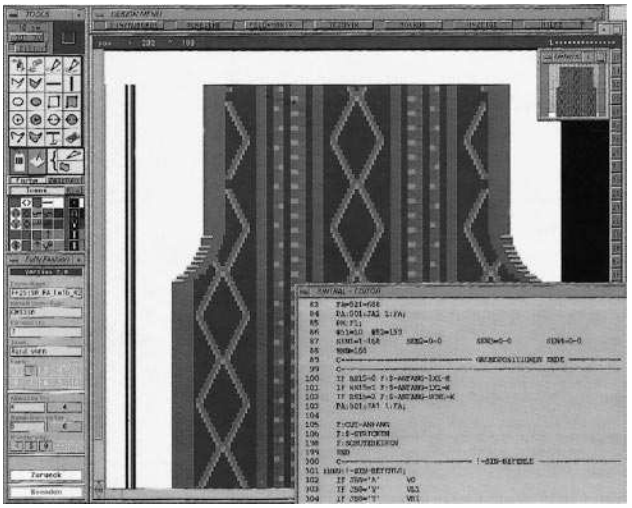

Fig. 12.6 The FF programme inserts the control columns and, using the existing jacquard, generates the Sintral programme, which contains all the necessary data for machine control [Stoll].

for machine control. The *module programme* breaks the modules down into complete knitting sequences. Stitch transfers can be programmed automatically.

The programme *Sirix Auto-Sintral* automatically generates the complete *Sintral* knitting programme. Starts and repeats for size changes can be selected. Once one size has been knitted, the CMS machine automatically changes-over to producing the next size.

The *analyse programme* tests the knitting programme, line-by-line, using an internal analysis routine, simulating without involving the knitting machine. Knitting information such as needle selection, yarn feeders, racking, etc. are carried in a programme log and can be assessed at any time. The *selection programme* presents the *analyse* data, course by course, in notation form, permitting rapid checking of pattern accuracy.

The *DIM 3 programme* permits the three-dimensional representation of knitted fabric on the screen. This can be enlarged, rotated and manipulated, from the face or reverse, at any angle. The fabric can be appraised as a whole or in fine detail.

On-line generates a direct connection to all the machines in the plant. Knitting programmes are transferred, on-line, to and from the knitting machines on the network, and production sequences are centrally controlled. Data on machine stoppages and reasons, as well as on production progress can be collected.

Tele-Service provides long-distance data transmission of knitting programmes as well as remote diagnosis of CMS flat knitting machines and *SIRIX* pattern-preparation systems.

On the CMS machine, the touch control screen displays pictogram symbols providing information on the progress of knitting production such as knitting speeds, settings of cams, yarn feeders and fabric take-down. Patterns and garment programme sequences can be read into the machine memory, either from floppy discs or directly on-line from the pattern-preparation unit.

Skechers EX1050
Skechers v Nike

12.9 The Shima total design system

Since developing the *Micro SDS* pattern preparation system, *Shima* have introduced a series of systems with improved hardware and software according to industry's needs.

The *Shima Total Design System* is a totally-integrated knit production system that allows all stages – planning, design, evaluation, production, and sales promotion – to be integrated into a smooth work-flow:

1 The designer, using computer-graphic paint software and a pressure-sensitive airbrush, creates concept drawings. Scanned-in images can be used to create storyboards.
2 A fully-fashioned pattern for shaping is created, using a pattern CAD program for knitting. The working pattern is then displayed using *KnitPaint* software. Courses and wales are converted into numbers of loops. Jacquard, intarsia and structure patterns can be created separately.
3 When each pattern is complete, *KnitPaint* automatically combines all patterns into usable knitting data, customised to the required *Shima* machine. Machine data is converted for intarsia using the *auto yarn carrier selection function*.
4 The *loop simulation programme* uses yarns either scanned or painted or created by the *yarn creation programme*.
5 The resulting simulated knit pattern can then be draped onto models using the *mesh-mapping function*. A mesh grid is created to conform to each fully-fashioned piece, such as the front body, back body, and sleeves, and the simulated knit pattern is draped directly over that piece. The *mesh mapping* allows shadows and wrinkles to be maintained from the original image.
6 A database of models wearing various types of knitwear (V-neck, crewe neck, cardigan, etc) for which the mesh grids are ready-made is available.

Reference

1. ALDRICH, W. (ed.), *CAD in clothing and textiles*, (1992), Blackwells, Oxford, UK.

Further information

NAKASHIMA, T., The development of computer graphic knit design, *Knit. Int.*, (1995), July 26–9.
SCHLOTTERER, H., Sirix – A user-friendly pattern development system, *Knit. Tech.*, (1995), 1, 18–20; 2, 81–3.

Skechers EX1050
Skechers v Nike

13

Circular fabric knitting

13.1 Weft knitted fabric production

Weft knitted fabrics may be approximately divided into single or double jersey ('double-knit') according to whether they were knitted with one or two sets of needles. It may be preferable to include some of these fabrics in separate groupings of underwear and speciality fabrics. Pelerine eyelet, sinker wheel mesh structures, and float plated fabrics are mainly used for underwear whilst high pile and plush fabrics are speciality fabrics. Many of the jacquard structures have already been described (Chapter 10).

Most weft knitted fabric in continuous lengths is knitted on large-diameter, multi-feeder, latch needle machines and is slit into open width during finishing. The emphasis is on productive efficiency and quality-control in the manufacture, finishing, and conversion of fabric into articles of apparel or other end-usages. This tends to encourage the establishment of large units with long production runs.

In post-knitting handling operations, the fabric must be maintained in as relaxed and tension-free a state as possible, in order to reduce the problems caused by dimensional distortion and shrinkage. Apart from scouring, bleaching, dyeing, and printing, the finishing process offers a wide range of techniques for modifying the properties of the knitted structure including heat setting, stentering, decating [1], raising [2], cropping, pleating [3] and laminating.

In the cutting room, the lengths of fabric are layed-up, many ply thicknesses deep, onto long cutting tables using a traversing carriage to transport and lay the fabric. Cutting-out techniques vary widely, from marked lays whose outlines are followed by hand-guided cutting knives, to press cutter blades shaped to the outline of the garment part, and cutting blades guided by a computerised programme.

In making-up weft knitted fabric, the lockstitch seam (Type 301) is not as suitable as it is for woven fabrics because it lacks extensibility. For jerseywear, the extensible double-locked chainstitch (Type 401) is useful. However, in the making-up of knitwear, the three-thread overlock (Type 504) is popular because, as well as being extensible, it securely binds the cut edges of the fabric after neatly trimming them.

Skechers EX1050
Skechers v Nike

For comfort in underwear and lingerie, a flat-butted seam secured by a flat seam such as the five-thread flatlock (Type 605) is generally preferred [4–6].

13.2 Single- and double-jersey compared

Single-jersey fabrics are mostly knitted on latch needle sinker top machines. These machines have a simpler construction than cylinder and dial machines, are easier to supervise and maintain, have higher running speeds and more feeders, and knit a greater range of structures with a wider tolerance of yarn counts.

In Europe, double jersey was generally preferred to single jersey, particularly for ladies' wear, because of problems of dimensional stability, structural breakdown, air porosity and snagging of floating threads. However, fashion trends since 1973 towards prints, fine-gauge lightweight fabrics and leisure wear, have increased the world popularity of single jersey to a level previously only experienced in the USA.

13.3 Simple tuck and float stitch single-jersey fabrics

Figure 13.1 illustrates the notations of some simple single-jersey fabrics, whilst Fig. 13.2 illustrates a loop diagram of *hopsack*, a single-jersey inlaid fabric.

In order to tie a lay-in yarn into the back of a single-jersey structure, selected needles are raised to tuck height to receive the lay-in yarn at a point in advance of the ground knitting feeder. The needles are then raised to clearing height prior to receiving and knitting the ground yarn.

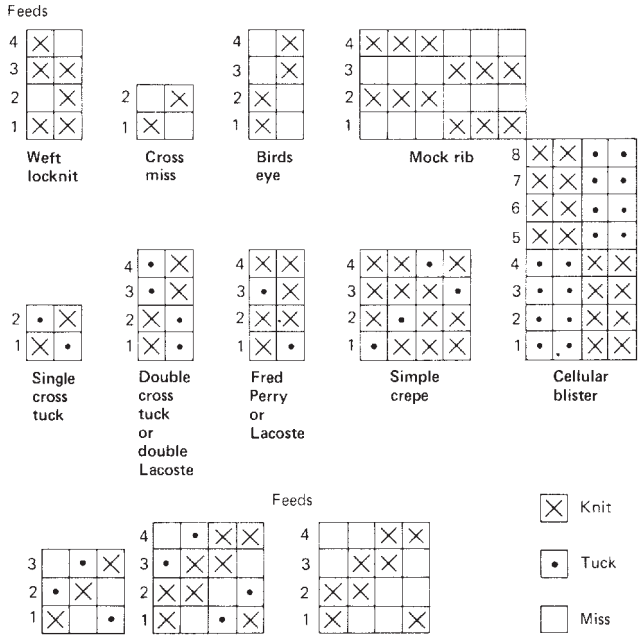

Fig. 13.1 Twill effects.

Skechers EX1050
Skechers v Nike

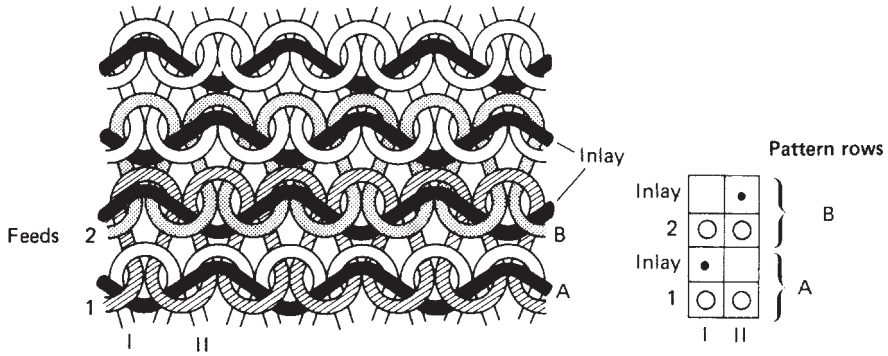

Fig. 13.2 Single jersey hopsack structure and notation.

Hopsack is a 1 × 1 inlay whose stability and appearance make it popular as a ladies suiting fabric when knitting staple spun yarns. In order to spread the inlay across the back of the fabric, it is the practice to centre the tuck on a different wale at the next inlay cycle.

Another popular structure is a 2 × 2 inlay with a plain ground course between each ground inlay course. The tuck limbs of the lay-in yarns are crossed by the sinker loops on the technical back, so they tend to grin through onto the technical face, especially as they push the two adjacent wales slightly apart at these points. This problem may be overcome with a plated yarn arrangement as in the case of *invisible fleecy*, which is, of course, a more expensive fabric to manufacture.

13.4 The history of double-jersey

Double-jersey suiting fabrics evolved in France using French spun yarns, with miss stitches introduced to improve the stability of the interlock or rib base. In the early 1950s, *Berridge* of Leicester, UK, produced the first specific-purpose machine capable of knitting these structures. The twelve-feed machine had a revolving cam-box with interlock needle tracks in cylinder and dial, and was the forerunner of the modern revolving-cylinder double-jersey machine that now has changeable camming for knit, tuck or miss stitches, and rib or interlock gating facilities.

Double-jersey achieved its success with 18 gauge, 30-inch diameter machines knitting 1/36's worsted or acrylic fibre yarns for ladies' autumn or winter suitings and dresswear, and 150 denier continuous filament textured polyester for spring and summer wear. Expansion started in Europe in the late 1950s, when worsted or *Courtelle* yarns were knitted into an evolving range of stable structures that were finished on continuous-finishing equipment adapted from woven cloth processes.

Between 1963 and 1973, yarn consumption in double jersey increased from 6 M kg to 90 M kg, of which 70 M kg was continuous filament. *Crimplene* polyester yarn played a major part in this expansion, taking nearly 50 per cent of the market in 1969. Being non-torque, it could be used in singles form and had low shrinkage and low extension. The high 5 denier per filament (1/150/30 denier) yarn provided a crisp, resilient handle and was less prone to snagging. To mask the effect of feeder

Skechers EX1050
Skechers v Nike

stripiness, it was introduced in surface interest structures such as *cloque* (single colour patterned blister) and *bourrelet* (horizontal relief stripes).

Soon, bright package-dyed yarns were being used to knit patterned blister fabrics. Fashion moved away from plain fabrics, such as *double pique*, to demand colour and surface texture with easy washability and lighter weights for use in centrally-heated environments.

In the early 1970's, attempts were made, with limited success, particularly in the USA, to break into men's leisurewear with a switch to E 22 and E 24 gauge machines, using 120–135 denier textured yarn. This finer gauge was necessary in order to obtain lighter weights and achieve more critical standards of stitch definition, and resistance to snagging, bagging, air porosity and shrinkage.

However, 1973 proved to be the peak year of the narrowly-based double-jersey boom, as an over-expanded industry failed to penetrate into new fields and at the same time received a rebuff from ladies' fashion, which was turning to natural fibres and woven cloths as a change from textured polyester. Whereas the proportion of double-jersey to single-jersey fabrics was 1:0.4 in 1975, by 1981 it was 1:0.9. The double-jersey industry is now smaller and uses a wider range of yarn types and counts and gauges, ranging to as fine as E 28 for rib jacquard and E 40 for interlock print-base fabrics.

13.5 Types of double-jersey structure

There are two types of double-jersey structure – non-jacquard structures, knitted mainly on a type of modified interlock machine, and jacquard structures, produced on rib jacquard machines (The latter are covered in Section 10.4.4).

Various modifications to the interlock machine have been necessary in order to produce the new structures. Originally, only alternate tricks were fully cut through to accommodate long needles so that mock eight-lock was achieved by knitting normal interlock with every third dial needle removed; now, all tricks are cut through and inserts placed in tricks under short needles. Verge bits are required for knock-over during single-bed knitting; other modifications may include exchangeable or changeable knit, tuck and miss camming, variable needle timing, rib/interlock-gating and feeder guide positioning.

13.6 Non-jacquard double-jersey structures

Most interlock variation structures have six- or eight-feeder sequences, as only alternate needles in one bed are in action in a course. *Single pique* or *cross tuck interlock* (Fig. 13.3a) was one of the first to be produced, by placing tuck cams in the dial at every third feeder. The tuck stitches throw the fabric out approximately 15 per cent wider than normal interlock to a satisfactory finished width of over 60 inches (approximately 1.5 m) for a 30-inch diameter machine. They break up the surface uniformity and help to mask feeder stripiness, but they also increase fabric weight.

Texi pique (Fig. 13.3b) is wider and bulkier and shows the same pique effect on both sides. *Cross miss* (Fig. 13.3d) is the knit miss equivalent of single pique, but it is narrower and lighter in weight. *Piquette* (Fig. 13.3e) is a reversible knit miss structure with a light cord effect.

Skechers EX1050
Skechers v Nike

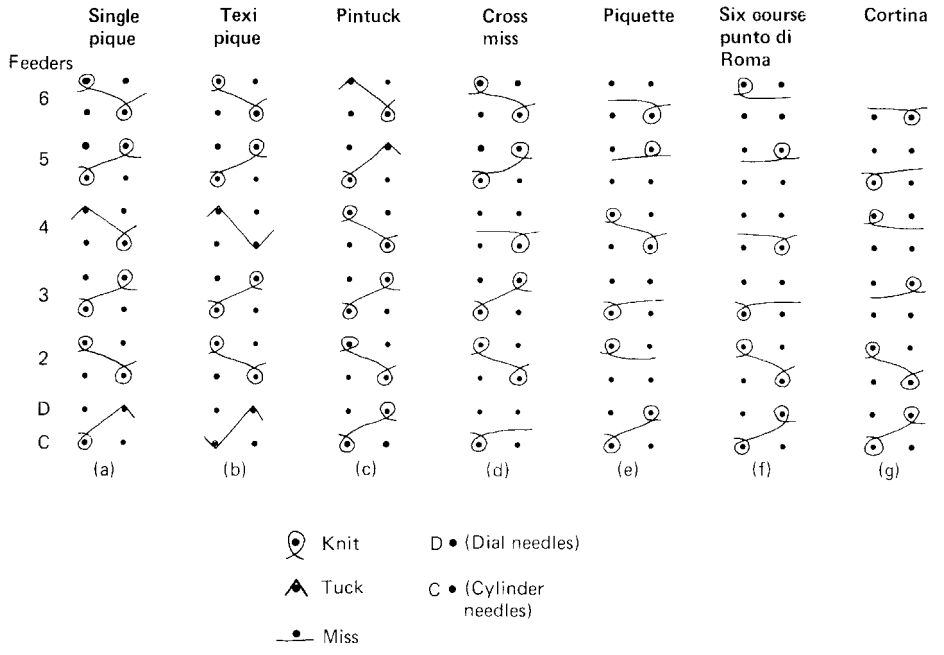

Fig. 13.3 Double jersey non-jacquard fabrics.

Bourrelet fabrics have pronounced horizontal cords at regular intervals, produced by knitting excess courses only on the cylinder needles; the cord courses may be in a different colour to the ground courses. There may be half, more than half, or less than half the total number of feeders knitting the cord courses. Interlock rather than rib base bourrelet is usually preferred because it provides a softer, smoother more regular surface with less extensibility, but it requires two feeders per cord row.

Jersey cord (Fig. 13.4a) is an example of a *miss bourrelet*, and *super Roma* (Fig. 13.4b) is its equivalent in *tuck bourrelet*. The latter, sometimes termed *horizontal ripple* fabrics, tend to be heavier and to have a less pronounced cord than the former, which are termed *ottomans* in the USA.

Costa Brava is a plain, single-colour structure that requires individual needle selection on a width of four cylinder needles. A diagonal effect is developed on two adjacent cylinder needles, which move by one needle at the first of every three-feeder sequence; the third feeder complements this. These loops are extended by the dial-only knit course at every second feeder. Alternate dial needle knitting produces a twill backing.

Gabardine (Fig. 13.5a) is a simple 2 × 2 twill 'double-blister' fabric (see below) which is useful for fine-gauge men's leisurewear. It has a four needle width repeat, with the dial needles all knitting the backing at every third (ground) feed. A flatter structure, used for the same purpose, is called *poplin* (Fig. 13.5b), a type of single blister with a two needle width repeat.

The most popular relief design is *blister* (or *cloque*), which is normally produced only on circular rib jacquard machines. Each cylinder needle is selected to knit either a ground yarn, which also is knitted on alternate dial needles, or a blister yarn

Skechers EX1050
Skechers v Nike

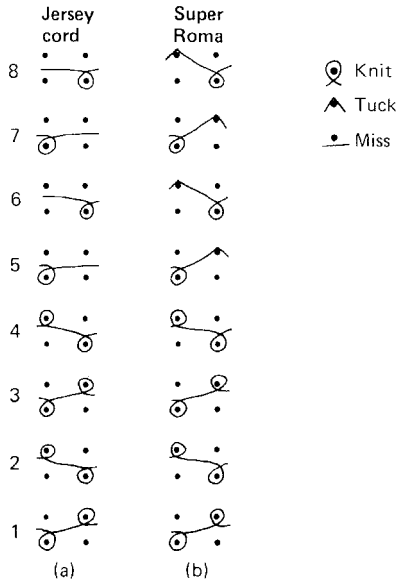

Fig. 13.4 Further double jersey fabrics.

which is only knitted on the cylinder side and floats between blister loops inside the structure, hidden by the ground loops of the face and back.

Double-blister structures have two blister feeder courses between each ground feeder course (Fig. 13.6b). This produces a more pronounced blister relief, with twice as many courses of blister loops to ground loops. It is heavier and has a slower rate of production than single blister. Blister loops at two successive feeders may not necessarily occur on the same needles. They may be in one or more colours with a self-colour or a one- or two-colour ground.

Single blister is sometimes termed *three-miss blister* (Fig. 13.6a) because each dial needle misses three feeders after knitting; similarly, double blister may be termed *five-miss blister*. All blister structures show only the ground loops on the back.

Quilted structures are types of blister fabrics where blister yarn knitting occurs on a large number of adjacent cylinder needles so that enclosed pockets, or quilts, are formed by lack of connection between cylinder and dial courses. A number of colours may be used.

Ripple designs show as figured rolls or welts on the all-dial knit side of the structure because there are more loops per wale on this side and every dial needle knits at every feeder. The cylinder needles are only selected to knit to balance the dial loops where the ripple is not required.

Double pique, *wevenit* and *overnit* are synonymous terms for the same stable knit miss rib-gated fabric (Fig. 13.7), which is narrower and has a less pronounced pique appearance than single pique and tends to be rather heavy. Although it is now also produced on rib machines, it was originally produced by modifying the interlock machine as follows:

1 Changing from interlock to rib gating.
2 Changing dial cam systems 2 and 3 over in every four-feed sequence.

Skechers EX1050
Skechers v Nike

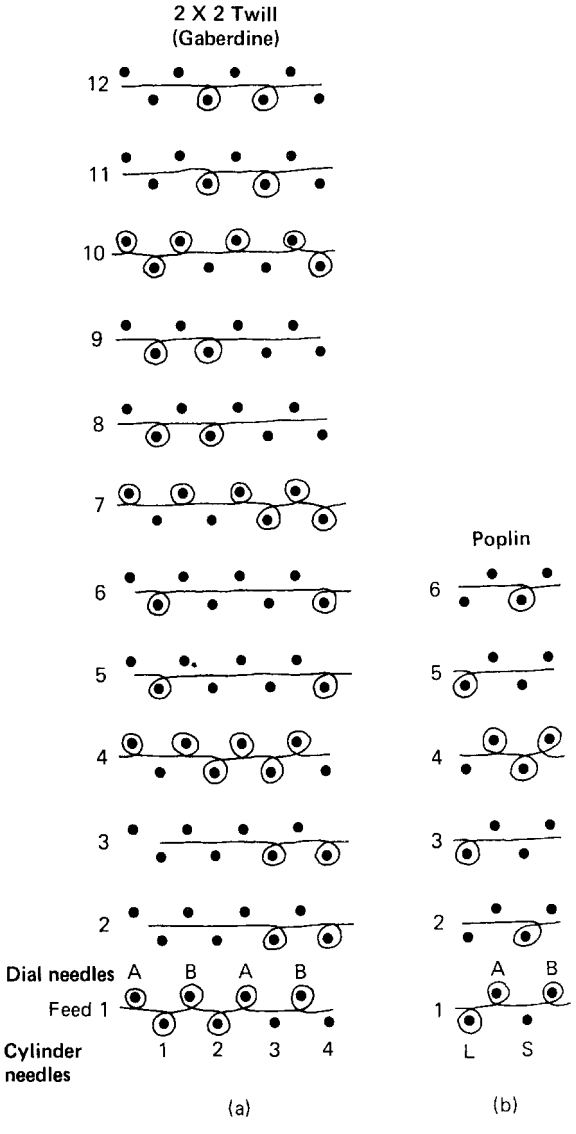

Fig. 13.5 Twill and poplin double jersey.

3 Placing all long needles only in the cylinder if *Swiss double pique* is required, or all short needles only if *French double pique* is required.

This arrangement causes all cylinder needles to knit at every alternate feeder as there are no other long cylinder needles, whilst alternate dial needles knit at two successive feeders because identical cam systems are in a two-feeder sequence in the dial. French double pique tends to be wider and slacker than Swiss double pique because, in this structure, the dial needle loops that are held for two feeders can rob extra yarn from the cylinder loops that are knitting in the same course, thus producing long, held loops. *Rodier* is a term sometimes applied to either double pique or texi pique and *mock rodier* to piquette.

Skechers EX1050
Skechers v Nike

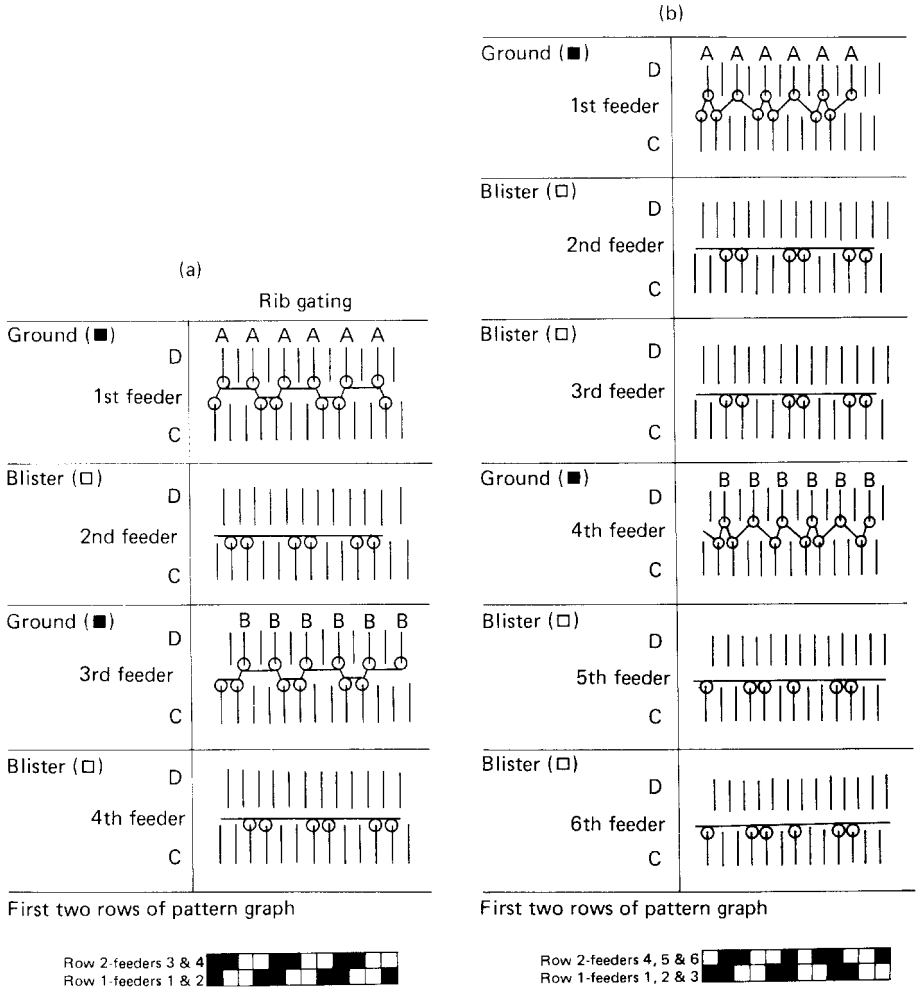

Fig. 13.6 Single and double blister.

Punto di Roma (Fig. 13.8b) has replaced double pique as the most popular non-jacquard double jersey structure. It belongs to a group of structures that are reversible and have a tubular sequence of dial only and cylinder only knit. It has an acceptable weight and finishes with a width of about 70 inches (1.77 m) from a 30-inch diameter machine.

Cortina (Fig. 13.3g) is a six feed version produced on interlock camming with run-through cams where missing is required. *Milano Rib* (Fig. 13.8c) is the rib equivalent of punto di Roma, with greater extensibility and width, and 50 per cent greater production but there is a danger of a yarn breakage causing a press-off at the all-knit course. It is particularly used in the production of fashioned collars. *Evermonte* (Fig. 13.8a) has a row of tuck stitches on one side after each tubular course, which produces a slight ripple effect.

Tuck lace or *mock transfer* (Fig. 13.9) designs consist of two fabrics knitted with different yarns or colours, one produced on the dial and the other on the cylinder.

Skechers EX1050
Skechers v Nike

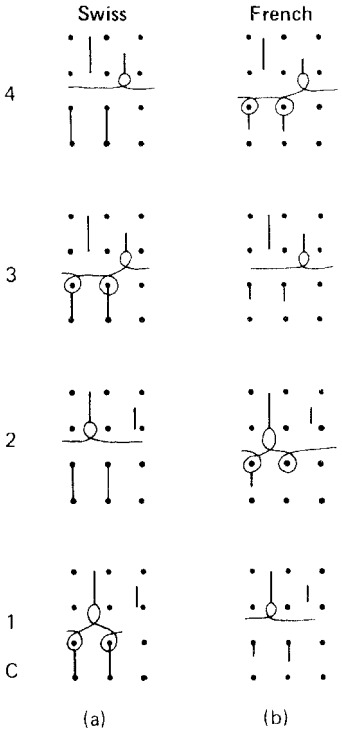

Fig. 13.7 Double pique.

Fig. 13.8 Milano, punto di Roma and evermonte.

At the all-dial-knit feeders, selected tucking may occur on alternate cylinder needles if required; often the selection is repeated at the next two-feeder sequence to emphasise the effect. The tucks produce a 'semi-breakthrough' effect by displacing the wales of the dial side, which is the effect side, so that the cylinder loops show through at these points as a different colour.

13.7 Double-jersey inlay

On double-jersey machines, laying-in may be achieved by the *tunnel inlay* technique. The inlay is fed in advance of the knitting yarn at a feed and is trapped as an almost straight horizontal yarn inside the fabric, behind the cylinder and dial face loops.

To reduce weight, the inlay is usually supplied at every third or sixth feed of a three-colour jacquard design at feeders that always knit some loops on the cylinder.

The tube inlay feed is attached to the feeder guide to supply its yarn low and in advance of the cylinder and dial needles moving out to clear for the ground yarn. To make the inlay visible and to reduce the fabric width and weight, alternate cylinder needles are removed and replaced by dummy or blank needles that prevent the tricks from closing-up or becoming clogged with dirt. Needle selection thus takes place on half-gauged cylinder needles with the inlay (either boucle or over fed yarn) protruding through between these wales.

Skechers EX1050
Skechers v Nike

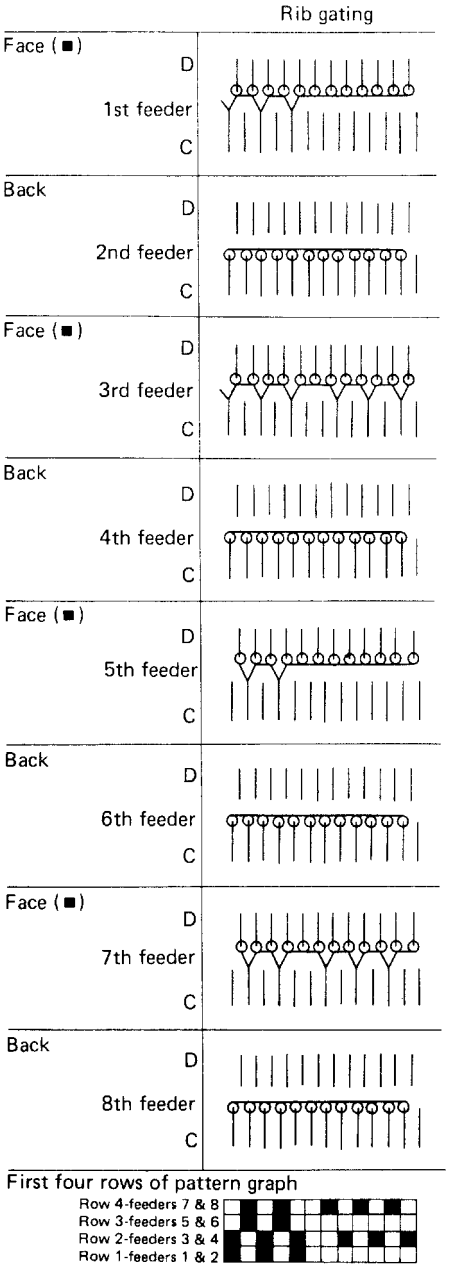

Fig. 13.9 Tuck lace.

Although tunnel inlay is a simple technique (Fig. 13.10), the yarn is not very secure when the fabric is cut into open width; also the yarn has a straight configuration, with little surplus available for elastic extension. If an elastomeric yarn is employed, there is width-wise, but no length-wise, extension and recovery.

The alternative to tunnel inlay is to use a knitting feeder for inlay by missing and tucking on one or both needle beds. *Texi pique* (Fig. 13.3b) is an example but, as

Skechers EX1050
Skechers v Nike

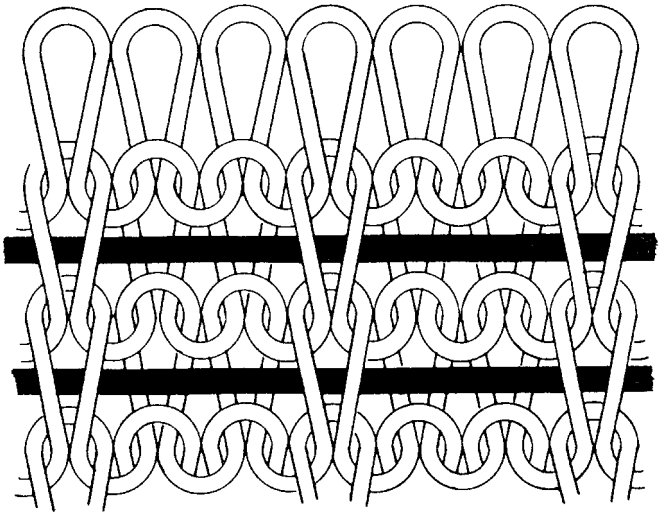

Fig. 13.10 Tunnel inlay.

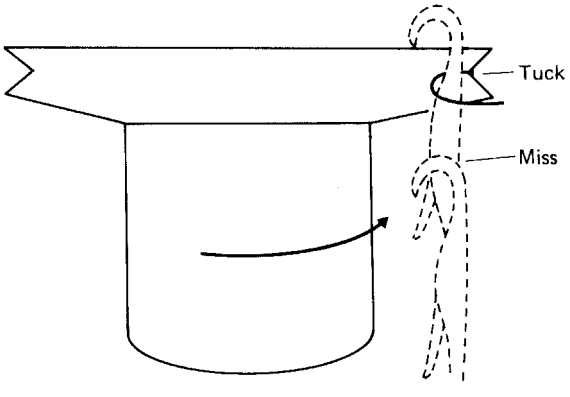

Fig. 13.11 Faneknit inlay device.

tucking occurs on both beds and the cylinder needles are full gauged, the inlay is hidden inside the structure.

The *Faneknit* device (Fig. 13.11) achieves inlay by tucking only on one bed by employing a V-bladed weft insertion wheel to which the inlay yarn is supplied, and presents it in the correct position to the needle bed. If a needle is lifted to tuck height, the blades present the yarn into its hook. Needles not lifted miss the yarn as the blades take it past the top of their heads.

13.8 The modern circular fabric knitting machine

Figure 13.12 illustrates some of the features of a modern circular fabric-producing machine that ensure that high quality fabric is knitted at speed with the minimum of supervision:

Skechers EX1050
Skechers v Nike

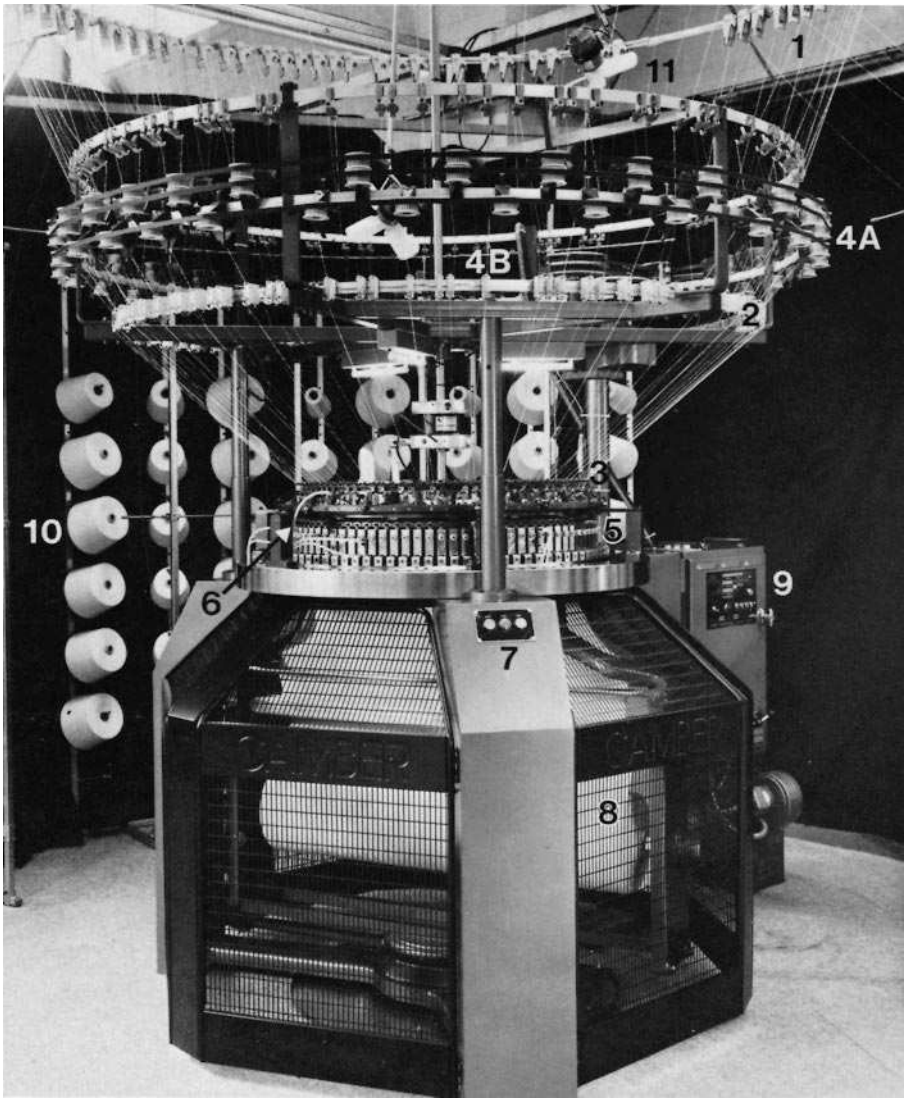

Fig. 13.12 The modern circular single jersey fabric machine.

1,2 *The top* (1) *and bottom* (2) *stop motions*. These are spring-loaded yarn supports that pivot downwards when the yarn end breaks or its tension is increased. This action releases the surplus yarn to the feeder, thus preventing a press-off, and simultaneously completes a circuit which stops the machine and illuminates an indicator warning light.

3 *Various spring-loaded detector points*. These are carefully positioned around the cylinder according to their particular function. A pointer is tripped to stop the machine by a fault or malfunctioning element such as a yarn slub, fabric lump, needle head, latch spoon, etc.

4 *The tape positive feed* (4A). This provides three different speeds (course lengths) and is driven and can be adjusted from the drive arrangement (4B).

Skechers EX1050
Skechers v Nike

5 *The cylinder needle cam system* for each feed – contained in a single replaceable section and having an exterior adjustment for the stitch cam slide.
6 *The automatic lubrication system.*
7 *Start, stop and inching buttons.*
8 *The cam-driven fabric winding down mechanism*, which revolves with the fabric tube.
9 *The revolution counters* for each of the three shifts and a pre-set counter for stopping the machine on completion of a specific fabric length (in courses).
10 *Side creel* (optional).
11 *Lint blower*. This reduces the incidence of knitted-in lint slubs, to improve quality when using open-end spun yarns. It also reduces cross-contamination by fibres from other machines.

13.9 Versatility and quick response

Market requirements involving smaller orders and shorter production runs have led machine builders to develop quick-response techniques to reduce costs and downtime during machine changes on large diameter multi-feeder machines. Amongst areas addressed are the following:

- *Centralised stitch control* can be used to simultaneously reset all cylinder stitch cams in a particular cam track, when required, instead of the time-consuming task of resetting each stitch cam individually
- *The Monarch/Fukuhara rotary drop cam system* is a unique, quick and convenient method of changing cam set-outs without the need to replace cams or needles. On the outside of the dial and the cylinder cam system at each feed and needle track there is a disc that can be set by a turnkey to various rotational positions up to 180 degrees. Each position corresponds to a specific needle-height position: for example, knit (delayed timing), knit (synchronised timing), tuck, miss and fabric support (for the other bed when only that is knitting, e.g. in double blister). The new cam setting drops into action as a small group of half-butt needles pass across it and are unaffected. As the machine slowly turns, the cams then come fully into action to control the full-butt needles.
- *Changes of diameter and/or gauge.* The three-leg portal frame provides sufficient space between pillars to enable dial and cylinder to be removed horizontally. A gauge change on a single-jersey jacquard machine can take a few hours; on a double-jersey machine it can take $1\frac{1}{2}$ to 2 days. Gauge changing costs 20 to 25 per cent of the machine cost price; diameter changing costs 30 to 40 per cent.
- *Compatibility of modules between machine types* provides for quicker conversion and changes of knitted structure at a lower cost in extra parts. Monarch/Fukuhara have conversion kits to interchange between high-speed rib or interlock knitting and versatile eight-lock knitting. With the conversion kit, changes from E 14–E 18 gauge rib to E 18–E 28 gauge interlock or eight-lock takes minutes rather than hours.
- Machines with *industrial frames* can accommodate cylinders up to 38 inches for single-jersey and 42 inches for double-jersey, with fabric batch rolls up to 105 cm.

Skechers EX1050
Skechers v Nike

- *Automatic doffing of fabric rolls* and their ejection from the machine has been developed only as far as the prototype.

13.10 The 'contra' knitting technique

On certain single-jersey machines, the '*contra*' ('*relative*' or '*shared loop*') knitting technique is now employed, for example by the Mayer method (Fig. 13.13). As well as having the normal radial movement between the needles, the sinkers move vertically down, in opposition to the needles rise to clearing height, and rise as the needles descend to knock-over. This considerably reduces the extent of the needle movement. One loop is almost fully formed before the next is started. There are thus less yarn/metal contact points (each of which doubles the tension of the previous point). This reduces the tendency to 'rob back', produces less stress on the knitting elements, improves fabric quality, and enables weak and delicate yarns to be knitted. The shorter needle movement allows shallower cam angles and faster speeds to be obtained.

Two different approaches are being used:

- The *Mayer Relanit* uses specially designed sinkers that occupy adjacent cylinder tricks to the needles, thus dispensing with the sinker cam ring and improving accessibility. The sinkers pivot on a fulcrum point that produces the horizontal

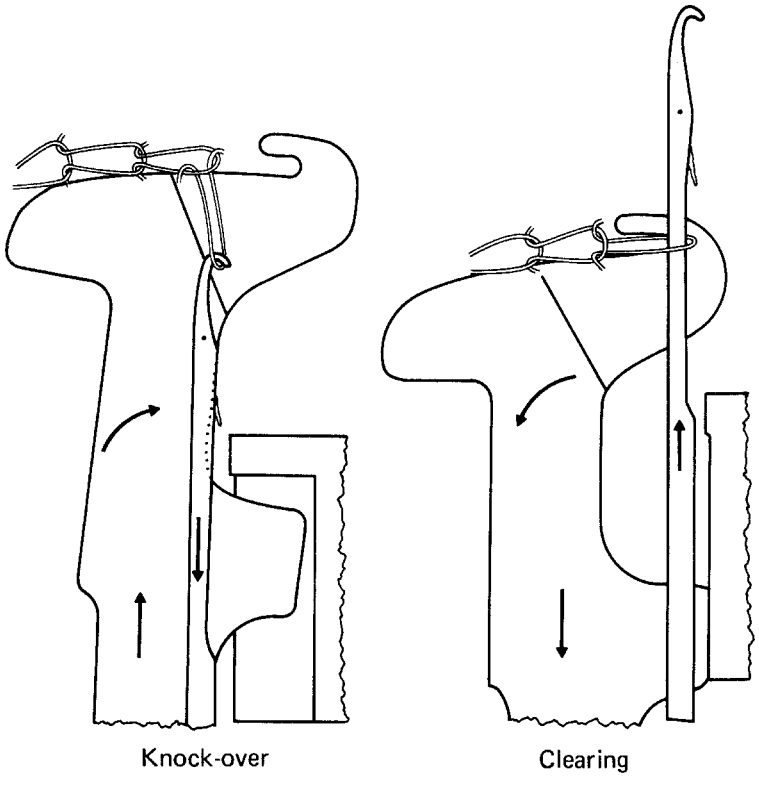

Fig. 13.13 The Relanit contra knitting action.

Skechers EX1050
Skechers v Nike

movement. It is the setting of the sinkers at knock-over, and not the needles, that determines the stitch length. As well as the Relanit 3.2, which knits bulk quantities of basic single jersey and runs at 45 rpm with a 30-inch diameter cylinder (1.8 m/sec), there are also electronic full jacquard single-jersey machines with three-way selection.

- The *Monarch 'Z'* or *'Slant Sinker' technology* employs conventional holding down/ knock-over sinkers that move diagonally along a 20 degree inclined dial. The sinker top has a fixed inclination to the needle hook; this ensures a controlled plating relationship between the pile and ground yarns.

13.11 Circular-machine production calculations

13.11.1 Machine speed

The speed of a circular machine may be expressed in three ways: –

- As *machine revolutions* per minute.
- As *circumferential speed* in metres per second.
- As *Speed Factor* (rpm × diameter in inches).

1 The *machine revolutions per minute* is only relevant to a specific machine and machine diameter. A larger-diameter machine, or one having more patterning facilities, would be expected to run at less revolution per minute
2 The *circumferential speed* in metres per second is a constant for a range of machine diameters of the same model and can be used to calculate the rpm for a particular machine diameter. An average circumferential speed is about 1.5 m/sec; 2 m/sec is 'high speed'.

   Example: A 30-inch diameter machine runs at 40 rpm.
   Circumference of circle = πd, where $\pi = 3.142$, and $d = 30$ inches.
   $\pi d = 94.26$ inches, or 239.4 cm (2.4 m).
   In one minute the machine turns 2.4 metres × 40 (rev) = 96 m.
   The circumferential speed is therefore 96/60 = 1.6 m/sec.
   To convert circumferential speed to rpm:
   1.6 m/sec × 60 = 96 m/min.
   96 m/min divided by 2.4 = 40 rpm for a 30-inch diameter machine.
3 The *Speed Factor (SF)* is a constant obtained by multiplying the rpm (e.g. 30) by the diameter in inches (e.g. 30) = 900. As can be seen, rpm and diameter vary inversely to each other – when the diameter increases, the rpm decrease.

Modern high-speed fabric machines can operate in factory conditions at speeds of 1.6 to 1.7 m/sec. Under laboratory conditions, speeds of 2.0 m/sec have been achieved.

13.11.2 Number of feeds

The number of feeds can be expressed as a *total* for a particular cylinder diameter or as the *number of feeds per inch of the cylinder diameter*, in which case the total number of feeds for any cylinder diameter in that particular range of machinery can then be calculated.

Example: A single-jersey 4-track machine with 3 feeds per *diametral inch* will

Skechers EX1050
Skechers v Nike

have 12 × 3 = 36 feeds in a 12-inch diameter, 54 in an 18-inch diameter, 90 in a 30-inch diameter, and 102 feeds in a 34-inch diameter.

13.11.3 Speed of fabric production

The speed of fabric formation expressed in linear metres per hour is equal to (speed of machine in rpm × percent efficiency × number of knitting feeders × 60 minutes) ÷ (number of feeds per face course × face courses per cm × 100).

Example: Calculate the length in metres of a plain, single-jersey fabric knitted at 16 courses/cm on a 26-inch diameter 28-gauge circular machine having 104 feeds. The machine operates for 8 hours at 29 rpm at 95 per cent efficiency.

$$\text{Number of courses knitted in 8 hours} = \frac{8 \times 29 \times 104 \times 95 \times 60}{100}$$

$$\text{Therefore the total length of the fabric in metres} = \frac{8 \times 29 \times 104 \times 95 \times 60}{16 \times 100 \times 100}$$

$$= 859.6 \text{ metres}$$

References

1. HOWARTH, E. and SCOTT, P., A new approach to knit fabric decating, *Knit. Times*, (1979), 24 Sept., 7, 12–14.
2. HOWARTH, E. and SCOTT, P., New techniques in fabric raising, *Knit. Times*, (1979), 9 July, 11–13.
3. HEMPEL, E., Pleated and folded, *Textile Asia*, (1980) June, 72–4.
4. ANON., Clothing Institute Information Sheet Number 4, *Some facts about stitches and seams*, London, UK.
5. ANON., Fabricating knitted fabrics into garments, *Knit. Times Yr. Bk.*, (1977), 163–73.
6. ANON., Basic sewing stitches and seams to assemble knitted outerwear, *Knit. Times Yr. Bk.*, (1978), 24 July, 13–18.

Further information

ANON., Z-series technology, *Knit. Int.*, (1991), March, 19–21.

ANON., Mayer & Cie, *Knit. Int.*, (1993), Aug., 13–17.

ANON., 50 years of circular yardgoods machinery, *Knit. O'wr Times Yr. Bk.*, (1968), 237–41.

ANON., Camber company profile, *Knit. Int.*, (1993) Sept., 23–7.

BATCHELOR, C. W., Double jersey knitting and patterning, *Hos. Trade J.*, (1972), (reprint of series of 9 articles published between April 1971 and June 1972).

BROWN, T. D., *Wool in double jersey*, (1973), Merrow Technical Library.

IYER, C., MAMMELL, B. and SCHACH, W., *Circular Knitting*, (1995 second ed.), Meisenbach Bamberg, Germany, ISBN 3875250664. (Based on the range of machines built by *Mayer and Cie.*, this book covers technology, structures, yarns and the quality control of large-diameter machines.)

LANCASHIRE, J. B., Non-jacquard double jersey structures, *Hos. Trade J.*, (1962), May, 92–4; (1965), Jan., 78–80; (1971), March, 92–5.

LANCASHIRE, J. B., Focus on fine gauge single jersey, *Hos. Trade J.*, (1972), Sept., 118–23.

MILLINGTON, J., ITMA 99 circular machinery review, *Knit. Int.*, (1999), Aug., 25–32.

PHILIP, M., An autobiography (1990) Philip Knitting Mills, Bronx, New York, N.Y., USA.

REICHMAN, C., *Doubleknit Fabric Manual*, (1961) *Nat. Knit. O'wr Assoc.*, New York, USA.

SCHACH, W., Automation – Utopia for the circular knitting machine or a reality soon? *Knit. Tech.*, (2000), 2, 14–17.

STEVENS, J., Fundamentals of single jersey knitting, *Knit. Times*, (1976), 29 March, 31–9.

STOVHASE, R., The circular knitting machine – a 'high tech product'?, *Knit. Tech.*, (1998), 2, 58, 59.

WEBER, K. P., Theory of knitting (Part 3), *Knit. Times Yr. Bk.*, (1975), 58–89.

US PATENT 4 532 781, Memminger and Buck.

Skechers EX1050
Skechers v Nike

14

Speciality fabrics and machines

14.1 The range of speciality fabrics

Speciality fabrics include fleecy, plush, high pile and wrap fabrics. Although some constructions are unique to a single type of circular machine, others may be knitted on a range of machinery.

The surface effects of fleecy, plush or pile are developed during the finishing process usually on the technical back of single faced fabric.

In *fleecy fabrics*, the fleece yarn fibres (usually in the form of inlaid yarn) become entangled and indistinguishable from the base yarn on the effect side, despite having been separately supplied during knitting.

In *pile* and *plush* structures the pile and plush is clearly distinguishable from the base. Pile is considered to stand out at right-angles to the base, whereas plush lies at less of an angle from the base surface. High-quality three-thread *invisible fleecy* and *sinker loop terry* (*plush plating*) are still produced on a rapidly declining number of old loopwheel and sinkerwheel frames respectively [1], but they are facing intense competition from modern, high-speed, more productive, single-jersey, latch needle machines.

Invisible fleecy (Fig. 14.1) is a plain plated structure composed of a face and binding yarn with a fleecy backing yarn tucked into the technical back at every fourth wale to mesh only with the binding yarn. The face yarn prevents the arms of the fleecy tucks being visible between the wales on the face, which would spoil its clean appearance. The fleecy inlay is spread across the technical back by centring the fleecy tucks of the next three-feed sequence on the middle of the three needles that missed the fleecy yarn in the previous sequence.

A popular gauge for sweat shirts and track suits is E 20, using 1/28's to 1/30's (NeB) cotton or acrylic yarn or 1/70's (Td) nylon and 1/9's to 1/12's (NeB) cotton or acrylic fleece yarn. A 30-inch diameter machine will give a finished width of 54–60 inches (1.37 m–1.52 m). The loosely-twisted fibres of the fleece yarn respond easily to napping during finishing.

The standard sweatshirt weight is 250 to 300 g/m^2.

Skechers EX1050
Skechers v Nike

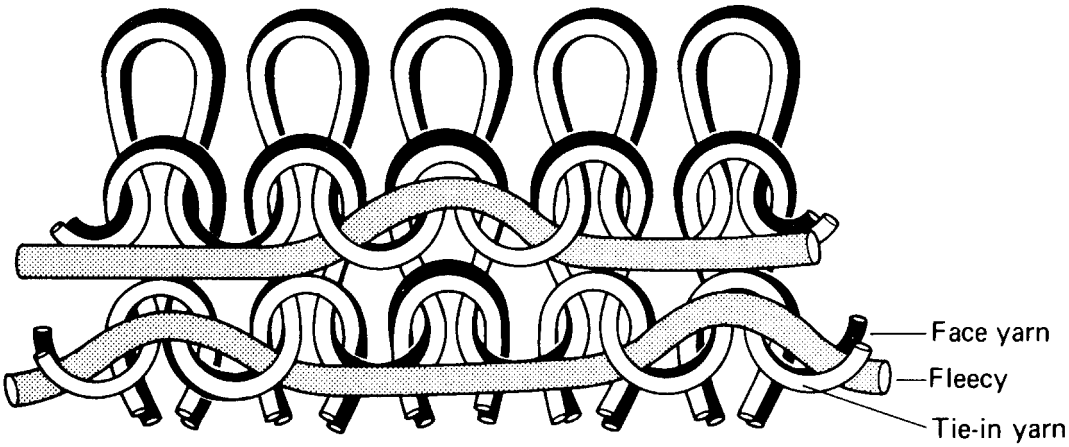

Fig. 14.1 Three-thread fleecy loop structure.

14.2 The production of fleecy on sinker-top machines

Three-thread fleecy was at first knitted as a quality fabric on the (no longer viable) loopwheel frame. (The loopwheel frame was described in detail in the first and second editions of this book, Sections 14.1 and 14.2). Three-thread fleecy is now produced mainly on single-jersey latch needle machines in the manner first patented by *Lestor Mishcon* in the USA in 1937. Pattern wheel selection was used for fleece yarn tucking. The preferred method today is to use a top needle butt and cam-track for knitting the ground (face) and tie-in (binding) yarns, and four tracks and corresponding butt positions (which can be rearranged) for the fleecy tucking sequence.

Figure 14.2 shows a typical knitting sequence for producing three-thread fleecy:

1 Selected needles are raised to tuck height to receive the fleecy yarn (F) (usually one out of four). The sinkers then move forward so that the top throat controls the fleecy tuck (F) whilst the lower throat controls the previous course.
2 All needles are raised to clear the previous course and receive the tie-in yarn (T).
3 The needles descend to the normal 'tucking-on-the-latch' position so that the previous course remains on the outside of the closed latch. The fleecy tuck, which is higher on the closed latch, slips off the needle head. As the fleecy tuck rests on the upper sinker belly, with the sinker withdrawing, the tie-in yarn (inside the closed hook) is drawn downwards through it.
4 The upper sinker throat holds the tie-in loop on the open latch whilst all needles rise to receive the ground yarn (G).
5 The needles again descend to the 'tucking-on-the-latch' position, to form loops from the tie-in yarn over the sinker crowns.
6 The sinkers finally withdraw and, as the needles descend, the new plated course slips onto their lower sinker bellies and the old course is knocked-over. Very carefully adjusted cam settings encourage the ground yarn to plate on the technical face (the underside) of the structure.

Skechers EX1050
Skechers v Nike

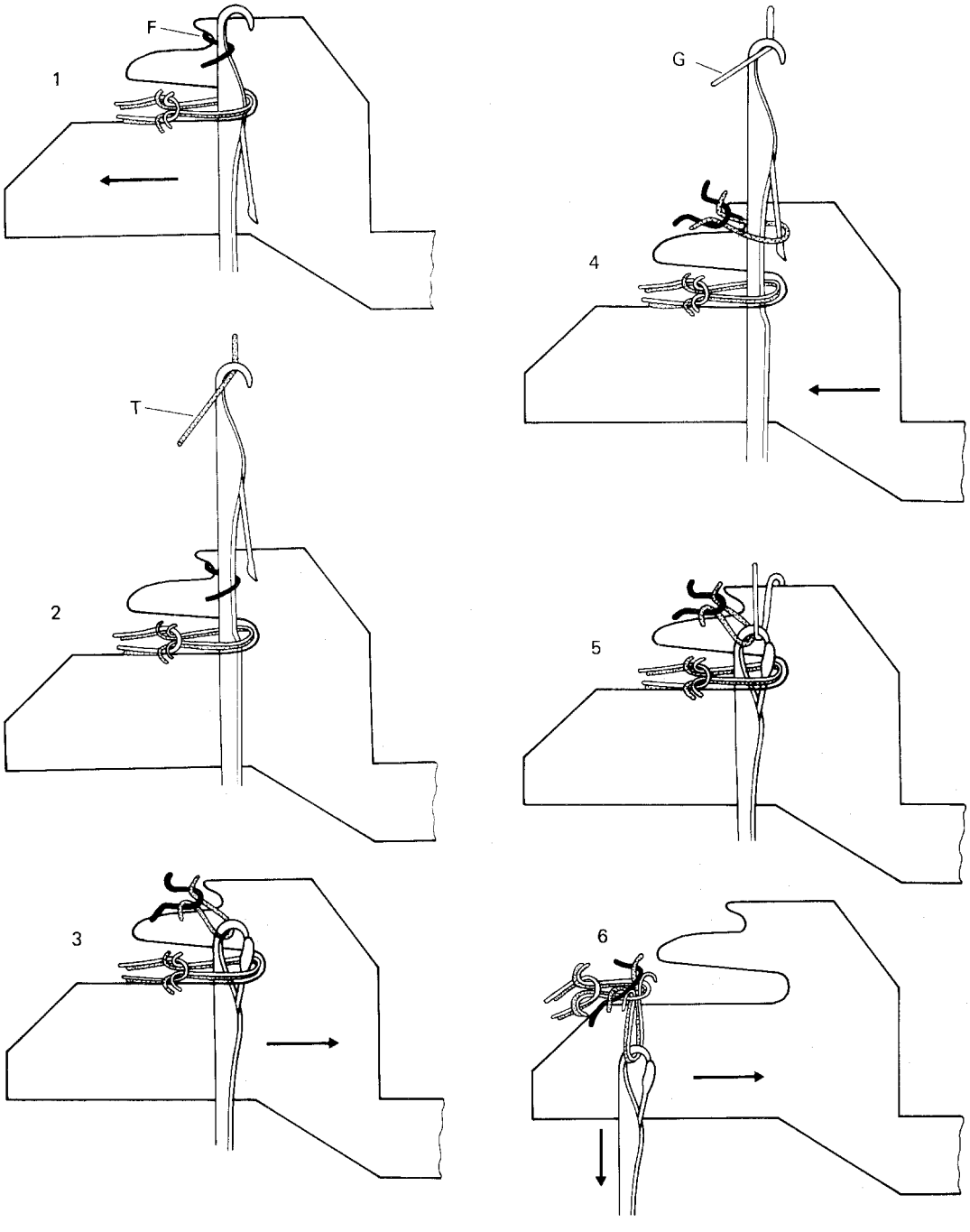

Fig. 14.2 Three-thread fleecy knitting cycle.

Skechers EX1050
Skechers v Nike

14.3 Fleecy interlock

Fleecy interlock is a plated fleecy fabric consisting of a main yarn, which is fed to knit on both needle beds and a fleecy yarn, which is fed first, and at a lower level, below the latches of the dial needles whilst they are at clearing height. It does not enter their hooks or show on the dial side of the fabric (Fig. 14.3).

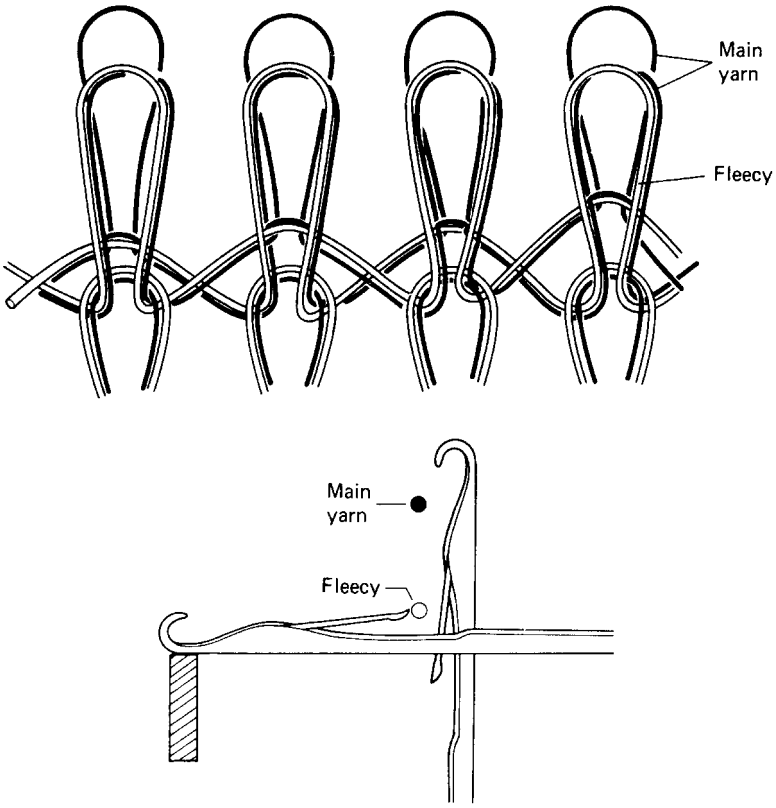

Fig. 14.3 Fleecy interlock.

14.4 Plush

Single-sided plated plush or *terry* is a popular leisurewear and sportswear structure that has the form-fitting properties of single jersey and is used in both fabric and sock form. The elongated plush sinker loops are formed over a higher knock-over surface than the normal-length ground sinker loops with which they are plated (Fig. 14.4). The plush sinker loops show as a pile between the wales on the technical back of the fabric.

Henkel plush or *velour* is achieved during finishing, by cropping or shearing the plush sinker loops in both directions. This leaves the individual fibres exposed as a soft velvety surface whilst the ground loops remain intact. It requires a fine gauge structure and involves a considerable loss of cropped fibre.

Skechers EX1050
Skechers v Nike

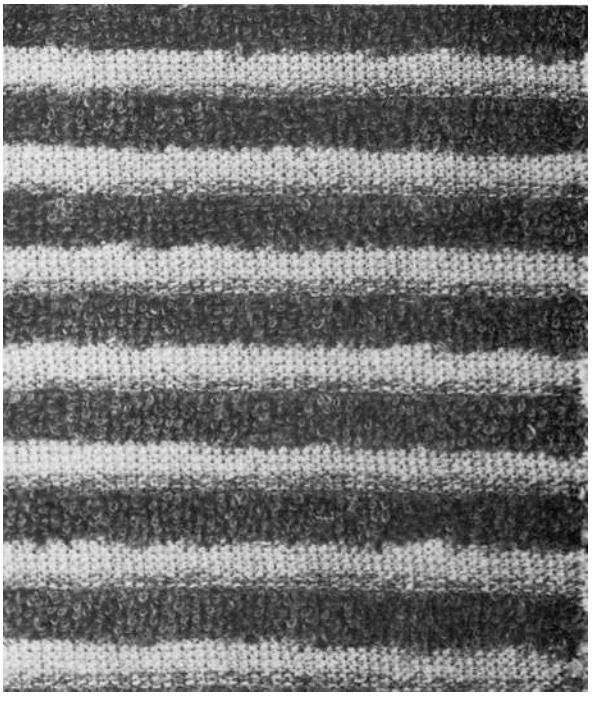

Fig. 14.4 Horizontal ribs with an ottoman effect on two-tone towelling [Alwin Wild, Switzerland].

14.5 The bearded needle sinkerwheel machine

In the past, this machine was renowned for the production of high-quality plush fabric but its productivity was low, with a speed factor of 500 and only 4 to 12 feeds in a diameter range of 10–44 inches. With the demand for increased production, knitters turned to the more productive latch needle sinker top machines, which were progressively refined to meet the needs for high-quality plush.

(The sinkerwheel machine was described in detail in the first and second editions of this book, Sections 14.6 and 14.7.)

14.6 Sinker plush knitted on single-jersey latch needle machines

On the sinker top latch needle machine, the ground yarn is fed into the sinker throat and the sinker is then advanced so that the plush yarn fed at a higher level (Fig. 14.5) is drawn over the sinker nib. If the sinker is not advanced, the two sinker loops will be of equal size as they will both be drawn over the same knock-over surface.

The numerals 1–6 illustrate the production of one course of standard plush:

1 The ground yarn is fed onto the open latch and into the throat of the sinker which is fully withdrawn.
2 As the needle descends the stitch cam, the plush yarn is fed into its open hook. The sinker advances and its nib re-engages the plush loop of the previous course so that it stands up as a pile loop whilst the new plush loop is drawn over the

Skechers EX1050
Skechers v Nike

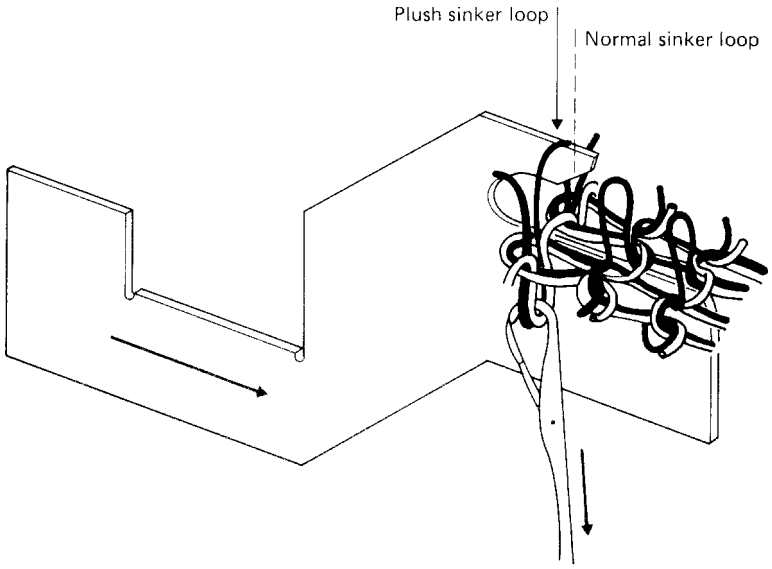

Fig. 14.5 Action of the plush sinker.

top of the nib. The back of the throat of the advancing sinker engages with the ground yarn loop, holding it against the inside of the needle hook in a lower position than the plush loop.

3 The sinker is advanced fully forward to retain the plating relationship and tighten the plush loop on the sinker step whilst the needle descends to knock-over.
4 The loops are relaxed as the needle rises to clear.
5 The new plush loop is retained on the sinker step as the needle rises.
6 When the needle is at maximum clearing height, the sinker advances to retighten the plush loop.

Mechanical or electronic selection may operate onto the backs of sinkers and thus produce designs in plain and plush stitches. A range of plush heights from 2 to 4 mm is possible, using different heights of sinkers. Precise camming of needles and sinkers, sharper angles of stitch cams, and control of loops (such as by sinker nib penetration methods after formation) are all being employed to improve accuracy of plating and reduce plush loop robbing.

On a 20 npi machine 1/30's (NeB) cotton might be used for the plush with a ground of 2/70's (Td) S- and Z-twist nylon alternating at each feeder in a weight of approximately 285 g/m, whereas for 24 npi the more expensive 1/30's cotton and 100 denier nylon is required. The speed factor is about 500–600, with between 1.3 and a maximum of 2 feeders per diametral inch.

Polar fleece is not a fleece fabric, it is actually a reverse plated plush fabric. The micro fibre plush yarn face loop is pushed towards the back of the needle hook, causing the two yarns to change positions so that the plush yarn is below the ground yarn loop. It therefore plates on top on the technical face, in addition to being on top on the sinker loop side of the technical back. Both sides of the fabric are lightly raised during finishing.

Skechers EX1050
Skechers v Nike

14.7 Full-density patterned plush

The durability of plush fabrics is strongly influenced by the density of the pile. In plain, single-colour pile there is an optimum pile density of one pile loop to each ground loop.

When knitting patterned plush (either in colour or self-colour with different plush heights), optimum pile density cannot be achieved. The reason is that, although the plush yarn plates with a complete ground course on the technical face side, it only produces a part course in pile on the effect side.

Mayer and Cie have developed the model MCPE to knit high-density jacquard plush fabrics, using electronic selection. Two independently-controlled sinkers operate in each trick to separately form the ground yarn and the pile yarns into loops. All the loops are then knocked-over together. On the technical face side, the ground yarn is required to perfectly plate over the pile yarn. One of the sinkers holds down the fabric and the pre-formed ground yarn loop; the other knocks-over and holds-down the pile loops.

At preliminary loop forming, all needles are taken down to 'tucking-on-the-latch' height so the old loops remain on the closed latches. For two-colour plush, at pile feeder for colour A, selected needles rise to receive pile yarn A. At pile feeder for colour B, the remaining needles are selected to receive pile yarn B. At knock over, all the ground and pile loops are knocked over together.

When a needle is not selected to knit the pile yarn, it floats on the pile surface and is clipped out in finishing. It is only knitted into the ground when selected, so there is less wasted yarn.

The 30-inch diameter machine has 48 cam segments. In three-colour plush there will be 12 knock-over/ground segments and 36 pile loop segments, in a sequence of 1:3.

14.8 Cut loop

Pai Lung have developed a cut loop cylinder and dial jacquard terry machine. The dial needles knit single jersey. The cylinder contains the pile elements, which are actuated by electronic selectors. The cutting elements are in a separate sinker ring and co-operate with the cutting edges of the pile elements in a shearing action.

14.9 Double-sided plush

Double-sided plush can be obtained using a machine with two sinkers per needle, the face plush yarn being drawn by the throat of a second, specially-shaped sinker placed alongside the plush sinker in each dial trick.

Babygro, a special two-way stretch babywear fabric, has been knitted on loop-wheel frames using bearded needles. The plated cotton yarn is pressed-off odd needles at odd feeds and even needles at even feeds to obtain float pile loops.

A wide range of plush fabrics in single-jersey construction can also be knitted on modified rib machines by drawing loops with the second set of needles and then pressing them off to form the plush loops. Sometimes plush points are employed.

Uneconomic rates of production make these techniques non-viable.

Skechers EX1050
Skechers v Nike

14.10 Sliver or high-pile knitting

Sliver or *high-pile knitting* is single-jersey made on a circular machine having sliver feeds where the stock- or dope-dyed slivers are drawn from cans at ground level. They are then prepared by mini three-roller drafting card units followed by two wire-covered rollers that draw and transfer the thin film of fibres to the needles (Fig. 14.6). At each sliver feed, the needles are lifted to an extra high level where they rise through the wires of the doffer roller to collect a tuft of staple fibres in their hooks.

Air-jet nozzles over the knitting points ensure that the tufts are retained in the needle hooks and that the free fibre ends are orientated through to the inside of the fabric tube (the technical back), which is the pile side.

As the needles start to descend, the ground yarn is fed to them, so that each has a ground loop and a tuft of fibres that are drawn through the previous loop. A range of facilities are available from different machines including up to 16 roller speed settings, the use of two different fibre lengths, and mechanical or electronic needle selection and sliver selection. Electronic selection can select needles to take fibres from one of four different coloured slivers.

Borg Textiles pioneered specialised sliver knitting in the 1950s in co-operation with *Wildman Jacquard* although *J. C. Tauber* obtained US patents as early as 1914. A typical machine now has a diameter of 24 inches in a gauge of 10 npi and runs at 45 rpm with 12–18 sliver feeds.

The fabric finishes 54–58 inches wide (137–147 cm) in a weight of about 450 g/m when knitting 360 denier fibrillated polypropylene ground yarn and a modacrylic sliver having a 3 denier $1\frac{1}{2}$ inch staple.

Fibre staple lengths can range from 20 to 120 mm, in sliver weights from 8 to 25 g/m^2, giving greige (unfinished) weights of 200–2000 g/m^2, for end-uses such as fun furs, linings, gloves, cushions, industrial polishers and paint rollers.

A typical high-pile finishing route is: rough shearing, heat setting and back-coating, pile cropping, electrifying or polishing (to develop the lustre and remove

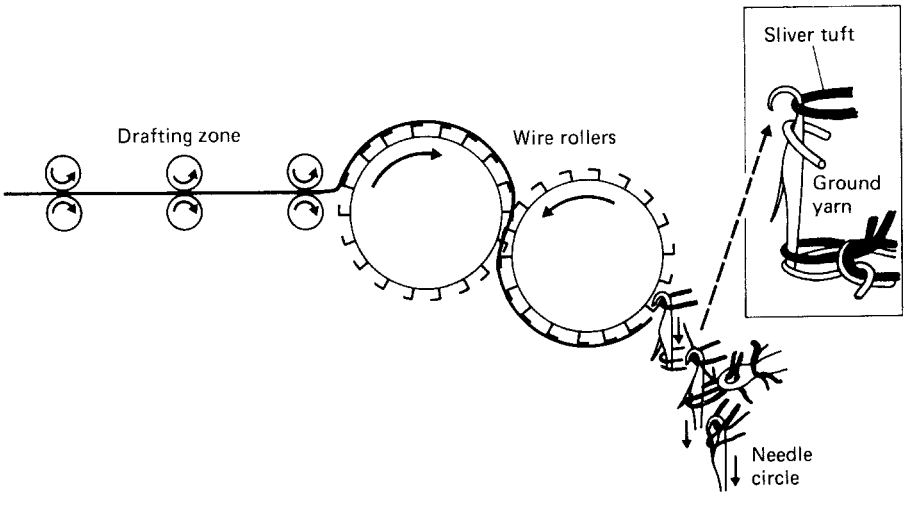

Fig. 14.6 Sliver high pile machine.

Skechers EX1050
Skechers v Nike

crimp from the fibre ends), tiger framing (to distribute the pile effect), and controlled torque winding (to further develop the pile uniformity).

14.11 Wrap patterning

Wrap patterning was popular in single jersey, especially in underwear, for producing vertical stripe effects, often in conjunction with horizontal patterning (Fig. 14.7). The fingers or wrapping jacks, with their warp yarn pins, must rotate in unison with the cylinder in order for each to remain with its section of needles.

Solid-colour warp insertion can be achieved with the *Camber* wrapping method, which may be used on any of their needle selection machines. The first selection system of the sequence selects needles to receive the wrap yarn, and the second selects the remaining needles to receive the weft ground yarn. According to machine model, diameter, and gauge (E 5–32), up to 100 or more fingers will successively pass through each section and be capable of wrapping across up to eight or more selected adjacent needles.

As each finger in turn contacts a stationary cam at the wrapping section, it pivots out of the cylinder and rises up its clockwise moving post, wrapping its warp yarn into the passing hooks of those needles selected to rise to take it. It is then cammed to return to its inactive position inside the cylinder whilst the needles pass to the next system, where those previously unselected rise to take the ground yarn. On a 28-gauge machine, 70–200 denier yarn might be used for the warp and 1/30–1/50 (NeB) for the ground.

On the *Mayer Vilonit* machine, wrapping and striping are incorporated into fabrics in the form of tuck-miss inlay patterns, thus providing an opportunity to use a wide range of yarn counts. A 26-inch diameter machine has twenty-four feeders, six with four-colour striping and six using the 46 wrapping fingers. Needle selection is by punched-tape controlled peg drums. Cam sections are in sequences of eight. At feeders 1 and 5, needles are selected to tuck the striping yarn, at 3 and 7 they

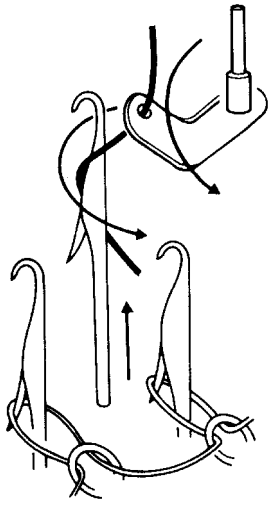

Fig. 14.7 Wrap patterning.

Skechers EX1050
Skechers v Nike

are selected to tuck the wrap yarns, whilst at feeds 2, 4, 6 and 8 needles are selected to knit the ground yarn.

Wrap patterning produces small, vertically-arranged designs without restrictive horizontal floating threads, but it requires a more expensive machine, it is time-consuming to set-up patterns, and productivity in numbers of feeds and speed of production is slow.

Reference

1. SPENCER, D., *Knitting technology*, first and second editions, (1983 & 1989) Pergamon Press, Oxford, UK.

Further information

ANON., Monarch plush *Knit. Int.*, (1996), Sept., 25.
KLINGER, D., What is meant by reverse plating, *Knit. Tech.*, (1989), No 6, 452–455.
QUAY, E., Sliver knitting, *Knit. Int.*, (1996), Oct., 24–25.
SCHÄCH, W., What is meant by cut plush. *Knit. Tech.*, (1989), No 6, 456, 457.

Skechers EX1050
Skechers v Nike

15

Loop transfer stitches

Weft knitting offers considerable scope for the transfer of a full or part needle loop or sinker loop onto an adjacent needle, either in the same bed or in an opposing bed.

15.1 Uses of loop transfer

The object of loop transfer is to achieve shaping, produce a design, or change the stitch structure. In addition, loop transfer is used

- in ladies' stockings, when producing the double-thickness, plain fabric, in-turned welt,
- in running-on and doubling rib loop fabric onto the needles of a straight bar frame to form the rib border of a garment part, and
- when running the loops of two separate fabrics onto the points of a linking machine for linking these fabrics together.

Loop transfer by hand-controlled points is a tedious and skilled operation, but automatic loop transfer requires a specific arrangement of specially shaped needles and/or transfer points.

15.2 The four main types of transfer stitches

There are four main types of transfer stitches;

1 *Plain needle loop transfer stitches*, produced by transference of a loop from one needle to another in the same bed.
2 *Fancy lacing stitches*, produced by modification of the plain loop stitch.
3 *Rib loop transfer stitches*, produced by transferring a loop from one needle bed to the other.
4 *Sinker loop transfer stitches*

Skechers EX1050
Skechers v Nike

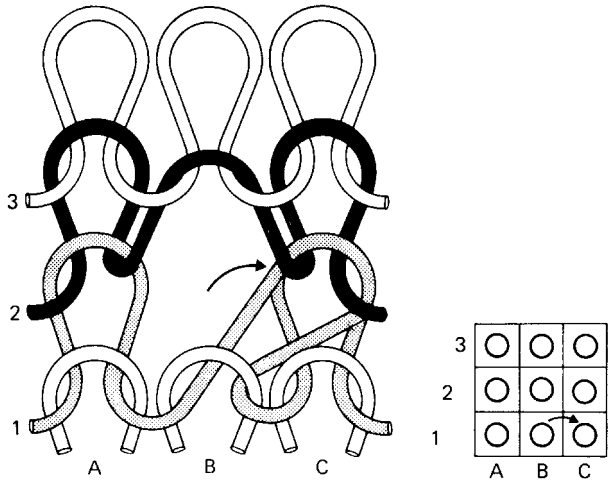

Fig. 15.1 Plain loop transfer stitch.

15.2.1 Plain loop transfer stitches

Needle loop transfer on plain fabric is most commonly achieved on straight bar frames using specially-shaped, rackably-controlled transfer points (Fig. 15.1).

In designs it is termed a *lace stitch* [1] whereas in selvedge shaping it is termed *fashioning*. When crossing over transfer stitches or narrowing, it is possible to transfer a loop to the next-but-one adjacent needle.

When the needle loses its loop and is required to knit at the next cycle, it will form a loop configuration having the appearance of a tuck loop which, when widening, may require *filling-in* (split stitch, Chapter 19). Two-needle widening is not practical because an insecure stitch is produced by two adjacent empty needles re-starting knitting at the same time.

Loop transfer to adjacent plain wales in rib structures has seldom been achieved automatically by means of transfer points and, even then, it has tended to be restricted to the narrowing of collars and sleeves. The method can be mechanically complex and slow. Only a few straight-bar rib frames were ever built. Although there are some electronic V-bed flat machines that have beds of loop transfer points, most use rib loop transfer needles and needle bed racking to achieve that purpose.

15.2.2 Fancy lacing stitches

The bearded needle sinkerwheel machine produced the largest range of fancy lacing stitches [2]. Some are unique to it and have the term '*à jour*' in their description, which implies a sequence of samples. *À jour C* or *knupf* (Fig. 15.2) – also termed *filet lace*, *weft knitted net* and *knotted stitch* – has square apertures in an all-over effect that is popular for men's athletic underwear. On an E 16 fine gauge machine, 1/18's cotton or 2/70 denier nylon might be used. A course of long loops is knitted and the two side limbs of every second needle loop 'B' are spread sideways onto the needle loops 'A'. The second is knitted with a short stitch length and tucking occurs on needles 'B' to make the aperture wider.

Another stitch, known as *à jour B*, has a twisted transferred loop, produced by

Skechers EX1050
Skechers v Nike

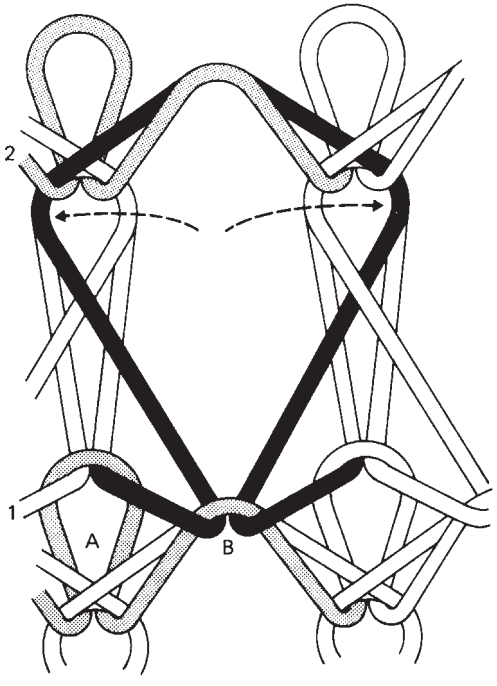

Fig. 15.2 À jour knupf.

deflecting the beard of the receiving needle across into the eye of the delivering needle so that, as the loop is pressed-off from the delivering needle, it twists over. The effect is achieved by using toothed lacing wheels with the upper wheel's teeth coupling two beards together; these teeth are arranged according to pattern requirements.

À jour H is loop displacement without transference, and is produced by deflecting alternate needles (receiving needles) underneath and past the loops on the delivering needles so that, when the receiving needles spring back into position, they draw the limbs of the adjacent needle loops sideways over their heads.

15.2.3 Rib loop transfer stitches

Figure 15.3 illustrates an example of a rib loop transfer stitch. At the first course, needles are knitting only in one bed. At the second course, an empty needle in the opposite bed commences knitting, producing 1×1 rib, and at the third course, this needle transfers its loop to a needle knitting in the opposite bed.

The rib loop transfer stitch is a very popular stitch. Modern automatic V-bed flat machines have special loop transfer needles, and individual needle selection and camming facilities for rib loop transfer from either bed, in addition to selection facilities for knit, tuck and miss. The RTR type circular garment-length knitting machine has a similar arrangement at transfer cam sections in the cylinder.

On some underwear models there is also collective dial-to-cylinder rib loop transfer for changing from 1×1 rib to 2×2 rib needle set-out at the transition from the welt and border to the body section of the garment. (Knitwear models tend to use

Skechers EX1050
Skechers v Nike

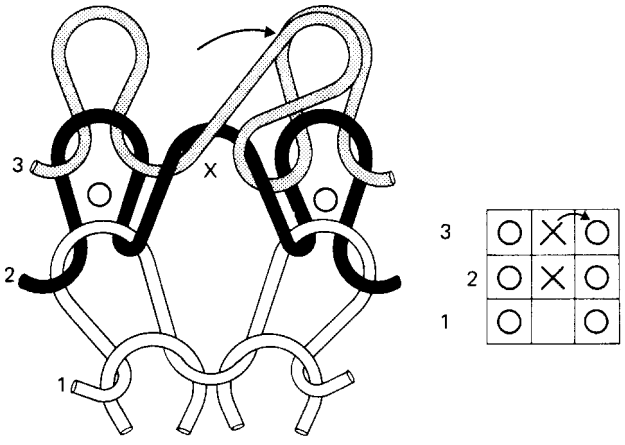

Fig. 15.3 Knitting on empty rib needle followed by rib loop transfer.

press-off cam facilities acting onto the back butt of every third dial needle prior to the start of a garment).

Whereas the RTR type of machine produces designs involving selective transfer of cylinder loops onto dial needles that already have a loop of their own, V-bed flat machines can select needles to transfer their loops onto empty needles in the opposite bed to knit links-links designs, cables and cross-over stitches and selvedge edge shaping.

15.2.3.1 The requirements for rib loop transfer

The basic requirements for rib loop transfer on any rib machine are:

1 Specially-designed latch needles with a ledge for lifting the delivering loop and either a recess or a spring clip on the side of its stem to assist entry of the receiving needle hook into the spread loop.
2 A delivering needle cam that lifts the needle higher than normal clearing-height, lifting and spreading its loop so that the hook of the receiving needle can enter it as its cam lifts it to approximately tuck height. Normal needle selection arrangements can thus be employed to select those needles required to be lifted by the delivering needle transfer cam.
3 A needle bed rack of between 1/3 and 1/2 of a needle space so that the stems of the delivering and receiving needles are very close during the loop transfer action.

Figure 15.4 illustrates the transfer action, together with its associated cam system. There is a receiving cam (R) and a delivering cam (D) in each needle cam system at the end of each system, thus providing the possibility of two-way loop transfer in the leading system in each direction of carriage traverse.

The delivering needle cam has a double peak; the first peak lifts the loop to stretch and open it ready for transfer on the second peak. The receiving needle cam in the opposite bed is aligned with it and the under edge of, the delivering cam in its system acts as a guard cam for the receiving needle butts.

In Fig. 15.4a, the delivering needle (b) is moving towards transfer height, with the receiving needle (a) about to enter the recess on its underside. At this point

Skechers EX1050
Skechers v Nike

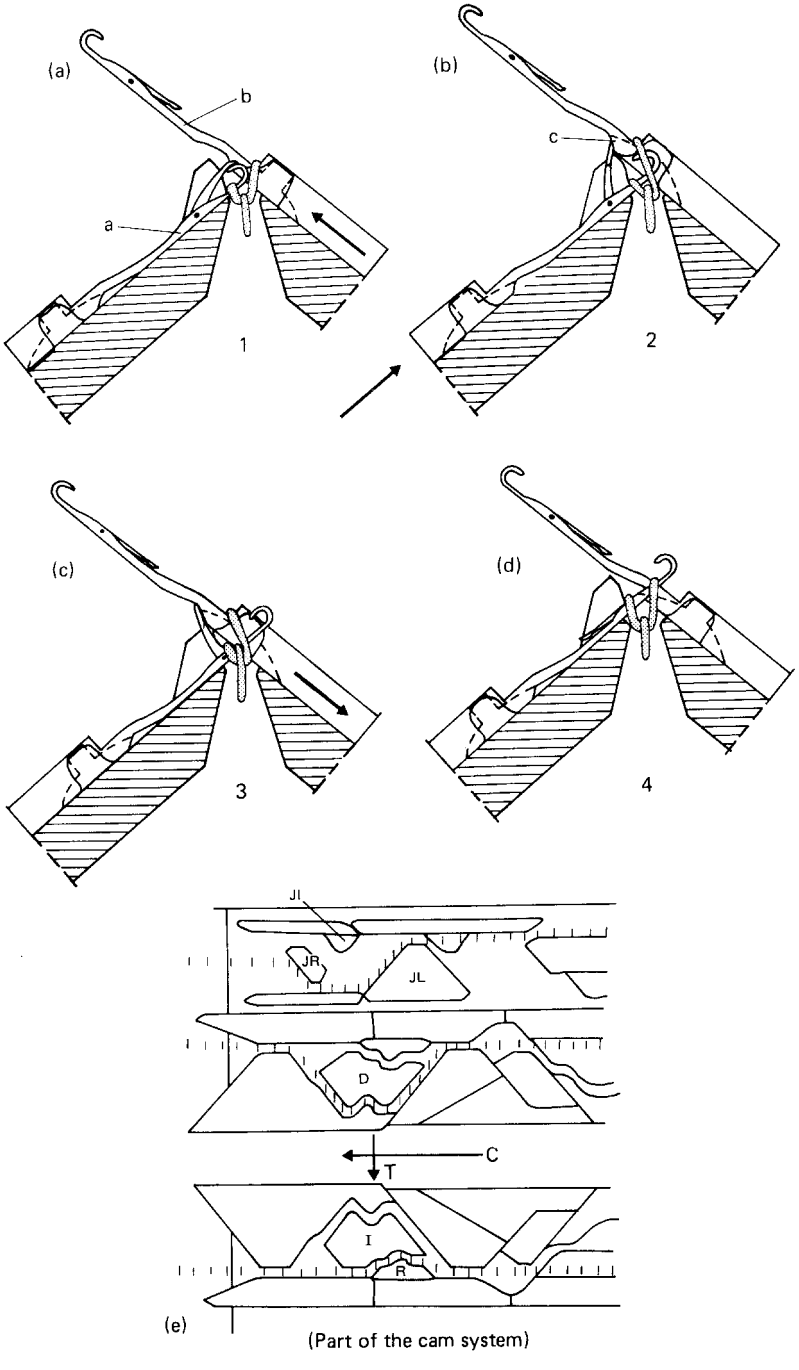

Fig. 15.4 Rib loop transfer on a modern V-bed machine.

Skechers EX1050
Skechers v Nike

(Fig. 15.4b), a stop ledge (c) on the rising delivering needle (b) contacts and opens the latch of needle (a) (this arrangement is necessary for opening the latches of empty receiving needles).

In Fig. 15.4c, needle (b) is cammed to full transfer height, lifting the loop to be transferred, and needle (a) is cammed into it with its hook open.

In Fig. 15.4d, transference is completed by lowering needle (b) so that its loop is knocked-over and fully transferred into the hook of needle (a). Single-bed knitting is possible whilst the beds are racked for transfer.

15.2.3.2 Rib loop transfer on a circular garment-length RTR-type machine

For rib loop transfer, the dial is shogged so that the cylinder needle is closer to the dial needle on its right. As the cylinder needle is raised, a gear-type deflecting mechanism, rotating with the cam-box, deflects the needle to the right so that the dial needle can now enter its recess on the left side and penetrate the lifted cylinder loop. The cylinder needle now descends, casting-off its loop into the hook of the dial needle and returning to its undeflected position. At the next knitting section, the empty needle may be selected to miss or to receive the new yarn.

Collective dial-to-cylinder rib loop transfer usually occurs on every third cylinder needle when changing from 1×1 to 2×2 rib in the knitting of stitch-shaped vests. Dial needles with back butts are cammed out so that the ledges on their stems align their loops with the cylinder needle hooks. An angular cam face deflects the dial needle against the direction of knitting so that the cylinder needle normally on its right enters its expanded loop on the left, aided by the recess in the back of the dial needle and a part shog of the dial. The dial needles then withdraw, transferring their loops and not taking part in knitting again until 1×1 rib is required.

15.2.4 Sinker loop transfer stitches

Pelerine eyelet is a cellular structure whose elliptical apertures are formed at courses where adjacent plain wales move outwards as a result of the absence of connecting sinker loops. Specially shaped pelerine points consisting of two shaped members occupying a single trick are employed to gather the sinker loops, usually at two successive courses, transferring them back at the next knitting cycle to the hooks of the two needles between which they were originally formed.

Pelerine eyelet is produced in the form of continuous fabric on circular plain web eyelet machines where it is used for lightweight underwear, as rib eyelet in one set of the 2×2 rib wales of ladies' body-length stitch-shaped underwear, and as eyelet designs in some types of socks.

Although the diameters of web eyelet machines range from 9 to 22 inches (23–56 cm), 16 inch (40 cm) tends to be popular, in a common gauge of E 16 using cotton counts between NeB 2/28's and 2/35's. The points are normally set-out in the cylinder for convenience of selection and re-arrangement, and the plain knit base structure is produced by a full set of needles in the dial.

Figure 15.5 illustrates standard all-over plain web eyelet, having a repeat area of three wales by four courses. After every three needles A,B,C, in the dial, a pair of points is placed in the trick of the cylinder. Courses 1 and 2 are knitted as plain fabric, with the points merely rising to act as holding down sinkers when the dial needles move out to clear. Before the start of the third course, a cam lifts a butt of the points, causing their head to protrude between the head of the two dial needles

Skechers EX1050
Skechers v Nike

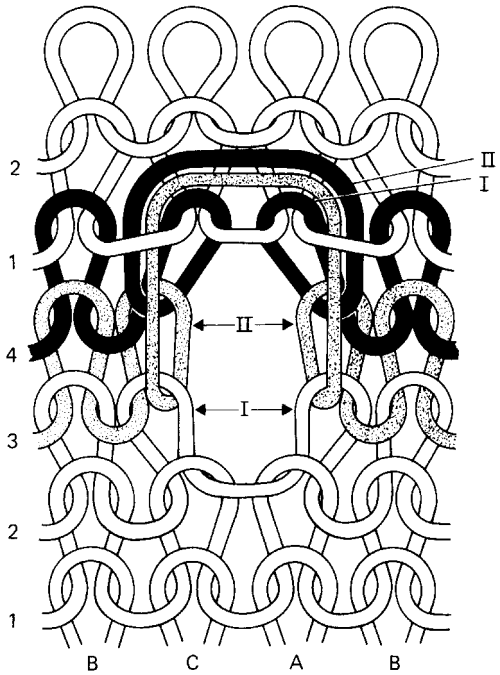

Fig. 15.5 Pelerine stitch.

in the gather position. Thus, as the needles knit courses 3 and 4, extended sinker loops are drawn around the raised head of the points. The butt of the points now enters the transfer section and the points are cammed to a higher level so that the ledges on either side lift the gathered sinker loops that are spread by the wider eye-shape of the head.

The needles are then cammed outwards by a tuck cam so that the two adjacent needles enter the eye of the points (Fig. 15.6a) just beneath the gathered sinker loops. The points now descend and the two members spring apart (Fig. 15.6b) as they pass the outward dial needles, fully transferring the gathered sinker loops into the hooks of the two needles.

Diagonal eyelet has alternately staggered eyelet holes produced by odd pairs of pelerine points operating through their long top butt at the first four-feed cycle, and even pairs of pelerine points operating at the second four-feed cycle by means of their long bottom butt, and so on, with each butt position having its own cam-track.

Patterned eyelet can be produced by using a pattern wheel to select points for collection at every third feeder (the friction of the sinker loop holds the points in action at the fourth feeder). Dummy points engage the wheel from the other cylinder tricks and, as only every third pattern wheel trick is in use, three different pattern selections may be loaded. Designs may either be in the form of eyelet motifs on a plain ground or plain motifs on an eyelet ground.

Some of the newer eyelet structures employ two needles to a pair of points. *Fine eyelet* has a four-feed repeat sequence, *close eyelet* has a two-feed collect and transfer sequence using odd points at the first sequence and even points at the next, whilst *pin point* is a patterned eyelet having two plain courses and selection for a single collect and transfer course.

Skechers EX1050
Skechers v Nike

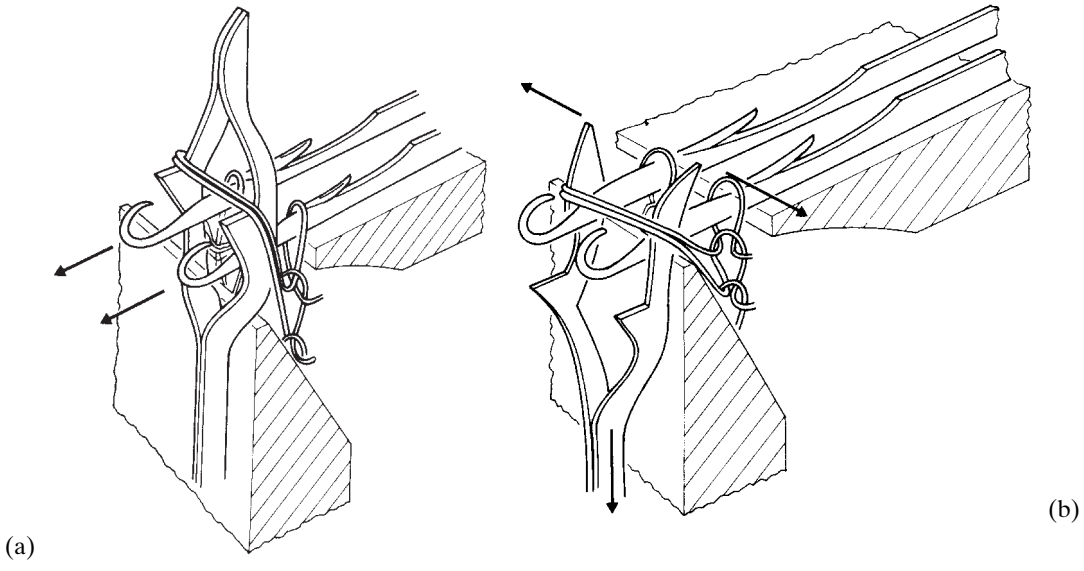

Fig. 15.6 Pelerine transfer action.

For standard eyelet, a 16-inch diameter machine might have twenty feeds and five transfer stations, and for close eyelet sixteen feeds and eight transfer stations.

Occasionally, points with one straight member and one curved member have been employed to produce half sinker loop transfer stitches.

References

1. LANCASHIRE, J. B., Patterning with points in full fashioned knitting, *Hos. Trade J.*, (1959), May, 90–100.
2. ANON., Filet lace sinker wheel machines, *Hos. Trade J.*, (1962), Oct., 102–5.

Further information

ANON., Knitted fabrics for modern underwear, *Hos. Trade J.*, (1963), Jan., 78.
ANON., Web eyelet fabrics, *Hos. Trade J.*, (1961), Aug., 108–9.
LANCASHIRE, J. B., Stitch transfer fabrics, *Hos. Trade J.*, (1968), April, 62–6.
REICHMAN, C., Fundamentals of loop transfer, *Knit. O'wr Times Yr. Bk.*, (1966), 77, 81, 371.

Skechers EX1050
Skechers v Nike

16

Welts, garment sequences and knitting to shape

As previously mentioned (Section 8.2), the production of a firm starting welt and the introduction of shape during knitting are often features of garment-length knitting sequences.

16.1 The welt

A *welt* is an attractive and secure edge of a knitted article that helps to prevent laddering or unroving of a structure. It is formed either during the knitting sequence (usually at the start, and parallel to the courses), or as a later seaming operation during making-up.

16.1.1 The plain fabric welt

On machines with no facilities for rib welt sequences, the plain fabric is formed into either a turned-over *inturned-welt* or a *mock rib welt*. The ability to produce a knitted welt sequence usually distinguishes an article-producing machine from a fabric-producing machine. Some machines start at the closed toe end or finger-tip and finish with the welt end of the article. The last knitted course will unrove backwards from the last knitted loop unless it is secured.

Sometimes the curling edge of plain fabric is used as the start of a garment or the curl of a collar instead of a welt.

16.1.2 The inturned welt

The *inturned welt* is used particularly for manufacturing ladies' hose and sports socks on circular machines (Fig. 16.1) and some knitwear on Cottons Patent machines (Fig. 16.2). Jacks or hooks collect the sinker loops of the third course or the set-up course and hold them, drawing the fabric away until sufficient has been knitted for the double-thickness welt.

Skechers EX1050
Skechers v Nike

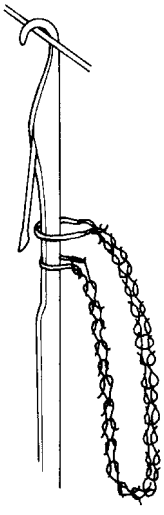

Fig. 16.1 Turned welt on latch needle machine.

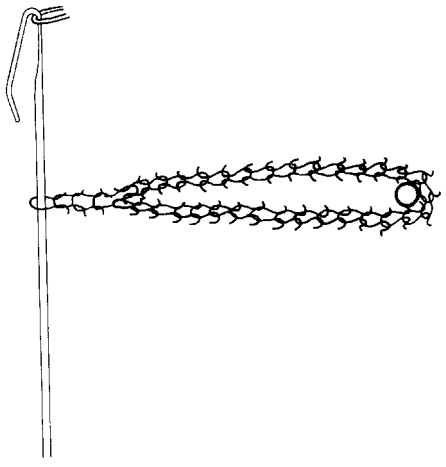

Fig. 16.2 Turned welt on bearded needle machine.

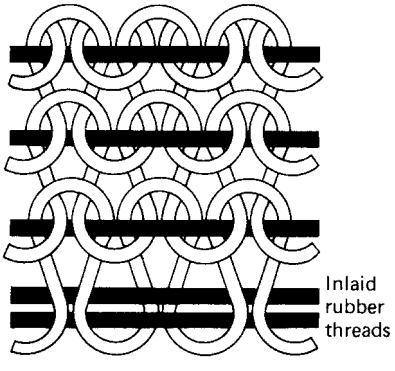

Fig. 16.3 Accordion welt top.

The welt is then turned by transferring the held course back onto the needles that knit it into the structure. A *picot edge* at the turn of the welt is achieved either by an alternate needle tuck sequence or by alternate needle loop transfer.

Cottons Patent plain machines often produce garment panels by knitting onto a rib border that has been run onto the needles, having been previously knitted on a V-bed rib machine.

16.1.3 Accordion top

An *accordion top* (Fig. 16.3), welt and mock rib, can be produced on single-cylinder half-hose and sock machines, and on other machines using a single set of needles in a tubular arrangement. Elastomeric yarn is laid-in to odd needles only for a few courses so that when the first plain course is knitted by the textile yarn, the straight contracted elastomeric yarn lies through its sinker loops, forming a neat roll edge. The elastomeric yarn is then usually inlaid on a two-tuck two-miss or a one-and-one basis at each course or alternate courses for a number of courses. As the elas-

Skechers EX1050
Skechers v Nike

tomeric yarn relaxes, it causes alternate wales to be displaced into a mock rib configuration. Sometimes, the second course of textile yarn is knitted only on alternate needles.

16.2 Rib welts

Most fully-fashioned and stitch-shaped underwear and outerwear garments, half-hose, and socks have ribbed borders containing a welt sequence that is produced by causing the sets of needles to act independently of each other after the 1×1 rib set-up course.

When the rib border is to be knitted in 2×2 rib, the needle bed is either shogged to form a skeleton 1×1 rib needle arrangement or it is knitted on a normal 1×1 rib needle set-out followed by rib loop transfer to achieve 2×2 rib for the border.

Three types of welt are possible when needles are arranged in 1×1 rib set-out. These are:

1 The tubular or French welt.
2 The roll or English welt.
3 The racked welt.

16.2.1 The tubular welt

The *tubular welt* (Fig. 16.4) is the most popular welt because it is a balanced structure that is reversible, lies flat, can be extended to any depth and is elastic. Its only disadvantage is that it can become baggy during washing and wear unless knitted tightly. Apart from old Cottons Patent Rib Frames, most garment-length knitting machines can knit this welt.

The *split welt* is actually a tubular welt knitted at the end of the garment sequence instead of at the beginning. It is used as an open tube for a collar or stolling, to fit over the cut edge of a garment to which it is then linked by a through stitch.

16.2.2 The roll welt

The roll welt (Fig. 16.5) is produced by knitting approximately four courses on one set of needles only whilst continuing to hold the setting-up course of loops on the other set of needles. It is bulkier and less elastic than the tubular welt and has the disadvantage of long held loops. This welt is knitted particularly on half-hose and links-links garment-length circular machines.

A *reverse roll welt* is knitted for sleeves with turn-back cuffs and for turn-over top socks. To obtain this welt, the opposite set of needles (the bottom set of needles on half-hose machines) are caused to hold their loops so that the roll of the welt appears on the other side of the structure, but it is on the face when the fabric is folded over.

16.2.3 The racked welt

The *racked welt* (Fig. 16.6) is neat and inconspicuous, rather like the set-up course of hand knitting in appearance, and is favoured for collars and other trimmings. It

Skechers EX1050
Skechers v Nike

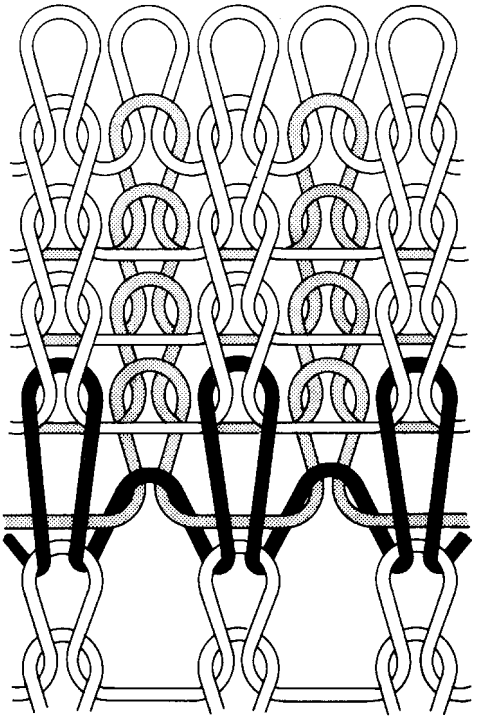

Fig. 16.4 Tubular welt.

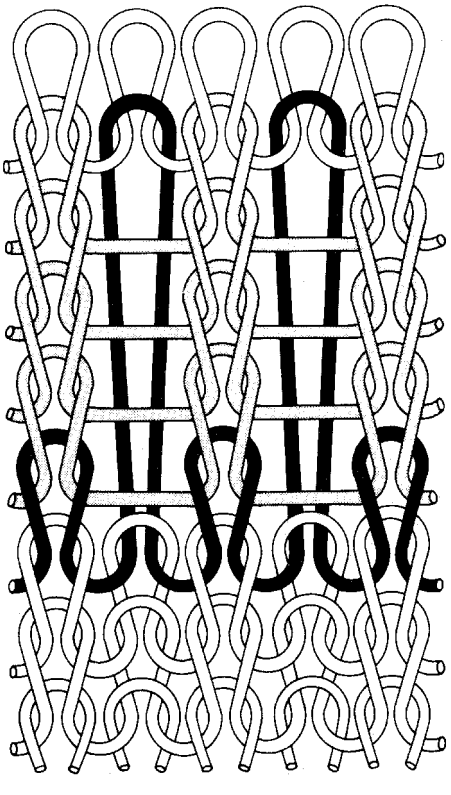

Fig. 16.5 Roll welt.

Skechers EX1050
Skechers v Nike

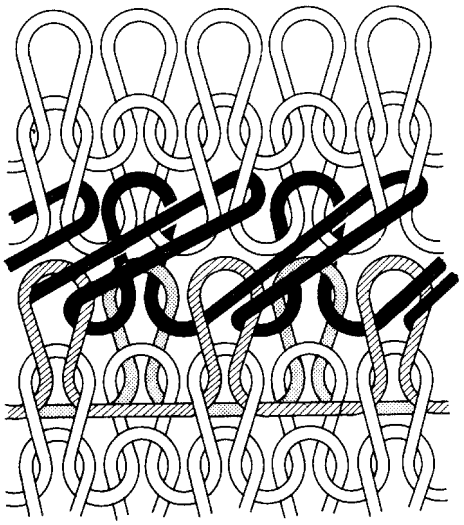

Fig. 16.6 Racked welt.

is not as elastic as the other two welts and is normally only knitted on V-bed flat machines. It is produced by racking the needle bed by one needle space after the set-up course and retaining this arrangement.

16.3 Separation

Knitted articles are often produced separately on single-cylinder machines, Cottons Patent machines and some flat machines. Others are knitted in continuous string formation on many flat and circular rib and purl machines because fabric tensioning is dependent on a continuous length of fabric between the needles and the take-down rollers. Also, there would be a danger of latches not being open at the start of a new garment sequence.

If the string of garments is separated by cutting, there is a danger of either the welt being damaged or of unwanted yarn not being removed. For these reasons, some form of separation course is usually provided, normally in the form of a *draw thread course*, preceding the first course of the new garment.

The draw thread is usually a smooth strong yarn that may be knitted as a slack, plain tubular course to facilitate easy removal. The tubular draw thread course does not unrove accidentally during wet processing.

A second method is the press-off draw thread construction, which, although more expensive in time and yarn, tends to be more popular. The course preceding the start of the new garment is knitted in 1×1 rib and then one set of needles presses-off its loops, leaving a single plain course of extra long drawthread loops that can be quickly and easily removed. Prior to the press-off course, locking courses are produced by knitting three or more additional courses, only on the set of needles that are to press-off. These help to reduce tension in the structure after pressing-off and thus reduce the possibility of laddering back.

A popular alternative to a draw-thread, employed on half-hose and sock

Skechers EX1050
Skechers v Nike

machines, is to knit a number of courses in a soluble yarn such as alginate. The socks are separated by cutting, and the remaining courses of yarn are dissolved away during finishing to leave a neat edge to the welt.

Most garment-length machines using two needle beds have a butt arrangement of two long, one short for each bed, enabling 2×2 rib knitting after pressing off the loops of a 1×1 rib set-out and recommencment of knitting on only long butts on each bed in turn.

16.4 Imparting shape during knitting

In addition to facilities for garment-length sequence knitting, weft knitting provides unique opportunities for width-wise shaping during knitting, with the sequence being initiated and co-ordinated from the same central control mechanism.

The three methods of width shaping are:

1 varying the number of needles in action in the knitting width,
2 changing the knitting construction, and
3 altering the stitch length.

16.4.1 Wale fashioning

Wale fashioning is the normal manner of shaping (symmetrically or asymmetrically) on straight bar frames (Figures 16.7 and 16.8). It involves the transfer of loops from one needle to another within the same needle bed, either transferring onto selvedge needles that are to start knitting (*widening*) or transferring from needles that are to cease knitting (*narrowing*).

The fashioning technique has, in the past, been generally restricted to plain fabric structures although there were a few rib straight bar frames. There is now an increasing number of automatic V-bed flat machines with additional beds of fashioning points or rib loop transfer needles. Each transfer bed operates onto a specific needle bed (Fig. 16.9).

Fashioning can also be achieved by needle-to-needle rib loop transfer, racking

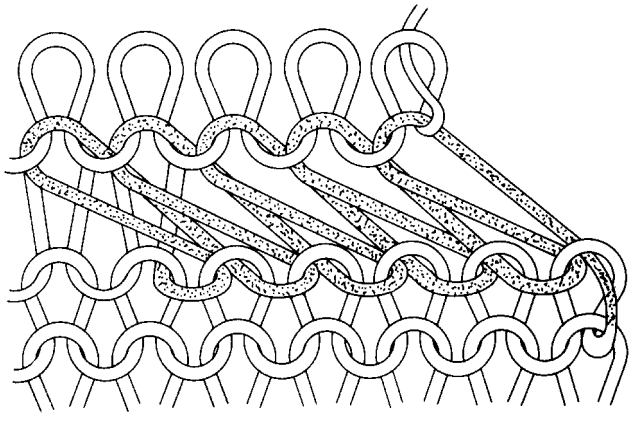

Fig. 16.7 Wale fashioning (narrowing).

Skechers EX1050
Skechers v Nike

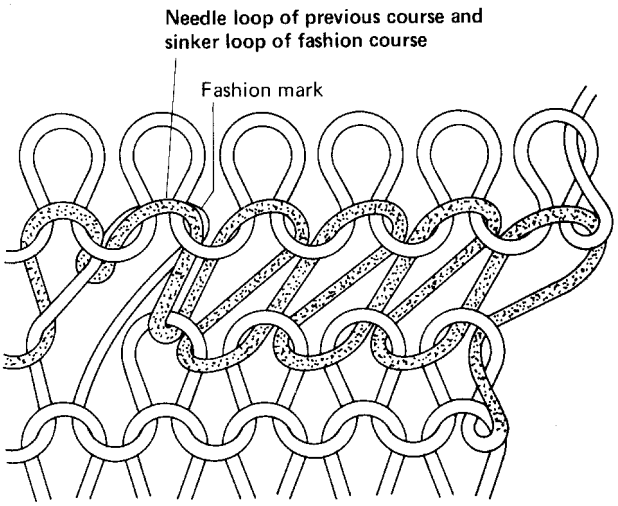

Fig. 16.8 Wale fashioning (widening).

one bed, and transferring back to the original needle bed, but this technique requires receiving needles to be empty of loops.

The firm, fashioned selvedge edges can be point- or cup-seamed together, without the need for cutting and seaming to shape involving loss of expensive fabric. The shaping angle is varied by changing the fashioning frequency (i.e. the number of plain courses between each fashioning course), aided by the possibility of four-needle or two-needle as well as single-needle narrowing. A block of loops is transferred at a time, so that the transferred loop effect (*fashion mark*) is clearly visible in the garment, away from the selvedge, as this is a hall-mark of classic fully-fashioned garments.

Widening involves transferring the loops of a group of needles outwards by one needle, thus leaving a needle without a loop that would produce a hole if it was not covered by the action of filling-in.

Figure 16.8 shows the effect of using a single filling-in point that is set slightly in advance of the innermost fashioning point. It has an independent vertical movement and takes a stitch from the previous course, placing it onto the empty needle. Another technique in order to cover the hole is to use two half-points to transfer the half limbs of two adjacent needle loops sideways.

A similar technique as been developed for automatic V-bed machines, when it is termed a *split stitch* (Fig. 16.10).

16.4.2 The calculation of fashioning frequencies

Using the details shown in Fig. 16.11 as an example, the following sequence is necessary in order to calculate the required fashioning frequencies from the dimensions of a garment part:

1 Convert the length dimensions in each section to total number of courses by multiplying the length measurement by the cpi. Thus, $7 \times 20 = 140$; $4 \times 20 = 80$; $5 \times 20 = 100$ courses.

Skechers EX1050
Skechers v Nike

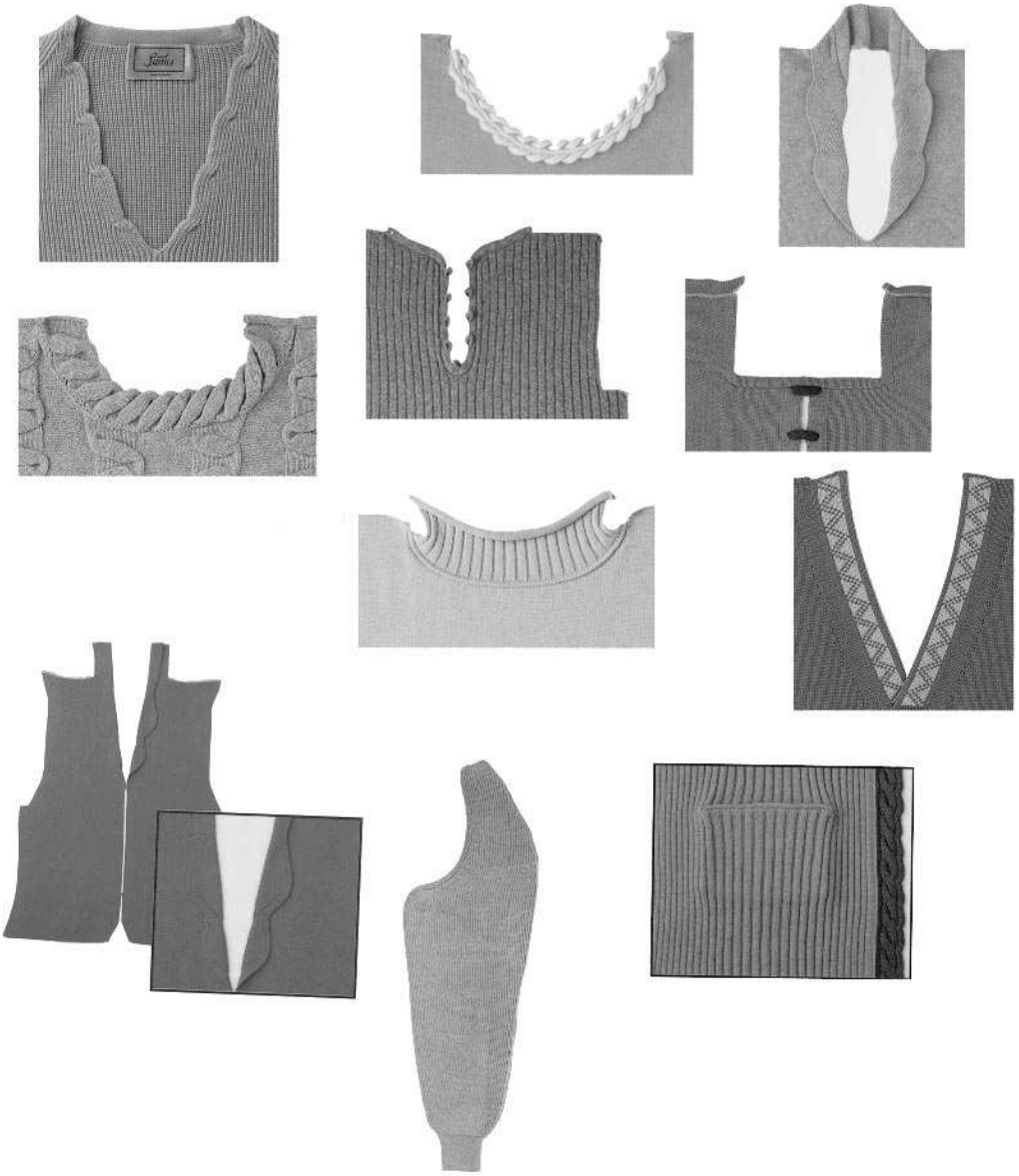

Fig. 16.9 Integrally shaped rib garment pieces. The machine has an additional bed containing the transfer points [Shima Seiki].

2 Convert the width dimensions at the start of each section to total numbers of needles by multiplying the width measurement by wpi. Thus, 16 × 16 = 256; 18 × 16 = 288; 8 × 16 = 128 needles.
3 Calculate the total number of needles increased or decreased from one section to another by taking one total from the next.
4 Divide the totals obtained by 2 in order to obtain the increase or decrease of needles at one selvedge. Thus, 288 − 256 = an increase of 32 needles. 32/2 = 16

Skechers EX1050
Skechers v Nike

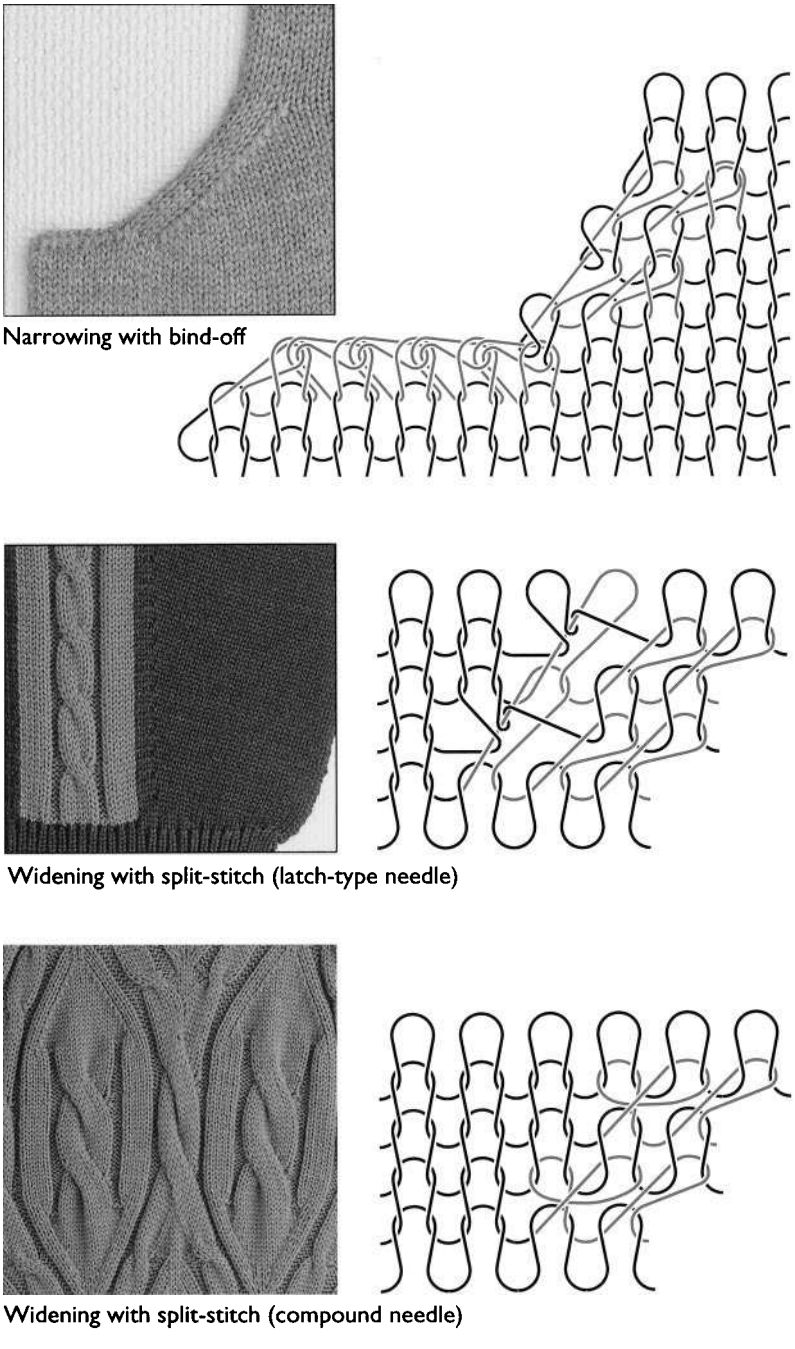

Fig. 16.10 Modern integral garment technology assures precisely-formed loops which are crucial to the production of shaped garments [Shima Seiki].

Skechers EX1050
Skechers v Nike

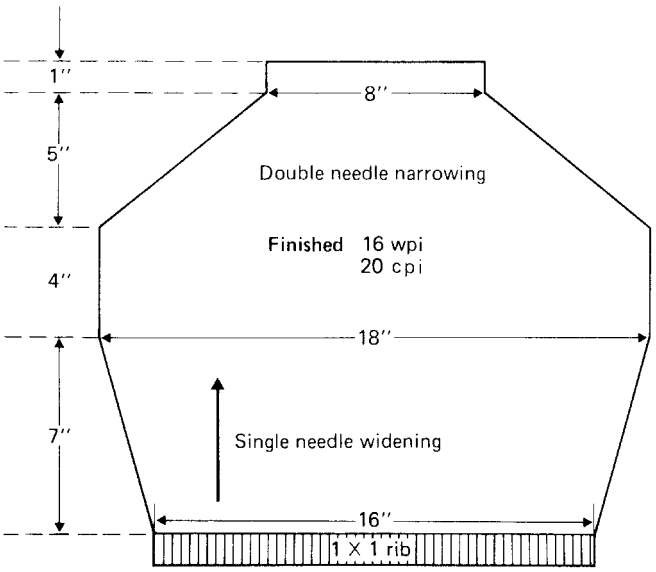

Fig. 16.11 Full-fashioned shaping calculation.

single needle widenings; 288 – 128 = 160; 160/2 = 80 needles, 80/2 gives 40 double-needle narrowings

5 There are 16 single-needle widenings occurring during the knitting of 140 courses; assuming the first fashioning occurs in the first course, there will be 15 fashionings in 139 courses; 139/15 = 9 with a remainder of 4. Thus 4 fashionings must occur at 10 course intervals and the remaining 11 at 9 course intervals.

6 Forty double-needle narrowings occur during 100 courses, again assuming the first fashioning occurs in the first course; 99/39 = 2 with a remainder of 21. Thus 21 fashionings occur at 3 course intervals and the remaining 18 fashionings occur at 2 course intervals.

16.4.3 Three-dimensional wale fashioning

Shaping by three-dimensional wale fashioning occurs within the width of needles, using an additional pair of independently-controlled fashioning boxes to shape stocking heels or bosom pouches. In the centre of the pouch, a number of needles knit plain fabric whilst on either side of them the extra sets of points widen outwards and later narrow again.

During widening, each needle that loses its loop and does not receive a new loop will commence a new wale in the next course, whereas, during narrowing, when a needle receives two loops, two wales will be caused to converge into one.

16.4.4 Needle selection shaping

In *needle selection shaping*, the selvedge needle(s) is introduced or withdrawn from the knitting width by means of needle selection. It is more convenient on automatic

Skechers EX1050
Skechers v Nike

V-bed flat machines to employ the jacquard selection to introduce empty needles for widening and to take needles out of action for narrowing

(i) by transferring and re-transferring rib loops in conjunction with needle bed racking,
(ii) by pressing-off loops, or
(iii) by causing needles to hold their loops for large numbers of traverses (Fig. 16.12) [1].

It is even possible to introduce or remove a selvedge needle from the knitting action during tubular plain knitting on a V-bed flat machine, thus achieving a certain amount of shape in the tube.

The full shaping potential of the V-bed flat machine can only be exploited if the conventional roller take-down system is replaced by an arrangement capable of accommodating itself to varying rates of production and fabric widths and even to separated garments or garment pieces.

16.4.5 Reciprocated knitting of pouches

Three-dimensional shaping of pouches can be achieved on small-diameter hosiery machines by using held loop shaping in a similar manner to flat knitting, so that the number of courses knitted by adjacent needles is varied in order to knit a pouch for a heel and, if necessary, for a toe.

During pouch-knitting, the rotating movement of the cylinder changes to an oscillatory movement. In the first half of the pouch-knitting sequence, only half the needles continue knitting, and during the reciprocating knitting, a needle at each edge is lowered out of action (narrowing) to join (in the case of heel-pouch knitting) the instep needles, which are already holding their fabric loops. When only one-third of the needles remain in action, widening commences so that needles are successively brought back into action at the edge of the pouch. When all the pouch-half of the needles have recommenced knitting, the cylinder returns to rotary knitting and circular courses are knitted, with all needles in action.

A small-diameter garment machine was developed to produce shaping for the bust or shoulder section of integrally-knitted garments using the *reciprocated pouch* principle but has not been utilised to any extent [2].

As *oscillatory knitting* is a much slower and more complicated process than circular knitting, the toe is produced as an open tube on many stocking and tights machines. It is later seamed to shape. The heel may also be knitted as a part of the leg tube, being boarded out and heat-set shaped during finishing.

One method of producing a stocking heel pouch in completely circular knitting is to knit circular courses at the first feeder and to select needles for heel section knitting at the second feeder in conjunction with striping, cutting and trapping of yarn. With this method, a part circular course is sandwiched between each full circular course for the heel section.

16.4.6 Shaping by changing the knitted stitch structure

Stitch shaping is the imparting of shape into selvedged or tubular weft knitted structures by changing the nature of the stitch structure without altering the total number of needles that are in action. It may be used for garment-shaping sequences in

Skechers EX1050
Skechers v Nike

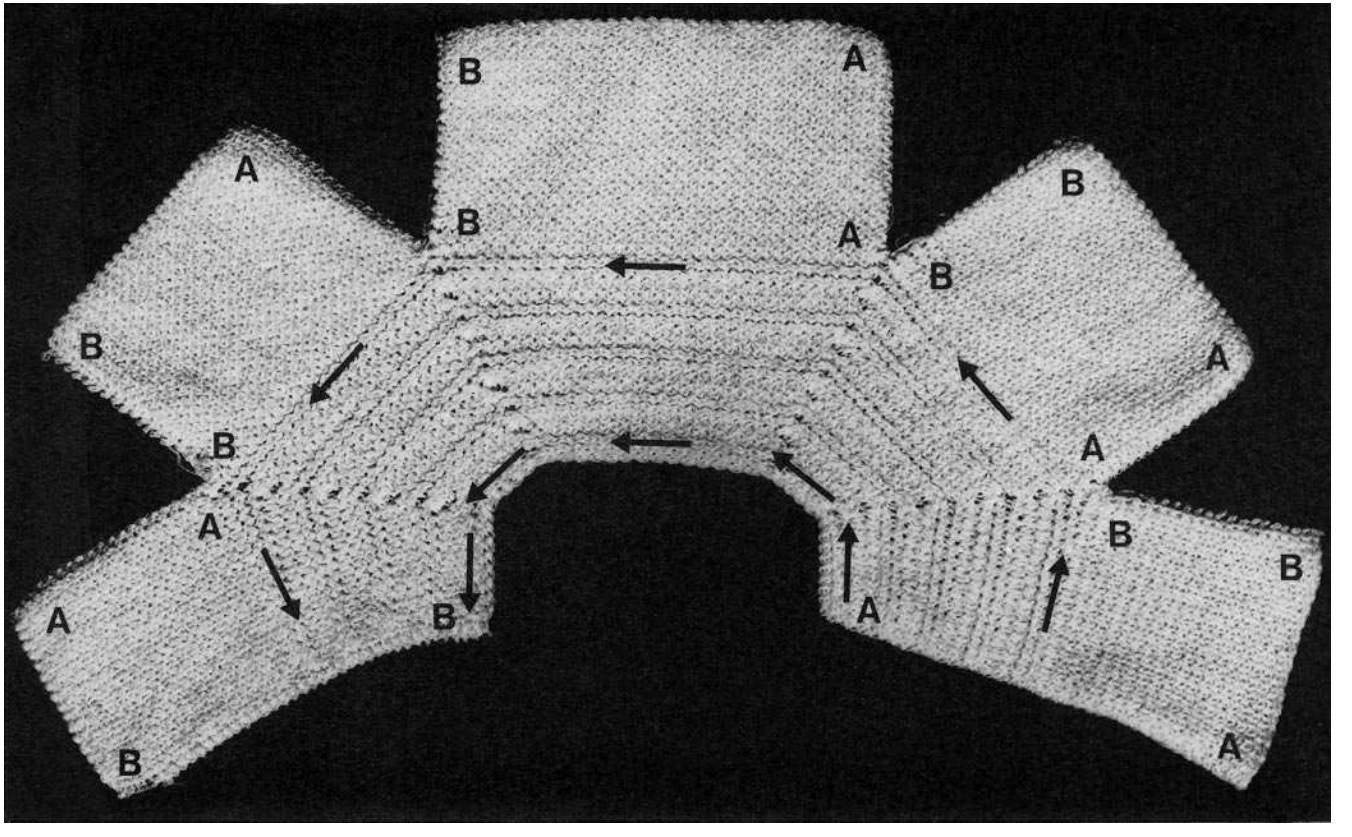

Fig. 16.12 Garment shaping by holding loops on a V-bed flat machine thus knitting wales with different numbers of courses. (A) is the commencing course and (B) the pressed-off course. A presser foot device was employed [*Knitting International*].

Skechers EX1050
Skechers v Nike

knitwear, jerseywear and underwear produced on latch needle machines. It is a simpler and faster method than fashioning and does not require specially-shaped elements, but it can only be used for a few definite step-changes of shape rather than the graduated shaping technique of fashioning.

In the sleeve and body panels of knitwear, the tuck stitches will cause half and full cardigan to throw out wider than the 1 × 1 rib border (Fig. 16.13). In ladies' stitch-shaped vests, patterned rib eyelet will produce a similar effect in the bust and skirt sections, compared with the 2 × 2 rib waist and border (Fig. 16.14).

In plain tubular fabric articles such as some socks and gloves, elastic may be inlaid on an alternate tuck/miss basis on the same needle sequence, so that the fabric concertinas into a narrower elastic 'mock rib' effect for the tops.

16.4.7 Shaping by altering the stitch length

Changes of stitch length by alteration of stitch cam positions are carried out at particular points in a garment-length knitting sequence. Even mechanical V-bed power flat machines have at least five pre-set positions that can be automatically obtained during traversing of the cam carriage. On both circular and flat machines it is also possible to change from synchronised to delayed timing in 1 × 1 rib knitting and thus produce tighter and more 'elastic' rib courses suitable for rib borders. In ladies'

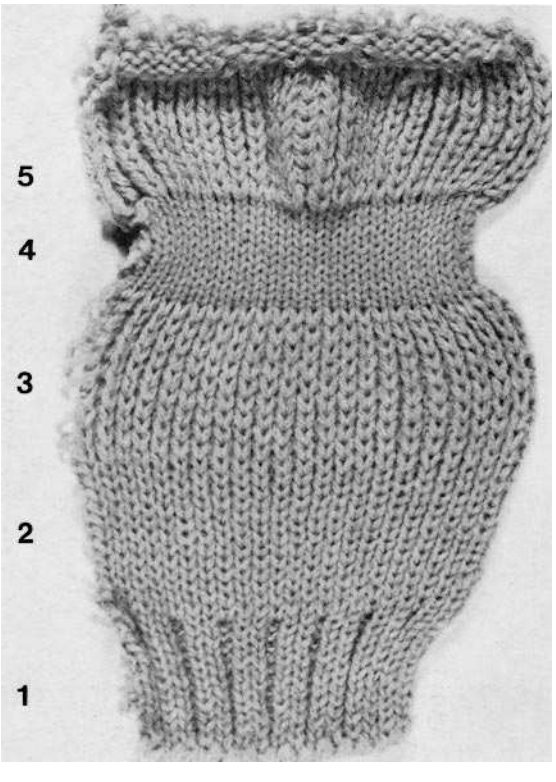

Fig. 16.13 Stitch shaping (1 = 2 × 2 rib; 2 = 1 × 1 rib; 3 = half-cardigan; 4 = tubular courses; 5 = full cardigan).

Skechers EX1050
Skechers v Nike

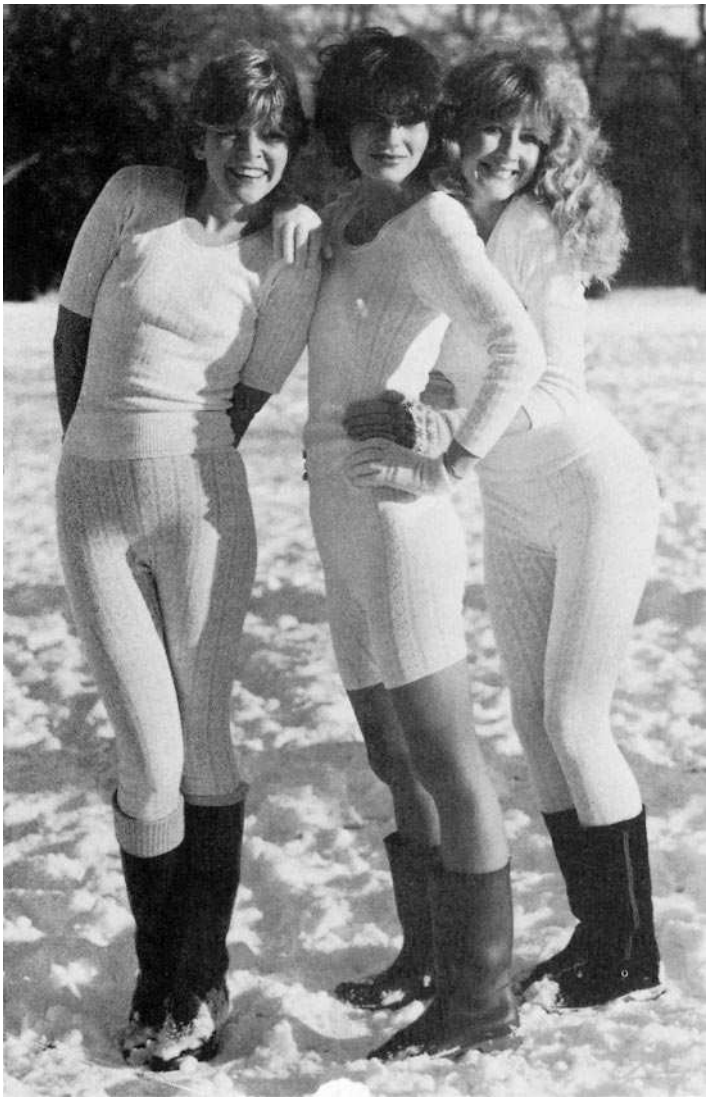

Fig. 16.14 Stitch-shaped thermal underwear in 1 × 1 rib with rib loop transfer and cylinder needle pick-up design knitted in 1/28's cotton spun 50/50 Viloft/polyester on a 10-gauge RTR (13-, 15-, and 17-inch diameters) by Twinlock [Courtaulds, Henrietta House, London].

hosiery, a *graduated stiffening* or tightening of the stitch length occurs to obtain a certain amount of shape between the thigh and the ankle.

The introduction of a certain percentage of elastane yarn into the construction of a weft or warp knitted fabric improves extension and recovery properties and therefore its form-fitting properties. The percentage elongation of the elastane yarn may be controlled during fabric finishing by heat-setting [3].

Skechers EX1050
Skechers v Nike

16.5 Integral garment knitting

An *integral garment* is one whose various parts have been knitted and knit-assembled by the knitting machine. It thus requires minimal make-up attention on leaving the knitting machine.

Integral garment knitting lowers make-up costs (including cutting), shortens throughput times, reduces work in progress and provides the opportunity to introduce new styling features. The knitting machines, however, are more complex and expensive and may be more restrictive in their operation and patterning scope. *Shima Seiki*, the Japanese V-bed machine builders, use the term *WholeGarment Knitting* to cover their own particular patented technique.

Despite the fact that integral garments are tubular and seamless, few are produced on circular machines except for hosiery and underwear (where making-up operations such as toe closing are still required). The reason is that knitting to shape generally involves wale fashioning achieved by selective loop transfer to and from needles in the same bed – a technique not readily available on circular machines.

References

1. ANON., The Basque beret; A survey of manufacturing processes, *Hos. Trade J.*, (1962), July, 92–3.
2. WIGNALL, H. and KLEE, J., Circular garments with integrally knitted sleeves, *Text Inst. and Ind.*, (1965), 3, (6), 143–8.
3. REIDER, A., New trends in elastic knitted fabrics (IFKT paper), *Knit. Int.*, (1981), 50–2.

Further information

CANZLER, R. and HIEMANN, K. H., 3D and other effects in F/F outerwear and underwear, *Hos. Trade J.*, (1964), Nov., 104–10.

GOADBY, D. R. and MILLINGTON, J., Aspects of integrated garment production, *Knit. Int.*, (1975), March, 61–2.

LANCASHIRE, J. B., Stitch constructions of knitted welts, *Hos. Trade J.*, (1964), Jan., 110–11.

OFFERMANN, P. and TAUSCH-MARTON, H. H., Knit to shape and full-fashioned knitting procedures, *Knit. Times*, (1971), 12 April, 47–55.

WIGNALL, H., The bifurcated garment: new production techniques, *Knit. Times Yr. Bk.*, (1974), 101–3.

WIGNALL, H., Garment engineering for knitted goods, *Text. Inst. and Ind.*, (1977), 15, (5), 171–3.

Skechers EX1050
Skechers v Nike

17

The straight bar frame and full-fashioning

17.1 The development of the straight bar frame

The straight bar frame is, with a number of later improvements and developments, recognisable as a direct descendant of *William Lee's* hand frame.

Credit for the development of the first acceptable power-driven rotary frame is given to *Samuel Wise* who, in 1769, replaced the foot pedals with a power-driven rotary shaft whose tappets caught against arms and levers to move the working parts. To increase productivity it was necessary to simplify the knitting action and introduce automatic mechanisms to replace hand-controlled operations. In 1857, *Luke Barton* replaced hand-controlled loop transfer points used for fashion shaping with a self-acting narrowing mechanism, and in 1861, *Paget* invented a movable needle bar.

It was, however, *William Cotton* of Loughborough who transformed the hand-controlled power-driven rotary frame into the high-speed automatic fashioning multi-head straight bar frame. This speeded the transition of knitting from a cottage-based to a mass-production industry. Between 1846 and 1864, he obtained patents which have caused the term '*Cottons Patent*' or '*Cotton Machine*' to become synonymous with that of the straight bar frame.

Cotton invented the vertically moving needle bar, developed the use of screw-controlled fashioning points for automatically widening and narrowing, and placed the driving shaft for the elements towards the base of the machine to reduce vibration.

The replacement in 1953 of the end controls by a central control unit paved the way for the modern automatic straight bar frame with its fully-programmed garment-knitting sequence (Fig. 17.1). Balanced and simplified motions, together with variable draw, have increased knitting speeds, whilst automatic actions have reduced standing time and labour supervision [1].

Skechers EX1050
Skechers v Nike

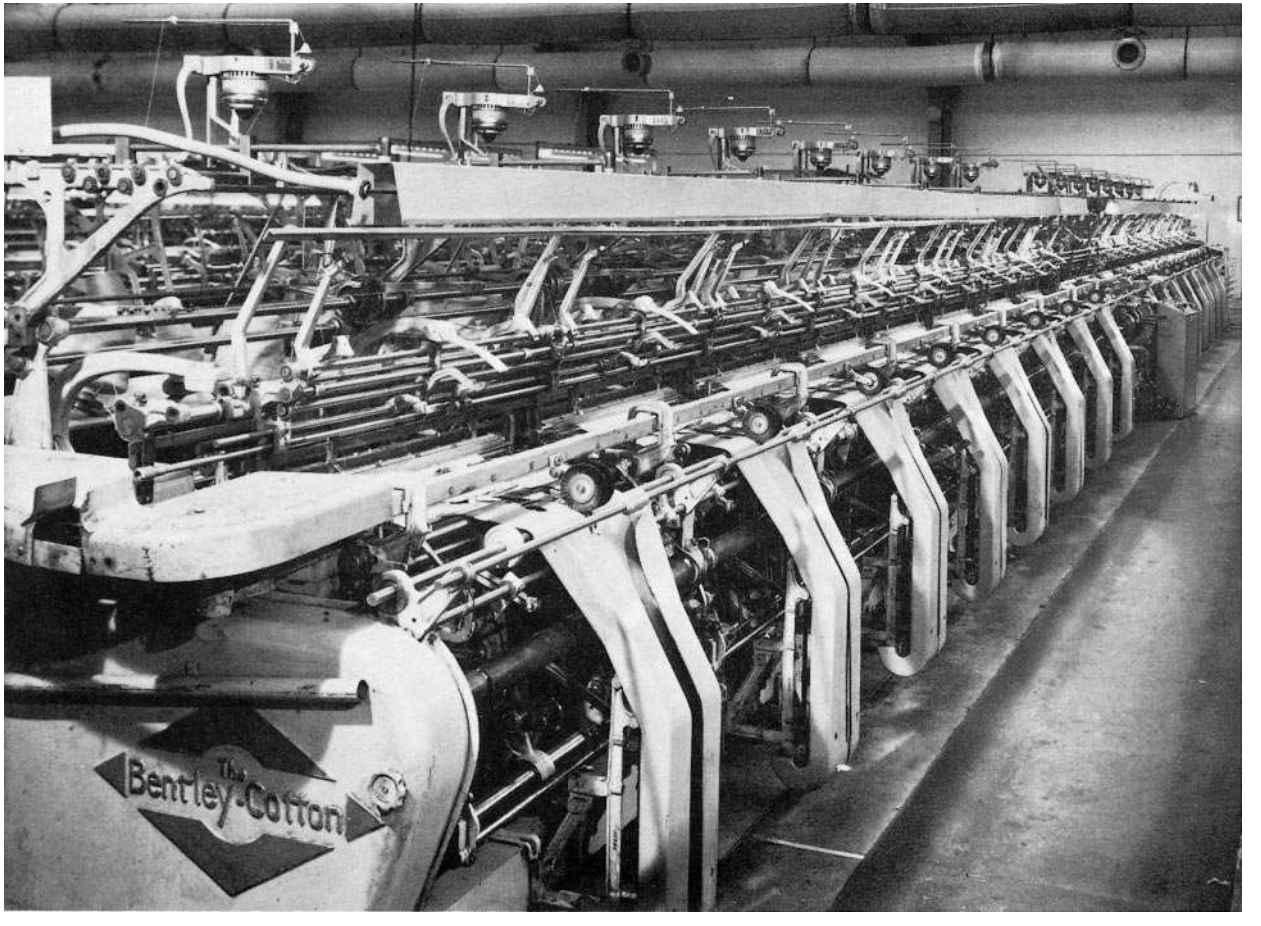

Fig. 17.1 Sixteen-head plain straight bar frame having a conveyer for transporting the rib ends to each head [Iropa].

Skechers EX1050
Skechers v Nike

17.2 Fully-fashioned articles

Excepting *knitwear*, which is a comparatively recent development, fully-fashioned or wrought products have suffered a considerable decline in fashion demand during the twentieth century as a result of the improvement of cheaper manufacturing techniques in other sectors of weft knitting including, more recently, the development of heat-set shaping based on the use of thermoplastic fibre yarns such as nylon.

Fully-fashioned half-hose and socks were the first to be replaced by circular knitted products between 1900 and 1920.

17.3 Stocking production

Fully-fashioned nylon stocking-production reached a peak in the 1950s, with automatic machines having up to forty divisions, each 15 inches (38 cm) wide, in popular gauges of 51 G and 60 G (needles per $1\frac{1}{2}$ inches/38 mm). Each stocking blank, which has a turned welt top, shaped leg and foot, round heel pouch, and diamond point toe, was completed in 30 minutes and pressed off from the few needles still knitting. The stocking blank selvedges were then *cup-seamed* (joined together with a seam that passed straight down the back of the leg and underneath the foot). By the end of the fifties, however, fashion was swinging over to the bare leg look of the cheaper, heat-shaped, circular knitted, seamless stocking, and production of fully-fashioned stockings declined rapidly during the early 1960s.

Today, fully-fashioned stockings provide a niche market for a handful of specialist knitters [2].

17.4 Underwear and knitwear

Fully-fashioned underwear, such as men's undershirts and pants (union suits) and women's vests, panties and combinations, were popular until fashion changed during the 1920s; from then onwards the surplus machine capacity was used for knitting outerwear. Attention was concentrated on women's twin-sets and men's pullovers. Classic knitwear styles became very fashionable after the Second World War and production was aided by new machine attachments such as that producing the V-neck shape [3].

Today, outerwear straight bar frames with 16 knitting sections, each 32 or 34 inches wide, may be as long as 77 feet (23.5 metres), and weigh 70 tons. The gauge is still expressed in needles per $1\frac{1}{2}$ inches so that the popular 21-gauge is actually $21 \times 2/3 = 14$ needles per inch. The normal gauge range is from 9 to 33. Typical yarn counts for 9, 21, 24 and 33 gauges respectively are 2/10's, 2/24's, 2/28's and 2/40's worsted count (NeK) or 175, 74, 64 and 44 tex. Knitting section widths range from 28 to 36 inches (71–91 cm) for bodies and 20 to 22 inches (51–56 cm) for sleeves, the wider sections being useful when using higher shrinkage synthetic yarns.

17.5 Knitting motions of the straight bar frame

The three directions of motion required for the knitting action are provided from two separate sources. The rotary motion of the cam-shaft produces the vertical and

Skechers EX1050
Skechers v Nike

horizontal movement of the fashioning points and the needle bar. The sideways reciprocating movement for the yarn carriers and for introducing the sinkers in serial sequence via the slurcock is obtained from a coulier or draw cam attached to a shaft, set at right angles to the main cam-shaft at the back of the machine, which oscillates a draw lever. A variable draw ensures that the stroke of the draw is related to the varying knitting width. Thus, more courses per minute are knitted on narrower widths. Operating speeds of a hundred courses per minute can be achieved.

17.6 Knitting action of the plain straight bar frame

Figure 17.2 shows the cross-section of the knitting head containing the following elements:

A *Bearded needle*, having a cranked end for location in the tricked and drilled needle bar.
B *Sinker* – only one between every other needle space – with a reinforced back and, at the front, a 'catch' to sink the yarn around the needles, and a 'neb' to separate the old and new loops until knock-over.
C *Divider*, occupying each remaining space, usually having the same shaped front as the sinker but with an extended tail at the back.
D *Knocking-over bit* – one directly beneath each sinker and divider – having a 'throat' for holding the loops and a 'nose' for knocking-over.
E *Needle bar*, having a compound horizontal and vertical movement.
F *Striking jack*, fulcrummed at its lower end, each one with its 'nose' resting on a sinker back, and a 'spring' exerting pressure on its 'tail'.

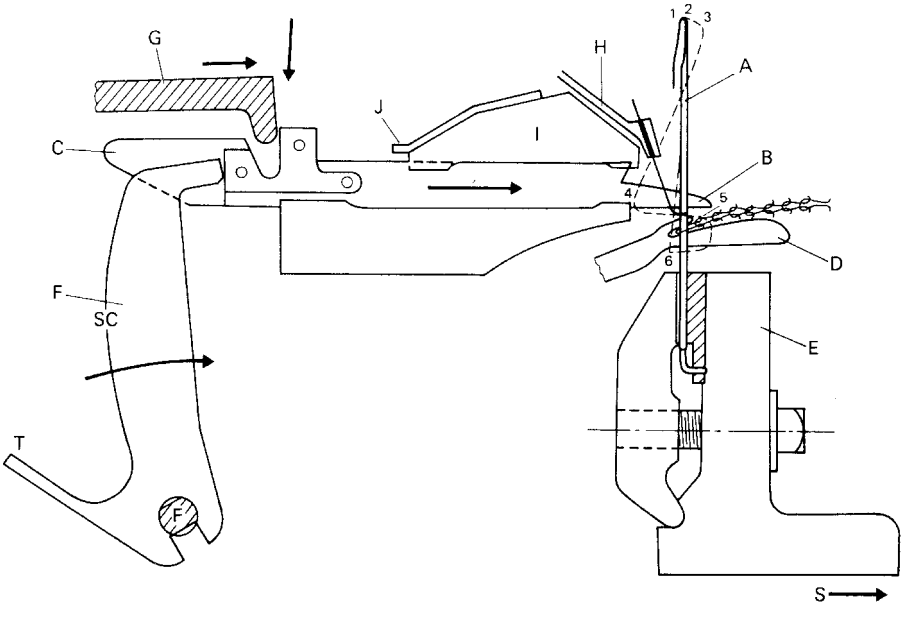

Fig. 17.2 Knitting head of the straight bar frame.

Skechers EX1050
Skechers v Nike

G *Catch bar*, extending the full width of the knitting head, having forward and backward, as well as vertical, movement.

H *Yarn carrier*, which traverses in alternate directions across the head from one course to the next – up to six carriers may be available. The carrier is connected to a reciprocating carrier rail by friction, and when the carrier is arrested by its carrier stop, the carrier rail completes its full traverse, driven by the coulier cam and punching through the carrier friction.

J *Falling bar*, which is a stop that cushions the advance of the sinkers and dividers.

Figure 17.3(a–f) shows the movement of the knitting elements to produce one course of loops:

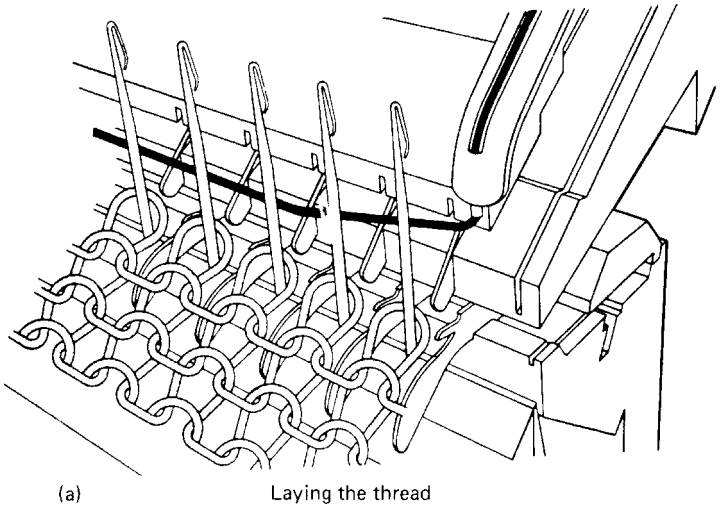

(a) Laying the thread

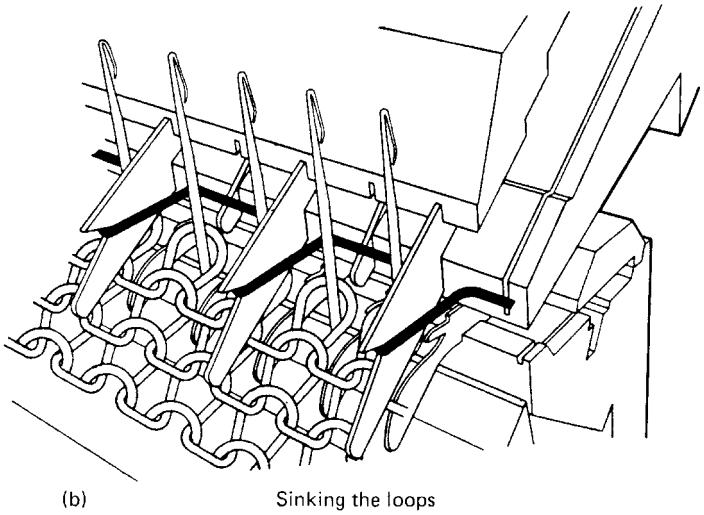

(b) Sinking the loops

Fig. 17.3 Movement of knitting elements.

Skechers EX1050
Skechers v Nike

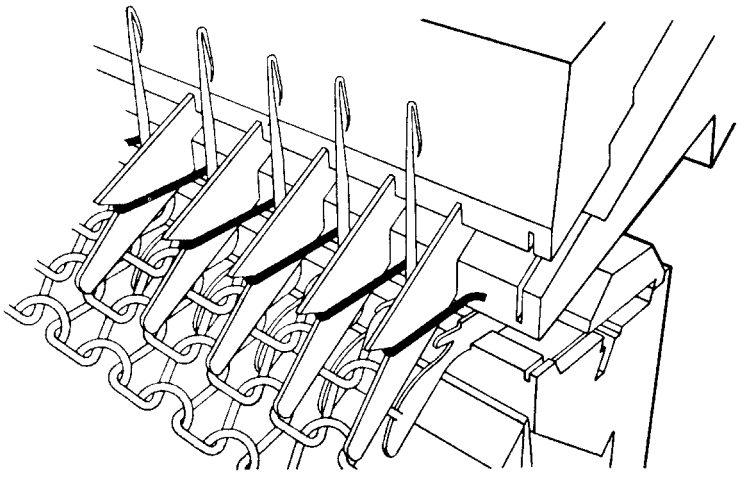

(c) Dividing the loop

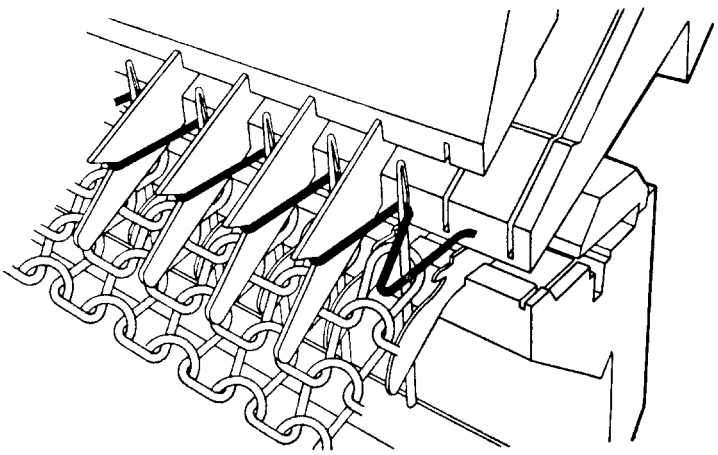

(d) Pressing

Fig. 17.3 cont'd.

Thread laying (a). The carrier moves across the knitting head, laying the yarn on the noses of the sinkers and dividers and on the beard side of the needles.

Sinking (b). The slurcock (one for each knitting head), travelling behind the carrier, contacts the jacks (Fig. 17.2); it is shaped so that each jack in turn pushes the sinker forwards to kink a loop around every two adjacent needles.

Dividing (c). The catch bar moves the dividers forwards, collectively, whilst the needle bar tips slightly outwards to allow the double loops to be divided into equal-sized needle loops around every needle.

Pressing (d) and *landing* (e). The needle bar descends, placing the new loops inside the hooks of the beards. The catch bar is now lowered so that the sinkers, as well as the dividers, are collectively controlled by it for the rest of the knitting cycle. They now start to withdraw. The needle bar moves towards the sinker verge, causing the beards to be pressed. A further downward movement of the needle

Skechers EX1050
Skechers v Nike

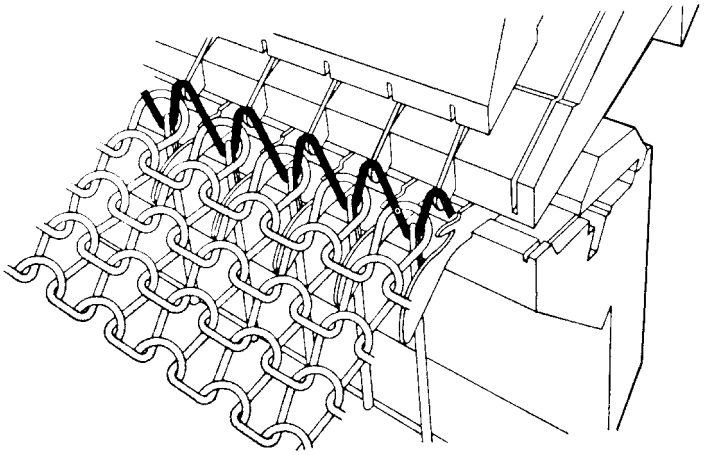

(e) Landing the loops

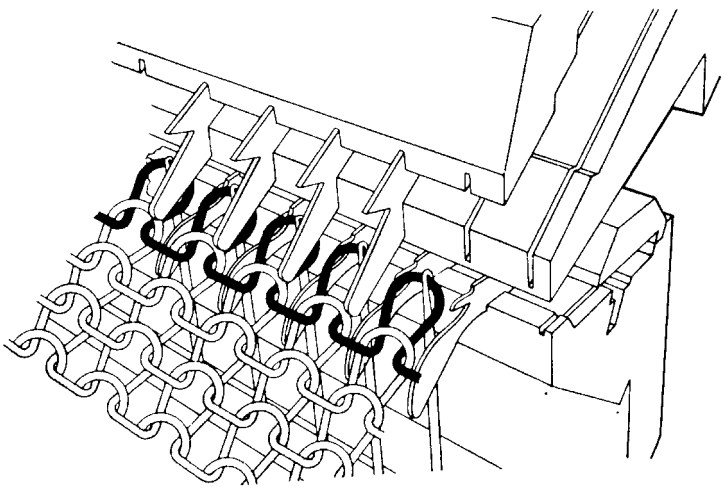

(f) Knocking-over the loops

Fig. 17.3 cont'd.

bar 'lands' the previous course of loops, resting on the knock-over bits, onto the closed beards.

Drop-Off. As the needle bar moves away from the pressing-edge, the sinkers and dividers withdraw so that the newly-formed course of loops drops off their noses onto the knocking-over bits.

Completion of knock-over (f). The needle bar descends to its lowest position. As the heads descend below the belly of the knocking-over bits, the old course of loops is collectively knocked-over.

Holding-Down. As the sinkers and dividers move collectively forward to hold down the fabric, the needle bar rises to the thread-laying position. The catch bar is slightly raised to release the sinkers for individual movement at the start of the next course.

Skechers EX1050
Skechers v Nike

On coarser gauge machines it is possible to accommodate sinkers with reinforced butts between every needle space, thus eliminating dividers and their action. Some machines have selvedge dividers with a lower forward ledge so that when the yarn carrier stops over one divider, the next divider inwards from it will be the last to take that traverse of yarn, which will slide into its specially-shaped lower throat and form a tight selvedge.

17.7 Loop transfer

Loop transference is used not only for fully-fashioned shaping on straight bar frames, but also for making lace stitch patterns and for introducing marking or drop stitch effects. The positioning and sideways traverse of the points will depend upon the effect required. This sideways traverse of the points is usually achieved by some type of screw thread (Fig. 17.4).

To produce a drop stitch, the tip of the point is turned away so that, for example, when knitting a cardigan front, the loop is collected from the centre needle towards the end of the cycle sequence and is cast-off from the point to form a ladder as a guide for cutting.

A fashioning course or '*dip*', like the knitting action, requires one revolution of the main cam-shaft, but the speed of production is lower with about 50–60 rpm being achieved during fashioning instead of 60–100 rpm during straight knitting.

Fashioning involves a set of points being positioned to cover the needles of each selvedge and the cam-shaft being shogged sideways to present a set of fashioning cams to the cam followers or lever rollers, in place of the knitting cams. The fashioning cams only take the needle bar to an intermediate height and the needles are slightly tipped to allow the points to descend to cover them. At the same time, the coulier motion that drives the yarn carriers and slurcock is disconnected.

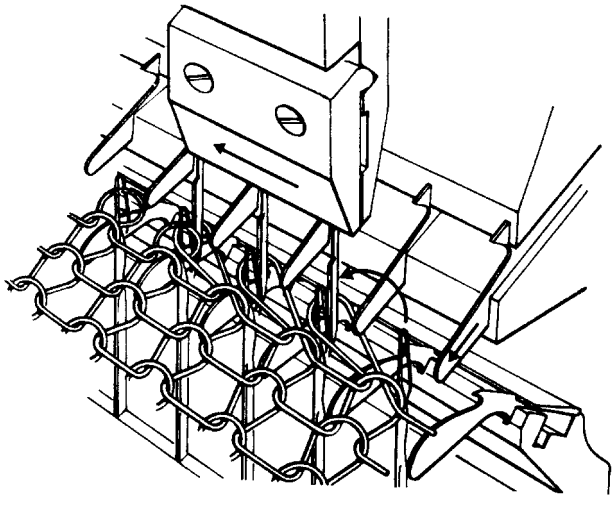

Fig. 17.4 Fashioning points.

Skechers EX1050
Skechers v Nike

17.8 The fashioning action

Figure 17.5(a–f) illustrates the fashioning action for either narrowing or widening:

(a) The fashioning points descend and the needle bar tips backwards to clear them.

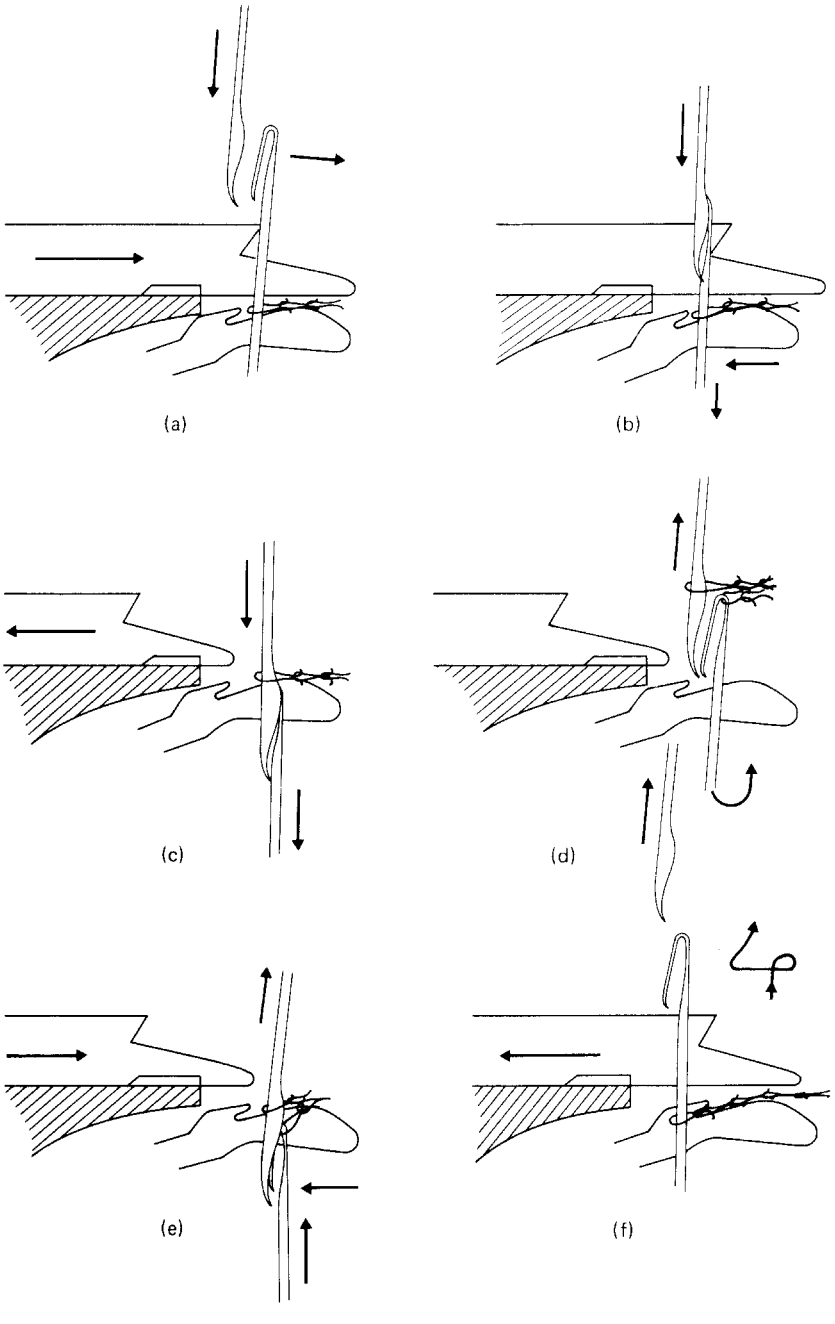

Fig. 17.5 The fashioning action.

Skechers EX1050
Skechers v Nike

(b) The needle bar moves towards the points, causing the beards of the needles engaged with points to be pressed and '*boxed*' or located in the grooves of the points.
(c) The sinkers and dividers, which are collectively controlled by the catch bar, retire, and the needles and points descend together below the knocking-over bits, so that the loops are cast-off onto the points.
(d) The needles and points now rise and move clear of each other so that the points can make the sideways 'fashion rack' at each selvedge, either by one needle for widening or by one, two, or four needles for narrowing.
(e) The needles and points now descend and the needles 'box' with the points again so that they receive the transferred loops. As the needles and points descend below the sinkers, the sinkers and dividers move forward to hold down the loops.
(f) Once the needles have slid up into the grooves of the points to receive the loops, the points rise to their high inoperative position. The needle bar rises, causing the transferred loops to slip down onto the stems and the cam-shaft is shogged back to the left again so that knitting can restart.

17.9 Automatic control

On straight bar frames, a ratchet selector was employed which could, through the introduction of racking pawls and a choice of rack wheels having different numbers of teeth, turn a shaft to produce (usually) two fashioning actions during each of its revolutions. Each rackwheel thus produced a different fashioning frequency. The operator, however, had to set the machine for widening or narrowing, choose the frequency, count fashionings, and terminate the action.

A control chain was later introduced that could automatically initiate the fashioning, insert a slack course, control the machine speed, and operate a chain saver. Soon, the demand for a cheaper, simpler and quicker method of changing styles or sizes led to the development of an electronic console unit, programmed from a punched plastic card film. On the card film there is provision for 23 punched-hole positions across its width, each position being scanned by a dropper pin.

To become fully automatic, control of the following was necessary: courses and fashioning; changing from widening to narrowing; initiating the rib transfer or welt turning; stopping the machine on completion of the set; racking back the carrier and stops for the next starting width; laying the yarn for the start of the next garment; controlling the machine speed; inserting the initial draw-off; and severing connecting yarns after pressing-off the previous garment piece.

17.10 The welt

The turned welt of doubled plain fabric that is produced on stocking frames is usually less acceptable for the start of a garment panel – a rib border is often preferred. Straight bar rib frames have been built but they have proved to be complex and uncompetitive against faster and more versatile V-bed rib flat machines.

A popular technique is to knit the rib borders or cuffs on a specific-purpose

Skechers EX1050
Skechers v Nike

V-bed flat machine and then to transfer them, using the last required course, loop-by-loop onto the points of a special '*topping-on bar*' ('*running-on*'). The fabric is then transferred onto the needles of the straight bar frame ('*barring-on*'). Six ribs may be transferred at a time but only the topmost is placed on top of the knocking-over bits and underneath the sinkers, ready for knitting the plain onto it. It is a common practice to employ '*doubling*', i.e. to have more wales in the rib than in the plain so that, during running-on, two rib loops are sometimes run onto the same points. In this way, the rib is in a more relaxed state and gives a better fit.

Rib transfer has been automated by using a conveyor to transport loaded rib transfer bars from one end of the machine to the individual knitting heads (Fig. 17.1). Each bar is transferred to the holders of the automatic rib transfer mechanism, in readiness for rib transfer at the start of the next garment cycle. Arms then advance the rib transfer holder and present the new rib to the needles. Empty bars are replaced on the conveyor, which automatically returns them to the loading station for refilling.

This operation has reduced standing time from an average of five minutes to a matter of a few seconds and has enabled the knitter to supervise more knitting heads. At the start of knitting on the straight bar frame, an initial draw-off engages the ribs or welt rods whilst sufficient courses are knitted for them to be engaged by the main draw-off arrangement.

Special V-bed flat machines have been designed for automatic rib knitting and magazine bar loading. A four-head machine can knit an average body rib in 1 min 25 sec at 60 courses per minute (cpm), or in less time without doubling. The machine is pre-programmed to knit a cotton course, which is taken by the hook-up bar of the take-down mechanism, followed by the tubular welt and rib in 1×1, 2×1 or 2×2.

On completion of the rib, a separate mechanism actuated by a cam on the main cam-shaft causes the front bed loops to be transferred to the back bed. A transfer bar then descends to collect these loops and transfer them onto the points of the magazine bar. A maximum of sixteen ribs can be accommodated. Doubling on every seventh needle on a 14 npi machine can be achieved, if desired, for a 21 G garment.

17.11 The rib-to-plain machine

Despite automation in transferring rib border fabric from the V-bed flat machines onto straight bar frames, the operation requires the co-ordination not only of the fabric but also of extra labour and machinery, and involves additional factory space. The rib-to-plain technique [4] pioneered by *S. A. Monk* tried to overcome these problems. It involves a straight bar frame that can knit an integral rib border start with a less complex mechanical action than that of the conventional rib frame. During rib border knitting, an ancillary set of horizontally-arranged latch needles ('*machine needles*') co-operates with only the even needles of the vertical bearded needle bar ('*frame needles*'). At the commencement of the fully-fashioned panel, the machine needles transfer their loops onto the re-introduced odd frame needles so that a full set of plain needles is in action (Fig. 17.6). Unfortunately, this and the Bentley Cotton CRP were capitally expensive and complex, and never seriously challenged the existing method of automatic rib transfer.

Skechers EX1050
Skechers v Nike

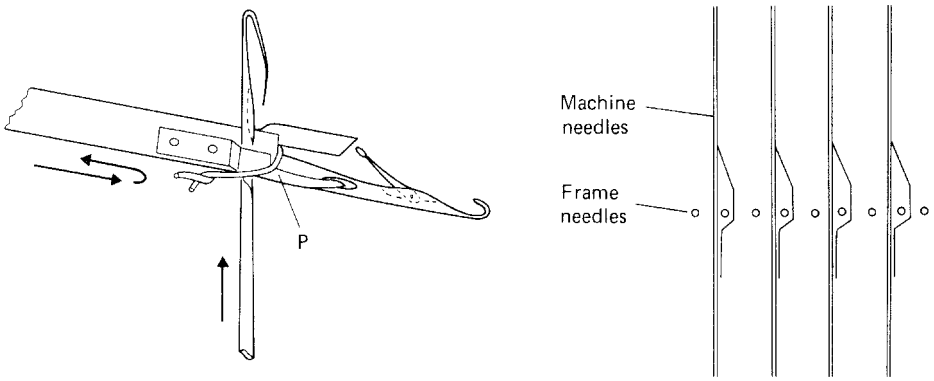

Fig. 17.6 Rib to plain.

17.12 Patterned structures

Although noted for the production of plain, classic, fully-fashioned knitwear, the straight bar frame is capable of utilising stitch patterns whose scope is dependent upon the particular machine's facilities. These may include lace, coloured designs, tuck stitches and combinations of these stitches [5].

Lacing points operate in a similar manner to fashioning points. Sets of points fixed in boxes will produce symmetrical effects, whereas individually-controlled points may be used to produce motifs. Between transfer actions, the points are racked sideways for re-positioning. Lace effects are determined by the type of pattern control, the number and type of points available, the point set-out, the direction and extent of the transfer movement, and the number of plain knitted courses between transfer actions [6].

Cable stitch designs in two-cord cross-over of three wales are possible on some machines, with the cord being emphasized by removal of a number of needles on either side of it, leaving a gap up to the adjacent wales.

Coloured designs are achieved with a number of carrier rods having different coloured yarns. The designs range from simple horizontal stripes to plating and elaborate intarsia patterns. One machine also uses guides in order to make *tartan designs* [7].

Tuck stitch designs are generally achieved by replacing the leading pressing edge of the sinker bed with individual presser bits, one for each needle beard. The presser bits are carried on slides that receive their forward pressing movement from steel strips on a tambour (drum). Punched positions in the steels do not advance their slides and thus produce tuck stitches. After each course, a different selection may be produced by racking the drum.

17.13 The challenge of latch needle machinery

Few new straight bar frames are now being built. Instead, existing machines are being 'recruited' (up-dated) to meet the challenge of the V-bed machines, with their ever-improving patterning and shaping facilities. New frames tend to be in fine

Skechers EX1050
Skechers v Nike

gauges, with patterning capabilities not easily achievable on V-bed machines, such as 30 gauge (30 E) intarsia [8].

The *Steiger Vesta Multi* is a multi-head V-bed flat machine designed along simple lines to knit shaped garment pieces in rib or plain. The machine has four double-system knitting heads, each with a width of 106 cm (42 inches), and between 8 and 16 individually-driven yarn carriers, in a machine length of only 703 cm (23 feet). The bed tricks have only two elements; a retracted stitch transfer needle and a spring-less jack. Bi-stable mono selectors individually select the needles.

Each cam system has three-way selection and stitch transfer facilities in both directions, independently of direction of carriage traverse. The cam carriage is open and yarn feed is direct. The take-down is positioned directly below the loop-forming area so that only a few or all the needles can knit on the same setting. After narrowing-down to only a few needles, it is possible to widen-out to the full-width, knitting a short interlock structure sequence in order to start a new fabric piece.

References

1. START, E., Developments in automatic fully-fashioned outerwear machines (IFKS Paper), *Hos. Trade J.*, (1961), Nov., 115–18.
2. ANON., Back to the future, *Knit., Int.*, (2000), Feb., 17.
3. ANON., Full-fashioned knitting. A 50-year survey, *Knit. Ow'r Times Yr. Bk.*, (1968), 225–30.
4. SPENCER, D. J., Knitting technology (First and Second Editions), (1983, 1989), Pergamon Press, Oxford, UK.
5. CANZLER, R., Novel effects in full-fashioned knitting, *Knit. O'wr Times*, (1969), 22 Sept., 84–97.
6. LANCASHIRE, J. B., Patterning with points in full fashioned knitting, *Hos. Trade J.*, (1959), May, 90–100.
7. ANON., Scheller BSW, *Knit. Times*, (1980), 21 April, 12–13.
8. ANON., 30-gauge F/F intarsia, *Knit. Int.* (1994). May, 32–34.

Further information

ANON., Symposium on fully-fashioned knitting (articles published in the *Hos. Trade J.* between August and October 1970, also published in booklet form.).
BRADLEY, S. B., *Fully fashioned hose manufacture*, (1953) Harlequine Press, Manchester, UK.
JURENAK, A., The Vesta multi-compact machine. *Knit. Tech.*, (1/99), 14–15.
MILLINGTON, J., Fully-fashioned, *Knit. Int.* (1996) Nov., 48, 49.
MILLS, R. W., *Fully fashioned garment manufacture*, (1965) Cassell, London, UK.

Skechers EX1050
Skechers v Nike

18

Flat knitting, basic principles and structures

18.1 History

The first *flat bar machine* (Section 8.4.2) was demonstrated in 1862 and patented in 1865 by the *Rev. Isaac Wixom Lamb*, an American clergyman. He later changed the arrangement to the inverted V-bed shape patented by *Eisenstuck*.

18.2 The two types of flat machine

Two types of flat machine evolved. The widely used *V-bed rib* machine and the slower, more specialised *flat bed purl* or *links-links machine.*

V-bed machines have two rib gated, diagonally-approaching needle beds, set at between 90 and 104 degrees to each other, giving an inverted V-shape appearance.

Flat bed purl (links-links) machines have horizontal needle beds. They have been employed mainly in knitting simulated hand-knitted constructions of a speciality type, such as cable stitch, basket purl, and lace patterning. They use *double-headed latch needles* that are transferred to knit in either of two directly opposed needle beds. The non-knitting hook is controlled in the manner of a needle butt by a *slider* that hooks onto it. There is a set of sliders in each needle bed whose butts are controlled by the traversing cam-carriage to produce knitting or transfer of the needles (see Section 7.5).

These complex and slow machines are no longer built because the modern electronic V-bed machines can knit all the links-links designs using the facilities of rib loop transfer and needle bed racking.

Early *intarsia* machines employed a different approach, using only one needle bed to knit solid colour designs. Now, however, many modern V-bed machines have intarsia-patterning facilities and are no longer restricted to geometrical designs because the mechanically-controlled carrier stops have been replaced by more versatile electronic controls.

Skechers EX1050
Skechers v Nike

18.3 Flat machine gauges

Flat machines (Fig. 8.2) are normally gauged on the *English system* (*E*) of *needles per inch* (npi). The *Metric system*, which is based on the distance in tenths of a millimetre from the centre of one needle to the next, is rarely used. The latter is a direct system, with a higher gauge number indicating a coarser gauge – the opposite of the English system.

Generally, flat machine gauges range from E 5 to E 14, with the main gauges being 5, 7 and 10, but there are machines as coarse as E $2\frac{1}{2}$ and as fine as E 18 or even finer now being built.

NB: All flat machines can be *half-gauged* by removing every alternate needle; thus, an E 10 gauge machine will become an E 5 gauge. Also, different needle hook sizes are available, and gauge conversion by changing needle beds is possible.

18.4 Conversion from Cottons Patent to V-bed gauge

To convert from Cottons Patent gauge (G*, needles per $1\frac{1}{2}$ inch) to V-bed gauge (E, needles per inch)

1 Convert from $1\frac{1}{2}$ inches to 1 inch needle bed width.
2 In the gauge range G9 and below, reduce the resultant E gauge by 1. Above G 9 reduce the resultant E gauge by 2. This is to fit commercial practice in flat knitting, where a slightly coarser gauge is preferred.

Example: Convert G9 and G21 fully-fashioned (needles per $1\frac{1}{2}$ inches) to V-bed flat E gauge (npi)

$$G9 \times 2/3 = 6$$

$$6 - 1 = E5$$

$$G21 \times 2/3 = 14$$

$$14 - 2 = E12$$

18.5 Knitting widths

Strapping machine needle bed widths tend to range from about 14 to 50 cm (5.5–20 inches); hand-operated garment-width machines range from about 80 to 120 cm (31–47 inches); power-driven automatic garment length machines range approximately in width from about 66 cm to 240 cm (26–95 inches).

Wider '*blanket width*' machines are approximately 244 cm (96 inches) wide, to knit unshaped garment pieces for cut-and-sew knitwear.

Narrow bed '*compact*' machines are approximately 127 cm (50 inches) wide for fashion shaped knitwear.

For *integral garment* knitting, the approximate width is 183 cm (72 inches).

* 'G' is sometimes expressed as 'gge'. For example, G 9 = 9 gge.

Skechers EX1050
Skechers v Nike

18.6 Yarn counts

An indication of an approximately suitable count for a flat machine may be calculated using the formula:

$$\text{worsted count (NeK)} = \text{gauge}^2/9$$

The following are typical NeK count ranges for particular E gauges:

12 npi – 2/26's to 2/42's
8 npi – 2/14's to 2/22's
5 npi – 6/14's to 6/18's
2 npi – 8/7's to 8/9's

It can be seen that a characteristic of the flat machine is the large number of ends of yarn that may be knitted at the same time. However, if light-weight structures are required, the number of ends may be much fewer (See multi gauges, Chapter 19).

18.7 Simple hand-manipulated V-bed rib flat machines

Figure 18.1 shows a cross-section of a simple hand-powered and manipulated V-bed rib flat machine. The trick walls are replaced at the needle bed verges by fixed, thinner, polished and specially shaped *knock-over bit edges*. In rib gating, a knock-over bit in one bed will be aligned opposite to a needle trick in the other bed. During knitting, the edges of the knock-over bits restrain the sinker loops as they pass between the needles and thus assist in the knocking-over of the old loops and in the formation of the new loops. The takedown tension and the needles in the other bed help to hold the old loops down on the needle stems as the needles rise to clear. Many modern electronic flat machines have movable knock-over and holding-down elements, which assists in the knitting of shaped and single-bed structures.

On hand flat machines, after the first or *set-up course* of rib is taken by the needles, a *fabric comb* is hand-inserted into it, upwards from under the needle beds, so that the eyelet holes of the comb protrude above the course. The comb wire is then inserted through the eyelets, over the set-up course, so that the comb is suspended from the course, and a takedown weight is attached to it.

The *cover plate* is a thin metal blade, located in a slot across the top of the needle bed tricks. It prevents the stems of the needles from pivoting upwards out of the tricks as a result of the fabric take-down tension drawing the needle hooks downwards, whilst allowing the needles to slide freely in their tricks. The plate can be withdrawn sideways out of the needle bed to allow damaged needles to be replaced.

Supporting the tail of each needle is a *security spring* that fits over the lower edge of the needle bed. When the spring is pushed fully into position, it locates into a groove on the under-surface of the needle bed. The butt of the needle that it supports is then aligned with the knitting cam track on the under-surface of the traversing cam-carriage. When a needle is not required to be in action, its security spring is not located in the groove, so that the needle is nearer to the lower edge of the needle bed and its butt misses the traversing cam-carriage.

On machines employing jacquard selection, the function of the security spring is replaced either by the thrust of a jacquard steel onto the tails of the elements or by

Skechers EX1050
Skechers v Nike

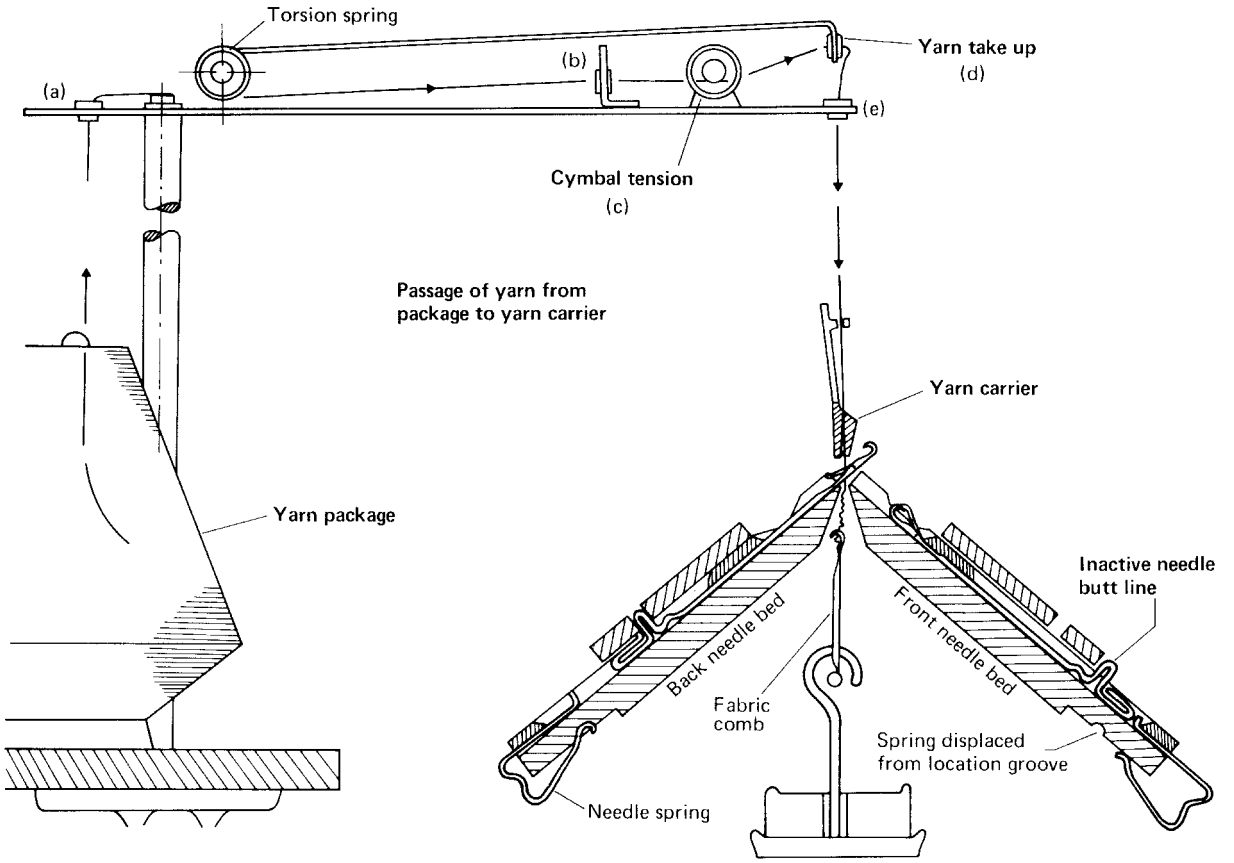

Fig. 18.1 Passage of yarn from package to yarn carrier.

Skechers EX1050
Skechers v Nike

the raising or depressing of the knitting butts into the tricks, in order to position the needle butts for each carriage traverse.

Latch opening brushes are attached to the cam-plates of both needle beds to ensure that the needle latches are fully opened. The supports of the brushes are adjustable to ensure precise setting of the bristles relative to the needles.

The cam-carriage either slides, or runs on ball-bearings or wheels, along *guide rails*, one of which is fixed over the lower end of each needle bed. It is propelled either by hand or from a motor-driven continuous roller chain or rubber belt.

Each *yarn carrier* is attached to a block which slides along a bar, which, like the carriage guide rails, passes across the full width of the machine. The carrier bar may be of the double prism type so that yarn carriers may be attached to slide along both the front and the back surfaces. The yarn carriers are picked up or left behind by the carriage, as required, by means of driving bolts or pistons that are attached to, and controlled either manually or automatically from, the carriage bow. There is a bolt for each carrier bar track that, when lowered, entrains with a groove in the shoulder of a yarn carrier block. Stop plates having inclined edges are positioned on the carrier bars at the knitting selvedges. On contact with a stop plate, the base of the bolt rises and is lifted out and disconnected from the groove of the carrier block so that the carriage continues its traverse without that carrier.

Two levers are usually provided, one at each end of the needle bed. One is for *racking the back needle bed*, to change the gating of the needle beds for changes of rib set-out or rib loop transfer. The other is to *open the gap* between the needle beds for easier access to the knitted fabric hanging from the needles.

18.7.1 The cam system of the V-bed hand flat machine

Figure 18.2 illustrates the knitting action of a V-bed hand flat machine and Fig. 18.3 shows the underside of the cam-carriage and the cams forming the tracks that guide the needle butts through the knitting system. The single knitting system cam-box is symmetrically designed for knitting a course of loops on both the front bed and back bed needles during a right-to-left traverse and a second course during the return left-to-right cam box traverse.

The needle butts will enter the traversing cam system from the right during a left-to-right carriage traverse and from the left during a right-to-left traverse. For each needle bed there are two raising cams (R), two cardigan cams (C) and two stitch cams (S).

In the direction of traverse, the leading raising cam is responsible for knitting and the trailing raising cam acts as a guard cam. The leading stitch cam is raised out of action and the trailing stitch cam is in operation. In the reverse direction of traverse, the roles of the two raising cams and of the two stitch cams are reversed.

A raising cam lifts the needle to tuck height, but if the cardigan cam above it is in action the needle is lifted to full clearing height. Thus, the cardigan cam is taken out of action if a tuck stitch is required. To produce a miss stitch, both the raising cam and the cardigan cam are out of action. To produce a course of tubular plain knitting, a pair of raising cams that are diagonally opposite each other in each bed (RL and RR) are out of action.

The arrangement as shown in Fig. 18.3 is referred to as a *knitting system*. A *single system* machine will knit one course of rib in one traverse whereas a *double system* machine will knit two courses of rib per traverse. Sometimes a set of cams in one bed is referred to as a *lock*.

Skechers EX1050
Skechers v Nike

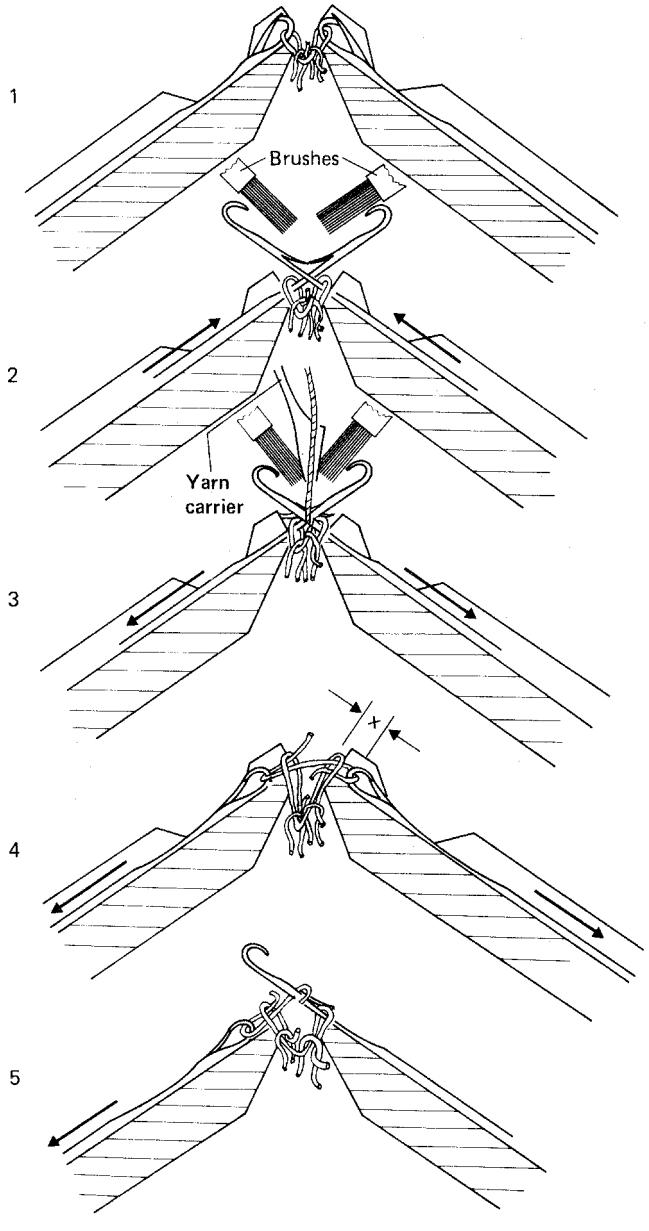

Fig. 18.2 Knitting action of V-bed flat machine.

18.7.2 The knitting action of the V-bed hand flat machine

Numbers 1 to 4 below correspond to the numbers in the knitting action illustrations (Fig. 18.2), assuming a carriage traverse from left-to-right. Similar positions may be plotted for the return traverse, using the cams given an (L) designation to provide the positive movements.

1 *The rest position*. The tops of the heads of the needles are level with the edge of the knock-over bits. The butts of the needles assume a straight line until

Skechers EX1050
Skechers v Nike

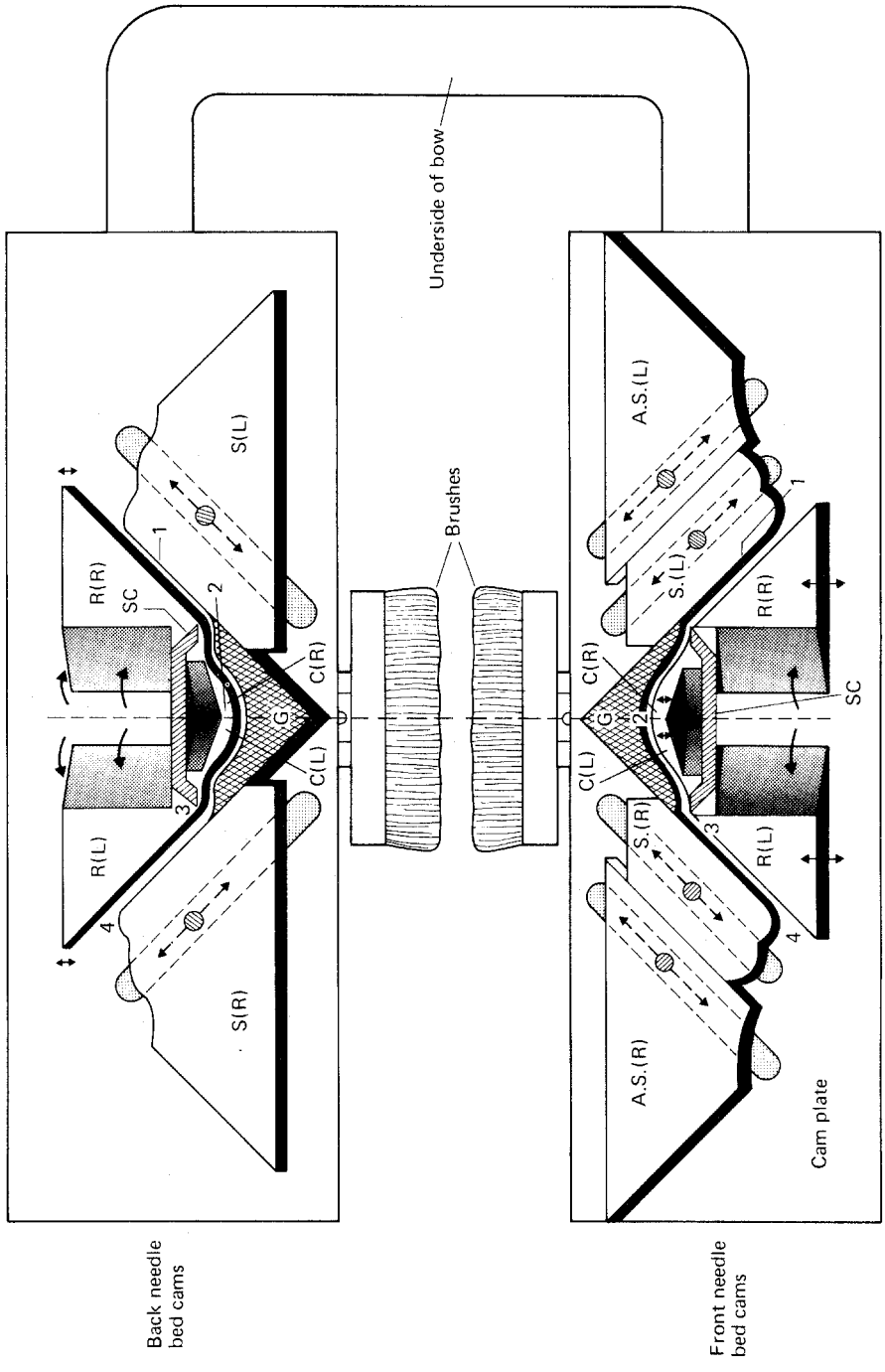

Fig. 18.3 Cam system of simple hand flat.

Skechers EX1050
Skechers v Nike

contacting the raising cams R (R) because the leading stitch cams S and AS (L) are lifted to an inactive position. The lifting action is an *alternating action* that always lowers the trailing stitch cams and raises the leading stitch cams in each system as the traverse commences. This action prevents needles from being unnecessarily lowered and a strain being placed on the old loops prior to the start-up of the knitting action.

2 *Clearing.* The needle butts are lifted as they contact the leading edge of cams R (R), which raises the needles to 'tucking in the hook' height with the under-surface of cams S (L) acting as guard cams. The needles are lifted to full clearing height as their butts pass over the top of cardigan cams C (R) and C (L).

3 *Yarn feeding.* The yarn is fed as the needles descend under the control of guard cam (G). The required loop length is drawn by each needle as it descends the stitch cam S (R).

4 *Knocking-over.* To produce *synchronised knocking-over* of both needle beds simultaneously, the stitch cam S (R) in the front system is set lower than the auxiliary stitch cam AS (R), so that the latter is rendered ineffective. If, however, *delayed timing of the knock-over* is employed, knock-over in the front bed will occur after knock-over in the back bed. In this case, stitch cam S (R) is not set as low as AS (R) (Number 5 in Fig. 18.2) so that the depth setting of the latter cam produces the knock-over action. Delayed timing is only normally used on gauges finer than 8 npi and cannot be used for broad ribs.

18.8 Stitch cam settings

The stitch cams are located in slots by studs and they may be raised or lowered to a different setting position by moving the stud along the slot (Fig. 18.3). Unless the rate of yarn feed is controlled, the setting of the stitch cam at knock-over will determine the *stitch length* because it controls the distance the head of the needle descends below the knock-over bit edge from the rest position. The alternating stitch cam settings are indicated by pointers on a calibrated scale on the outside of the cam-plate.

On hand flats, the adjustment of the settings is obtained by hand controls, whilst on modern electronically-controlled flats, each stitch cam is raised and lowered by its own *step motor*, so a wide range of stitch lengths can be achieved during the knitting of a garment.

18.9 Spring-loaded cams

Raising cams (R) and cardigan cams (C) (Fig. 18.3) are of the spring-loaded type that can be depressed into the under-surface of the cam-plate against the action of a spring. The leading edge of a leading raising cam is straight so that it causes the butts to follow its profile. However, the trailing inner edge of the cam, which is the leading edge when that cam is trailing, has a gently sloping edge. Needle butts deliberately not raised by the leading cam thus ride up the trailing cam, depressing the cam into the cam-plate and then follow an undisturbed path across its face. After the butts have passed, the cam springs outwards from the cam-plate to resume its active position for the return traverse.

Skechers EX1050
Skechers v Nike

On hand flat machines, the cams are often of the sinkable setting type so that they can be set either:

1 *fully in action* out from the cam plate so that they act on every needle butt,
2 *partly withdrawn* into the cam-plate so that they miss the low (short) butts, which pass undisturbed across their surface, or
3 *fully withdrawn* into the cam-plate so that all butts pass undisturbed across their surface.

The standard set-out when using different lengths of butts is two long and one short in each bed, with the short butt centred between the two long butts in the opposite bed. This enables changes from 1×1 to 2×2 rib knitting to occur.

Changes of cam settings are achieved by the movement of controls that are placed on the outside of the cam-plate. In the case of mechanical automatic power flats, these controls can consist of metal push slides, each corresponding to a different cam whose sideways movement produces the required change of cam setting. At each end of the machine is a contact post containing striking plates, aligned to contact the slides as the carriage reaches the end of its traverse so that the cams may be set for the return traverse. Control of the plates is achieved from the main garment (machine) control of the machine.

Electronic machines have continuous electronic contact with the cam carriage and therefore do not require the cam slide arrangement.

On hand flat machines it is useful to have split cardigan cams so that a different setting can be achieved in each direction without having to stop the carriage at the end of each traverse.

The automatic machine can change the cam settings for each traverse; split cardigan camming is unnecessary and these machines usually have a single cardigan cam for both traverse directions.

18.10 Two or more cam systems

Although hand flat machines have single cam system carriages, many automatic power flat machines have two, three or four cam systems, each with a complete set of knitting cams arranged side by side in the same cam-plate each working with a separate yarn carrier. Thus, in one cam carriage traverse, as many courses as there are cam systems can be knitted.

However, compared with a single system machine, the rate of carriage traverse is often reduced, firstly because of the heavier carriage, and secondly because it is longer and must traverse further, thus making the machine longer. There is also a problem of vertical floating threads at the selvedge edges of the fabric. Compact cam design and machine construction, together with the use of lightweight alloys and automatic thread cutters, have largely overcome these problems.

18.11 Split cam-carriages

Another useful development is the *split cam-carriage*. For example, a double system cam carriage operating across the full width might also be split into two single system (2×1) cam-carriages, each covering half the needle bed or both co-

Skechers EX1050
Skechers v Nike

operating in the knitting of wedge-shaped or other complex designs. Split cam-carriage machines have been built with a total of two (2 × 1), four (2 × 2), six (2 × 3), and even eight (2 × 4) systems.

18.12 Direct and indirect yarn feed

On mechanically-controlled flats, it is necessary to join the front and back needle bed cam-plates with a *bow* or *bridge* in order to drive the cam-carriage as a single unit. However, the traversing bow necessitates an unbalanced diversion of the yarn path down to the needles. This in turn produces unbalanced yarn tension, depending on whether the cam carriage is traversing towards or away from its yarn supply.

On some of the latest electronically-controlled power flats, the bow has been eliminated by driving the front and back needle bed cam-plates separately but in unison, thus giving the cam carriage an open construction. Additionally, the yarn carriers are no longer mechanically connected to the cam-carriage and are each individually driven. They need not be synchronised with the carriage traverse. A yarn carrier can be selected either for knitting, plating or laying-in. Precise placing is achieved both for selvedge shaping and intarsia, where swing yarn carriers are no longer needed (Chapter 19, *Tsudakoma*).

Direct yarn feed is often used on hand flat machines as it allows weak yarns to be knitted because the yarn is supplied directly down from the centrally-positioned yarn tensioner to the reciprocating yarn carrier, so that the tension is kept fairly constant at a minimum level. With this arrangement, the carrier must always remain on one side of the carriage bow, for example on the right, and not pass underneath it, as the yarn path would be disturbed. Yarn carriers can therefore only be collected and left by the carriage at the right side of the machine so that only double course striping can be produced. The pick-up device for the yarn carrier is located on the outside of the low bow.

Indirect yarn feed is used on power flat machines, and is characterised by a high carriage bow passing over the carrier bars, with the yarn path parallel to them, from guide eyes at the end of the machine to the yarn carriers. The yarn is deflected in its downward path from the yarn tensioners across to the guide eyes, thus increasing the tension on the yarn and tending to cause fluctuations depending upon whether the carrier is traversing away from, or towards, the yarn guide eye end of the machine. However, it does enable the yarn carrier to be picked up or left on either side of the machine, using plungers that operate down onto the carrier blocks from the underside of the carriage bow.

18.13 Yarn carrier arrangement

The yarn carriers are arranged to slide on both sides of double prismatic guiding bars and there are usually six or seven carriers operating on two or three double bars. When two carriers operate on the same track of the same bar, it is essential to arrange the sequence so that if the two carriers are deposited on the same side, the one nearest to the cam-carriage will be the one first required to traverse back in the opposite direction.

There are two methods of entraining carriers with cam systems on double system

Skechers EX1050
Skechers v Nike

machines: uncrossed and crossed. With the *uncrossed* arrangement, the same yarn carriers operate with the same cam systems in both directions of traverse. This simplifies the control and is essential when two carriers are on the same track, but it causes problems with vertical yarn floats at the selvedges because the yarn with the leading cam system will finish the first course but will not knit the return traverse.

With the *crossed* arrangement, one yarn carrier will always be entrained with the leading cam system and the other with the trailing cam system, so that if the carriers have different coloured yarns, each will knit alternate courses.

In carrier positioning and traversing for jacquard (Fig. 18.4), the yarn carriers

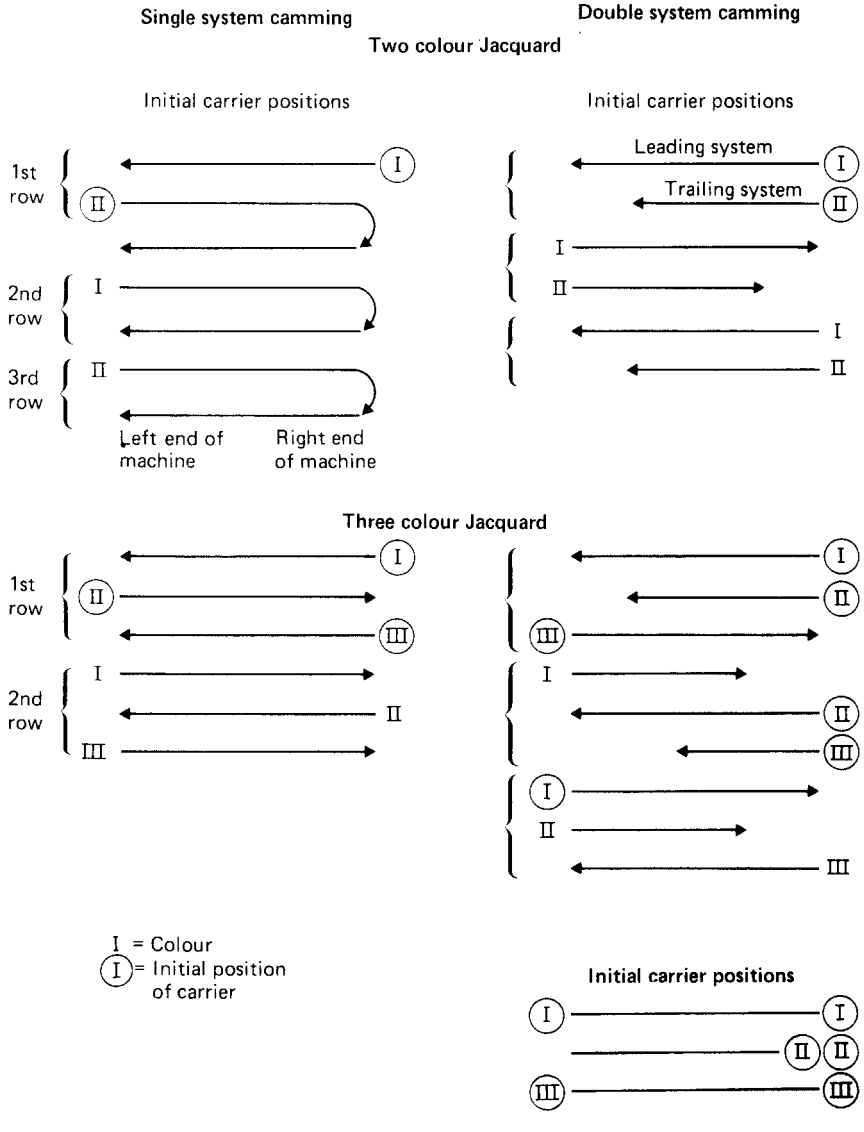

Fig. 18.4 Yarn carrier positioning.

Skechers EX1050
Skechers v Nike

must be carefully positioned initially in order to keep their number to a minimum whilst ensuring that empty traverses (without knitting a course) are avoided whenever possible, as they reduce productivity. By drawing a plan of traverses and colours, and indicating each time a new yarn is picked-up, the initial positions can soon be established. For double system knitting in two- or three-colour jacquard, each system will require as many carriers as there are colours, but two carriers of the same colour can use the same track. Only in the case of single-system two colour jacquard is it necessary to alter the sequence of coloured courses. This is because, after their first course, each colour is knitted at two consecutive courses.

18.14 Typical structures knitted on flat machines

Cardigan stitches are two-course repeat tuck rib knitwear structures, widely used in the body sections of heavy-weight stitch-shaped sweaters. The tuck stitches cause the rib wales to gape apart so that the body width spreads outwards to a greater extent than the rib border. The tuck loops increase the fabric thickness and make it heavier in weight and bulkier in handle, although the rate of production in rows of loops will be less than for normal 1×1 or 2×2 rib. The greater the proportion of tuck to cleared loops, the heavier and wider the finished relaxed structure (see Fig. 16.13).

In the production of a knitted stitch, the leading raising and cardigan cams for that bed and direction of traverse must be in action, whilst for a tuck stitch, the raising cams remain in action but the cardigan cam is taken out of action. It is important to arrange the camming for the needle beds so that, at the start of the traverse when tucking, the first needle is tucking and the last needle in action is in the opposite bed and is thus knitting. If the last needle is tucking, the selvedge tuck loop will withdraw from the needle hook as the reverse traverse commences.

Half-cardigan or *royal rib* (Fig. 18.5) is produced on a 1×1 rib base, having tuck loops on one bed only at alternate courses. It is therefore an unbalanced structure with a different appearance on each side and with twice as many cleared loop courses per unit length on the all-knit side as on the tuck loop side. On the all-knit

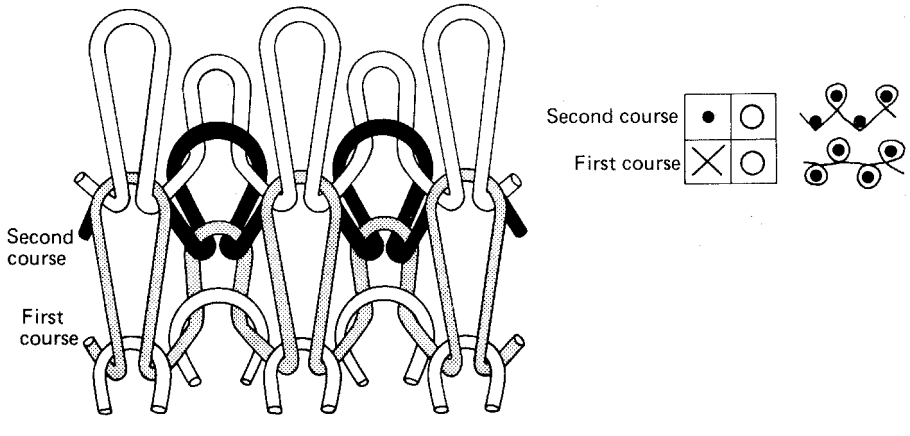

Fig. 18.5 Half-cardigan loop structure.

Skechers EX1050
Skechers v Nike

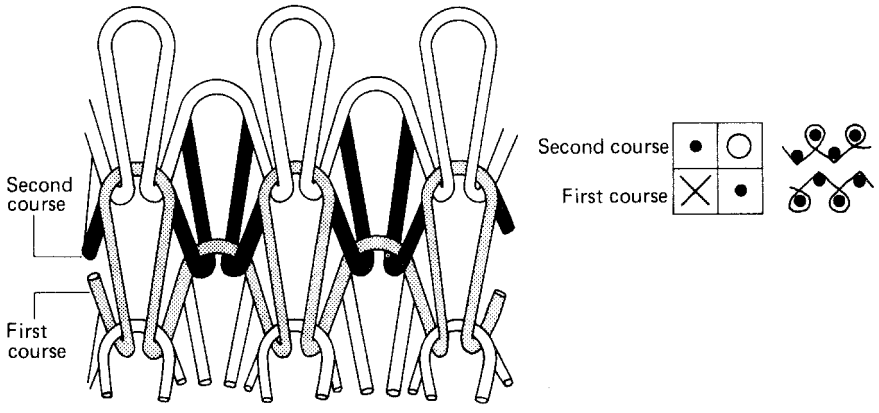

Fig. 18.6 Full cardigan.

side, one course of loops has very large and rounded loops. This is because they receive yarn from the tuck loops on the other side. The other course of loops on this side has, in contrast, extremely small and insignificant loops because they are robbed of yarn by the elongated held loops on the other side, which consists only of held loops as the tuck loops lie behind them.

A two-tuck variation of half-cardigan, based on a four course repeat with each repeat sequence repeated at two consecutive courses, is useful as it produces rounded loops on the knit side as a result of yarn passing into it from the second tuck course.

Full-cardigan or *polka rib* (Fig. 18.6) consists of one course of loops knitted on the front bed and tucks on the back, and the second course with the sequence reversed, thus producing a balanced 1×1 tuck rib structure with the same appearance on both sides. If different coloured yarns are knitted at alternate courses, a '*shot rib*' will be produced which in the relaxed state will show one colour on one side and the second colour on the opposite side.

In open width, a 1×1 rib fabric will relax by about 30 per cent, half-cardigan by only 5 per cent, and full-cardigan will show no width shrinkage compared with its original knitting width.

To knit half-cardigan on a single-system hand-flat, one of the four cardigan cams is taken out of action so that in one direction of traverse a tuck stitch will be knitted on one needle bed only.

To knit full-cardigan, diagonally opposite pairs of cardigan cams are taken out of action so that in one direction of traverse the front needle bed will tuck and in the return traverse the back needle bed will tuck.

The 2×2 rib version of half-cardigan is termed *fisherman's rib* and the full-cardigan version is termed the *sweater stitch*.

18.14.1 Racked rib structures

The V-bed flat machine is capable of knitting a unique range of racked rib structures (Fig. 18.7), based on the facility of racking one needle bed by one or more needle tricks past the other needle bed, either towards the right or the left as and when required. Usually, the needle set-out is 1×1 rib, or a modified version with

Skechers EX1050
Skechers v Nike

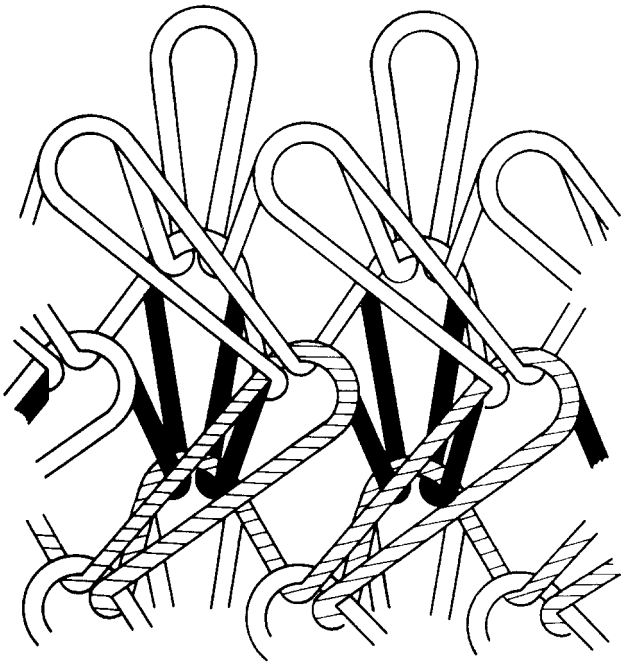

Fig. 18.7 Racked rib.

selected needles taken out of action, and a knitting sequence of half- or full-cardigan [1].

The *basic principles of racked rib structures* are as follows:

1 A loop on a needle in one bed must be racked past a loop from the same course on a needle in the other bed. The structure must therefore be rib based.
2 After an all-knit course of 1×1 rib, the 45 degree angle of inclination of a single needle rack would be shared by the loops in both beds and the appearance would be insignificant. A two-needle rack is thus required.
3 After a course with tucking on one bed and knitting on the other, a single-needle rack will produce a 45 degree inclination on the knitted loop side, irrespective of which needle bed was racked (Fig. 18.7). The open legs of the tuck loops resist the effect of racking so the tension only inclines the knitted loop side of the course. Half- or full-cardigan sequences (Figures 18.5 and 18.6), which consist of courses of knitted loops on one bed and tuck loops on the other, are thus an ideal base for racked structures.
4 With half-cardigan, racking can occur only after every alternate course of the two-course repeat – it cannot occur after the 1×1 rib knitting course. The racked effect will show only on one side of the fabric – the all knitted loop side – at every second row. In-between the racked loop courses, the 1×1 rib courses will appear as minute upright loops on the effect side.
5 In the full-cardigan sequence, every course has tucks on one bed and knitted loops on the other, so that racking can occur after every course. The racked loops will appear on one side of the fabric at the first rack and on the other side at the next, always on the side remote from the tuck loops of that course.

Skechers EX1050
Skechers v Nike

Racked loops can be produced at every row of knitted loops on each side of the fabric because the tuck loops are hidden inside the structure.

6 In a full-cardigan sequence, if racking occurs to the left at the first course and to the right at the second course, all loops will be racked in the same direction on both sides of the fabric. This is because racking knitted loops to the right produces the same direction of inclined loops as racking the tuck stitches to the left. If the colour of the yarn is changed at fixed intervals of courses and the fabric is cut in rectangular pieces at right angles to the inclined selvedges, diagonal rather than horizontal stripes will be produced relative to the selvedge.

7 If in a full-cardigan sequence racking occurs in the same direction at two successive courses and is followed by two racks in the opposite direction at successive courses, alternate courses on each side of the fabric will show loops inclined in opposite directions.

8 A *Vandyke* or *zigzag selvedge edge* will be produced if the principles explained in 6 and 7 are combined. *Example*: 16 courses might be knitted with a rack to the right after every odd course and a rack to the left after every even course. This is then followed by a course without a rack so that the racking sequence recommences out of phase producing inclined loops in the opposite direction for a further 16 courses before the next no-rack course completes the repeat of the design. On each side of the fabric, courses will incline in one direction for 8 face rows before the inclination is reversed. Every 16 face rows there will be one row of small insignificant upright loops that alternates on one side and then on the other.

9 Racked loops are produced only if a needle in one bed racks past a needle in the other bed. If a needle racks past an empty trick (because the needle in the other bed has been removed or is out of action) there will be no inclined loop in that wale.

10 A pattern repeat of racked and straight wales can be produced across one side of a full-cardigan fabric. It is knitted with a needle-out sequence with racking to the right after every second course and to the left after the next two-course sequence. With this arrangement, a needle racked to the right and later to the left past a tuck loop on a needle in the other bed, will produce a wale of inclined loops whereas a needle racked to the right and left past an empty needle trick will produce a wale of upright loops. The sequence can be interrupted by making two successive racks in the same direction before continuing the previous sequence. The needle that was racked past the tuck will now be racking past an empty trick, so its wale changes from inclined to upright loops, whereas the needle previously racked past an empty needle is now racking past a tuck loop, so the loops in its wale are no longer upright but inclined. The changeover in either direction can be achieved whenever required.

11 The racked effect is more prominent if the wales are spaced further apart by *half-gauging*, i.e. removing every alternate needle from each bed before arranging the needle set-out.

18.14.2 Knop structures

Knop fabrics are relief structures in rib where successive tuck stitches on all the needles or certain needles of one bed produce a three-dimensional effect. Some-

Skechers EX1050
Skechers v Nike

times the all-knit courses are produced in a different colour and sometimes racking occurs after the knop sequence so that the next knop is off-set.

18.14.3 The cable stitch

Cable stitch is a traditional hand-knitted stitch pattern incorporated into fishermen's sweaters in the islands of Jersey, Guernsey and particularly Aran, where it is one of a range of stitch patterns (Fig. 18.8) that includes *ladder*, *blackberry stitch* and *honeycomb* [2]. Traditionally, the yarn is partly-scoured wool in its ecru (undyed and unbleached) colour. The cable stitch is a three-dimensional design of cords of face loop wales, centred in a panel of reverse loop stitches bordered on either side by rib wales of face stitches. Each cord is usually three wales wide; these move as a unit when they are crossed (twisted) over another cord. The direction of twist of the cords is always the same relative to the surface of the design.

Cables are normally either two-cord or three-cord. In machine knitting, the cords are knitted on one needle bed and the background panel on the other. The cable loops are longer to reduce the tension where cords twist. At this point, the loops of

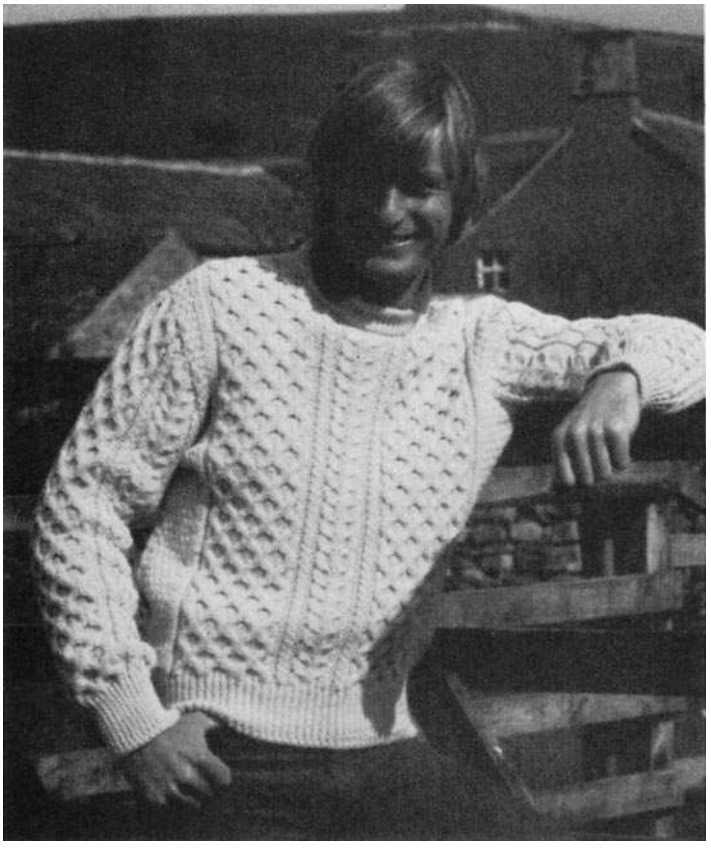

Fig. 18.8 Aran crew-neck pullover knitted by T W Kempton on a 5-gauge JDR flat machine from 2/6's worsted count woollen spun yarn [British Wool Marketing Board/Marks and Spencer].

Skechers EX1050
Skechers v Nike

one cord are transferred over to the other bed so that the two cords can be racked past each other before they are transferred back to recommence knitting. Cable stitches are knitted on some automatic flat rib and purl machines, as well as on a few double-cylinder machines with the facility for shogging the top cylinder. Generally, double-cylinder machines knit only mock cable effects using purl stitch designs.

References

1. LANCASHIRE, J. B., Racked ribs/focus on racked rib fabrics, *Hos. Trade J.*, (1958), May, 66–9; (1969), Dec., 80–4.
2. LANCASHIRE, J. B., The cable stitch, *Hos. Trade J.*, (1959), Oct., 96–100.

Further information

ANON., *Flat Machines*, (1979), ITF Maille, France.
ANON., *The Dubied Knitting Manual*, (1967), Edouard Dubied et Cie, Neuchatel, France.
LANCASHIRE, J. B., *Hos. Trade J.*, The versatility of flat frame knitting, (1956), Aug., 58–62. Fancy trimmings for outerwear, (1955), Feb., 72–4. V-type strapping and stollings, (1970), April, 74–7.
WEBER, K. P., Theory of knitting (part 2), *Knit. Times*, (1975), 14 April, 141–163.

Skechers EX1050
Skechers v Nike

19

Automatic power flat knitting

19.1 History

In 1867, *Henri Edouard Dubied* acquired the European rights for Lamb's machine (see Section 18) during the Paris Exhibition and established his knitting machine building company. Similarly, in 1873, *Heinrich Stoll*, a German engineer, began to build and repair Lamb machines and by the early 1890s he was not only building improved versions of the rib machine but also flat bed purl machines of a similar standard of perfection [1–3]. The company founded by Stoll continues to play an important part in the development of flat knitting machinery including: –

- 1926, the first motor-driven jacquard flat machine.
- 1975, the first fully-electronic flat machine.
- 1987, the first of the CMS series machines.

In the 1960s, the Japanese company *Shima Seiki* under its president *Masahiro Shima*, pioneered the development of the automatic V-bed seamless glove-knitting machine. Experience gained in that field has been applied to the development of a comprehensive range of electronic V-bed flat machines, including the very latest techniques for knitting whole garments. CAD systems have also been up-graded and refined to complement developments in knitting technology.

19.2 The MacQueen concept

In the early 1960s, *Kenneth MacQueen* unsuccessfully attempted to develop a revolutionary electronic computer-controlled V-bed flat machine having compound needles [4]. The idea was to use the Basque beret technique of knitting wedge-shaped garment parts in a sideways manner with held loops, part course knitting, and sections separated by waste yarn segments.

The machine was to use a variable carriage traverse, magnetically-energised raising cams to lift the needle butts, tape control for the design selection and

Skechers EX1050
Skechers v Nike

garment sequence, with centralised computer control of up to six 'slave machines'. Although MacQueen's concept failed through being too ambitious, the advent of micro-electronic technology, computer programming, and major advances in shaping techniques have enabled the major part of his far-sighted dream to be realised.

19.3 Power flat machines

The basic principles of V-bed flat knitting have already been outlined in Chapter 18. The main difference between the simple hand-controlled flat and the automatic power flat is that the latter can be programmed to automatically knit a garment length sequence with little or no further human intervention. The term *flat bar* or *power flat* has been retained as the generic name for both rib and purl flat machines. Both types originally were designed to knit garment-length blanks of constant width for cut-and-sew knitwear.

19.4 The versatility of V-bed power flat knitting

As the facilities of the mechanically-controlled V-bed flat machine improved, its patterning versatility became such that it could not be equalled:

- It was able to knit rib or plain garment panels in jacquard, racked stitches, rib loop transfer, links-links, cable stitch, needle-out, and relief designs.
- Jacquard steels provided individual needle selection across the whole needle bed (with the possibility of selection on the back as well as on the front needle bed).

However, in cut-and-sew knitwear it faced competition from the less versatile but more highly-productive circular garment-length knitting machines. Additionally, in the production of classic, plain, fully-fashioned knitwear it was unable to challenge the shaping facilities of the straight bar frame.

Over the last thirty years, many innovations and refinements in knitting technology have gradually evolved and combined to transform the mechanically-controlled V-bed machine into a computer-controlled, highly efficient and versatile knitting machine, not only for cut-and-sew knitwear but also for integrally-shaped panels and whole garments.

In this process of evolution it has rendered the flat bed links-links machine superfluous, blunted the productive challenge of the circular garment-length machines, surpassed the straight bar frame in shaping potential both in types of shapes and knitted structures, and has extended its own gauge range capabilities. Its biggest challenge occurs when fashion swings away from knitwear to tee shirts and sweatshirts cut from jersey fabric.

19.5 Electronic controls replace mechanical controls

The electronically-controlled power flat machine offers quick response to size, style and pattern changes with versatile and infinitely variable adjustment of its electronically-controlled functions under the guidance of the main computer soft-

Skechers EX1050
Skechers v Nike

ware programme and the back-up support of its memory. It is therefore more able to efficiently meet the exacting requirements for knitting shaped garments [5].

In contrast, the mechanically-controlled power flat machine is time-consuming and costly during machine changes and its more limited facilities provide less scope for adjustment.

19.6 The garment sequence programme

The garment sequencing programme is the most important requirement of a garment-knitting machine because it has overall control of the functioning of the machine whose automatic operation follows the specified programme.

On mechanically-controlled power flats, it is the pasteboard movement-card mechanism that provides the programme controlling and co-ordinating the machine's functions throughout the garment-length knitting sequence.

The positions of holes punched in the cards determine movement functions such as yarn carrier selection, positioning of knitting cams, needle bed racking, and overall control of the jacquard mechanism.

The cards are expensive and time-consuming to assemble, shaping programmes would require many extra cards and sequential knitting would require the equivalent of four programmes – for the front, back and two sleeves.

19.7 Mechanical jacquard selection

Figure 19.1 illustrates the arrangement of elements in the needle bed of a machine having full mechanical selection. A separately-controlled arrangement may also be available on the other needle bed. In the tricks beneath each needle are selectors (two in the case of the double-cam system machine) whose tails are supported by a jacquard steel that extends across the full width of the needle bed.

There is a possible punched-hole position for each selector on every jacquard steel. The steels are hinged together to form an endless 'chain loop' which passes over the prism. The prism can turn whilst the cam-carriage is clear of the needle bed at the end of its traverse. This brings another steel onto its upper surface and thrusts it upward into contact with the protruding tails of the selectors. This produces a simultaneous selection at every needle trick, ready for the next carriage traverse. The prism can dwell to repeat a selection, or rack forwards or backwards by one or two positions.

An unpunched portion in a steel causes the corresponding selector to be pushed upwards in its trick, aligning its butt with a raising cam in the cam-carriage so that eventually the needle above it will be lifted, possibly to knit. A punched hole allows the selector tail to sink into the groove of the prism and thus be unaffected by the thrust of the prism so that its needle is left at an inactive level.

19.8 The Shima Seiki electronic selection system

Figure 19.2 illustrates the front (F) and back bed (B) cam systems of a *Shima Seiki* two (knitting) system model SEC. It is indicated that the cam carriage is traversing

Skechers EX1050
Skechers v Nike

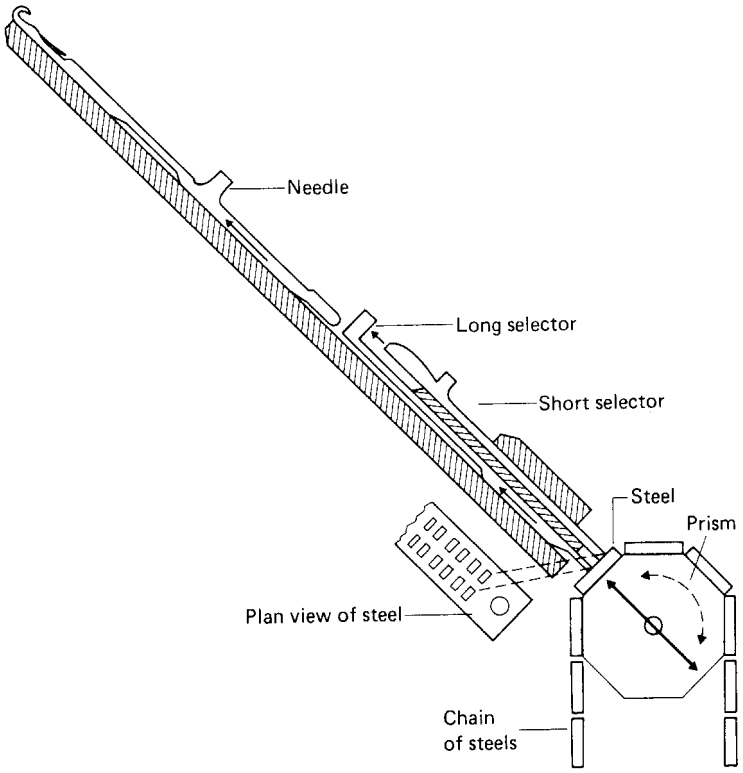

Fig. 19.1 Mechanical jacquard selection on a V-bed flat machine.

from right-to-left so that the butts of the knitting elements enter from the left, passing through four systems:

1 From the left, the first system is transferring loops from the back bed to the front bed. '4' is a loop transfer cam and '6' is a loop receiving cam.
2,3 The next two systems contain knitting cams, '2' being clearing cams and '3' being stitch cams.
4 Finally, the right system is transferring loops from the front bed to the back bed. Delivering cam '5' is introduced to raise butts onto transfer cam '4'.

The *Shima* model SES provides the same facilities but with only two systems, each of which contains full camming for knitting and two-way transferring; this virtually halves the width of the cam-box.

Figure 19.3 illustrates the arrangement of elements in one needle bed, e.g. the front bed; the back bed has an identical arrangement.

Latch needle (a) has a spring clip for rib loop transfer.

Needle jack (b) is pivotally connected to the needle and provides the single position knitting butt that can be selected to follow the raising cam (2) (Fig. 19.4) profile, lifting the needle from miss to tuck or knit.

When the tail of the needle jack is depressed by the head of the re-positionable *presser jack* (c), the knitting butt is sunk out of contact with the raising cam (2) and the needle remains at the height it has already reached.

Skechers EX1050
Skechers v Nike

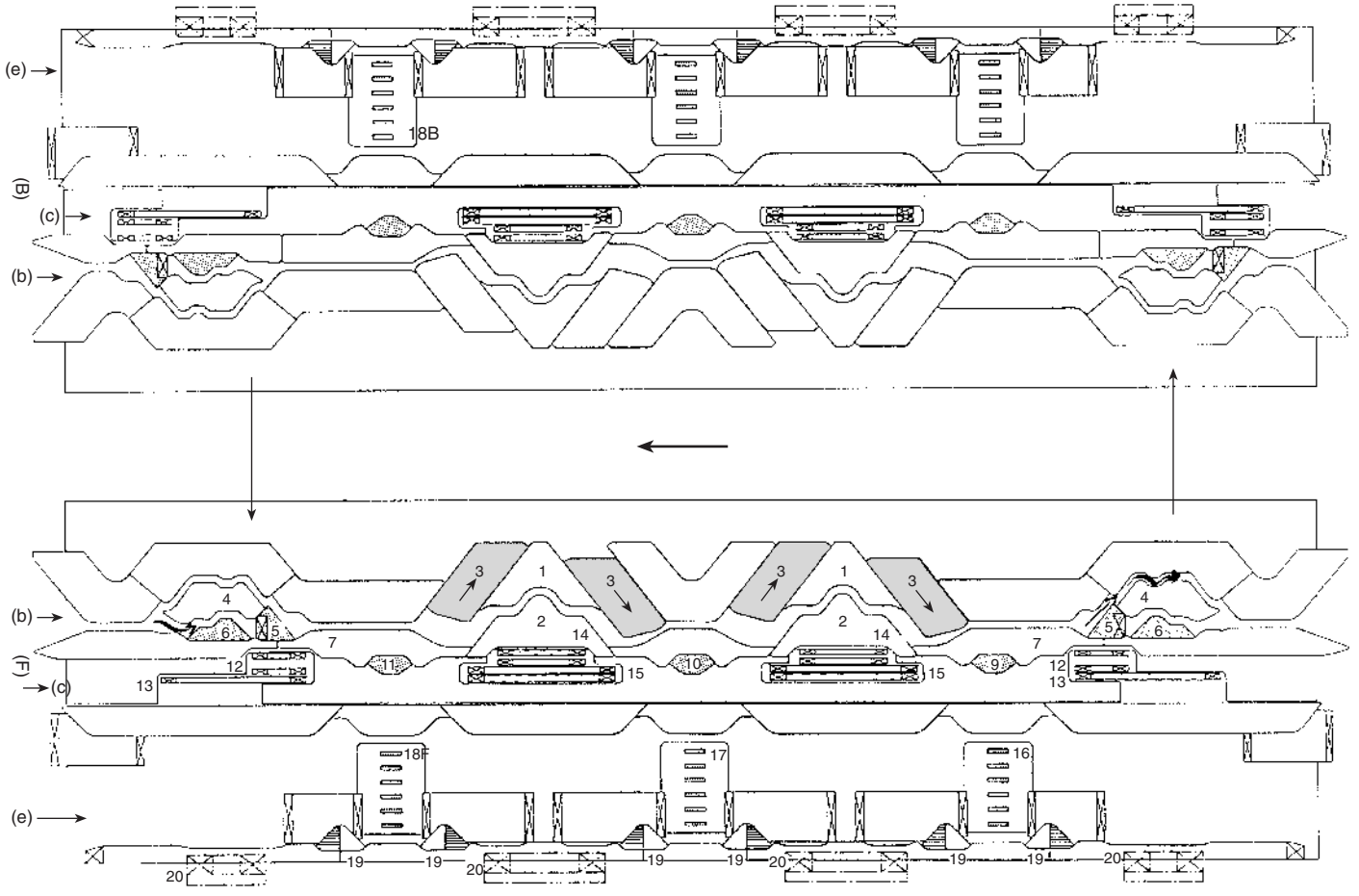

Fig. 19.2 Shimatronic SEC cam system [Shima Seiki].

Skechers EX1050
Skechers v Nike

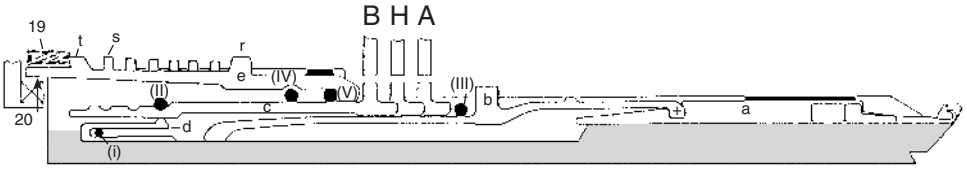

Fig. 19.3 Knitting elements.

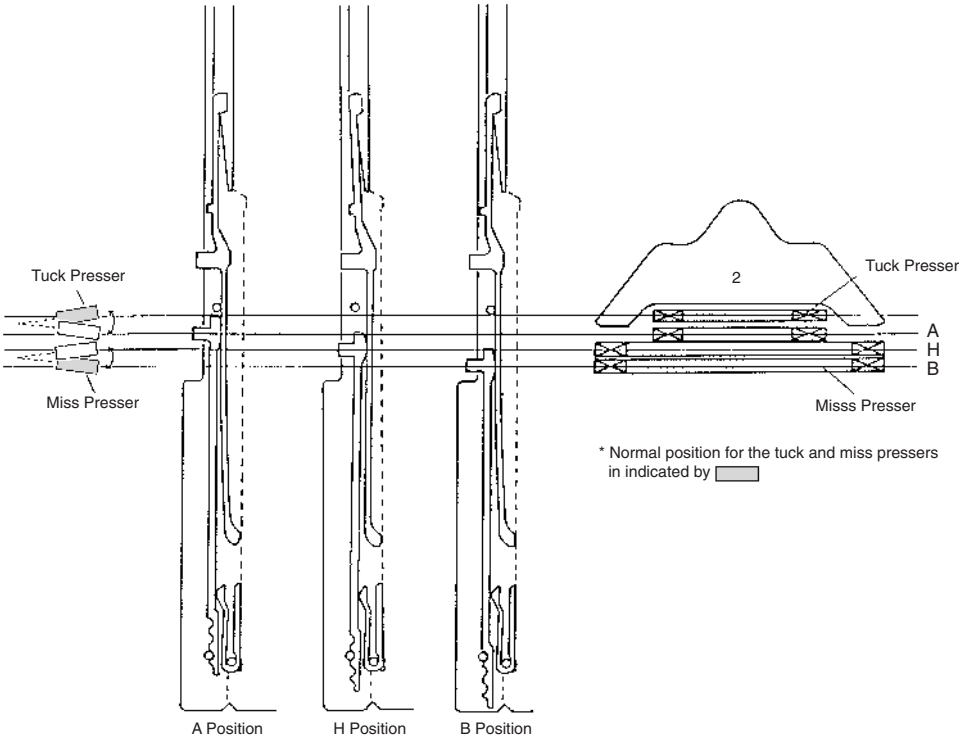

Fig. 19.4 Presser cams.

The presser jack is selectively positioned so that its pressing butt is aligned with one of three presser cam paths (A, H or B), where it can be pressed downwards by a *presser cam* in the cam-carriage. The needle jack can also be sunk out of action by manually pushing it under wire (iii).

The presser cam is a flat plate actuator in the cam-carriage that can be tipped so that it presses down onto the butt of a presser jack placed in its path. There are two presser cams (Fig. 19.4) projecting from beneath each raising cam (2):

The *lower presser* (the *miss presser*) covers the full width of the raising cam for presser jacks in either the H or B positions, causing the knitting butt to be out of action at miss before it can be lifted to tuck height.

The *higher presser* (the *tuck presser*) covers the top of the part of the raising cam and when in action will cause needles in the A track to remain at tuck height. When the tuck presser cam is tilted slightly, it will miss the presser butts in the A position

Skechers EX1050
Skechers v Nike

and those needles will continue to follow the raising cam profile and be lifted to knit height.

There are 4 possible combinations of knit, tuck and miss:

1 Tuck presser cam tipped (A knit). Miss presser cam untipped (H knit, B miss).
2 Tuck presser cam tipped (A knit). Miss presser cam tipped (H miss, B knit).
3 Tuck presser cam untipped (A tuck). Miss presser cam untipped (H knit, B miss).
4 Tuck presser cam untipped (A tuck) Miss presser cam tipped (H miss, B knit).

The head of the *pattern selector jack* (e) rests on top of the presser, against its butt. When the selector is cammed forward, it moves the presser from position B to forward position A. Cancellation cams (9, 10, 11) move the presser from A to B. When the cam is out of action, the presser is guided only to intermediate position H for re-selection.

The selector has a tail butt (t) for raising it. Butt (r) is used to return the selector to the start position for re-selection. Selection butt (s) corresponds to one of 6 positions of the bank of actuator-selecting cams. The selection butts are set-out in descending echelon order.

19.9 The take-down system

The conventional V-bed machine relies on the two sets of needles, together with the takedown rollers, to hold the fabric down. The fabric is drawn downwards from the needle beds and passes between the grip formed by the roller and counter roller. The roller is composed of freely-turning sectional rollers on a common shaft. Each roller is pre-set spring-tensioned as the shaft turns under the influence of a racking pawl controlled by a lever and weight arrangement. Adjustable pressure rollers maintain the pressure grip.

The conventional mechanical takedown requires a continuous flow of knitted structure from the needles to the roller grip. The garment pieces must therefore be knitted in string formation, with each one joined to the next by a course knitted as a draw-thread that is removed later in order to separate the individual garment pieces.

The system operates most successfully on a fabric having a consistent knitting width, and a balanced course and knitted loop arrangement, both between the two needle beds and within each bed. As tension is exerted equally on all wales within the roller grip, those not gripped (at the selvedges if the fabric is being widened) will be untensioned, whilst held loops will receive excessive tension. Other wales, where more continuous knitting occurs, tend to receive insufficient tension. Thus, the mechanical arrangement tends to inhibit both shaping, and also types of designs that involve multiple tuck accumulation and holding loops over a number of courses.

19.10 The fixed-stroke carriage traverse

The distance a hand-powered cam-carriage is traversed can be varied as required. However, mechanically-powered cam-carriages are driven by a chain to traverse a constant width. This includes an 'over-throw' to take the cam-carriage clear of the

Skechers EX1050
Skechers v Nike

needle bed so that striking plates controlled by the machine programme can contact the slides on the carriage to re-set the cams as required. There is thus wasted time if the knitting width is less than the maximum.

19.11 Meeting the requirements of a shaping machine

In order to knit shaped panels or integral garments, it is necessary to meet a number of exacting requirements which can only be achieved with a specially designed fully computerized V-bed flat machine having the characteristics set out in Sections 19.11.1 to 19.11.7.

19.11.1 The shaping control programme

The shaping control programme needs to have sufficient memory to include the data for all the parts of a garment, whether integrally knitted or sequentially knitted shaped-pieces, in the complete range of sizes.

Shaping in width can only be achieved on machines freed from the constraints of constant-width traverse. On electronic machines, the computer is linked to the cam-carriage whose variable traverse and speed is driven from a belt. The traverse distance is varied by the belt drive, which transports the yarn carriers so that they follow the selvedge edge.

19.11.2 Variable-width carriage traverse

One of the most important features of shaping is keeping the cam-carriage traverses to the minimum width using a lightweight compact cam-carriage and belt drive, combined with knitting/transfer cams, and needle butts that are sunk when out of action.

19.11.3 The shaping method

Fashion shaping using loop transfer is the most satisfactory method of introducing shape into garment blanks. It is employed on straight bar frames in the form of plain loop transfer, using a set of rackable fashioning points. Although separate loop transfer fashioning points are employed on some V-bed machines, the most common method is to use the needles to rib loop transfer from needle bed to needle bed, combined with needle bed racking to move the selvedge loops inwards or outwards. Care must be taken to ensure that receiving needles are empty of loops.

19.11.4 Modern take-down systems

Modern machines have a computer-programmed, positively-driven takedown system whose operation is synchronised with that of the requirements of the knitting programme and provides pre-determined fabric tension as required. Sometimes, small sub-rollers provide a nip immediately below the gap in the needle beds. The main control is provided by the nip formed by the takedown roller and the counter roller that presses against its surface. The counter roller is segmented, consisting of individual rollers that are each spring-adjusted.

Skechers EX1050
Skechers v Nike

The roller drive speed can be selected from as many as 31 possibilities and can be stopped during needle bed racking and rib loop transfer, or it can be reversed to achieve zero fabric tension whenever required during the knitting programme.

19.11.5 Control of the fabric during knitting

The production of width-shaped garment pieces requires different or additional facilities to those used when knitting constant-width garment pieces joined by draw-thread separation. No one device alone appears to provide for all conditions of fabric takedown when knitting to shape.

When changing from a narrow width at the end of one garment panel and recommencing on a wider starting width for the next panel, with normal takedown rollers there will be a lack of takedown tension and fabric control at the selvedges, even with a draw-thread connection. If the pieces are not connected together, there will be no takedown tension. The most common solution is to employ a takedown comb in addition to the conventional takedown rollers; this rises to engage its pins with the set-up courses of the new garment piece. As knitting continues, it guides the fabric until it engages with the takedown roller, which then takes over control of the knitted panel. With separated garment piece knitting it is also necessary to employ thread cutters and trappers, otherwise yarn ends will wrap around the rollers.

Shima have a new computer-controlled pull-down system for their *FIRST Whole-Garment* machines. The front and back of the garment each has a separate take-down panel of tiny pins, each section of which can be individually controlled for specific tension. This results in a more dimensionally-accurate garment; for example by allowing shoulder lines for set-in sleeves to be positioned over the shoulders and towards the back.

19.11.6 Stitch pressing-down devices

The object of the presser foot and other similar devices (such as knock-over bits and holding-down sinkers) is to keep the old (fabric) loops low down on the needle stems. They are thus prevented from rising ('riding-up') and staying on the latch spoons as the needles rise for clearing or yarn feeding. This ensures a 'clean' knitting action, irrespective of the variable tensions within the knitted structure or the lack of takedown tension operating onto the fabric from below.

Interest in this concept was regenerated in 1968 by the development work of *Frank Robinson* and *Max Betts* of *Courtaulds*, whose 'presser foot' patents were licensed by *Dubied, Bentley-Cotton* and *Shima Seiki* for use on their flat knitting machines. Other companies also employed stitch pressing-down devices of various types on their machines.

The original presser foot consisted of a piece of wire bent at either end to form a foot (Fig. 19.5). The centre of the wire is carried on the underside of a pivoted arm that hangs downwards from a cross member so that it brushes against the upper surface of the fabric loops as it moves with the cam-carriage. At the end of each traverse, the pivoted arm is tilted to incline in the opposite direction, lifting one foot out of action and lowering the foot on the other end to trail across the needle beds for the return traverse

There is a device working with each cam system and its yarn carrier. Different

Skechers EX1050
Skechers v Nike

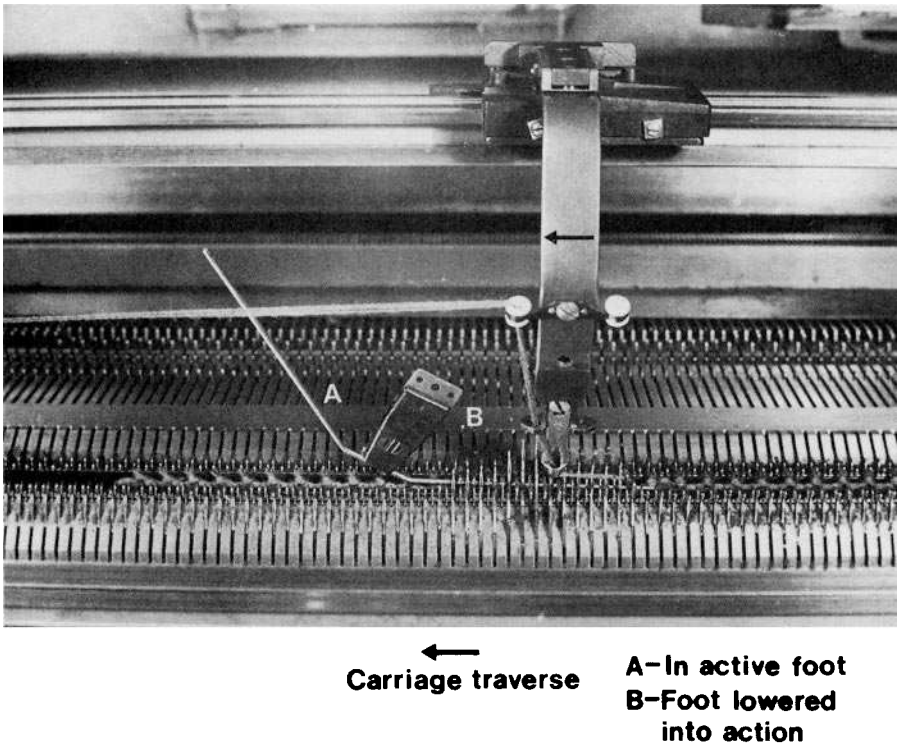

Fig. 19.5 Action of the presser foot. The foot is shown during a right-to-left traverse pressing down the loops on the needles in advance of the yarn carrier. (The cam carriage has been removed for purposes of clarity) [*Knitting International*].

diameters of wire can be employed for varying machine gauges and yarn counts, and it is possible to fit specially-angled feet of triangular cross-section for use during single-bed knitting or loop transferring, if necessary.

The foot acts slightly in advance of the yarn carrier and the rise of the needles for tucking or clearing. It enters the space between the needle beds to gently stroke the old loops down the needle stems as it trails, at a slight decline to their upper surface. Accommodation to differing degrees of knitting tightness can be achieved with a spring-loaded, self-compensating presser foot, which rides-up the support arm when the structure is knitted to a tighter quality.

As the presser foot does not create tension on loops already formed, loops may be held on inactive needles for many knitting cycles and stitch concentrations can be varied across the fabric width. It also enables separate garment panels to be commenced on empty needles and to be pressed-off on completion. The reduced take-down tension removes the problem of shape distortion and the bowing of courses caused by relaxation of the structure, often eliminating the need for first pressing. The structures tend to be heavier, and rib knitted on two-cam systems shows a slightly racked appearance because the presser foot causes yarn to flow into the first limb of each loop that it contacts. Two courses made in the same direction of traverse emphasise the inclination of the loops. To produce a conventional elongated loop instead of a round loop it is important to maintain some take-down tension.

Skechers EX1050
Skechers v Nike

The presser foot principle provides scope for the use of holding of loops, pressing-off, and part-course knitting in the production of unconventional integrally-knitted garments, which require less seaming and virtually no cutting. Amongst the garment shapes are cruciform, tubular plain articles, and garment parts in varying course lengths, knitted as shaped single pieces of fabric in a spiral formation, similar to the principles of the Basque beret or the ideas of *MacQueen* or *Pfauti*. Early attempts employing these techniques met with limited success until the development of computerised V-bed machines with full facilities for integral garment knitting, which could exploit the design potential offered in this area. The original presser foot was less precise than the modern computer-controlled stitch pressers and was susceptible to tension deflection and contact with the needles.

19.11.7 Needle bed racking

A maximum racking distance of 2 inches, in some cases on both beds, is available. This includes 1/4 pitch and 1/2 pitch. An over-racking facility stretches the loops, making their transfer easier.

19.12 The multiple-gauge technique

Sophisticated fashion tastes have, on occasion, required knitwear garments containing zones of both coarse and fine gauge stitches – which can now achieved on one machine using '*multiple gauges*'. This involves a combination of techniques, including half-gauging, using different numbers of yarn ends, intarsia zoning, and blocks of different gauges of needles each working with its corresponding count of yarn and yarn carrier (Fig. 19.6).

Stoll have a multi-gauge range:

The '5.2' with 6-gauge needle hooks gives a range from E 5 to E 10.
The '6.2' with 8-gauge hooks gives a range from E 6 to E 12.
The '7.2' with 10-gauge hooks gives a range from E 7 to E 14.

Stoll and *Shima Seiki* have demonstrated how an apparent range of gauge structures can be knitted all on the same E 6 gauge machine, using half-gauge and full-gauge needle set-outs, together with different numbers of ends of yarn.

Stoll have knitted a sample range on an E 6.2 gauge CMS 340 using Nm 2/32's yarn. In the finest gauge, every needle knitted a single end of yarn (resultant different count – Nm 16).

In the second sample, two ends of yarn (resultant count – Nm 8) were knitted.

In the third sample, half gauge knitting of three ends of yarn (resultant count – Nm 5.3) occurred.

Four ends (Nm 4) were knitted in the fourth sample.

Five ends (Nm 3.2) in the fifth.

Six ends (Nm 2.7) in the sixth and coarsest sample.

Stoll ready-to-wear integrates many of the laborious and time-consuming making-up processes into the knitting process; for example, pockets, button-hole panels, facings, overlapping collars, bows, and loops.

Skechers EX1050
Skechers v Nike

Fig. 19.6 Multi-gauge technique garment.

Skechers EX1050
Skechers v Nike

19.13 The split stitch

In Section 16.4.1 (Wale fashioning) it was mentioned that widening resulted in a needle losing its loop by transfer to another needle so that, when knitting recommences on the empty needle, a 'tuck stitch' type of eyelet hole is formed (Fig. 15.1). In straight bar frame knitting, the covering of this hole is termed '*filling-in*'. A similar technique has been developed for modern V-bed machines termed the '*split stitch*'. There are two methods (Fig. 19.7a and b):

- When knitting with a latch needle, a loop is transferred to an opposite bed loop but immediately, the delivering needle receives a new loop whilst at transfer height and this is drawn through the transferred loop. (Fig. 19.7a).
- When knitting with a compound needle, the receiving needle takes and shares half of a loop on a delivering needle in the opposite bed because that needle has an open hook during transfer and does not cast-off its loop (Fig. 19.7b).

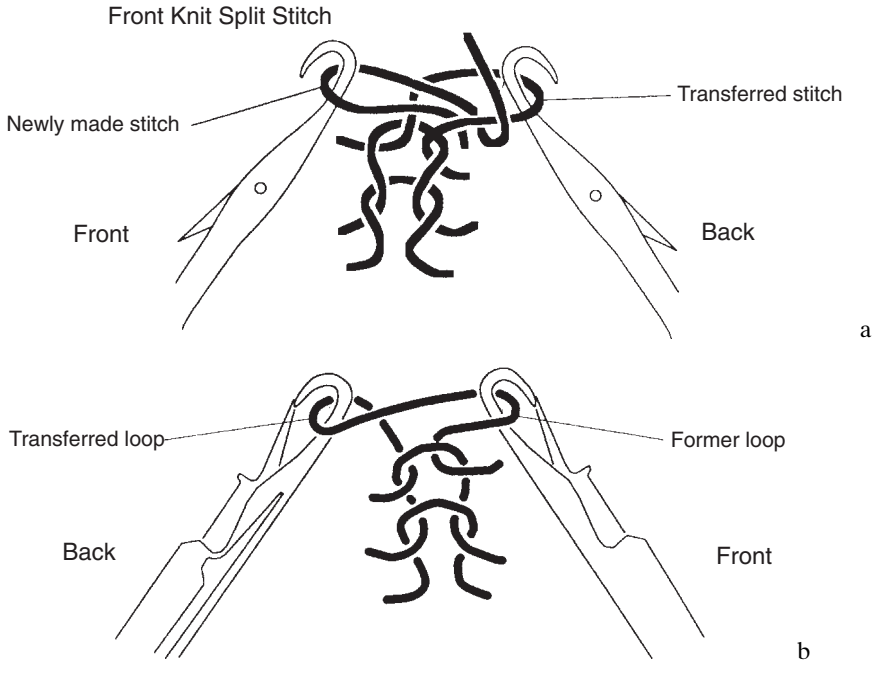

Fig. 19.7 (a) Split stitch using latch needles. (b) Split stitch using compound needles [Shima Seiki].

19.14 Multi-carriage flat machines

Introduced by *Textima* in 1950, the *Diamant* machine has two separate pairs of needle beds, each 72 inches (183 cm) wide, arranged parallel to each other on a rib basis. Each pair knits a straight cut edge garment blank by means of 15 to 18 cam-carriages that complete 10–15 clockwise circuits of the machine per minute, transporting their own yarn packages, stripers and selection drums.

Skechers EX1050
Skechers v Nike

19.15 Seamless glove knitting

The *Shima Seiki Company* has perfected a fully-automatic method of glove knitting in tubular plain on a small width V-bed machine (Fig. 19.8). Each finger is knitted in turn from its tip, with its loops then being held until the palm sequence commences. The glove is completed and pressed-off with an elasticated mock rib cuff. Control of knitting across the varying width is assisted by spring-controlled holding-down sinkers (now housed in the needle cylinder) and a variable traverse of the cam-carriage. A digital inverter provides infinitely variable speeds and smooth operation.

Machine gauges range from coarse gauge E 5, E 7, E 8 to fine E 10, for work, driving and fashion gloves. E 13 and E 15 are ultra-fine for precision work and special applications. Knitting speeds are approximately 1 minute 40 seconds for an E 5 glove to 3 minutes 7 seconds for an E 13 glove. An associated development is the five-toe sock-knitting machine in E 10 and E 13 gauges with 60 and 74 needles. It has a special picker mechanism for knitting the heel, and the step motor stitch control has 90 levels.

Fig. 19.8 The FIRST 123 three-system, short-bed computerised flat knitting machine [Shima Seiki].

19.16 The WholeGarment knitting technique

Shima Seiki launched their patented WholeGarment technique at ITMA'95 with two different V-bed models, each having unique features. These involve integrally

Skechers EX1050
Skechers v Nike

and seamlessly knitting a complete tubular garment on a V-bed rib machine. A new feature of this technique is the ability to knit tubular rib with a high wale density and therefore improved extensibility and appearance.

WholeGarment knitting removes or reduces the need for subsequent making-up (and in some cases cutting) operations, consequently reducing the garment throughput time and work in progress. It also provides the potential for introducing novel styling features into knitwear garments.

The key concept of WholeGarment knitting is the facility to knit seamless body and sleeve tubes of virtually any type of plain, rib or purl construction, plus the ability to increase or decrease the sizes of the tubes and to move or merge them together as and when required during the garment knitting sequence.

The technique of knitting tubular courses of plain knit on a conventional V-bed flat machine is well understood and is used in the production of complete gloves on *Shima Seiki* automatic glove knitting machines.

In Fig. 19.9a, the running thread notations show the production of tubular plain in two traverses on a conventional V-bed flat machine. As the yarn passes across to the loops on the other needle bed, at each turn round of the cam-carriage a tubular course is knitted in plain fabric with the face loops on the outside and the reverse stitches on the inside of the tube. A number of tubular structures can be knitted at the same time (Fig. 19.9b); these can form the start of sleeves and a body.

Using loop transfer and other techniques to introduce or remove needles involved in knitting, it is possible to increase or decrease the size of the fabric tube, to move and merge it into other fabric tubes at a controlled rate, and to semi- or fully-close the tube either at the start or the end of the knitting sequence (Fig. 19.9b).

In order to integrally knit tubular-shaped garments, however, it is necessary to be able to knit tubular rib courses as and when required, particularly for the garment borders and the cuffs of sleeves.

The knitting of *tubular courses of rib* on a V-bed rib machine (Figures 19.10a and b) requires a carefully arranged sequence, particularly if a commercially acceptable wale density of rib is to be knitted. The problem is that in each traverse, front and back bed needles are required to knit the course of rib. The objective is for the front bed needles to eventually receive a complete traverse course of rib (face and reverse) loops and for the back bed to receive the return traverse course of rib loops.

The knitting of tubular rib on a conventional two needle bed flat machine does not, however, produce a rib that is very acceptable as far as extensibility and appearance is concerned because it is essentially knitted on only half the available needles (Fig. 19.11d). A course of 1×1 rib is first knitted using both needle beds (Fig. 19.11a) and is then transferred off onto one single bed (Fig. 19.11b).

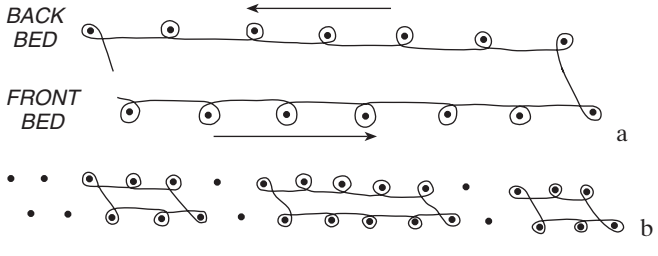

Fig. 19.9 Tubular plain knitting on a flat machine.

Skechers EX1050
Skechers v Nike

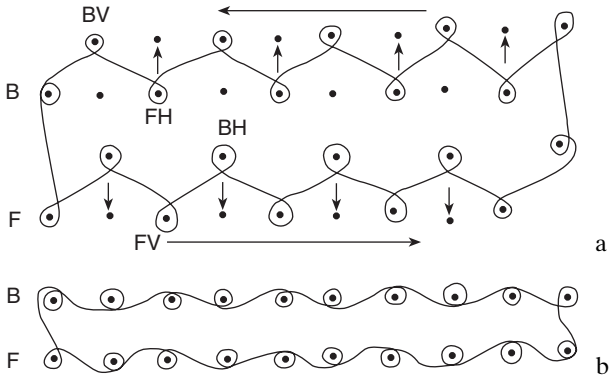

Fig. 19.10 Tubular rib knitted on a carefully arranged needle sequence.

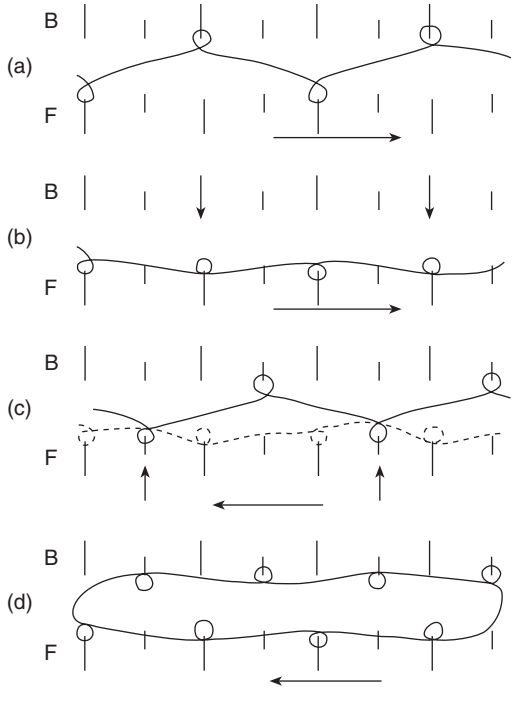

Fig. 19.11 Half gauge tubular rib.

In order to receive transferred rib loops, complementary needles in the opposite bed must be empty of loops whilst other needles in that bed retain their loops from the same rib course of knitting. Additionally, in order to shape the garment by widening and narrowing or joining, tubular courses of rib are required to be transferred laterally onto other needles in the same bed.

The needles that are active therefore require careful selection so that the maximum possible number are involved in knitting. The linear distance between adjacent needle loops must be kept to a minimum, otherwise the extensibility of the rib wales will be seriously impaired.

Skechers EX1050
Skechers v Nike

The *Shima* solution to the dilemma is to provide machines with four sets of needles, two sets for each traverse row of the tubular rib, instead of the two needle beds available on conventional V-bed flat machines.

Shima introduced two models each with a different needle bed configuration:

1 The model SWG-*X configuration* uses *four needle beds*, each having an identical arrangement of needles and selection elements providing for knit, tuck, miss and rib loop transfer. Two additional needle beds are positioned at an angle of 5 to 10 degrees from the horizontal, in a flattened V-bed arrangement above the conventional V-beds. Each needle in an upper bed is exactly aligned above a needle in the corresponding bed beneath it and can thus replace its action if required. Only *compound needles*, with their slim profile, short knitting stroke and sliding action, can perform efficiently in such a confined space. (The *Shima* model SES 122 RT introduced in 1993 also has four beds but the upper two beds contain loop transfer points instead of needles)
2 The model SWG-*V configuration* has *two needle beds* in the normal V-bed arrangement. The needles, however, are in a twin gauge arrangement offset in pairs. Thus on a 5-gauge machine there are 5 pairs of needles (10 needles per inch of needle bed). There is a normal gauge distance between each pair of needles, and a fine gauge distance between each of the needles in a pair in each bed. Thus, on the V model, the pair of needles can function in the same manner as the two aligned needles in the upper and lower beds of the X model. The V model has a simpler configuration but, because of twin gauging, its finest gauge is 7 (14 npi), whereas the X model is available in 7, 10 and 12 gauges, and now has an additional loop presser bed.

19.17 The Shima model FIRST

The name *FIRST* is an acronym representing F (fully fashioning), I (intarsia), R and T (rib transfer) and S (sinker). It employs a *slide compound needle* that has a number of unique design features. Its hook-closing slide is split to form a pair of loop-holding pelerine points at its forward edge. When the slide is advanced beyond its normal hook-closing position, it transports the loop on its shoulder across the beds to engage with the opposite bed and thus transfer the loop (Fig. 19.12).

This transfer action does not require the assistance of a transfer spring on the needle. The needle is therefore centrally positioned in its trick, thus reducing yarn stress.

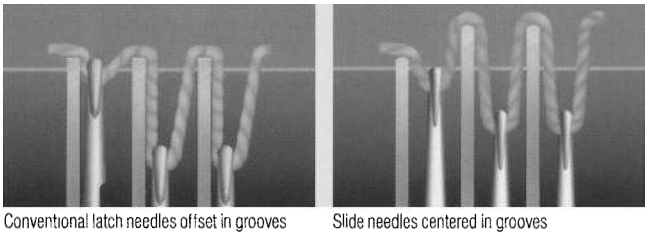

Fig. 19.12 Comparison of the new slide needle with the latch needle [Shima Seiki].

Skechers EX1050
Skechers v Nike

The outside shoulder of the slide is designed to retain a loop whilst another loop is inside the hook. Separate control of the two loops enables certain stitches to be knitted that were previously impracticable.

The slide needle has a thinner hook and a larger inside hook area, thus providing space for thicker yarns. The thinner hook is made possible because the hook does not receive the potentially damaging blows from a pivoting latch. *Shima* has three needle/needle bed arrangements designated small, medium and large. Small has fine needles and a small gap between the needle beds; medium has thicker needles but the same gap between the beds; and large has the same needles as medium but a larger gap between the beds.

In addition, there are four ranges of gauge based on *needle pitch* (the distance in millimetres between two adjacent needles in the same bed). '3.6' provides a gauge range up to E 7, '2.1' is the most popular giving a gauge range from E 6 to E 12, '1.8' provides a range up to E 14, and '1.4' provides the finest range up to E 18.

Three needle bed widths are available – 126 cm, 156 cm and 180 cm (50, 60 and 70 inches respectively). The short bed has 2 knitting cam systems; the other widths have 3 or 4.

Contra sinkers, moving in opposition to the needle movement, provide a knock-over surface and reduce the needle movement. The resulting lower yarn tension enables different sizes of loops to be drawn.

Above the V-bed are two horizontally-mounted beds containing ancillary elements. The upper front bed carries loop transfer jacks and is split into two sections that can be racked outwards for widening and inwards for narrowing to take place simultaneously at the selvedges, without the need for empty traverses and separate left and right racking of the transfer jack bed.

The upper rear bed holds special loop pressers that press down on selected individual loops in the front or back needle beds. With this arrangement it is possible to press an inlay yarn behind a non-knitting needle.

Conventionally, yarn carriers are moved into position by the cam-carriage. After a course of intarsia or integral knitting, the carriage must use an empty course to move the yarn carrier out of the way in order to knit the next course. The *Shima FIRST* machine has a motor-driven yarn carrier system that automatically '*kicks-back*' the yarn carrier into its field of knitting and out of the way of the carriage, thus eliminating the need for empty traverses.

19.18 The Tsudakoma TFK machine

The first automatic V-bed machine to operate *without cam boxes*, the model *TFK*, was demonstrated by the *Tsudakoma Corporation* at the 1995 ITMA exhibition. The *Asahi Chemical Industry Co.* supported its earlier development. The model *TFK* has a working width of 122 cm (48 in) in gauges 7, 8, 10 and 12, with a maximum variable speed of 1.2 m/sec.

Individual linear electric motors drive the needles in their tricks (Fig. 19.13) The computer and control system regulate the linear motors to simulate the conventional actions of the knitting and transfer cams.

As each course of knitting takes place, the knitting curves or *waves* of the needles are clearly visible. The machine is fitted with 12 or 16 yarn carriers on four double-sided rails. Each yarn carrier is driven by its own quick-start step motor, via a

Skechers EX1050
Skechers v Nike

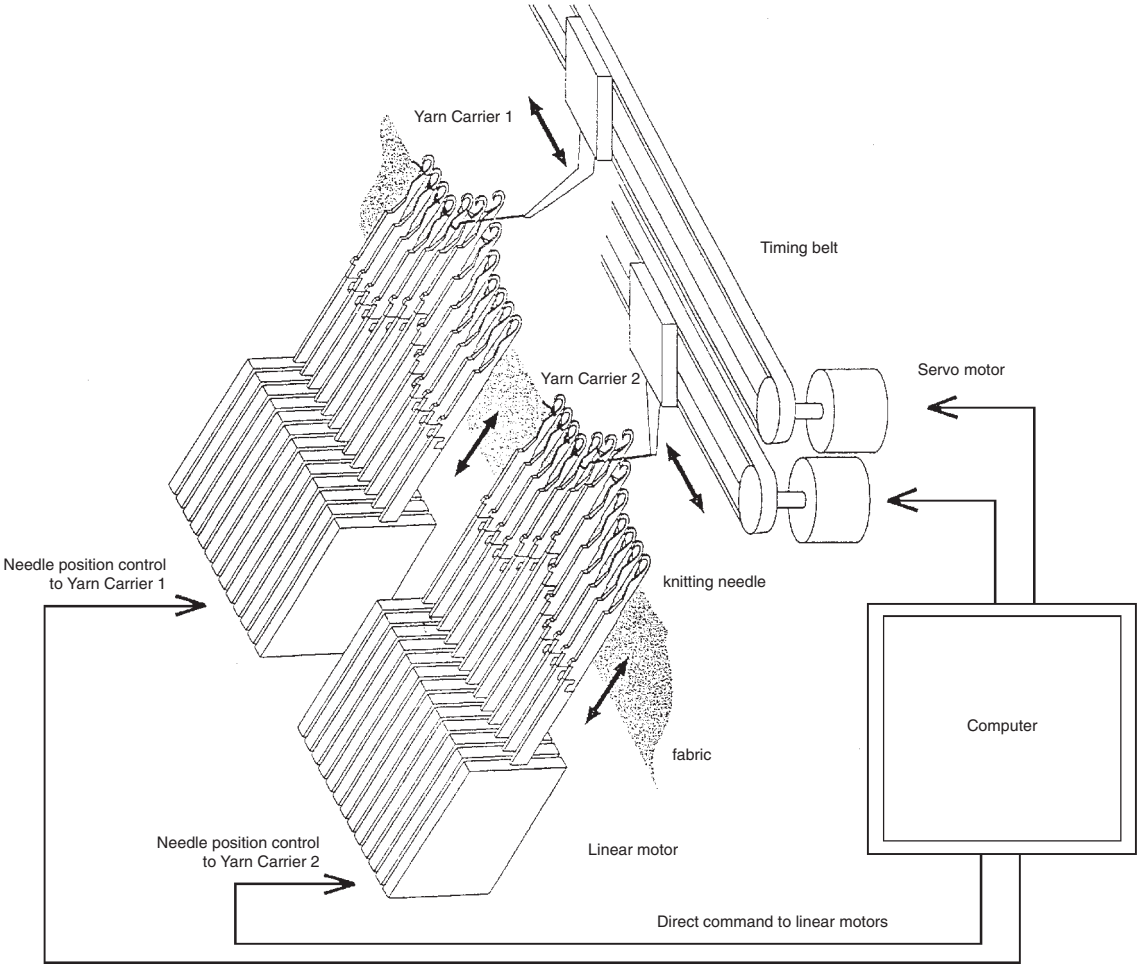

Fig. 19.13 The TFK driving system [Tsudakoma].

toothed belt. The yarn runs from the package to the yarn guide in a direct line via a yarn tensioner and knot catcher.

The machine computer synchronizes the needle clearing with the yarn carrier drive. Stitch length is programmed for each needle, with the linear motor allowing the needle to draw whatever loop length is required. Up to 30 different stitch lengths can be drawn across the knitting width. The stitch length ranges up to 8 mm in 0.1 mm graduations.

There is a moveable holding-down sinker between every two needles, each of which is driven by its own linear motor. They can be used for accumulated tuck stitch fabrics or, when knitting without the takedown system, needle bed racking by means of a step motor can take place over up to 7 needles in either direction.

Knitting begins with the start-up comb engaging the first course of the fabric, which is then taken over by the sub-assembly and final takedown mechanism. All have individually-programmed motor drives. When the garment component is completed, the yarn ends are clamped and severed by an automatic cutting device. The

Skechers EX1050
Skechers v Nike

needles are then activated to press-off, without taking the yarn, and the component is ejected. Blanks or fully-fashioned garment pieces can be produced, including sequentially knitted fronts, backs and sleeves.

Various problems have been encountered, particularly due to the absence of brushes, latch openers or stitch pressers, which are usually attached to the cam-carriage. The greatest disadvantage is, however, the cost of the machine in comparison with conventional V-bed machines.

References

1. LANCASHIRE, J. B., 50 years of V-bed flat knitting machinery, *Knit. O'wear Times Yr. Bk.*, (1968), 221–224.
2. ANON., Recalling a century of flat progress, *Knit. Int.*, (April 1992), 36–40.
3. O'BRIEN, M., The development of the flat knitting machine, *Knit. Int.*, (April 1997), 22, 24, 26, 28.
4. MILLINGTON, J. T., The MacQueen knitting technique, *Hos. Trade J.*, (May 1961), 97–100.
5. SPENCER, D. J., Trend-setters at ITMA 99, *Knit. Int.*, (1999), Sept., 19–21.

Further information

ANON., Flat machine programming, *Knit. Int.*, (Oct. 1998), 38–42.
ANON., Tsudakoma profiled, *Knit. Int.*, (Oct. 1996), 20–22.
ANON., Ultrafine gloves and 5-toe socks, *Knit. Int.*, (1999), Oct., 39–41.
NAKASHIMA, T., Total-Garment technology, *Knit. Int.*, (Dec. 1995), 65–70.
SPENCER, D., Patent for tubular knit on V-bed, *Knit. Int.*, (June 1992), 66.
SPENCER, D., Shima four bed patent, *Knit. Int.*, (Apr. 1991), 32–33.
SPENCER, D., Shima integral knitting patent, *Knit. Int.*, (June 1991), 22–25.

Skechers EX1050
Skechers v Nike

20

Circular garment-length machines

20.1 Circular versus flat machines

On the basis of knitted stitches per minute against the capital cost of the machine, circular garment-length machines are generally more productive than V-bed flat machines for cut-and-sew knitwear. Prior to computer controls, the price/performance ratio was 1 : 3 in favour of body-width circular machines. Against electronic V-bed flat machines, however, circular machine builders had to move to less versatile large-diameter machines (33–36 inches) in order to achieve a ratio of even 1.2 : 1. There are large numbers of body-width RTR and SPJ mechanically-controlled machines still in operation, as well as some that have been retro-fitted with electronic controls.

Circular garment-length machines are mainly of the rib cylinder and dial type (Fig. 20.1) or of the double-cylinder purl type. Although more restricted in patterning capabilities than flat machines, they may offer advantages in productivity and fineness of gauge.

Many are of the revolving cam-box type whose cams, selection units and striper units are altered when their externally positioned levers are contacted as they pass by the control position on the periphery of the machine (Fig. 20.2).

The peg drum control unit for the garment-length programme is now tending to be replaced by an endless film loop that is driven by a horizontal perforated roller. The film is advanced by one row of holes for each feed or transfer section that passes per cam-box revolution. When no changes are required, an economiser rack-wheel operates.

On *Bentley* machines, the *Mechatape Pattern Control Unit* was introduced to replace peg drums or trick-wheels and provide a virtually unlimited pattern depth, faster running speeds, easier pattern preparation and more rapid pattern changes. The control unit consists of a drum whose perforations correspond to the staggered rows of punched hole positions on a plastic film loop. Each row operates through the bank of horizontal levers onto the levers of a passing selection unit. The arrangement in the selection unit is fixed for a complete circuit of the machine whilst it selects onto the jack pressers arranged around the cylinder.

Skechers EX1050
Skechers v Nike

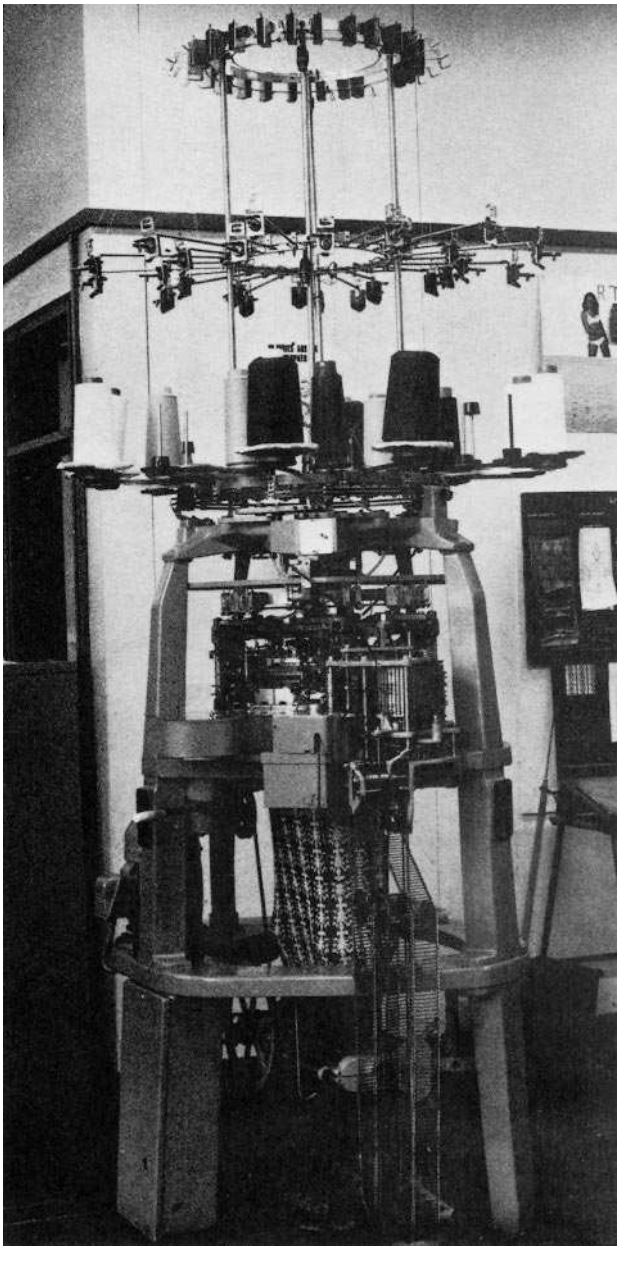

Fig. 20.1 RTR circular garment length revolving cam-box rib machine. The peg drum control unit and timing chain are clearly visible. Also note the slipping belt take-down mechanism which draws down the stationary fabric [Walter Bullwer].

The fabric take-down mechanism cannot be driven directly by the machine rotation as the length of fabric knitted per machine revolution can vary in different parts of the garment sequence. The slipping-belt system is an efficient arrangement that accommodates itself to the varying rates of fabric production.

The take-down rollers and the belt pulley that drives them via worm gearing are

Skechers EX1050
Skechers v Nike

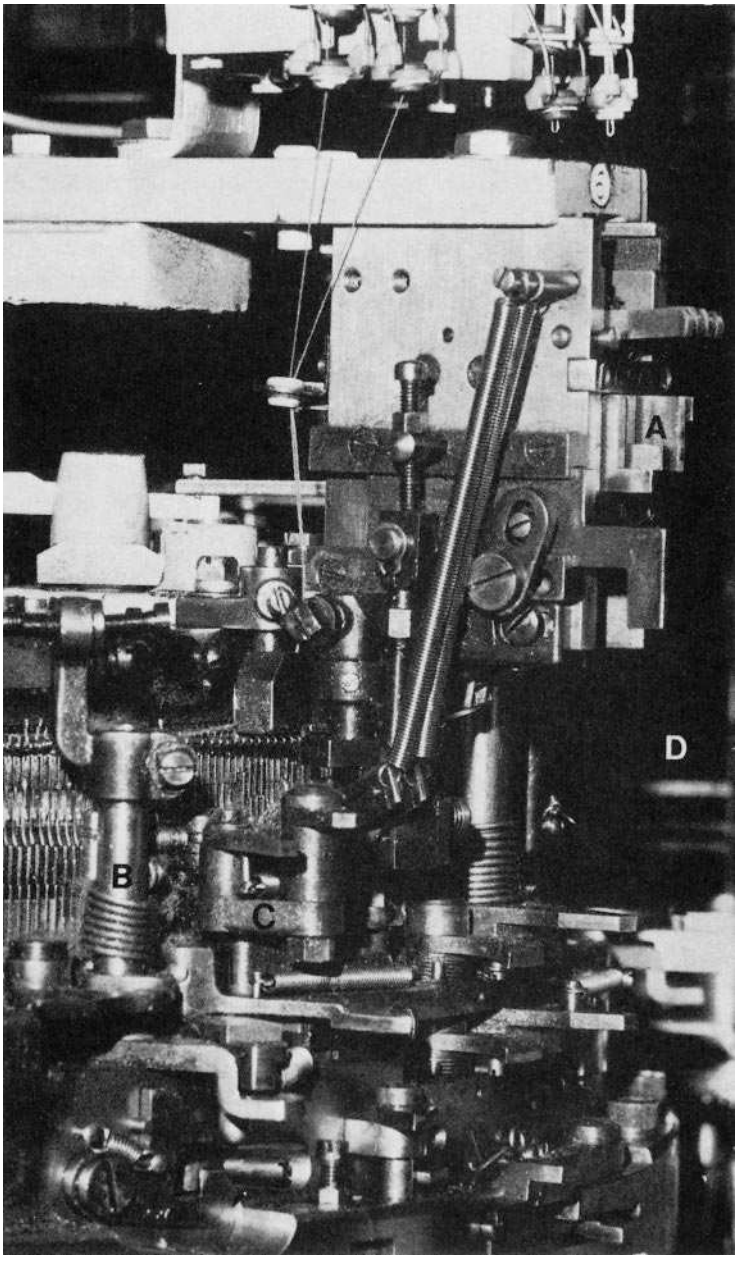

Fig. 20.2 Close-up of RTR revolving cam-box showing the exterior striking levers (A = striper box; B = dial stitch cam adjustment and levers; C = cylinder stitch cam and adjustment levers; D = stationary striking lever post) [Walter Bullwer].

attached to a pivoted lever. The rollers are driven faster than the rate of knitting so that, as soon as the surplus fabric has been drawn away, they tend to climb up the fabric, lifting the pivoted lever together with the belt pulley so that the belt becomes slack, stopping the drive to the rollers until sufficient fabric has been knitted to lower the lever again. This self-adjustment occurs so smoothly that a consistent take-down tension is ensured.

Skechers EX1050
Skechers v Nike

20.2 The double-cylinder garment-length machine

Spiers produced a successful machine of this type in 1930, termed the '*Spensa Purl*' machine. It has a revolving cylinder and internal sinkers and is capable of knitting garment-lengths with a tubular welt and rib border. In 1956, *Wildt (Mellor Bromley)* replaced it with the model SPJ, which has an anti-clockwise revolving cam-box, no dividing cams or internal sinkers, and sliders with pointed noses for opening the latches of needles knitting in the opposite cylinder. As well as being mechanically more reliable for purl knitting, the patterning potential of this model was improved over the years.

The main gauges are 6–12 npi with 2/16's (NeK) worsted being an average count for 10-gauge. Machine diameters are 16–20 inches (40–50 cm approx.) with six feeds; 22 inch (56 cm) (which replaced the 11 inch diameter for infantswear) with eight feeds; and a 33-inch (84 cm) model with twelve feeds.

The machine produces knitwear garments for adults, children and infants with a separating course, welt, 1 × 1 or 2 × 2 rib border, and a body or sleeve panel sequence. Stitch patterning may include any of the following in plain colour or striped-in colours: plain and purl, tuck rib, tuck purl, float stitch jacquard, and rib jacquard.

The machine has the standard knitting-element arrangement for a purl machine of one set of double-ended needles that can be controlled for knitting or transferring by either of two sets of sliders that operate from opposing tricks of the top and bottom cylinders. The tricks of the top cylinder are held in alignment with the bottom cylinder by a dogless head, whilst the cam-boxes for the two cylinders are rotated in unison by means of a vertical cam-shaft and two pinions.

Figure 20.3 illustrates the basic arrangement of the elements and cams, subject to the machine builder's modification. Each set of sliders has a single operating butt position and is controlled from a knitting cam-box. The butts are alternately arranged long and short, with long butts in one cylinder opposite to short butts in the other for obtaining a 1 × 1 needle arrangement.

Controlled by a cam-box below the bottom knitting cam-box is a set of jacks having single operating butts. Each intermediate jack is supported at its base by the ledge of a spring-tailed jack, placed behind and below it in the same trick, which has a tail butt controlled by raising cams when not selected (the indirect selection principle was described in Section 11.9). The intermediate jacks thus translate the selection into a movement causing the bottom sliders to be lifted for knitting or transferring their needles.

The presser selectors have 79 butt positions, corresponding to the pattern units (or presser brackets) that have batteries of 79 slides. Of these, 75 are available for patterning. Of the bottom four, which are used for isolation purposes, three are controlled by the *Cardomatic* film with set-outs of 1-out-1-in, 2-out-2-in and cancelling out the knitting selection, whilst the other line of all-in butts can be selected from the *Mechatape* for cancelling all transferring.

Two full-size pattern units may be provided for double selection on the bottom cylinder at each feeder. At selection I, needles are selected to remain at miss height whilst the remainder are raised to clearing (knit) height. At selection II, of those needles taken to clearing height, some are selected to remain at that height whilst the others are raised to be transferred to the sliders in the top cylinder.

Thus at selection I, the tail butts of non-selected jacks pass over the raising cam K to lift their intermediate jacks onto cam k. As the intermediate jacks pass over k

Skechers EX1050
Skechers v Nike

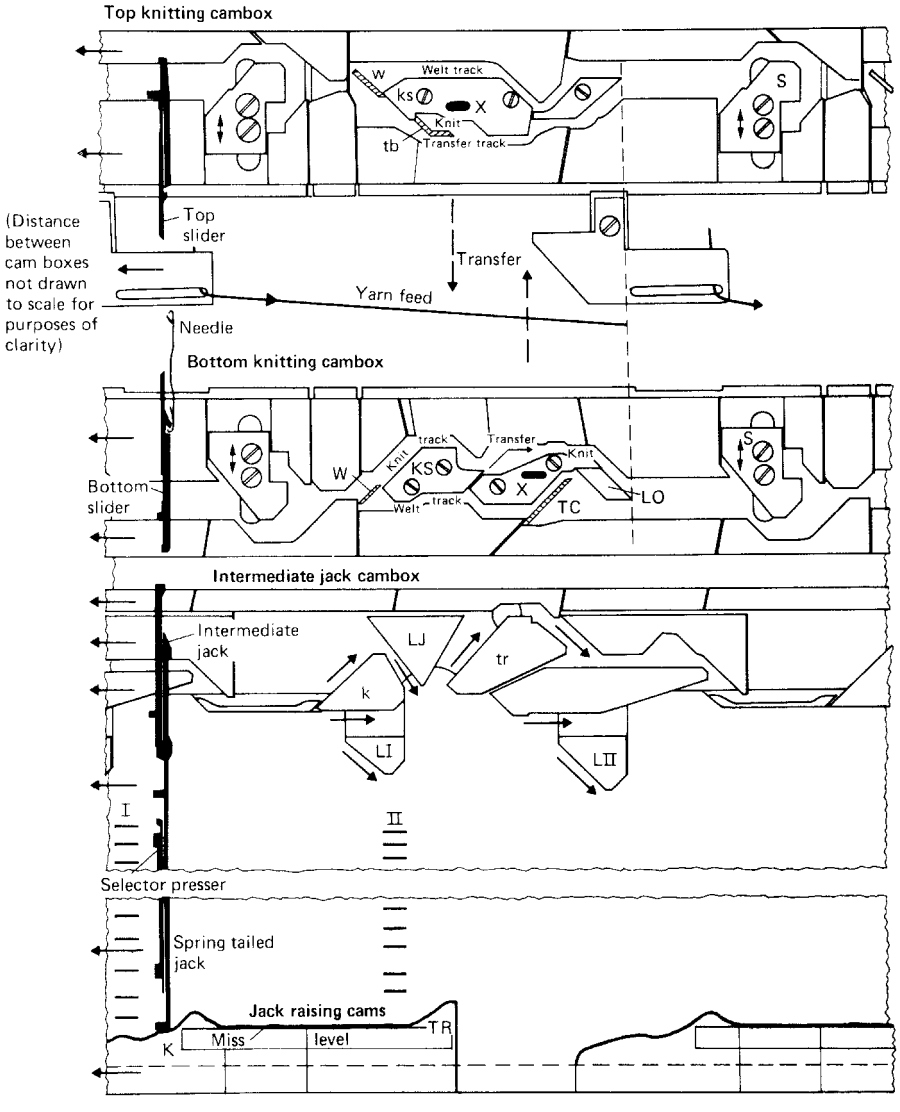

Fig. 20.3 Cam system elements of a circular purl machine.

they lift their bottom sliders onto the clearing cams KS putting them into the knitting track. The butts of non-lifted sliders will pass through in the welt (miss) track below the KS cams. S are the stitch cams for the knitting sliders, which can be automatically changed to any one of four pre-settings of 'quality' during the garment cycle.

Prior to selection II, the non-selected intermediate jacks are lowered by cam LJ and their spring-tailed jacks by cam LI. These jacks therefore have their bottom butt aligned with raising cam TR. If non-selected by selection II, they are raised over cam TR and lift their intermediate jacks over cam tr, raising their bottom sliders to transfer their needles to the top cylinder. At this moment, the tails of sliders that

Skechers EX1050
Skechers v Nike

are transferring needles pass across the spring-loaded cam which presses down on them, causing the front of the slider to pivot upwards and unhook itself from the transferred needle. Needles of jacks non-selected at I but selected at II will pass through the upper cam track at knit height. Cam LII lowers the spring-tailed jacks ready for the next double-selection sequence.

In the knitting cam-boxes, certain cams are bolt cams of the plunge type, which are introduced or withdrawn out of the track as required for any cam-box revolu-

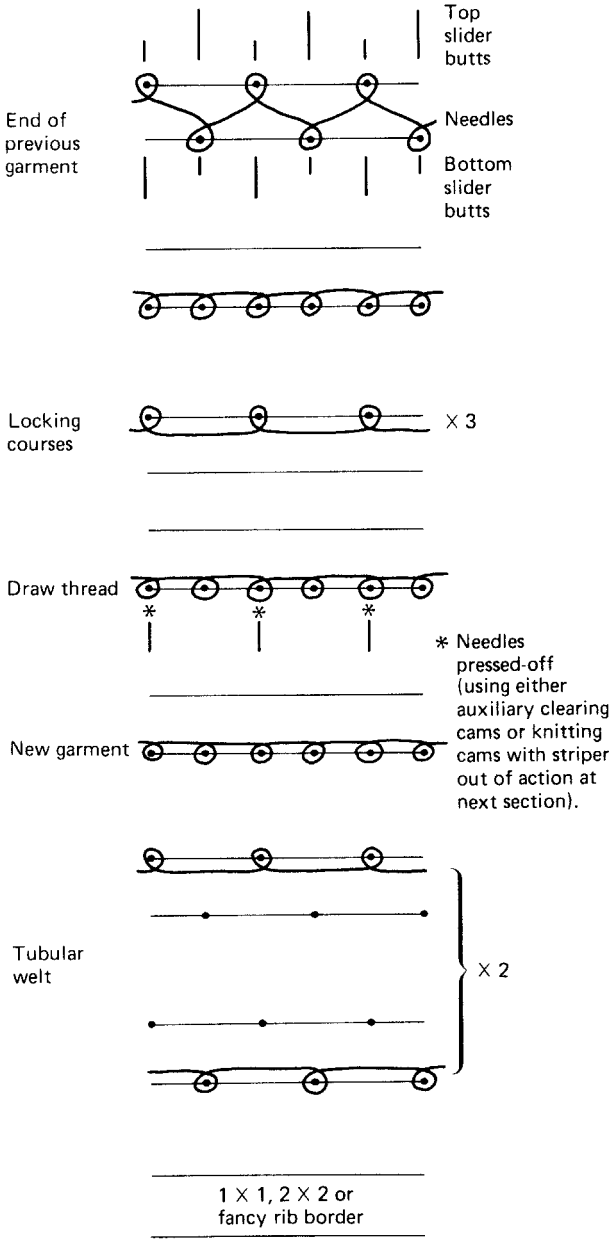

Fig. 20.4 Part of a purl garment knitting sequence.

Skechers EX1050
Skechers v Nike

tion. When fully in action, they deflect all sliders passing through, when half in action they only deflect long butt sliders, and when out of action the cam-track is clear.

Cams W are the welt bolt cams, which guard the entrance to the welt tracks and, when fully in action, cause all sliders with needles to knit. Cam W is in for knitting or the transferring of all needles in the bottom cylinder, but is out of action for selected knit miss or knit tuck stitches. In the top cylinder there is no selection so therefore those bolt cams are used during pattern selection. Cam W is employed when knitting, transferring down or receiving transferred up needles in the top cylinder. Half in action, it is employed for knitting or transferring on a 1 × 1 arrangement, and when fully out of action, needles in the top cylinder will miss. Cam tb is the bolt cam for transferring needles down from the top cylinder and works in conjunction with spring loaded cam x.

In the bottom cylinder, the bolt cam TC can be introduced to cause needles controlled by sliders in the welt track to be lifted to tuck. When employed in conjunction with cam L0, the needles are immediately lowered to miss but their latches are opened.

Figure 20.4 shows part of a purl garment knitting sequence.

20.3 The RTR garment-length machine

This fully-automatic garment-length rib machine was introduced in 1938 by *Wildt (Mellor Bromley)* as a replacement for their RSB model of 1936, which had no facilities for rib loop transfer. Its anti-clockwise revolving cylinder and dial cam-box has cam sections of equal size whether they are for knitting feeders or rib loop transfer. A unit set in advance of the section can select the cylinder needles for the knitting or transfer action. The original RTR has six cam sections, four for knitting (2 and 3; 5 and 6) and two for transfer (1 and 4). Section 4 also has facilities via the back butt set-out of the dial needles for changing the rib, either by collective dial-to-cylinder loop transfer or by dial needle loop press-off. Four *Brinton* trick-wheel units provide selection for the cylinder needles – one for each transfer section and one for every two knitting sections, with the selection at section 2 being repeated at 3 and the selection at 5 being repeated at 6.

In Figures 20.5 and 20.6, section 4 contains the cams for selective cylinder-to-dial loop transfer (cams R and Y) and collective dial-to-cylinder loop transfer (cams X, P and Q).

In section 1, cam T may be set to raise cylinder needles to clearing height and, as there is no feed position in this section, when lowered by cam U they will press-off their loops (for the end of the garment sequence). In a similar position at section 4 are raising and lowering cams P and Q, which act as receiving cams for the collective transfer of dial loops when cam I acts on the back transfer butts of dial needles.

It soon became apparent that the machine's garment-length knitting sequence of drawthread separation course, tubular welt, 1 × 1 or 2 × 2 rib border or waist, body panel section, and press-off locking courses could be used for knitting jacquard, double-jersey, or coarse-gauge knitwear as well as stitch-shaped underwear. A six knitting-section model, with each section having its own selection unit, thus became available for jacquard with interchangeable transfer sections. For double jersey, the dial shogging was adapted for interlock knitting. Depending upon the end-use of its

Skechers EX1050
Skechers v Nike

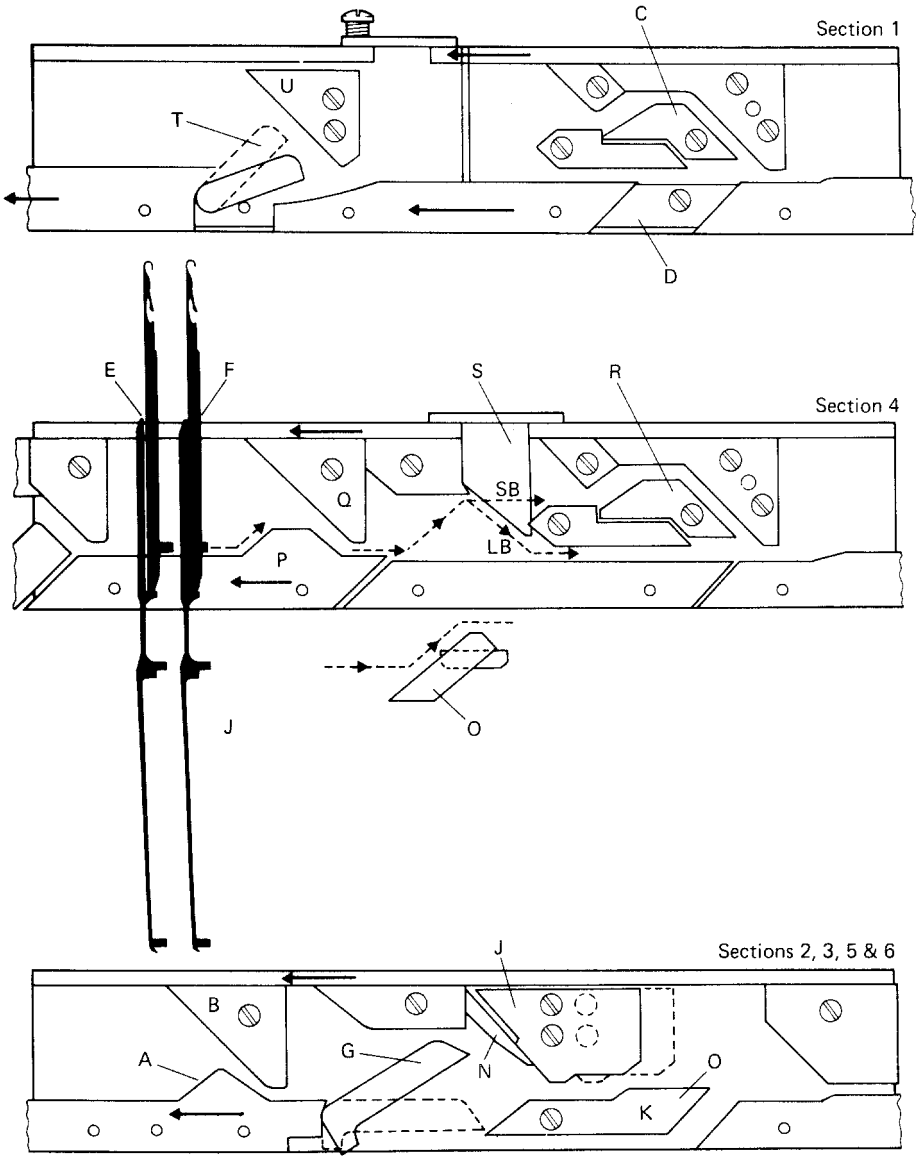

Fig. 20.5 Cylinder cam system of an RTR rib loop transfer machine.

model, panels can thus be knitted in 1 × 1 rib, dial-only knit, interlock milano rib, rib jacquard, or half- or full-cardigan, with selective patterning in rib transfer, coloured stitches, miss, tuck, knit or raised cloque relief stitch. Articles that can be knitted include vests and panties, cut and sewn sweater dresses and trouser suits, jumpers, coarse-gauge cardigans, and sweaters.

As well as the original 13- and 15-inch diameter models, other diameters were introduced, including 18, 20 and 22 inches to cater for more than one panel width (separated by a needle-out line) and the knitting of high-shrinkage synthetic yarns

Skechers EX1050
Skechers v Nike

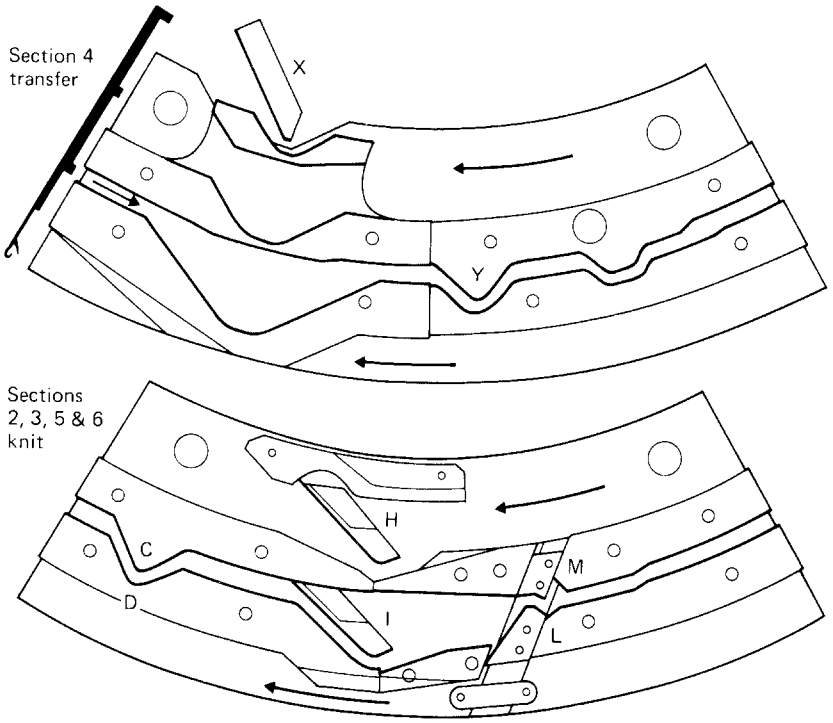

Fig. 20.6 The RTR dial cam system.

or coarse gauges. This concept was extended to a 33-inch diameter machine, with flexibility of knitting width and economy in cutting waste achieved by removing the block of needles not required, thus leaving a panel of floating threads.

Machine speeds range from about 16 to 32 rpm, according to machine design and type of stitch being knitted, with the cam sections being between eight and twelve in body diameters (and up to eighteen in the 33-inch diameter model). Gauges extend to 16 npi for underwear or jerseywear down to 7 npi for knitwear, with the coarse model having gauges of 3 and 6 npi.

20.3.1 The basic elements and camming arrangement of the RTR machine

The geometric selection employed on this machine has been previously described (Section 11.9). Figures 20.5 and 20.6 illustrate the arrangement of cams for a six-section machine; other models are similar. On the 33-inch diameter model, however, each presser has 79 butts, with a maximum of 73 available for patterning. One is removed to leave a gap. The remaining five are used for isolation purposes as follows: all butts on, 2 out of 3, 1 out of 3, odd needles only, even needles only. The dial needles are usually set-out with every third needle having a back butt for dial-to-cylinder transfers or press-off for achieving 2×2 rib. Cylinder needle butts may be set-out 1 short 2 long for 2×2 rib in the waist.

There is a jack-raising cam associated with each cylinder selection unit raising

Skechers EX1050
Skechers v Nike

any jack butts whose pressers are not selected (Fig. 11.6). As empty needles may be required to re-start knitting, in sections 2, 3, 5 and 6, cams A and B, C and D raise and lower the cylinder and dial for latch opening. Cylinder cam G is a swing-clearing cam that can be set for knit or miss and is split into two sections; the top section acts on all butts, the bottom section acts only on long butts. In the dial, odd needles usually have long back knitting butts and are raised by cam H, whilst cam I raises even needles with long front knitting butts.

The front part of cam N is fixed, the back part J is shown in a solid line for delayed timing and in a dotted line for synchronised timing. The upthrow cam is K; L and M are the stitch and upthrow cams in the dial. The two cams L and M are adjusted together and have three pre-set positions for automatic alteration during the garment sequence for the welt, rib border and body panel.

In both cam sections 1 and 4, cylinder cam R is aligned with dial cam I as the delivering and receiving cams for cylinder dial rib loop transfer. In section 4, cam O in action will cause all cylinder needle loops to be transferred to the dial for dial-only knit, by means of the middle butt of the jack. If cam S is in action, long butt jacks will be lowered before transfer can occur. This is used for producing a 2×2 rib set-out for the waist at section 4.

20.4 Jumberca cylinder and dial and double-cylinder machines

The *Jumberca* cylinder and dial, and double-cylinder machines are electronically-controlled and have almost unlimited selection in the cylinder and dial and in the bottom cylinder of the links-links machine. Stitch length is infinitely adjustable in each bed. The programmable width device adjusts the fabric width to the accuracy of a single needle. Needles are taken out of action so that floating threads join the two fabric edges of the open width fabric; this can save up to 15 per cent on yarn. The fabric remains in tubular form through the take-down rollers, thus maintaining uniform tension around the circumference and throughout the garment sequence [1].

20.5 Mecmor Variatex machines

The *Mecmor Variatex* machines are a range of circular cylinder and dial, garment-length machines that knit garment-lengths in open-width on 300 degrees of the machine's circumference. The revolving cam-box model '180' has a diameter of 28 inches, providing a maximum knitting width of 70 inches (180 cm). The remainder of the machine's periphery consists of a command sector containing a multi-track *Mylar* film loop with insertable plastic studs and a master control drum to control each knitting or transfer station as it passes.

The knitting width may be reduced according to requirements, thus economising on yarn. The garment-length is of constant width, with fringes of yarn produced as each course is striped into and out of action for the knitting width.

The latest electronically-controlled models ('2500' onwards) have a revolving cylinder and dial with a 40-inch diameter. The maximum fabric width is 2.75 m. In a standard model there could be twelve knitting systems and six transfer stations.

Skechers EX1050
Skechers v Nike

Fig. 20.7 Body-size seamless garment [Santoni].

Skechers EX1050
Skechers v Nike

20.6 The 'seamless' bodywear garment machine

The *seamless bodywear garment machine* knits body-width underwear garments (Fig. 20.7) requiring little or no making-up and with no uncomfortable side-seams. The machine, whose simple construction owes much to knowledge gained from the development of hosiery and tights machinery, is produced in the *Lonati Group* by *Santoni*.

The model SM8-8 is an eight-feed, fully electronic, single needle selection machine that can produce a knitted-in welt, and structures such as openwork, stripes, jacquard, terry and plated fabrics. Spliced areas for shaping and figure-control can be incorporated using step-motor-controlled stitch cams. Diameters range from 10 to 15 inches in gauges E 16 to E 32.

An eight-feed cylinder and dial machine with four two-way transfer stations is being developed in a diameter range from 14 to 22 inches and gauges E 14 to E 16. The 20 and 22-inch diameter machines have twelve feeds and six transfer stations.

Reference

1. STOVHASE, R., Development potential: ideas involving circular knitting machines for measured fabric lengths, *Knit. Technol.*, (1998), 3, 105–6.

Further information

ANON., Fifty years of circular sweater-strip machinery, *Knit. O'wr Times Yr. Bk.*, (1968), 231–6.
GOADBY, D., Where next with garment making machines? *Knit. Int.*, (1978), Sept., 79–82.
INNES, R., Garment length key is move to all-electronic, *Knit. Int.*, (Dec. 1987), 58–60.
LANCASHIRE, J. B., Garment making interlock machines, *Hos. Trade J.*, (1955), Nov., 62–4.
LANCASHIRE, J. B., Sweater knitting on superimposed cylinder machines, *Knit. Times*, (1973), 17 July, 49–51.
REICHMAN, C., Merits of the circular technique and guide to sweater-strip machines, *Knit. Times*, (1978), 30 Jan., 21–3, 39.

Skechers EX1050
Skechers v Nike

21

The manufacture of hosiery on small-diameter circular machines

For centuries the production of hosiery was the main concern of the knitting industry. The prototype machines for warp, circular, flat and fully-fashioned knitting were all originally conceived for knitting hosiery. Nowadays, however, hosiery production is centred almost exclusively on the use of small-diameter circular machines. In single cylinder and fine-gauge hosiery particularly, much of the latest development is centred in Italy. One company – *Lonati* – has acquired a major portion of hosiery machine-building businesses, including their research and patents.

21.1 Types of hosiery

The term '*hosiery*' specifically refers to knitted coverings for the feet and legs, but it may be generically (but confusingly) applied to all types of knitted goods and fabric.

Most hosiery articles are knitted with integral tubular legs and feet. The welts and top are usually knitted first, the foot and toe last. Closing the toe also produces a secure finish.

The machines have a master *machine control* that automatically times and initiates the mechanical and electronic operations, and changes of stitch length necessary to produce the garment-length knitting cycle. Later making-up, such as toe-closing and finishing operations, off the machine may still be required.

Hosiery is usually available for a range of foot sizes. In the case of staple fibre spun yarns such as cotton or worsted, different foot lengths are obtained by knitting them with differing total numbers of courses. However, hosiery knitted from continuous-filament stretch nylon yarn may have an extension of 50 per cent so that a standard foot length is capable of accommodating itself to various foot sizes.

The following types of hosiery articles are particularly common:

- *Hose*, which have a leg-length extending above the knee;
- *Three-quarter hose*, which are of knee-length (approximately twice the foot length);

Skechers EX1050
Skechers v Nike

- *Men's half-hose*, which are usually in two leg-length ranges of 7–9 inches and 11–15 inches (18–23 and 28–38 cm);
- *Stockings*, which are designed to fit the leg up to or above the knee and may or may not be self-supporting;
- *Tights*, particularly in fine gauge, which are termed *panty-hose* in the USA. They may have a body section of the same knitted structure as the legs and an inserted gusset and elasticated waist-band.

21.2 Classes of hosiery machines

Except for the few *Griswold* type hand-turned machines (Fig. 4.4), all hosiery machines are of the *revolving cylinder type*. This arrangement offers the advantages of high revolution speeds, a simplified drive, and the possibility of selectively striping-in yarn from stationary packages placed at fixed feed positions around the cylinder. The garment sequence control must, however, be linked by means of cables and rods (or electronics), using the shortest possible routes, to the various mechanisms at the knitting positions around the needle cylinder without interfering with accessibility to the machine (Fig. 21.1).

The three types of hosiery machines, in order of their increasing complexity and needle bed arrangement, are *single cylinder*, *cylinder and dial* and *double cylinder*.

Ladies' fine-gauge seamless hose and tights are knitted in plain base structure on single-cylinder machines with holding-down sinkers.

Men's, ladies' and children's socks and half-hose in broad rib or purl (links-links) base structure are knitted on double-cylinder machines. Men's dress socks are broad

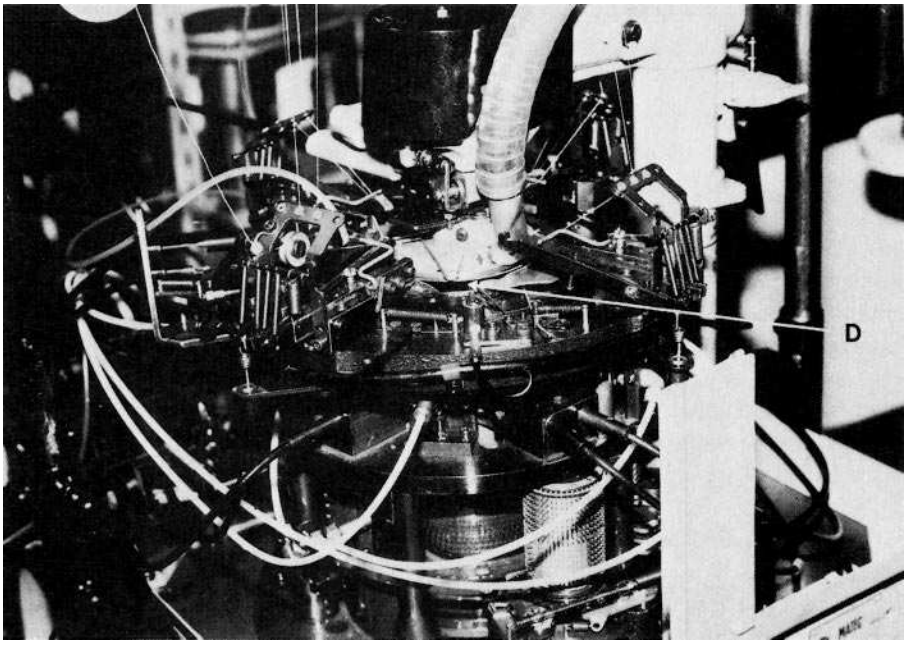

Fig. 21.1 Close-up view of the knitting head of a 4-feeder seamless hose machine (D = Dial) [Walter Bullwer].

Skechers EX1050
Skechers v Nike

rib socks with a reciprocated heel and reciprocated toe that has been closed by linking. A typical machine specification would be 4-inch diameter, 168 needles.

Sports and casual socks in a plain base structure are now usually knitted on single-cylinder machines with holding-down sinkers.

More formal simple rib socks may be knitted on cylinder and dial rib machines termed '*true-rib*' machines. These machines have half the number of needles in the dial as are in the cylinder, with every second cylinder needle opposite a dial needle. For that reason only simple ribs such as 1 × 1, 2 × 1, 3 × 1, etc. can be knitted, not broad ribs such as 6 × 3 rib. True rib machines knit a more balanced 1 × 1 rib than double-cylinder machines, whose needles in the top cylinder do not draw their loops with as strong a yarn tension as those in the bottom cylinder.

21.3 Gauge

On hosiery machines the *gauge* is usually expressed as *diameter and total number of needles*:

A 4 inch × 400 needle *single-cylinder* ladies' seamless hosiery machine will have 400 needles to knit plain. (NB: the number of needles may be slightly more or less than 400 in order to fit a particular mesh structural repeat exactly around the leg).

A 4 inch × 200 needle *cylinder and dial* machine will have 200 cylinder needles and 100 dial needles. Every second cylinder needle is gated in line with a dial needle and can only knit as 200 cylinder needles in plain structures. For 1 × 1 rib, the 100 dial needles knit in co-operation with the alternate 100 cylinder needles.

A 4 inch × 200 needle *double-cylinder* machine will have a total of 200 needles to knit plain stitches in the bottom cylinder, or, when arranged for 1 × 1 rib, will have 100 needles knitting plain in the bottom cylinder and 100 needles knitting rib in the top cylinder.

As well as the machine gauge, the *needle gauge*, i.e. thickness and size of needle hook, is also a consideration.

21.4 The early development of ladies' fine-gauge hosiery machines

Circular machinery entered hosiery production inauspiciously during the nineteenth century, knitting fabric that was then cut and seamed into cheap 'leg bags', onto which heels, soles and toes were later hand-frame knitted.

The development of specifically designed circular hose machines followed from patents such as those of *Newton* in 1857 and *McNary* in 1860. These described how seamless heel and toe pouches could be knitted as part of the tubular leg structure by selectively taking needles in and out of action during reciprocation.

During the 1870s, the patents granted to *Henry Griswold* virtually perfected the hand-powered sock machine. This world-famous small-diameter latch needle machine has a single rotating cam-system (and yarn feed) that can be oscillated (reciprocated) for heel and toe pouch knitting, and an attachable dial needle holder for knitting the integral rib tops at the start of the sock.

Much of the early development of large- and small-diameter *single-cylinder* latch needle machinery occurred in the USA. For many years, both in Britain and the rest of Europe, the products of these machines were considered to be inferior in quality

Skechers EX1050
Skechers v Nike

to those knitted on bearded needle machinery or (later) latch needle machines with two needle beds.

Important developments in circular hosiery machinery included:

- the introduction of power;
- the use of holding-down sinkers;
- the automatic control of mechanical changes and operations;
- a change of machinery design from rotating cam-boxes to revolving cylinders; and
- the gradual replacement of bearded needles by latch needles as their fineness and reliability improved.

The first powered circular hose machine was produced by *Shaw* in 1879, and in 1887 pickers were added to automatically knit heel and toe pouches. By 1900, most mechanical operations could be automatically controlled by the machine, apart from welt turning and toe closing. *Scott and Williams* patented the former on their Model 'K' machine in 1915 and the latter, less successfully, over forty years later in 1967.

21.5 The advent of nylon

With only yarns such as rayon, silk, cotton and worsted available for knitting, bagginess (particularly around the ankle) of ladies' fine gauge circular knitted seamless hose caused them to be regarded as a cheap but inferior rival to the more shapely fully fashioned hose knitted on the straight bar frame. The former was even provided with an imitation of the fashionable seam at the back of the leg. There was thus little encouragement for circular hose manufacturers to re-equip and, in 1946, only a quarter of circular hose machines knitting in British factories could produce an automatic in-turned welt; and most machines had only a single feed.

In the same year, nylon, the ideal stocking yarn, became plentifully available. Not only was it a cheap, strong, fine and uniform yarn, it had the major asset of being thermoplastic so that articles knitted from it could be heat-set into shapes whose form they would permanently retain, provided that the setting temperature was never exceeded during washing and wearing.

21.6 Trends in fine-gauge hosiery since 1956

The straight bar frame was, at first, the main beneficiary of the huge demand that was unleashed for nylon stockings. This caused machine gauges to become progressively finer, and productivity to rise dramatically, as operations became more automated and efficient and knitting speeds increased.

For the circular hose machine, the advent of nylon meant that a combination of stitch- and heat-shaping could now produce a stocking with satisfactory leg-fitting properties, provided ladies' fashion would accept it.

Fashion intervened in the late 1950s, when, with skirts getting progressively shorter, the younger and then all generations, opted for the *'bare leg' look* in preference to the seamed leg.

Similarly, in 1966, the advent of the mini skirt brought the welted tops of

Skechers EX1050
Skechers v Nike

seamless stockings into view and the conversion from stockings to more comfortable and less-noticeable *self-supporting tights* began.

For the seamless hosiery industry, the period from 1956 became one of dramatic and revolutionary changes in knitting, making-up, dyeing and finishing, marketing, and fashion. Although hiccups are produced by swings of fashion, the following trends are noticeable:

- the simplification of styles, knitting machines, and making-up;
- the increasing automation of making-up operations, handling, and transportation; and
- higher knitting speeds and/or numbers of feeders.

In twenty years there was a five-fold increase in productivity per knitting machine. Increasingly fierce competition and drastic reductions in the prices of stockings and tights have transformed the overall image from one of fashionable luxury and glamour (only about 8 to 10 per cent of ladies' tights production is patterned) to that of a mass-produced commodity article.

Some of the specific developments that occurred during this period are now discussed.

The slow and expensive reciprocated and linked-closed toe was replaced on a twin-feed machine in 1956 by all-circular knitted courses of spliced fabric, which was later cut and seam shaped into a toe.

In the same year, the *Reymes Cole* patent described how the reciprocated heel might also be replaced, in this case, by part-circular knitted splicing courses on selected heel section needles.

In 1961, the four-feed *Billi Zodiac* machine popularised the tube stocking with a patch heel by knitting a stocking in 2 minutes 10 seconds, compared with the 12 minutes taken to knit a stocking with a reciprocated and heel toe on a single-feed machine in the early 1950s. Speeds and numbers of feeds were then gradually increased, with a six-feed machine running at 210 rpm in 1963 and, by 1971, a twelve-feed machine running at 260 rpm.

Today, demands for higher quality and more versatility led to a reduction in the number of feeds so that machines now generally have 4 or 6 feeds and commercial operating speeds of 1000–1200 rpm. Electronic controls have reduced the number of mechanical parts so that less mechanical attention is necessary. At the same time, machine manning has been improved so that one person may now run 60–80 machines, whilst 5 kilogram yarn packages can reduce yarn package replacement to 5-day intervals.

The *Matec* HF range of fine-gauge tights machines do not select needles by using levers. Instead, knit or miss selection is obtained by means of a high-frequency current that changes the polarity of a metal plate which, through another element, moves the selector jack into either the knit or the non-knit camtracks. Needle-by-needle selection is achieved at a speed of 1000 rpm.

On a 6-feed machine, it is possible to knit tights with 5 colours and any structure in the ground at a speed of 800 rpm [1].

Recently there has been an increasing use of *Lycra* and other elastane yarns, in bare or in covered form, at every course or at alternate courses, either by knitting, laying-in or plating. This has not only improved fit and comfort, it has improved wear and thus reduced consumption.

Elasticated medical support hosiery with *graduated compression* has long been available. It allows the blood to flow back more easily in the leg. Advances in the

Skechers EX1050
Skechers v Nike

knitting of fine-gauge elasticated hosiery, such as finer yarns and electronic-control of the graduated knitted leg shape, have led to the development of the *Lycra Leg Care* scheme for the fashion side of ladies' fine-gauge hosiery. The scheme is based on objective and measurable standards using *Lycra* yarns. This enables fine-gauge stockings and tights to be made with smooth, comfortable, graduated compression for body-shape control and improved blood circulation. There is a choice of three compression levels – light, medium and firm – based on pressure gradient levels.

One rather unsuccessful development has been the *automatically knitted closed toe*, which was almost immediately replaced by the *cut-and-sew toe* produced by the automatic toe-sewing equipment used during making-up operations.

In seamless hosiery finishing equipment, the dye-boarder, introduced in the early 1960s, replaced, in a single cycle, the separate operations of scouring, pre-boarding, dyeing and post-boarding, thus reducing labour content as well as *pull threads* caused during handling. Today, ladies' hosiery ranges from 7 denier ultra sheers to 70 denier opaques, in such forms as tights, stockings, hold-ups and knee-highs.

21.7 Ladder-resist structures

The fine smooth filaments in plain knit ladies' hosiery structures make them very susceptible to *laddering*. It is therefore important to reduce this tendency without impairing either the appearance or the extension and recovery properties of the structure too greatly [2].

Any stitch that reduces the likelihood of one loop being withdrawn through another (for example tight knitting), or that spreads the tension (knitting on alternate needles), will produce ladder-resist properties from the end knitted last. An alternate knit-and-miss or knit-and-tuck structure will be ladder-proof from the end knitted first.

Float-plated fishnet (Fig. 9.3) is one popular ladder-resist structure; all needles take the fine yarn (for example 15 denier) whereas alternate (or in the case of patterned fishnet – selected) needles rise high enough to take the thicker yarn (for example 30 denier). The two yarns are knitted in *a plating relationship*. This structure is popular for use in stockings to produce an anti-ladder band that prevents ladders from running down from the top of the leg.

1 × 1 Cross tuck is another ladder-resist structure, where alternate needles tuck at alternate courses.

Micromesh is similar although less effective because it contains less tuck stitches. In this structure, the tuck stitches spiral around the leg, reducing light reflectance and presenting an attractive appearance. There is usually a course of all-knitting in between each course of tuck stitches; the notation given in Fig. 21.2 shows the popular *3 × 1 micromesh*.

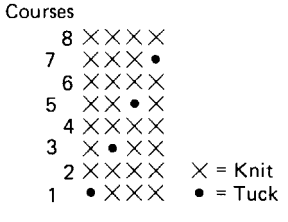

Fig. 21.2 Notation of 3 × 1 micromesh.

Skechers EX1050
Skechers v Nike

21.8 The development of the double-cylinder machine

The first double-cylinder machine was the model XL, patented by *Stretton and Johnson* of Leicester in 1900, which employed double-headed latch needles patented by *Townsend* in 1849 and internally-controlled sinkers patented by *Spiers and Grieves* in 1895. Using dividing cams for disengaging the sliders from the needles, it eliminated the need to knit the rib tops on a separate machine and then to transfer the fabric on a quill ring to the needles of another machine in order to knit the leg.

In 1912, the machine was converted to a *revolving cylinder* type, and in 1920 the first of over 100 000 *Komet* machines was produced. From that year onwards, a wide range of double-cylinder machines has been developed, from high-speed plain models to highly complex machines with extensive patterning capabilities [3,4]. Amongst the range of patterning effects available are three-feed jacquard, links-links, embroidery plating, and terry.

The robust reliability of mechanically-controlled double-cylinder machines has ensured their continued use despite competition from new computer-controlled machines.

21.9 Single-cylinder sock machines

Mechanically-controlled double-cylinder machines of the *Bentley Komet* type used to dominate the manufacture of socks but, with the encroachment of microprocessor controls, the simpler and cheaper single-cylinder machines now account for two thirds of new machinery sales. Factors influencing this trend include:

- Greater pattern scope at increased speeds using mono-magnetic needle selection.
- More colours per course when using motif embroidery plating, with up to 7 colours per course or a total of 21 colours in the sock.
- Ability to knit imitation links-links designs.
- Possibility of knitting new design features such as 4-colour intarsia with terry sole.
- Ability to knit tights with pelerine transfer stitch designs.

21.10 Timing and control of mechanical changes on circular hosiery machines

The application of microprocessor controls has removed the need for mechanical timing chains and control drums on the latest electronically-controlled hosiery machines. The machine's microprocessor memory can accommodate a range of sizes and styles that can be quickly recalled when a change is required.

On mechanically-controlled machines, the changes are timed by the links of a *timing chain* that also control the racking of a *control shaft* to which are attached the control cam-drums and wheels that initiate the major mechanical machine changes (Fig. 21.3).

One complete racking of the chain together with one complete revolution of the control shaft is necessary to produce the length knitting sequence for each hosiery

Skechers EX1050
Skechers v Nike

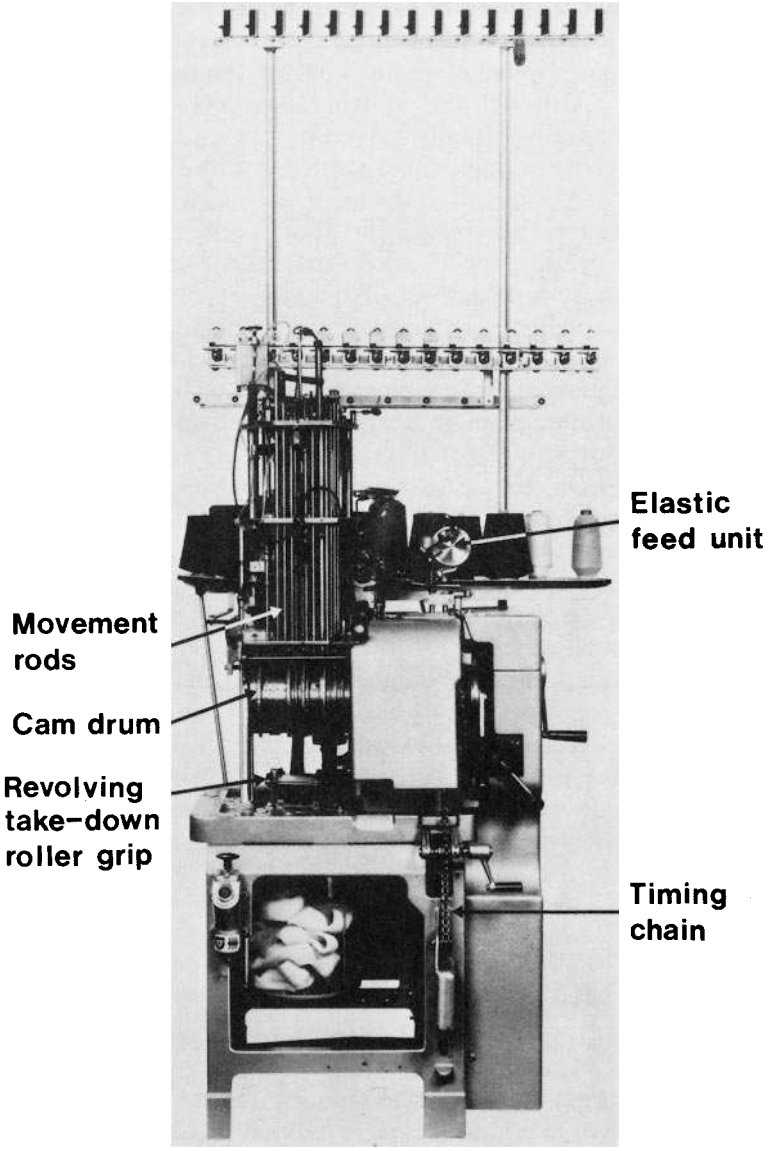

Fig. 21.3 Double cylinder half hose machine [Bentley].

article. Plain links are used purely for providing knitting time between changes whereas movement links have projections or studs to initiate mechanical changes, usually as a result of racking (turning) the cam shaft and its cam drum. Chain saver links have a pin that turns an economiser wheel, saving 23 plain links.

The control cam drum revolves with the control shaft and is divided into a number of tracks, each corresponding to a lever or rod that scans its section. Amongst functions that may be controlled from the tracks are: speed changes, knitting cam changes, pickers, the verge, take-down splicing, and pattern drum racking.

Skechers EX1050
Skechers v Nike

21.11 Adjustment of loop length

On hosiery machines without positive feed, the distance between the top of the needle head at knock-over and the loop-supporting belly of the sinker will determine the length of loop that is drawn.

On single-cylinder machines, the sinkers are in a bed fixed to the head of the needle cylinder so that any raising or lowering of the cylinder will affect the loop length.

A gradual lowering of the cylinder produces *graduated stiffening*. On electronically-controlled machines, this is achieved by step motors which are employed to raise and lower the stitch cams and also for introducing the stitch cams. This is particularly useful on tights machines for precisely placed spliced areas of elastane yarns to give selective comfort support whilst saving expensive yarn.

In single-cylinder tights production, *Matec* has developed the VPS (Variable Profile Stitch Cam). The angular position of the step motor-controlled stitch cam is adjusted to the speed requirements in different parts of the tights. A ten degree difference can enable an increase in speed by 130 rpm in that section of the tights.

On mechanically-controlled machines, levers scanning tracks on the control drum operate through adjustable set-screws to raise or lower the cylinder. Separate tracks on the drum may be responsible for adjustment of the loop length for the waste courses, toe, heel, panel, ankle and foot, graduated stiffening, etc. Graduated stiffening is operated from a rotary eccentric cam that is racked independently of the control shaft and allows the cylinder to be gradually lowered during the knitting of the calf, so that loops gradually become smaller and the leg tube is narrowed.

On double-cylinder machines, loop length adjustment is achieved by adjusting the stitch cams and thus the needle height.

21.12 The double-cylinder slider butt set-out

If a broad rib set-out is used whose repeat is not an exact factor of the total cylinder tricks, the extra non-standard rib panels must be carefully arranged to balance at the heel centre (back of the leg) so that they are less noticeable. It may also be necessary for the foot bottom to be slightly less or slightly more than half the cylinder tricks, in order to balance the rib panels on either side of the foot.

As previously mentioned (Section 7.5.1), sliders have a needle *knitting butt* towards their head and a needle *transfer butt* towards their tail. Generally, the knitting butts are long in the instep half (these are raised out of action during reciprocation) and short in the heel half, in both cylinders.

When arranging the transfer butts it is necessary to understand that the *transfer bolt cams* are gradually introduced in stages so that the longest butts will be used for the first transfer actions, whilst the shortest butts will be unaffected until the cam is fully in action for the last required transfer.

The 1×1 rib top arrangement is obtained by transferring up alternate needles using alternate long butts in the bottom cylinder. When a broad rib leg is required, a second up-transfer may be necessary using short butts on the bottom sliders. In a minimum movement only the necessary needles will be transferred up, whereas with a links-links movement all needles are transferred up. The broad rib wales are achieved by transferring down using long top cylinder butts. Medium butts are used

Skechers EX1050
Skechers v Nike

to transfer down for the heel. Later, short butts are used to transfer down the instep needles still in the top, in order to finish by knitting the toe in plain.

21.13 Production of heels and toes

Three-dimensional 'turned' heel and toe pouches (Fig. 21.4) are knitted in plain so that, in the case of double-cylinder machines, the heel section needles must be *transferred down* to knit from the bottom cylinder. A spring take-up holds the surplus yarn as the needles traverse towards the feed on the return oscillation, whilst a pouch tension equaliser ensures that the pouch fabric is held down on the needle stems.

The pouch is preferably knitted in single feed so that the other feeds (if there are any) are taken out of action, but an additional splicing yarn is striped in for reinforcement. The shape and extent of the spliced section may extend beyond the pouch. Reciprocation of the cylinder is produced by the drive at this point, being taken from the forward and backward oscillation of the quadrant. As the changeover is mechanically complex, oscillatory knitting takes place at approximately two-thirds of the speed of circular knitting.

In socks with reciprocated heels and toes in single feed, over a third of the courses will be in oscillatory knitting and may require over 60 per cent of the machine's operating time, thus making this operation time-consuming and expensive.

During the oscillatory knitting of the pouch, the remaining needles (approximately half) are raised into a high inactive cam-track by the introduction of a cam. This operates only on the long knitting butts allocated specifically to them, so that they retain their loops (for the instep) from the last course of circular knitting.

During narrowing, the leading needle in each direction of oscillation is lifted up to join the other needles in the inactive track by the action of one of two side pickers

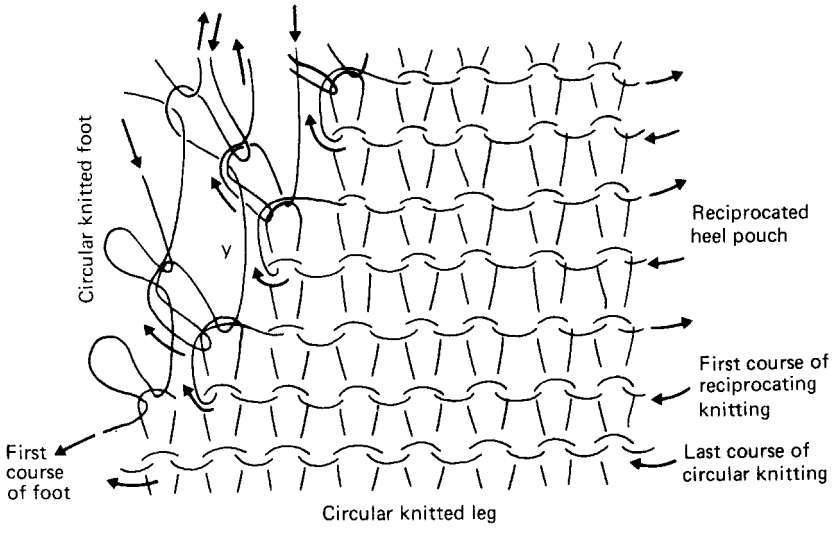

Fig. 21.4 Heel produced by reciprocation.

Skechers EX1050
Skechers v Nike

that are alternately in action according to the direction of oscillation. These pickers operate throughout the oscillatory motion.

During widening, a down picker is introduced that lowers two needles at a time, thus cancelling the effect of the up picker and putting an extra needle into action.

Each of the side pickers has an L-shaped recess and these are positioned facing outwards at the approach into the cam system so that in either direction of oscillation, the knitting butt of the leading heel needle or slider is caught by the recess. The continued movement of the cylinder causes the picker to be moved backwards and, as its movement is restricted, it pivots upwards in its holder to place the butt into the high inactive track; the spring attached to the picker then pulls it down again.

The down picker, when brought into action, moves down from the inactive track bringing two needles down with it each time. It has a recess on each side of its under surface so that two butts can be accommodated in each direction of oscillation. *Lonati* use only one type of picker, which is turned over to act as a down picker during widening. Some machines knit a twin-feed heel and toe. During narrowing two needles at a time are lifted. During widening, up picking continues with only one needle at a time whilst three needles are lowered into action at each side. With this method, a twin-feed heel or toe with acceptable sutures can be knitted in 22 seconds.

In the production of a *standard small heel*, half the needles knit in the heel-section, with narrowing occurring at each side, until only one-third of the needles are left in action. As each needle is lifted out of action, the yarn is automatically wrapped over it in the form of a tuck stitch, which makes the heel join stronger. Widening then takes place until all the heel section needles are brought back into operation, when circular knitting recommences.

A *toe pouch* is knitted in a similar manner. If the heel section needles are used again, the seam will be on top of the toe (as is the case in most socks). If the instep needles are used instead, a reverse toe is knitted, with its seam being underneath (usually preferable in hose).

Many modifications to the basic pouch sequence have been employed, particularly on hose, in order to improve the fit and appearance. In the *Y-heel*, extra fabric is knitted in the centre of the inverted Y suture-line by widening for twelve courses after narrowing to the one-third needles. Narrowing then occurs to one-third needles before commencing normal widening.

The *gusset toe* is a reverse toe knitted in a similar manner except that, when the one-third needles are left, a group are re-introduced collectively. Single-needle narrowing then occurs for twelve courses and then the rest of the needles previously collectively widened are lifted out of action and the normal widening picker is introduced. In the *ballet toe*, all the needles are brought collectively into action for a few courses of circular knitting after the needles have been narrowed to one-third. All except the one-third are then collectively raised out of action as normal widening begins.

21.14 Automatic separation

Pneumatic take-down and automatic press-off of seamless hose and socks from single-cylinder machines was a comparatively easier problem to overcome than the automatic separation of half-hose on double-cylinder machines which was achieved

Skechers EX1050
Skechers v Nike

by *Bentley* in 1967. Pressing-off occurs at the point where the draw-thread would normally be introduced when the needles are engaged with the bottom cylinder sliders. The first few needles are raised to non-knit height in advance of the loop-forming position of the main feed so that the yarn from the previous article passes across them under tension and is severed as the sinkers move radially inwards and kink it with their throats.

At the main feed, the yarn for the new article is taken into every needle hook in the bottom cylinder. To ensure that all hooks are open, the needles have extended latches that are opened by the extended pointed ends of the sliders, which receive a rocking motion from cams at the transfer position. During this revolution, alternate needles are transferred to the top cylinder where they knit one course whilst the needles in the bottom cylinder remain in the non-knit track. For the next course, the rib needles enter the welt track and the plain needles are cleared to knit at the main feed for the commencement of the welt.

The Bentley-Solis arrangement [5, 6] employs vacuum suction complemented by a mechanical system to withdraw the separated article from the knitting zone. For reversed take-up, an inner plastic delivery tube then sucks the article upwards through the top cylinder where it drops onto a hinged exit door that automatically opens to allow it to fall into a collection container. The revolving take-down arrangement consists of two independently-operated sleeves positioned, one within the other, at the lower end of the top cylinder, with the inner sleeve protruding below the outer. The fabric is alternately held and pushed downwards by the sleeves, which are lifted and dropped once per revolution by cam action. The inner plastic delivery tube is slightly shorter than the inner sleeve so that it can suck the article upwards and away from the sleeves.

21.15 Seamed toe closing

Linking is the conventional method of toe closing that occurs after knitting during making-up. A slacker course of loops on the instep is joined loop-to-loop to a similar course in the toe pouch, by stitching on a linking machine. This is, however, an expensive, relatively slow and skilled operation.

In *Rosso linking*, the fabric to be joined is guided by a conveyor guide onto dial points and is seamed from opposite sides, but the join is not exactly on one course nor is there an individual 'loop-to-loop' join.

In the case of the *run-down toe*, the toe fabric is knitted in normal circular knitting (possibly with 40-denier instead of 15-denier yarn); it is later seamed from under the foot in an upward curve towards the top of the toe in a single or two-needle three-thread seam. Automatic toe seaming units can turn the hose inside out by means of compressed air, position the hose leg, and then convey it to a seaming head. After seaming the hose on the inside, it is turned back to its correct side. The complete cycle occupies only a few seconds.

21.16 Automatic toe closing on the knitting machine

Many novel methods have been devised for closing toes during the knitting operation. Generally, they have been restricted to single-cylinder sock machines, in coarser gauges, and not double-cylinder sock machines or seamless stocking and

Skechers EX1050
Skechers v Nike

tights machines. They have achieved only limited success against conventional toe closing during post-knitting operations where automated seaming and handling techniques have considerably reduced labour content, time, and costs involved.

The main disadvantages of toe closing on the knitting machine have been one or more of the following: the necessity for a complex adaptation of the knitting machine and its knitting sequence with high capital costs; reduced production speeds; lower patterning potential; poor comfort; unsatisfactory wearing properties; and unconventional appearance. The following methods have been devised to overcome some of these disadvantages:

1 *The rosette toe*. Two types of toe that achieved some success in the late 1960s, were the *Scott and Williams* and the *Duravent* closed toes. Both commenced at the toe with circular knitting to produce a double thickness welt that was restricted to form a *rosette closed toe*, either by twisting the fabric tube or by wrapping yarn around it. These methods failed because of the unconventional appearance of the toe and the insecure finish to the welt, which was knitted last.
2 *The true-linked toe*. The appearance and comfort of a *true-linked toe* can now be achieved on a linking machine supplied directly from the knitting machine. The linking machine is either directly mounted on the knitting machine or it is supplied from a bank of machines. One sock is linked whilst the next is knitted. On the knitting machine, the open toe circle of fabric is held on a split dial that folds over to transfer and double-up the loops onto half the dial ready for loop-to-loop linking. Time and costs are saved by not having pre-linking courses, but the unit can add 30 per cent to the cost of the machine.
3 *The Sangiacomo Lin Toe*. This method (Fig. 21.5) uses the standard knitting sequence of *welt first*, *toe last*. It can be fitted to cylinder and dial true rib machines. The dial with its double loops is transferred to a *Frullini* patented, flange-mounted linking machine at the same time as the next sock is being knitted. The time required to transfer a sock for linking is 6–7 seconds. Knitting of the next sock occurs virtually immediately. Also, time and yarn are saved by not having additional pre-linking courses.

   A true stitch-by-stitch single-course linked seam is on the outside and a flat seam is next to the foot. The finest gauge limit is probably 200 needles × 4 inches diameter. The toe-closing unit, which can be retro-fitted to some sock machines, costs approximately 30 per cent extra. To reduce the cost of linking, after the sock has been knitted it can be robotically transferred to an *off-machine mini-linker* which can close the toes of socks from a number of machines [7].
4 *The knitted closed toe.* Knitted toe closure involves commencing at the toe and joining the instep needle loops to the toe loops. As the welt is knitted last, there is a problem in obtaining a neat, secure finish. Patents for a swivelling transfer dial to produce loop-to-loop knitted toe closure were first taken out by *Giulano Ugolini* in the early 1960's [8].
5 *The Matec Closed Toe*. With this system, the closing line on the outside of the sock is practically invisible and the result is equal to that achieved by hand linking. The time taken to close the toe is 5–6 seconds. All yarn waste is eliminated. It is possible to retrofit this to all *Matec* single-cylinder machines.

   The toe set-up course is picked up by the half-dial transfer elements and is knitted in a reciprocating manner on the sole half needles. As soon as the toe is

Skechers EX1050
Skechers v Nike

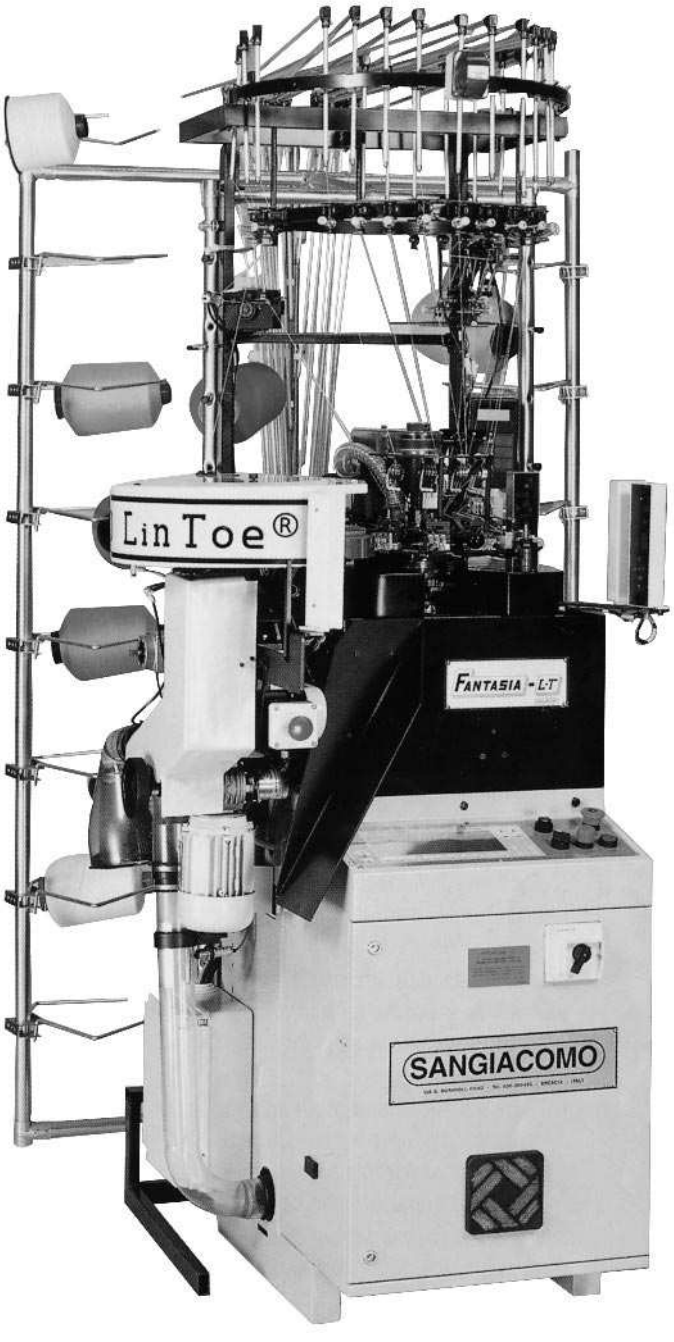

Fig. 21.5 Lin Toe toe-closing on the machine [Sangiacomo].

knitted, the dial rises further and swivels, bringing its set-up course over the cylinder needles of the instep half of the foot. The loops are then transferred from one half of the cylinder to the other. An externally-mounted crochet hook closes the toe. The foot length is then knitted on the full diameter.

Skechers EX1050
Skechers v Nike

6 Another method employs the dial as the transfer element, enabling the set-up course to be run by the dial, stitch-by-stitch, as the toe pouch is knitted by reciprocation. The toe fabric is then transferred to the other half of the needles that knit to close the toe. Afterwards, circular knitting commences for the foot.
7 *The Conti Florentia Air Toe*. This system produces a random linked appearance, not exactly loop-for-loop. It is therefore most suitable for coarser gauge sports socks. It is simple and virtually invisible on the outside of the sock. At the start of the toe, two courses of covered elastic are knitted by reciprocation. Sufficient fabric is then knitted to transfer across to the other half of the cylinder. Special hooked sinkers engage with the fabric aided by air jets which blow down onto the fabric. As the cylinder turns, the new yarn is knitted into the elastic yarn course.

21.17 Tights

Early versions of tights were made by seaming a hose leg to each leg of a pair of panties. Today, the conventional method of constructing tights is to knit two long seamless hose legs (having about 2000 courses). In the making-up operation, the legs are '*toe-closed*'. A slit is then cut vertically down the centre of the inner side of the upper (body) section of each leg. The slits are then opened so that the left side of one leg slit can be seamed to the right side of the other leg slit in a single operation. This is termed the '*line closing*' or '*U-seaming*' operation and it converts the top of the two tubular legs into one large tubular tights body. The top of the legs may contain the knitted-in *elasticated waist-band* or this may be seamed on later. The crotch area may then be cut or burned out so that a shaped gusset (often of knitted cotton fabric) can be inserted and seamed in its place.

21.17.1 Automated seaming

The cost of manual handling and seaming, combined with the static price of the finished article, has encouraged the search for alternative methods of production in the form of *one-piece tights* knitted on the machine. However, at present, increasingly automated tights seaming techniques have proved to be more successful. Unfortunately, there are considerable problems involved in automatically picking-up, orientating, guiding, handling, and sewing one of the lightest, flimsiest, most extensible and unstable of knitted structures. It is therefore essential that the hose legs are in a smooth, flat, undistorted state when they are removed from one operation and presented to the next. With the making-up operations being separate modules serviced by robotic handling devices, it is possible to incorporate different makes of machine as modules and to introduce and remove them as and when required, without interfering with previous or subsequent modular operations.

Whereas previously the hose legs were presented to the automatic seaming operation by a skilled operative, the '*pick and place*' system automatically picks-up and '*double positions*' the garment using two reference points on it [9].

The *Detexomatic pick and place* system uses a pick-up probe involving suction and gripping fingers to collect legs from a revolving basket. A second picker presents the leg to an orientation device, either toe-to-waistband or waistband-to-toe. If it is the wrong way, it will be reversed.

Skechers EX1050
Skechers v Nike

On the *Esox system*, vision detection is used to align the legs for automated tight assembly by detecting and aligning a colour marker in the waist band and the six wales of mesh that indicate the cutting line.

21.17.2 One-piece tights

The various knitted one-piece tights methods normally involve using a hose machine of $3\frac{3}{4}$ to 4 inches (9.5–10 cm) diameter with approximately 400 needles, and knitting a modified tube of fabric. It is necessary to obtain a width of 4 to 5 inches (10–12 cm) for the ankles and a lateral stretch of 16 to 20 inches (40–50 cm) for the body, which may be achieved with textured yarn.

The main problems have involved fit, quality, and the time and cost of the knitting sequence. More specifically, fit and quality problems have included insufficient depth in the body, fabric breakdown under tension at the leg joins, insufficient extension of fabric at the thighs, and an excess of fabric in the crotch section.

Although smaller sizes can be achieved, larger sizes are more difficult and larger machine diameters such as $4\frac{1}{4}$ inches may be used for these.

One of the first types of commercially-produced one-piece tights was patented by *Pretty Polly* in 1968. It consists of a tube started at one toe and leg, with a wider body section in the centre, and terminated by knitting the other leg and toe. A slit is made down the wales on one side of the body section, which forms the opening for the elasticated waist section, whereas the other side of the body section becomes the under leg-crotch section as the tube bends into a *banana* shape.

Billi (*Matec*) modified this concept to achieve a better shape by introducing part course sections on the crotch side of the body section. This was combined with graduated sections of multiple tucks on a 1 × 1 knit/ tuck basis, which decrease in number towards the waist opening, which is a rectangle with a knitted-in elastic waist band. With this technique, a 'complete' panty-hose (pair of tights) can be knitted on a *Zodiac* eight-feed machine in approximately 3 minutes.

Other methods have involved reciprocation in the body section and in the case of the *Samo Panty-Sol*, one half of the waist band and panty is knitted in each of the two cylinders of a special double-cylinder machine; afterwards one leg is knitted in each cylinder with normal circular knitting.

The prototype *GL one-piece tights* system is the most recent development, taking 2 to $2\frac{1}{2}$ minutes to knit a pair of tights without closed toes. The Italian hosiery manufacturer *Golden Lady* holds the international patents and know-how to the GL one-piece knitted tights project (Fig. 21.6). The machine consists of two needle cylinders, each of 400 needles, and 4 feeds separated by a V-bed flat needle bed with 200 needles. It starts by knitting the two legs simultaneously, one on each cylinder. When knitting reaches the crotch portion, the body is knitted in tubular form on 1000 needles on all eight feeds, which includes the two cylinders and the V-bed.

In the standard 'made-up tights' there are only 800 needles in the body and a portion of this is cut-away during line-closing. The tights have a better fit and, being seam-free, are more comfortable. Single wale needle lines show in the body where the feeders pass between the flat and circular beds. Production rates are comparable with conventionally made-up tights but the cost of seaming machinery and labour is saved.

Skechers EX1050
Skechers v Nike

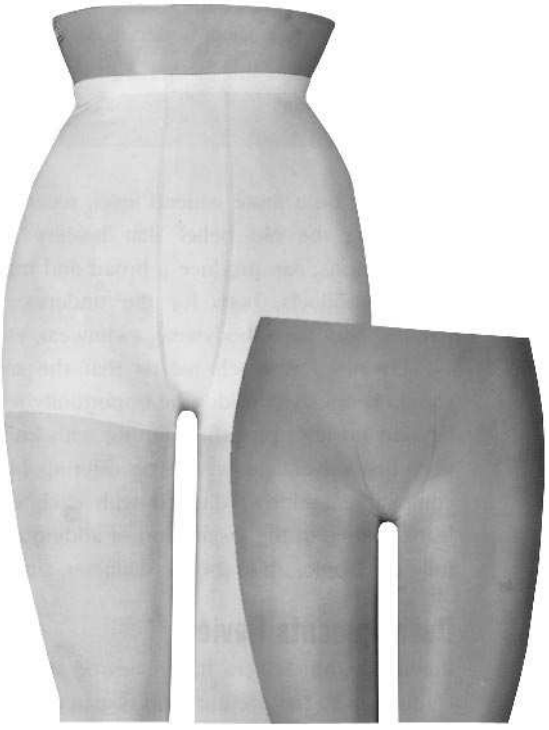

a

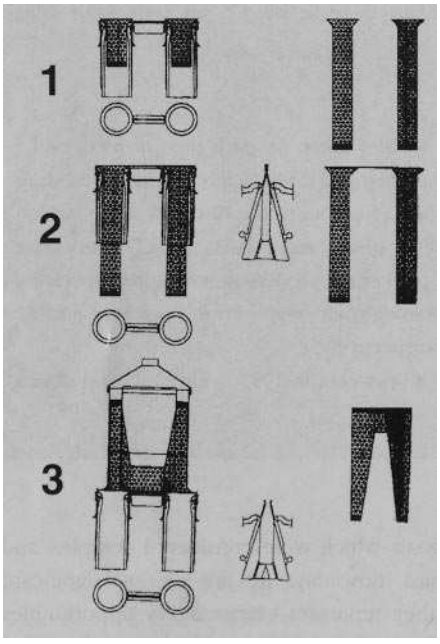

b

Fig. 21.6 GL one-piece tights. Production is started by knitting the two legs simultaneously. When the crotch portion is reached, the body is knitted continuously, in tubular form, either on the sets of cylinder needles or on the flat needle beds. This means that the leg portions are knitted with 4 + 4 feeders (4 feeders for each cylider) and that the body portion is knitted with 8 feeders throughout [*Knitting International*, Nov. 1998].

Skechers EX1050
Skechers v Nike

References

1. MILLINGTON, J., Hosiery needle selection sensation, *Knit. Int.*, (1994), 17–18.
2. LANCASHIRE, J. B., Ladder-resist stitches, *Hos. Trade J.*, (1962), July, 108–10.
3. HURD. J. C. H., Developments in double-cylinder knitting machinery, *Knit. Times Yr. Bk.*, (1974), 92–8.
4. LANCASHIRE, J. B., Knee-length stockings on double-cylinder machines, *Knit. Times*, (1970), 28, Sept. 9, 52–3.
5. ANON., Bentley automatic separation, *Hos. Trade J.*, (1967), March, 98–100.
6. ANON., Reverse take-up for Komets, *Knit. Int.*, (1977), June, 1, 19.
7. Robot linking of sock toes, *Knit. Int.*, (1994), May, 30–1.
8. Sock toe closure patent, (1960s loop to loop), *Knit. Int.*, (1996), Aug., 36–7.
9. Hosiery International, *Knit. Int.*, (1996), Dec., 30, 31.

Further information

ANON., New technology and patents in hosiery, *Knit. Int.*, (1996), May, 33–6.
ANON., Hosiery International IHE Charlotte, *Knit. Int.*, (1996), June, 21–9.
ANON., FAST Preview, *Knit. Int.*, (1998), May, 17–41.
ANON., Hosiery International, *Knit. Int.*, (1997), April, 30–55.
ANON., Hosiery International, *Knit. Int.*, (1998), May, 17–40.
ANON., Toe closure, (Sangiacomo Lin-Toe), *Knit. Int.*, (1996), Aug., 42–4.
BAUER, H. J., Developments in single-cylinder sock technology, *Knit. Tech.*, (1995), July, 210–16.
CANZLER, R., Developments in seamless hose manufacture (IFKS paper), *Hos. Trade J.*, (1961), Nov., 118–21.
ELEY, A. W., *Stockings*, (1953), Hos. Trade J.
GOADBY, D. R., The development of one-piece panty-hose and future prospects, *Knit. Int.*, (1982), April, 44–9.
JOHNSON, M. R., Concepts of future one-piece tights and briefs, *Knit. Int.*, (1974), June, 52–3.
KIRKLAND, J., Milestones in the stockings and tights revolution, *Knit. Times*, (1978), Oct., 36–7.
MILLINGTON, J. GL one-piece pantyhose machine, *Knit., Int.*, (1998), Nov., 17.
MODIG, N., *Hosiery Machines*, (1988), Meisenbach Bamberg.
NEGRI, E., New methods for producing panty-hose, *Knit. Int.*, (1974), Jan., 67–9.
NEGRI, E., Complete one-piece panty-hose, *Knit. Times*, (1974), April, 28–33.
NEGRI, E., The one-piece pantyhose. A review of 60 patent steps., *Knit., Int.*, (1993), May, 14–21.
SCIACCA, F., Past, present and future of toe-closing, F.A.S.T 1995, *Knit. Tech.*, (1995), 6, 389–93.
WIGNALL, H., *Hosiery Technology*, (1968), Nat. Knit. O'wr Assoc., New York, USA.

Skechers EX1050
Skechers v Nike

22

Aspects of knitting science

22.1 Knitted loop-shape and loop-length control

Weft knitted structures, especially those used for hosiery, knitwear and underwear, have unique properties of form-fitting and elastic recovery based on the ability of knitted loops to change shape when subjected to tension. Unfortunately, dimensional changes can also occur during production, or washing and wearing, when problems of shrinkage and size variation can cause customer dissatisfaction and increased production costs.

During the 1950s, HATRA (the Hosiery and Allied Trades Research Association) investigated the problems of knitted garment size variation and created a much clearer understanding of the influence of stitch length on knitted fabric dimensions, which led both to further research in this field and to the practical application of this knowledge in production. *Doyle* [1] emphasized the relationship between stitch length and fabric dimensions when, in plotting stitch length against stitch density for a wide range of dry, relaxed, plain weft knitted structures, he showed that, irrespective of yarn type or count or of machine type or gauge, the points lay close to a general curve. HATRA was thus able to establish three basic laws governing the behavior of knitted structure:

1 Loop length is the fundamental unit of weft knitted structure.
2 Loop shape determines the dimensions of the fabric, and this shape depends upon the yarn used and the treatment that the fabric has received.
3 The relationship between loop shape and loop length may be expressed in the form of simple equations.

The acceptance of these rules has encouraged the introduction of yarn loop-length measuring and yarn feed control devices, has accelerated improvements in shrink-resist and fabric relaxation treatments, and has provided a basis for the theory of knitted fabric geometry.

Skechers EX1050
Skechers v Nike

22.2 Loop length

Loop lengths combine in the form of course lengths and it is these that influence fabric dimensions and other properties, including weight. Variations in course length between one garment and another can produce size variations, whilst course length variations within structures (particularly when using continuous filament yarns) can produce horizontal barriness and impair the appearance of the fabric.

With the exacting demands of modern knitting technology, the need to maintain a constant loop length at one feed for long periods of time between one feed and another on the same machine, and between different machines knitting the same structure has become of major importance in the control of fabric quality. This requirement has encouraged the development of yarn feed measuring and control devices.

Under normal circumstances, about 15 per cent of the yarn drawn into a newly-formed loop is actually robbed from already-formed neighbouring loops. Although a machine may be set to knit a specific stitch length, fluctuations in yarn or machine variables can affect yarn surface friction or yarn tension and ultimately influence yarn input tension at the knitting point. As a result, the ratio of 'robbed back' to newly-drawn yarn changes and this alters the size of the knitted loop.

Course length measurements can be obtained by unroving the yarn from a knitted fabric. This is time consuming, destructive of material, and only provides information after knitting. Two types of meter may be employed to monitor yarn feed during knitting – yarn length counters and yarn speed meters – which may be considered to be respectively analogous to tachometers and speedometers in cars.

The yarn length counter is simplest in construction, providing a reading of the amount of yarn fed in a certain time period. It is particularly suitable for attaching to a moving yarn feeder on a circular revolving cam-box machine. After a specific number of machine revolutions, the machine is stopped to enable the yarn length reading to be taken; this is then divided by the number of knitting machine revolutions in order to obtain the course length for that feed.

The yarn speed meter may require calibrating and provides a direct reading of the rate of yarn feed, usually in metres per minute, whilst the machine is running. The meter may be hand-held and can be used on a revolving cylinder machine without the need to stop it. To obtain the course length it is necessary to divide the reading by the number of knitting machine revolutions per minute.

Monitoring every feed of a large diameter multi-feeder machine is time-consuming and provides no guarantee that the course length will remain constant after measuring. *Positive feed devices* are designed to overcome this problem by positively supplying yarn at the correct rate under low yarn tension to the knitting point instead of allowing the latch needles or loop-forming sinkers to draw loops whose length could be affected by varying yarn input tension. HATRA introduced the nip roller positive feed device during the early 1960s. It consists of a lower roller driven by gearing at a speed directly proportional to the machine speed, with an upper, freely running, weighted roller turning in contact with the yarn completing the nip.

Devices of this type tended to have complicated drive linkages, required a complex yarn path, and needed careful adjustment at each device if uniformity of course length was necessary at a number of feeds. For these reasons, the cheaper, simpler, more adaptable, tape positive feed system developed by *Isaac Rosen* proved

Skechers EX1050
Skechers v Nike

to be more acceptable. A continuous tape driven from the machine drive by a single pulley encircles the machine above the feeders and provides identical and constant feed for any yarn threaded through the nip it forms with a free-running feed wheel at each feed position (Figures 13.12 and 22.1). On clockwise revolving machines, the yarn passes from its package into the right-hand side of the tape/wheel nip and on leaving the nip on the left it passes down through a detector to the feeder. The faster the tape speed relative to the machine speed, the faster the rate of yarn feed and the longer the resultant course length. The tape speed is altered by adjusting the scrolled segments of the drive pulley to produce a larger or smaller driving circumference.

Punto di roma, *milano rib* and *double pique* require much longer course lengths at the feeders where most needles knit than at the other feeders. For structures of this type, up to four tiers of tapes, each driven at a different speed by a different diameter drive pulley, can be accommodated. Facilities for yarn disengagement are provided and sometimes the yarn is guided around the wheel in a coil to prevent slippage.

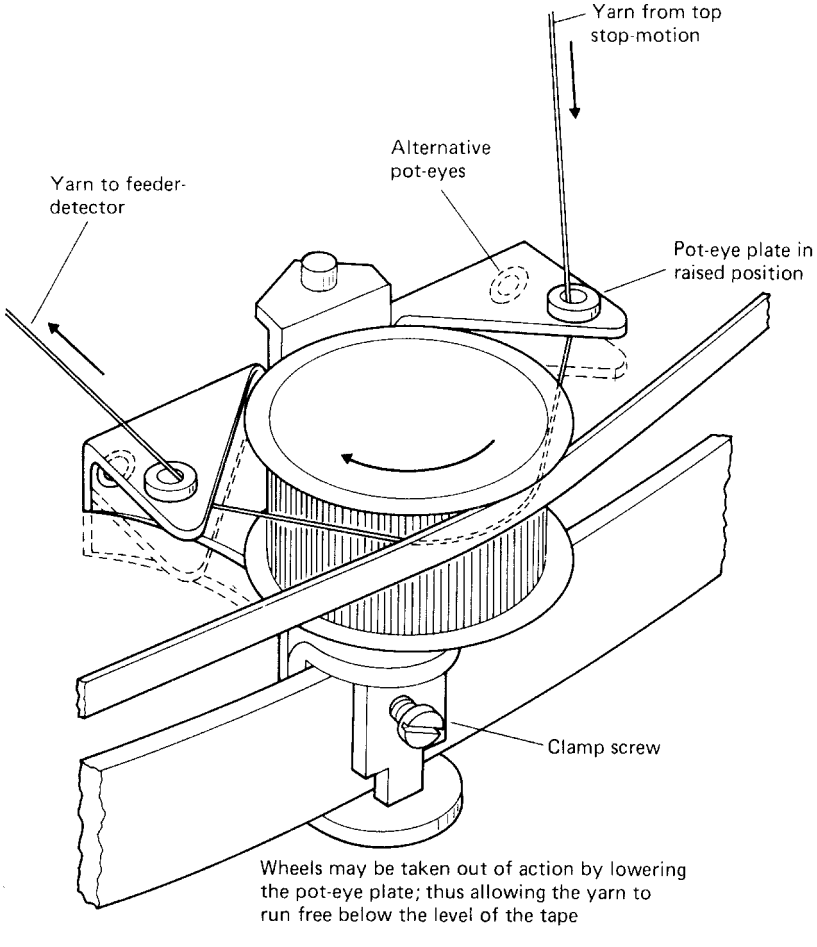

Fig. 22.1 Trip-tape positive feed.

Skechers EX1050
Skechers v Nike

Tape positive feed is generally only suitable for structures having a maximum of four different course lengths and requiring a constant course length at each feeder, but some small-area jacquards and diagonal twills can be produced with it. Large-area jacquards and similar structures whose individual needle selection causes large fluctuations in feed rate requirements (both between feeders and at the same feeder from one machine revolution to the next) cannot be supplied from positive-feed devices.

The other type of yarn furnishing device is the *storage feeder* (Fig. 17.1), which supplies yarn at a uniform tension rather than at a uniform rate of feed and is thus suitable for a wide range of yarn feeds. It may also be used for supplying patterning and weft insertion yarns on some warp knitting machines. Yarn is withdrawn from the package and wound tangentially as equally-spaced coils on a 'store'. Demand at the knitting point causes axial withdrawal of yarn from wraps at the opposite end of the store.

On one design, the spool rotates to wrap the yarn at the top of the store and a lightweight circular plastic comb ensures controlled take-off tension from the base of the store. An inclined disc resting over the wraps senses when they have reached a minimum and switches on the electric motor for the spool drive. It later switches the motor drive off when the required maximum number of wraps have been produced. On another design, the yarn input is through the centre of a stationary spool, with a rotating disc winding the yarn on at the base of the store, the coils being moved upwards by reciprocation of the spool surface. Yarn stop motions and indicator lights are fitted to most units.

A further development is the combination of positive feed and storage feed with a choice of mode available by means of a clutch. With this design, even for positive feed, the tape, which has punched holes, never contacts the yarn; instead it is used to drive a studded wheel and thus wind the yarn onto the store.

Storage feeders provide a store of yarn as the machine stops after a yarn breakage, so it is possible to simplify the yarn path and eliminate the top stop detectors. It is also possible to place yarn packages on supply creels separate from the machine because the storage feeds can compensate for a variation in yarn tension produced by a difference in the angle of the path.

Structures produced with constant and identical course lengths may have a differing or impaired appearance if the allocation of the course length between the knitting elements, and therefore between the components of the stitch structure, varies. Factors that can cause a variation include element timing, element gauge in relation to machine gauge, and the depth of knock-over of one needle bed compared to the other. This effect can be magnified or minimized by the type of structure and yarn, the machine gauge, and the type of relaxation and finishing treatment.

22.3 Warp let-off

Loop length is equally as important in warp knitting as in weft knitting. In the form of run-in, it is determined by the warp let-off which is either negative or positive. In the first arrangement, tension on the warp causes it to be pulled from the beam as it turns against a controlled friction. The mechanism is self-compensating, releasing warp on demand. An overall increase of run-in is obtained by increasing the speed of the fabric take-up rollers, which increases the tension.

Skechers EX1050
Skechers v Nike

In the second arrangement, the warp beams are positively driven to deliver a predetermined run-in. The surface speed is monitored so that, as the beam circumference decreases, the beam drive speed is increased to maintain a uniform rate of let-off. The arrangement must also be capable of catering for fluctuating let-off requirements in patterned fabrics. Tension fluctuations that occur during the knitting cycle are compensated by spring-loaded tension bars over which each warp sheet passes in its path to its guide bar.

On multi-guide bar raschel and tricot lace machines, the spot beams that supply the partly-threaded pattern guide bars are completely negatively turned. These light-weight beams turn easily and have a three-spoked star attached to one end on which small weights are placed and positioned in order to ensure balanced rotation. At the other end, weights attached to a collar provide controlled friction.

An intermittent negative-brake-type let-off may be employed on slow speed machines (below 600 cpm) that are knitting fabrics from full-sized beams. The friction of a belt brake restrains the beam rotation until the warp tension is sufficient to cause the tension bar to be lowered, which in turn lifts the belt, allowing the beam to turn freely.

On high-speed raschel and tricot machines, the lightweight tension rails are completely separate and can oscillate rapidly at high knitting speeds. Each warp beam shaft has a separate positive drive and warp-speed-to-machine-speed adjustment arrangement (Fig. 22.2). A machine-driven 'nut' and a warp driven 'bolt' are 'fast screwed' together, so that when the bolt turns at a different speed it moves sideways, moving a steel ring sideways as it transmits the drive between two opposed cones (3). The slowest beam speed is achieved with the ring on the smallest circumference of the lower (driver) cone transmitting to the largest circumference of

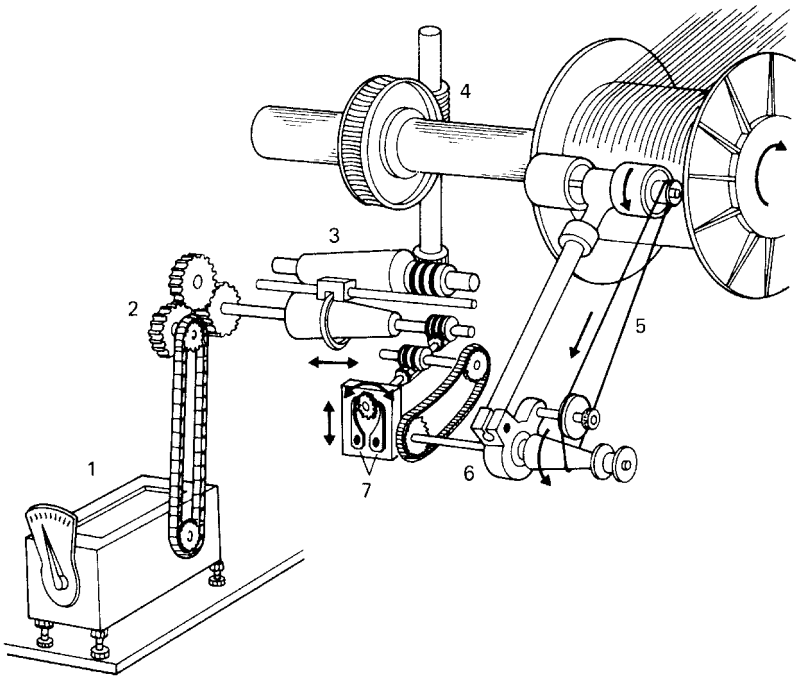

Fig. 22.2 Warp let-off regulator.

Skechers EX1050
Skechers v Nike

the higher (driven) cone. As the warp beam decreases, the ring is gradually progressed towards the largest circumference of the lower cone. The upper cone shaft drives a vertical shaft through bevel gearing and its worm (4), then drives the worm wheel of the warp beam shaft.

The ring can adjust in either direction, controlled by a two-way rackwheel, dependent upon either one of two side racking pawls on a slide (7) that is moved by the 'bolt'. The bolt spindle shaft (6) is driven by a belt (5), from a metering roller driven by contact with the warp of the beam surface. The 'nut' shaft is driven at a constant machine speed by the lower cone shaft.

A change gear system (1), positioned between the main machine drive shaft and the lower cone shaft, enables the gearing to be altered to produce different run-in rates. A clutch arrangement can be employed to alter the warp drive speed, if required for patterning purposes, or to disconnect the drive in interrupted warp let-off sequences.

Karl Mayer have now developed a computer control unit that, from fabric parameters inputted via a keyboard, automatically regulates the warp let-off of the machine. The computer receives the machine data pulses from encoder emitters on the warp beam shafts and the main machine shaft. Control data computed by the system is then transmitted as pulses to the individual warp beams to drive a series-wound d.c. motor and worm gearing [2].

22.4 Weft knitted fabric relaxation and shrinkage

Changes of dimension after knitting can create major problems in garments and fabrics, especially those produced from hydrophilic fibres such as wool and cotton. Articles knitted from synthetic thermoplastic fibres such as nylon and polyester can be heat-set to a shape or to dimensions that are retained unless the setting conditions are exceeded during washing and wearing.

In the case, of wool fibres, dimensional changes can be magnified by felting shrinkage. When untreated wool fibres are subjected to mechanical action in the presence of moisture, the elasticity and unidirectional scale structure of the fibres causes them to migrate and interlock into a progressively closer entanglement. Eventually, the density of the felted fabric restricts further fibre movement but, long before this point, the fabric properties (including appearance) will have been severely impaired. Fortunately, it is now possible to achieve a shrink/felting-resist finish in wool yarns during spinning so that, as with cotton yarns, little yarn shrinkage will occur during washing and wearing.

Knitted fabrics tend to change dimensions in width and length after being taken off the machine, even without yarn shrinkage, indicating a change of loop shape rather than of loop length. During knitting, the loop structure is subjected to a tension of approximately 15–25 grams per needle from sources such as the take-down mechanism and, in the case of fabric machines, the width stretcher board. Unless the structure is allowed to relax from its strained and distorted state at some time during manufacture, the more favourable conditions for fabric relaxation provided during washing and wearing will result in a change of dimensions, leading to customer dissatisfaction.

In theory, knitted loops move towards a three-dimensional configuration of minimum energy as the strains caused during production are allowed to be dissipated so that eventually, like all mechanical structures, a knitted fabric will reach a

Skechers EX1050
Skechers v Nike

stable state of equilibrium with its surroundings and will exhibit no further relaxation shrinkage.

Unfortunately, there are a number of states which may be achieved by different relaxation conditions, such as dry relaxation, steaming, static soaking, washing with agitation, centrifuging, and tumble drying. These states are difficult to identify, define, and reproduce because friction and the mechanical properties of the fibres, yarn, and structure can create high internal restrictive forces and thus inhibit recovery. However, agitation of the knitted structure whilst it is freely immersed in water appears to provide the most suitable conditions for relaxation to take place as it tends to overcome the frictional restraints imposed by the intermeshing of the structure.

A satisfactory relaxation technique applied during the finishing of cotton fabric in continuous length form is the compacting or compressive shrinkage technique. The fabric is passed between two sets of roller nips, with the feed rollers turning at a faster rate than the withdrawing rollers so that the courses are pushed towards each other and the fabric is positively encouraged to shrink in length. This technique can create difficulties with interlock fabric, which tends to buckle outwards three-dimensionally to produce ripples on the surface known technically as 'orange peel'.

22.5 Knitted fabric geometry

Early concepts of fabric geometry were based on models having maximum cover, so that adjacent loops touched each other with a constant ratio of stitch length to yarn diameter. Doyle [1] initiated a new approach to fabric geometry by deriving his concepts from an interpretation of experimental data. He showed that for a range of dry, relaxed, plain weft knitted fabrics, stitch density could be obtained using the formula $S = k_s/l^2$, where S is stitch density, l is loop length and k_s is a constant independent of yarn and machine variables.

Munden [1] took this work a stage further in 1959, with experimental results that indicated that the linear dimensions as well as the stitch density for a wide range of thoroughly relaxed, plain knitted, worsted yarn fabrics were uniquely determined by their stitch length and that all other variables influenced dimensions only by changing this variable.

He suggested that, in a relaxed condition, the dimensions of a plain knitted fabric are given by the formulae;

$$\text{cpi} = \frac{k_c}{l}$$

$$\text{wpi} = \frac{k_w}{l}$$

$$S = \frac{k_s}{l^2}$$

$$\frac{\text{cpi}}{\text{wpi}} = \frac{k_c}{k_w} = R$$

where R = loop shape factor.

Skechers EX1050
Skechers v Nike

His k values for plain worsted fabrics in dry and wet relaxed states were supplemented later by values proposed by Knapton for a 'fully relaxed' state that required agitation of the fabric. To achieve this state, it was suggested that the fabrics be wetted out for 24 hours in water at 40°C, briefly hydro-extracted to remove excess water, and tumble dried for 1 hour at 70°C.

The k values for the three states were as follows:

	Dry relaxed	Wet relaxed	Fully relaxed
k_s	19.0	21.6	23.1
k_c	5.0	5.3	5.5
k_w	3.8	4.1	4.2
R	1.3	1.3	1.3

It is now thus possible to pre-determine the fully-relaxed dimensions of shrink-resist (felting-resistant) treated plain knitted wool fabric before knitting. Similar experimental work has been carried out on the relaxed dimensions of rib, interlock and some double-jersey structures, as well as some structures knitted from cotton yarns. It is suggested that for complex structures, the loop should be replaced by the structural knit cell as the smallest repeating unit of the structure

Most theoretical models of knitted loops are based on an adaptation of a geometrical shape known as an 'elastica'. This is the shape that a slim body such as a uniform rod will assume when buckled by the action of forces. Munden has suggested a relaxed configuration so as to achieve the minimum bending of the yarn. The widest part of the loop coincides with the narrowest part of the feet above it. The theory is, however, complicated by such factors as the three-dimensional shape of loop structures, the jamming of loops, yarn friction, and the pre-setting of loop shapes. Fabric compactness when expressed as a factor is the ratio between the yarn diameter and its loop length in the structure. It is not an absolute value and does not refer to the area occupied by the loop, so the state of relaxation of the structure does not affect the ratio. It is thus possible to have two fabrics with the same compactness, one with a small loop length and fine yarn count and the other with a large loop length and heavy yarn count. Compactness is an important fabric property that influences durability, drape, handle, strength, abrasion resistance, dimensional stability and, in the case of wool, felting behaviour.

22.6 Tightness factor

Munden first suggested the use of a factor to indicate the relative tightness or looseness of plain weft knitted structure, to be used in a similar manner to that of the cover factor in the weaving industry. Originally termed the *cover factor* but now referred to as the *tightness factor* (TF), he defined it as the ratio of the area covered by the yarn in one loop to the area occupied by that loop.

The total area covered by yarn is: $S \times l \times d$, if l is loop length in mm and d is yarn diameter in mm (assuming the yarn to have a circular cross-section and the fabric to be theoretically flat and not three-dimensional).

Skechers EX1050
Skechers v Nike

Introducing the expression $S = k_s/l^2$, the area covering 1 cm^2 of fabric is:

$$\frac{k_s \times l \times d}{l^2 \times 100} = \frac{k_s \times d}{100l}$$

A correction for the four areas of each stitch covered by two thicknesses of yarn is then necessary, together with an expression of yarn diameter in terms of linear density.

When comparing structures of the same type and yarn in similar states of relaxation, it is possible to use the simplified formula;

$$\text{TF}, K = \sqrt{\frac{\text{tex}}{l}} \text{ in SI units}$$

For most plain fabrics knitted from worsted yarn the TF ranges between 1.4 and 1.5.

The TF in Imperial units is:

$$K = \frac{1}{l\sqrt{N}}$$

where N is the worsted count and l the loop length in inches.

22.7 Robbing back

Knapton and Munden suggested the phenomenon of 'robbing back' to be the reason why the measured loop length in a knitted structure is smaller than the theoretical loop length when calculated from the depth of the stitch cam setting, as well as the reason for fluctuations in input tension producing large variations in loop length.

As the needles descend the stitch cam, the tension required to pull yarn from the package increases rapidly and it becomes easier to rob back yarn in the opposite direction from the already-formed loops of needles further back that are then beginning to rise from their lowest (knock-over) position.

With reference to Fig. 22.3, it was suggested that, under the dynamic conditions of loop formation, yarn tension increases (according to Amontons' Law of Friction) as it passes over the knitting elements from point A. Robbing back occurs from needles on the other side of the stitch cam. The lowest point of tension is reached at B. The tension on the yarn is determined by the yarn/metal friction and the number of angles of yarn wrap. Thus, a two-fold increase in yarn/metal friction can cause a six-fold increase in maximum knitting tension.

As robbing back reduces tension, flat-bottom cams would obviously be undesirable and a cam angle shape of 60 degrees was preferable to one of 45 degrees because the number of yarn/metal contacts was reduced. It was further proposed that smoothly designed, non-linear camming with a pressure angle of greater than 50 degrees could provide smooth acceleration of needles for much higher knitting speeds. Camming of this type has been incorporated into some simple high-speed single-jersey machines but it requires adaptation for more complex and alterable cam arrangements.

Skechers EX1050
Skechers v Nike

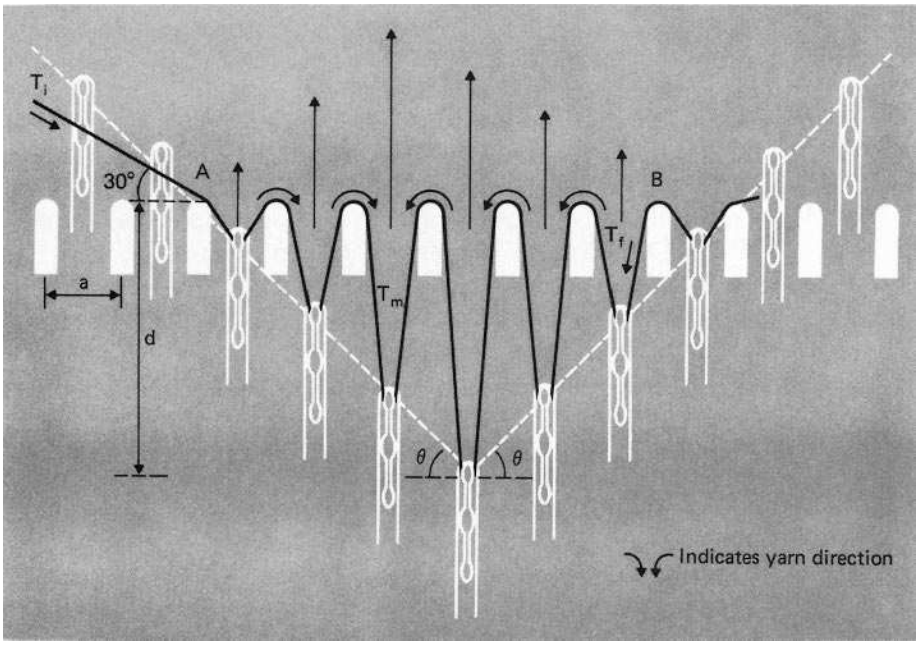

Fig. 22.3 Model of weft-knitted loop formation indicating the mechanism of 'robbing-back' and the build-up in yarn tensions acting on the needles.

22.8 Needle bounce and high-speed knitting

On circular knitting machines, higher productivity involves faster needle movements as a result of an increase in the number of knitting feeds and of machine rotational speeds. On fabric machines, the machine revolutions per minute have almost doubled and the number of feeders have increased twelve-fold over the past 25 years, so that as many as 4000 courses per minute can be knitted on some plain machines, whilst on some high-speed seamless hose machines the tangential speed of the needles can be more than 5 metres per second.

To achieve this productivity, research and development has been necessary into machine, cam and needle design. The horizontal cam track sections have been reduced to a minimum whilst needle hooks and latches have been reduced in size wherever possible in order to reduce the extent of the needle movement between the clearing and knock-over points.

'*Needle bounce*' is a major problem in high speed knitting. This is caused by the needle butt being suddenly checked by the impact of hitting the upper surface of the up-throw cam after it has accelerated away from the lowest point of the stitch cam. At this moment, inertia at the needle head may cause it to vibrate so violently that it may fracture; also the up-throw cam becomes pitted in this section. Needles passing though in the miss section are particularly affected as their butts contact the lowest part of the cam only and at a sharp angle that accelerates them downwards very rapidly. To reduce this effect, a separate cam is often used to guide these butts at a more gradual angle. The smoother profiles of non-linear camming help to reduce needle bounce and a braking effect is achieved on the butts by keeping the gap between the stitch and upthrow cams to a minimum. For this reason, on some hose

Skechers EX1050
Skechers v Nike

machines the up-throw cam is horizontally-adjustable in conjunction with the vertically-adjustable stitch cam.

The *Reutlingen Institute of Technology* has carried out a considerable amount of research into this problem and, as a result, a new design of latch needle with a meander-shape stem, a low smooth profile, and a shorter hook is now manufactured by *Groz-Beckert* for high-speed circular machines. The meander shape assists in the dissipation of the impact shock before it reaches the needle head, whose shape improves resistance to stress, as does the low profile, whilst the gently-shaped latch is designed to open more slowly and fully onto a cushioned position produced by a double saw cut.

22.9 The Cadratex unit

During take-down, a fabric tube changes its shape from a circular section at the needle bed level to a flattened form at the take-down rollers. To reduce creasing at this point, it is also spread outwards by a specially-shaped former placed inside the fabric tube. Unfortunately, the conventional system creates fabric distortion such as the bowing of striped designs and as the take-down tension is not equal around the needle bed, a higher take down tension is necessary to prevent tuck stitches occurring where tension is low during knock-over. The high take-down tension leads to a greater incidence of cuts and holes in the fabric, wear on the knitting elements, problems when knitting weaker yarns, and a greater length-wise deformation and consequent shrinkage after knitting.

The *Cadratex* unit [3] now commercially fitted to machines, has been developed by *ITF Maille* of France. It replaces the conventional spreader with two complementary elements, one inside and the other outside the fabric tube, that cause the tube to adopt a square cross-section and then a gradually flatter configuration but of constant circumference, right into the nip of the take-down rollers. The distance from any needle to the take-down rollers is the same so that wale and course density remains constant around the fabric tube and throughout its length whilst enabling a lower uniform take-down tension to be employed. During adjustment, the outer guide frame is maintained in an exact relationship with the inner frame.

Experiments by *ITF Maille* have demonstrated the possibility of employing a second pair of take-down rollers above the first so that the unit may be placed 12 inches (30 cm) higher than for a conventional stretcher board, thus enabling the fabric roll diameter to be increased from 19 to 32 inches (47 to 82 cm), increasing the potential fabric length in the roll by over 350 per cent.

22.10 Positive needle control

Positive guiding of needles through a cam system can be achieved on circular machines knitting plain unpatterned fabrics. In cam systems on jacquard machines, needle butts have to be switched to a choice of cam-tracks. At this point they cannot be under positive control so the cam-track is open. To reduce the chance of the unguided needle butt moving to a wrong position, needle movement is slowed down by using one or more of the following methods:

Skechers EX1050
Skechers v Nike

- Reducing the machine speed.
- Using friction needles, which also cause wear.
- Using flatter cam angles, which cause holes in the fabric.

With positive needle guidance, the needle has an additional control butt that is attached to a jack. This slides in a slot in the tail of the needle without causing unnecessary movement to the needle.

References

1. MUNDEN, D. L. *HATRA Research Report, No. 9*, (1959), April.
2. ANON., *Kettenwirk Praxis* (English Translation), (1981), 3, 1–2.
3. COOKE, W. D., *Knit. Int.*, (1980), Aug., 94–5.

Further information

ANON., Knitting properties of wool yarns and fabrics, *Wool Sci. Rev.*, (1973), Nov., (47), 2–13, (part 1); (1974), March, (48), 33–41, (part 2).
ANON., The geometry and properties of all-wool weft knitted structures, *Wool Sci. Rev.*, (1971), Jan., (40), 14–27, (part 1); (1971), March, (41), 14–27, (part 2); (1971), (42), 42–60 (part 3).
ANON., Positively speaking; Isaac Rosen to John Gibbon, *Hos. Trade J.*, (1972), June, 90–3.
BLACKMAN, B. F. and HOPKINSON, J. C., The application and impact of HATRA positive feed, *J. Text. Inst.*, (1962), 53(a), 590–609.
BOOTH, J. E., *Textile Maths, Vol III*, (1975), Textile Inst., Manchester, UK, pp. 487, 499.
GAN, L. R. and BROWN, J. M., Determination of dimensional changes of wool-containing knitted fabrics, *Text. Inst. and Ind.*, (1968), July, 187–91.
DANGEL, S. C., Cam action in weft knitting, *Knit. O'wr Times Yr. Bk.*, (1968), 278–83.
GAN, L. R., Dimensional stability of wool knitwear, *Hos. Trade J.*, (1968), Jan., 109–114; (1969), Nov., 117–120; (1969), Dec., 89–92.
GOADBY, D. R., IRO positive feed, *Knit. Int.*, (1977), Sept., 62–4.
GOADBY, D. R., IRO storage feed, *Knit. Int.*, (1977), Oct., 50–2.
GROSBERG, P., *Contributions of science to the development of the textile industry*, (1975), Textile Inst., 179–89.
HURT, F. N., Stabilisation of knitted fabrics, *Text. Inst. and Ind.*, (1966), Aug., 230–3.
KNAPTON, J. J. F., Possible future developments in high-speed knitting, *Knit. Times Yr. Bk.*, (1972), 87–91.
KNAPTON, J. J. F., The economic benefits of high-speed weft knitting, *Text. Inst. and Ind.*, (1975), 13, (4), 100–2.
KNAPTON, J. J. F., How to knit spun yarns efficiently, *Knit. Times Yr. Bk.*, (1977), 111–15.
LAWSON, J., The art of knitting, *Knit. O'wr Times Yr. Bk.*, (1968), 172–7.
MUNDEN, D. L., The dimensional properties of plain knit fabrics, *Knit. O'wr Yr. Bk.*, (1968), 266–71, 480.
MUNDEN, D. L., Geometry of knitted structures, *Textile Inst. Review of Textile Progress*, (1963), Vol. 14, 250–6; (1967), Vol. 17, 266–9.
RICHARDSON, G. A., Mechanical shrinkage control, *Text Inst. and Ind.*, (1977), 15, (2), 55–9.
SHELTON, W. E. A., Yarn furnishing devices. A survey and review of current practice. *Text. Inst. and Ind.*, (1973), 11, (6), 150–3.
WHEATLEY, B., Knitting outerwear fabrics on tricot and Raschel machines, *Knit. Times*, (1973), Oct., 108–16.

Skechers EX1050
Skechers v Nike

23

Basic warp knitting principles

23.1 Construction of warp knitted fabrics

In a warp knitted structure, all ends supplied from the same warp sheet normally have identical lapping movements because each is lapped by a guide attached to the same guide bar (Fig. 23.1). Beams (Fig. 23.2) supply the warp sheets in parallel form to the guide bars, whose pattern control determines the timing and configuration of the lapping movements in the form of overlaps and underlaps. The needles intermesh the new overlaps through the old overlaps to form the intermeshed loop structure.

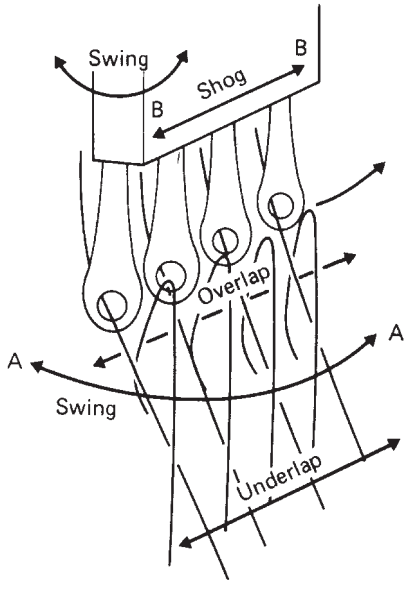

Fig. 23.1 Guide bar lapping movement.

Skechers EX1050
Skechers v Nike

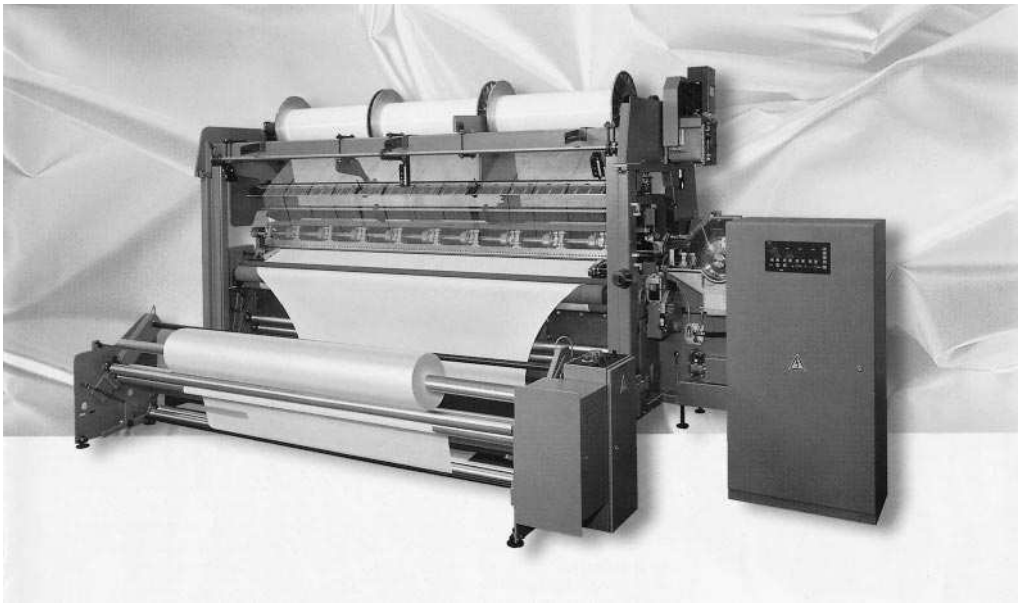

Fig. 23.2 Tricot machine HKS 2-3 [Karl Mayer].

23.2 The warp beams

To ensure uniform conditions of warp feed and tension, the yarn ends are supplied from flanged beams attached to shafts that turn to unwind the warp sheet in parallel formation. For convenience of handling, a number of beams may be attached to a beam shaft to achieve the full width of the warp sheet; for example, a warp sheet 84 inches (213 cm) wide might be supplied from a full-width beam, from two beams each 42 inches (106 cm) wide, or from four beams each 21 inches (53 cm) wide.

23.3 The guide bar

Each guide bar is normally supplied with a warp sheet from its own beam shaft to suit its requirements of threading and rate of warp feed for its particular lapping movement. Occasionally, two partly-threaded guide bars may be supplied from the same fully-threaded beam, provided they make lapping movements of the same extent to each other whilst moving in opposite directions. The minimum number of guide bars and warp sheets for commercially acceptable structures is usually two.

23.4 The guides

Warp guides are thin metal plates drilled with a hole in their lower end through which a warp end may be threaded if required. They are held together at their upper end as a single unit in a metal lead and are spaced to the same gauge as the needles.

Skechers EX1050
Skechers v Nike

The leads are attached to a guide bar so that the guides hang down from it, with each one occupying a position, when at rest, midway between two adjacent needles.

In this position, the warp thread cannot be received by the needles and it will merely produce a straight vertical float. The needles only receive the warp thread in their hooks if the guide bar overlaps across their hooks, or across their backs when the guide bar underlaps. All guides in a conventional guide bar produce an identical lapping movement at the same time and therefore have identical requirements of warp tension and rate of feed, although the threads may differ in colour or composition from each other.

23.5 Single needle bar structures

In the following description, for purposes of simplicity it is assumed that only one needle bar is being employed. Essentially, the principles remain the same for double needle bar machines which are described later in the book (Chapter 29).

When the needle bar is observed in plan view from above, it can be seen that the guides of a guide bar are required to execute a compound movement composed of two separately derived motions (Figures 23.1 and 23.3):

A *swinging motion* (A-A) and a *shogging movement* (B-B) act at right-angles to each other in order for their threads to form overlap and underlap paths that combine as one thread path around the needles.

The swinging motion is in an arc from the front of the machine to the hook side and a later return swing. It occurs between adjacent needles and is a fixed, collective, and automatic action for all the guide bars as they pivot on a common rocker-shaft. It is derived, in a similar manner to the needle and other element bar motions, from the main cam-shaft and is adapted via levers, pivots and linkages. The two swinging movements produce the two side limbs when combined with the overlap

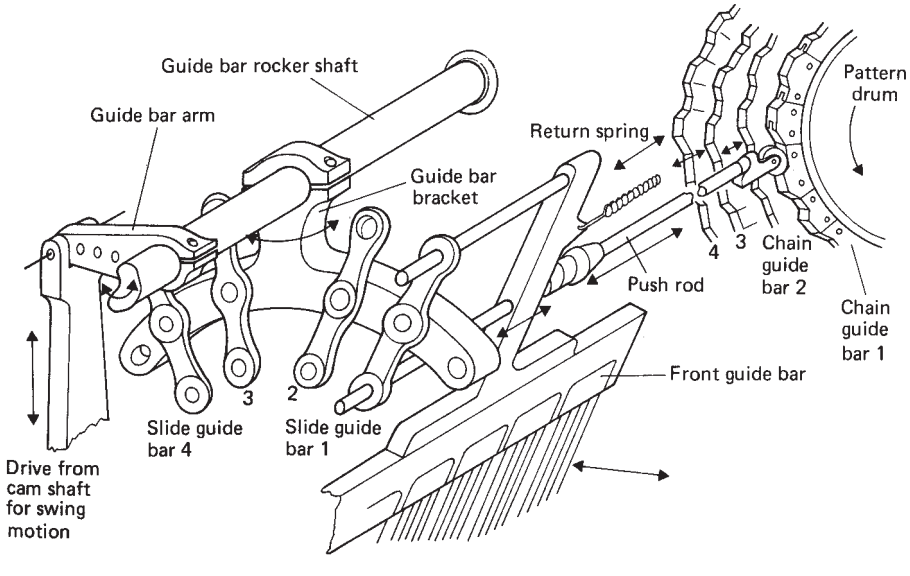

Fig. 23.3 Guide bar swinging and shogging mechanism [Reprinted by permission of *Knitting Times*, official publication of the NSKA in the USA].

Skechers EX1050
Skechers v Nike

shog. When the overlap is omitted, the guides swing idly between adjacent needles and achieve no useful purpose.

On some machines, such as mechanical jacquard raschels and some multi guide bar and double needle bar machines, it is more convenient to swing the needle bar and trick-plate between the guide bars after they have shogged for the overlap and underlap. This considerably reduces the complexity of movement of the heavy guide bar assembly to only that necessary for shogging and thus increases the speed and efficiency of the machine.

The sideways shogging movement that occurs parallel to the needle bar produces the underlaps and overlaps. The occurrence, timing, direction and extent of each shog is separately controlled for each guide bar by its pattern chain links or pattern wheel attached to a horizontal pattern shaft driven from the main cam-shaft but set at right angles to it at one end of the machine. The guide bars are shogged independently sideways, parallel to each other, along linear bearings that support them in the swinging frame assembly, which is keyed to the guide bar rocker-shaft.

A shogging movement can occur when the guides have swung clear of the needle heads on the back or front of the machine. On the hook side it will produce an overlap and on the side remote from the hooks it will produce an underlap. The timing of the shog during the 360 degrees of the main cam-shaft revolution will thus determine whether an overlap or underlap is produced.

23.6 The pattern mechanism

The shogging movement is initiated by varying the radius of the continuously-turning pattern shaft, either in the form of different heights of pattern links that pass over a pattern drum attached to the shaft, or in the form of carefully-shaped solid metal circular cams, termed pattern wheels, attached to it (Fig. 23.3).

An increase in height from one link to the next produces a thrust against the end of the guide bar, shogging it positively into the machine; a decrease will produce a negative shog towards the pattern shaft as the result of the action of a return spring. A constant height will produce no shog and the guide bar will continue to swing through the same needle space. The periphery of the pattern wheel or chain track is scanned by a roller that is linked by a flexible, ball-jointed push-rod to the end of a guide bar. The underside of the rod near the roller is supported on a slide that moves freely on a metal surface as shogging occurs.

The drive for the pattern shaft is obtained from the main cam-shaft, via bevel gears and a universal joint, to a worm that drives the worm-wheel of the pattern shaft. The ratio of cam-shaft speed to pattern shaft speed is usually 16:1; therefore, 1/16th of the surface of a pattern wheel would represent one course or knitting cycle.

Pattern wheels provide accuracy and smooth running at high speeds, but they are only economical for long production runs of the common, simple repeat structures. For fancy structures, frequent changes of pattern, and long pattern repeats, the shogging movements are obtained by assembling a chain of re-usable pattern links.

23.7 The chain links

In plan view, the identically Y-shaped chain links are similar in appearance to a tuning fork with the fork end leading. The tail of the preceding link fits into the fork

Skechers EX1050
Skechers v Nike

of the succeeding link. The links are held together by pins that are pushed through holes in the sides of the fork and tail. The pins pass through all the tracks and chains, and the ends fit into grooves in the serrated flanges of the pattern drum so that as the drum turns, the chain links are advanced in unison in a correct timing relationship.

Chain links require accurate grinding at the fork and/or the tail if they are higher than the preceding or succeeding link, so that a smooth transition and an accurately-timed shog occur (the ground ends of two successive links must never be adjacent to each other). Too sharp a gradient will produce an early-timed shog and too gradual a gradient a late-timed shog for the knitting sequence. There are four types of link: plain unground, fork ground, tail ground and fork and tail ground.

With *direct transmission* of the shogging movement from chain links to guide bar, as described, the exact distance shogged is the difference in heights between the two successive links. This method is employed on most high-speed machines and on the ground guide bars of many multi-bar raschels.

A second method, *indirect transmission*, magnifies or adapts the thrust derived from the links by transmitting it through a pivoted lever whose leverage can be adjusted, thus altering the throw of the shog. This is a versatile method used on the pattern guides of multi-bar machines that enables links of one gauge to be employed for a range of machine gauges and also for arrangements that economise on chain links.

Chain link numbering commences with '0' height and every chain sequence must contain at least one of these '0' links. When the guide bar is on this link it will be in its nearest position to the patterning mechanism during that particular lapping movement. Tricot links are numbered 0, 1, 2, 3, 4, 5, etc. With direct shogging, each successive number is one needle space higher than the previous link. On a 28-gauge tricot machine, a '2' link will be 1/28th inch higher than a '1' link, which itself will be 1/28th inch higher than a '0' link. If a '1' link is placed after a '0' link, a one-needle space shog away from the pattern mechanism will be produced. If a '0' link is placed after a '3' link, a three-needle space shog towards the patterning mechanism will occur. If two links of the same height are placed next to each other, for example a '3' followed by a '3', no shog will be produced and the guides will remain between the same needle spaces.

It must be understood that the height of a link, for example '0', does not represent a fixed position between two needle spaces because all the guides in the same guide bar will have been positioned by the same '0' link, but each will be between a different pair of needles across the knitting width.

For any guide, a '0' link is the nearest that guide will approach towards the pattern mechanism for that particular lapping movement repeat. Likewise, two guides in different guide bars may occupy the same space between two adjacent needles and yet be on different heights of links at that point.

A chain notation is a list, in correct sequence of chain link numbers, spaced into knitting cycles, for each guide bar necessary to produce a particular fabric structure repeat (Fig. 23.4D). The difference between the first two links is normally the overlap. It must be remembered that the links are joined together in a closed loop, with the starting link for each guide bar joined to its last link. For this reason, underlap movements towards left and right tend to balance each other. It does not matter from which direction the chain numbering takes place (left or right) providing it takes place consistently from the same side for all guide bars in a particular structural repeat.

Skechers EX1050
Skechers v Nike

The number of links per course is fixed for each machine. A minimum of two is usually required, with the underlap occurring between the second link of one course and the first link of the next. On tricot machines, a third intermediate link is often used so that the underlap is also spread between the second and third links, giving it more time and coinciding more closely with the knitting cycle requirements.

23.8 The electronic guide bar control system

Both pattern wheels and chain links are ground to suit the pattern requirements of a specific fabric. When a new pattern is required, it is necessary to assemble a new pattern chain and prepare a new set of pattern wheels.

To overcome this problem, the *Karl Mayer* EL system uses a separate linear motor to directly shog each guide bar. The sensitive shogging movement is built-up in 1/100 mm increments by the patterning computer. Mechanical movement, and therefore inertia, is reduced, resulting in 30 per cent higher production speeds compared to those with profiled chain links. Direct drive of the guide bar by linear drive enables a 12 needle shog in E 28 gauge to be obtained, and the length of the pattern repeat no longer limits the machine speed.

23.9 The development of lapping diagrams and chain notations

Lapping diagrams are drawn around horizontal rows of points that represent needles in plan view, usually assuming the pattern mechanism to be on the right. As the guides position themselves in the spaces between needles, the positions between the vertical columns of points can be given chain link numbers commencing with the '0' position, which is to the right of the right-hand column of points.

Provided the direction and extent of the overlaps are correctly indicated in the lapping diagram and chain notation, the underlaps will always be correctly positioned as each extends from the end of one overlap to the start of the next.

Figure 23.4A represents a diagrammatic plan view of a two-course repeat sequence. S_1 and S_2 represent the swinging motions and O and U represent the overlap and underlap shogs at each course.

In the lapping diagram (Fig. 23.4C), the first overlap will be drawn in a curve over a point from space '1' to space '0' and the second from space '2' to space '3'. The lapping diagram is completed by joining the overlaps to each other with underlaps and the chain is notated as 1-0/2-3/ where-represents an overlap and / an underlap.

The shogging movements are produced by the transition from one link to the next, whereas the swinging motions occur whilst the push-rod roller of the guide bar is in the centre, so that no shog is produced.

23.10 Single- or double-needle overlaps

Overlap movements are normally across only one needle space because two-needle overlaps cause both the warp thread and the needles to be subjected to the severe

Skechers EX1050
Skechers v Nike

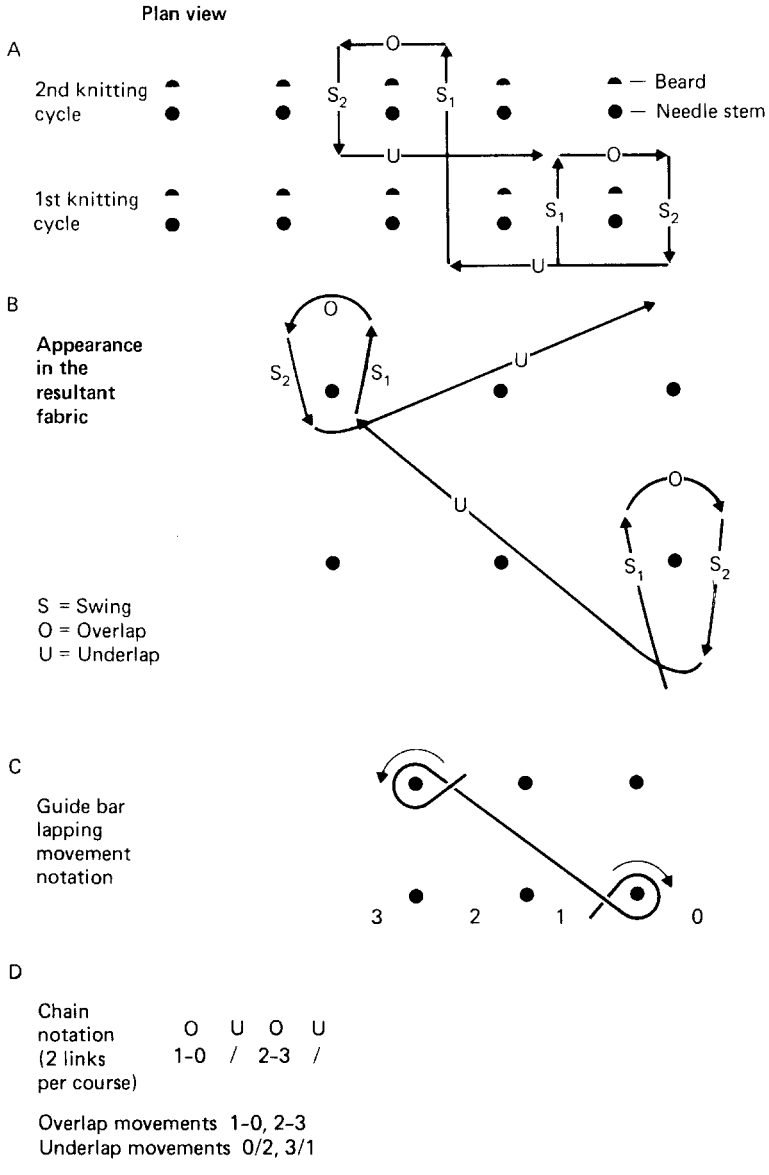

Fig. 23.4 Warp knitting lapping and chain notation.

strain of two simultaneous adjacent knock-over actions. In addition, different tensions on the two loops in the structure adversely affect their appearance. The underlap between the double overlaps has the appearance of a sinker loop. Only in a few raschel fabric structures is the double-needle overlap used and there the needles are less easily deflected than on tricot machines, and there are no knock-over sinkers over which to draw the loops. A single, full-threaded guide bar making a double-needle overlap will cause each needle to receive two overlapped threads at that course.

Skechers EX1050
Skechers v Nike

23.11 The five basic overlap/underlap variations

All guide bar lapping movements are composed of one or more of the following lapping variations (Fig. 23.5):

1 An overlap followed by an underlap in the opposite direction (closed lap) (Fig. 23.5a).
2 An overlap followed by an underlap in the same direction (open lap) (Fig. 23.5b).
3 Only overlaps and no underlaps (open laps) (Fig. 23.5c).
4 Only underlaps and no overlaps (laying-in) (Fig. 23.5d).
5 Neither overlaps nor underlaps (miss-lapping) (Fig. 23.5e).

Movements 4 and 5 require the overlaps of another guide bar in front in order to hold them into the structure.

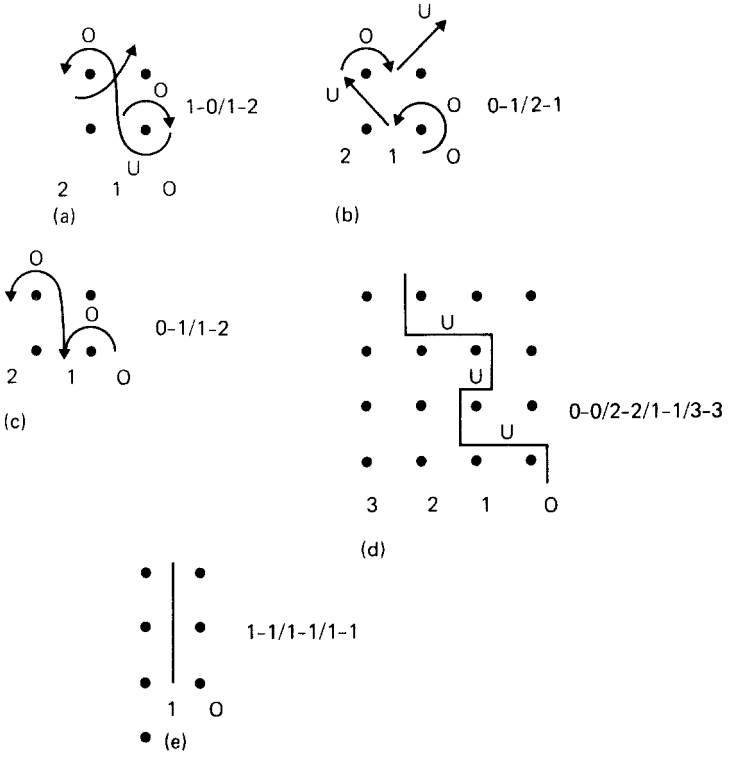

Fig. 23.5 Overlap/underlap variations.

23.12 The direction of lapping at successive courses

When using either open or closed laps there are three possible arrangements of lapping at successive courses, which may be used alone or in combination:

1 *The pillar stitch*. In the pillar or chain stitch, the same guide always overlaps the same needle. This lapping movement will produce chains of loops in uncon-

Skechers EX1050
Skechers v Nike

nected wales, which must be connected together by the underlaps of a second guide bar.

Generally, pillar stitches are made by front guide bars, either to produce vertical stripe effects or to hold the inlays of other guide bars into the structure.

Open-lap pillar stitches are commonly used in warp knitting. They can be unroved from the end knitted last.

Closed-lap pillar stitches are employed on crochet machines because the lapping movement is simple to achieve and is necessary when using self-closing carbine needles, which must always be fed with yarn from the same side (Fig. 23.6).

2 *Balanced advance and return lapping in two courses* (23.5a). Many tricot structures are based on this type of lapping movement. Its extent may be described by indicating the number of needles underlapped, followed by the number of needles overlapped (usually one). With a fully-threaded guide bar every one-needle space increase in the underlap movement will cause an extra warp thread from that bar to cross between each wale.

Tricot lapping or 1×1 is the simplest of these movements, producing overlaps in alternate wales at alternate courses with only one thread crossing between adjacent wales. Two threads will cross between wales with a 2×1 or *cord lap*, three threads with a 3×1 or *satin lap*, four threads with a 4×1 or *velvet lap*, and so on.

Each increase in the extent of the underlap tends to make the structure stronger, more opaque and heavier. The increasing float of the underlap has a

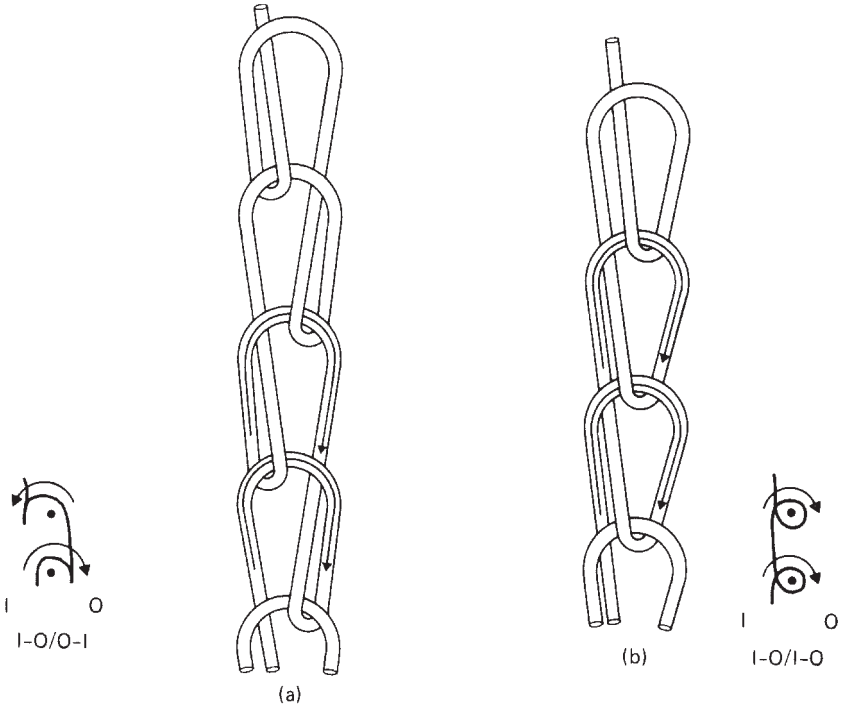

Fig. 23.6 Open and closed lap pillar stitches.

Skechers EX1050
Skechers v Nike

more horizontal appearance, whilst overlaps produced by the same thread will be separated from each other at successive courses by an extra wale in width.

3 *Atlas lapping* (Fig. 23.7). This is a movement where the guide bar laps progressively in the same direction for a minimum of two consecutive courses, normally followed by an identical lapping movement in the opposite direction. Usually, the progressive lapping is in the form of open laps and the change of direction course is in the form of a closed lap, but these roles may be reversed. From the change of direction course, tension tends to cause the heads of the loops to incline in the opposite direction to that of the previous lapping progression. The change of direction course is normally tighter and the return progression courses cause reflected light to produce a faint, transverse shadow, stripe effect.

The underlaps on the technical back give the appearance of sinker loops in a spirally weft knitted structure. With a single guide bar having different coloured warp threads, zigzag effects can be produced. This is sometimes termed *single atlas* or *vandyke*. More elaborate geometrical patterns can be achieved with patterned warps using atlas lapping on two or more guide bars. Atlas is also the base for many simplex and all Milanese fabrics.

Cohesive single guide bar structures (Fig. 23.8a, b) may be knitted using a single, fully-threaded guide bar producing underlaps and overlaps. However, these are seldom commercially viable because of their flimsiness, low strength, lack of stability, poor covering power, distortion caused by loop inclination, and limited patterning potential.

Loop inclination is caused by the underlaps of the guide bar entering and leaving the head of the needle loop from the same side and thus producing an unbalanced tension from that direction (unlike weft knitting where the sinker loops enter and leave from opposite sides of the head of the loop).

A more balanced tension is achieved by having two sets of warp threads underlapping in opposition to each other so that the underlaps of each enter and leave

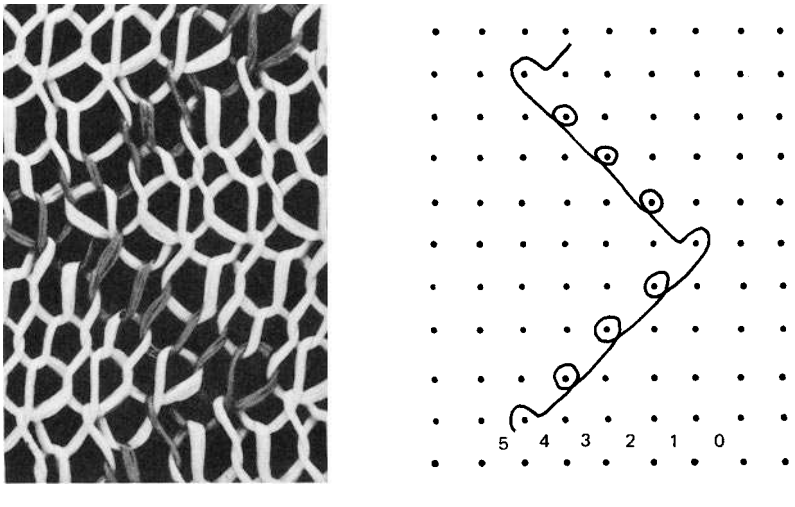

Fig. 23.7 Atlas lapping.

Skechers EX1050
Skechers v Nike

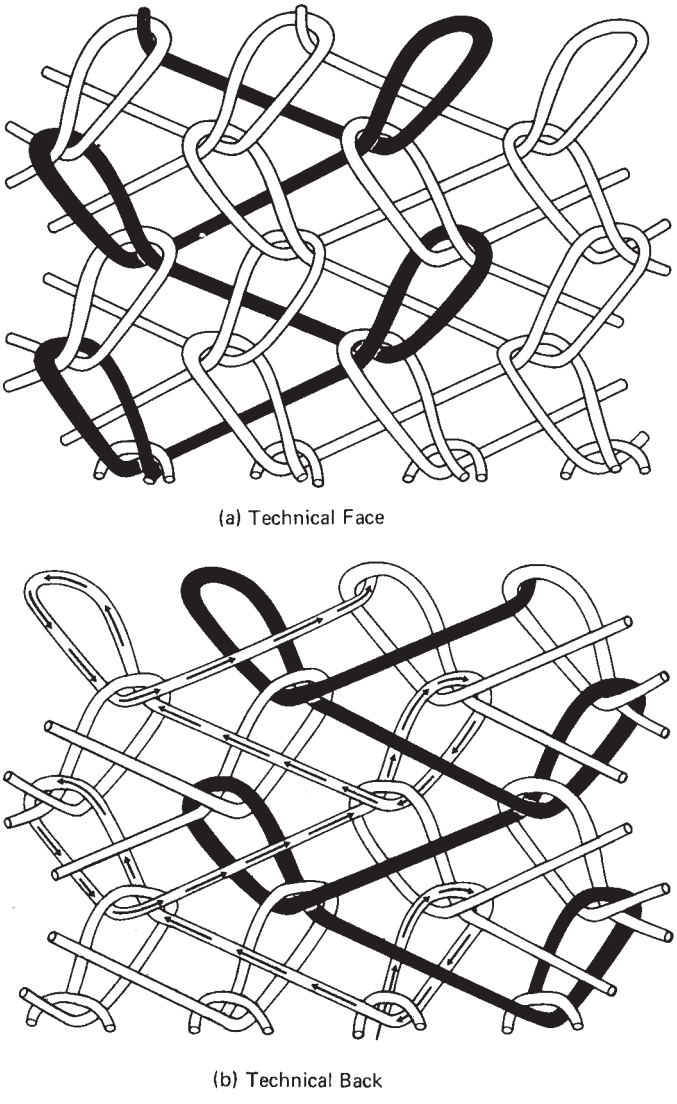

Fig. 23.8 Face and back of single guide bar warp knitted fabric.

from opposite sides of the head of the loop. For these reasons, the simplest warp knitted structures are usually composed of two sets of warp threads, and most machines have a minimum of two guide bars.

Further information

PALING, D. F., *Warp Knitting Technology*, (1965), Columbine Press, Manchester, UK.
RAZ, S., *Warp Knitting Production*, (1987), Melliand, D6900 Heidelberg, Germany, ISBN 3-87529-022-4.
REISFELD, A., *Warp Knit Engineering*, (1966), Nat. Knit. O'wr. Ass., New York, USA.
REISFELD, A., Warp knit fabrics and products, *Knit. Times*, (1969), Part 6, 24 Feb., 35–47; part 8, 21 July, 75–82.

Skechers EX1050
Skechers v Nike

THOMAS, D. G. B., *Introduction to Warp Knitting*, (1976), Merrow Technical Library.
WEBER, K. P., Warp knitting technology, *Knit. Times*, (1970), Part 1, 31 Aug., 32–37; Part 2, (1971), 11 Jan., 62–8; Part 3, 22 Feb., 49–59; Part 4, 29 March, 63–5; Part 5, 19 April, 231–9; Part 6, 5 July, 31–41.
WHEATLEY, B., Production of outerwear on Raschel and Tricot machines, *Knit. Times*, Part 1, (1971), 29 Nov., 56–61; Part 2, 27 Dec., 64–70; Part 3, (1972), 28 Feb., 36–41, Further parts were published throughout l972 and 1973 with part 15 on 12 Nov., (1973) completing the series.
WILKINS, C., *Warp Knit Fabric Construction*, (1995), U. Wilkins Verlag, Heusenstamm, Germany.
WILKINS, C., *Warp Knit Machine Elements*, (1998), U. Wilkins Verlag, Heusenstamm, Germany.

Skechers EX1050
Skechers v Nike

24

Classes of warp knitting machines

24.1 Characteristics of tricot and raschel machines

The two major classes of warp knitting machines are *tricots* and *raschels* (NB: In some countries tricot machines are termed *automatic warp knitting machines*). In the past, tricot machines mainly employed *bearded needles* with a presser bar and raschels used *latch needles* together with a latch wire or blade. Now, despite widespread use of the compound needle (Fig. 23.1), there are still distinctive differences between the two types.

24.2 The tricot machine

Tricot machines (Figures 24.1 and 24.2) have a gauge expressed in needles per inch (E) and chain link numbering 0, 1, 2, 3, 4, etc., generally with three links per course. Their sinkers, which are joined to each other at the front and back, never move clear of the needles as they combine the functions of holding-down, knocking-over, and supporting the fabric loops.

The fabric is drawn-away towards the batching roller almost at right angles to the needle bar. The warp beams are accommodated in an inclined arc towards the back of the machine, with the top beam supplying the front guide bar and the bottom beam supplying the back guide bar. The warp sheets pass over the top of the guide rocker-shaft to their tension rails situated at the front of the machine. The machines have a simple construction and a short yarn path from the beams.

Mechanical attention to the knitting elements is carried out at the front of the machine as the warp beams prevent access to the back. As all the warp sheets are drawn over the rocker-shaft to the front of the machine it is easier to thread up the guide bars commencing with the back bar; otherwise the front warp will obscure this operation. The guide bars are therefore numbered from the back towards the front of the machine because of this threading sequence.

The conventional tricot beam arrangement generally restricts the maximum

Skechers EX1050
Skechers v Nike

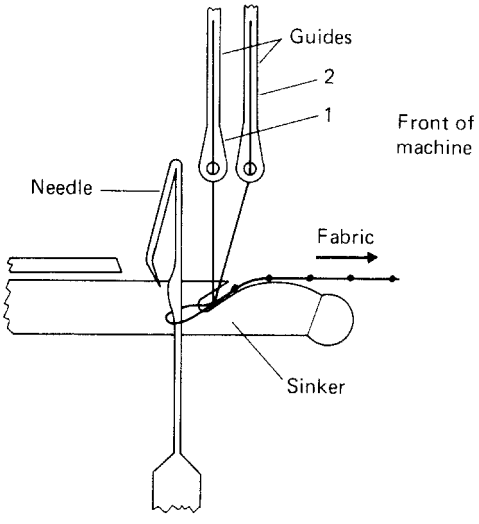

Fig. 24.1 Knitting elements in a bearded needle tricot machine.

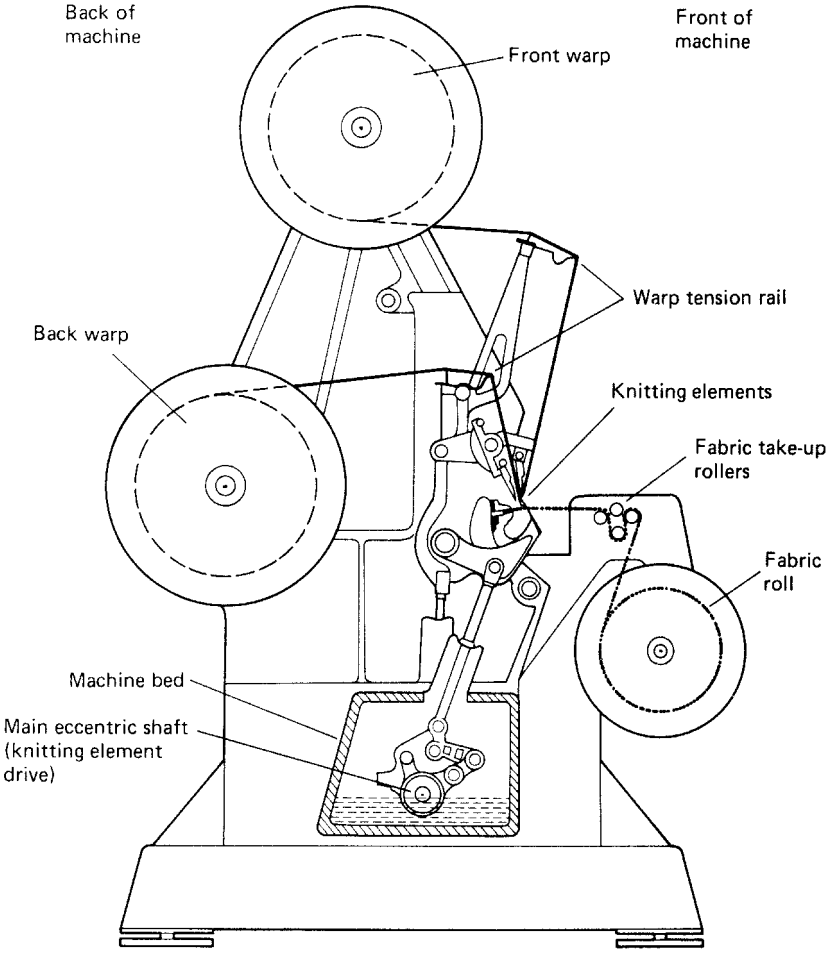

Fig. 24.2 Cross-section of a bearded needle tricot machine.

Skechers EX1050
Skechers v Nike

number of beams and guide bars to four, but this is not of major importance as the majority of tricot machines employ only two guide bars.

The small angle of fabric take-away and the type of knitting action produce a gentle and low tension on the structure being knitted. This is ideal for the high-speed production of simple, fine-gauge (28–44 npi), close-knitted, plain-and-patterned structures, particularly for lingerie and apparel, especially using two guide bar structures with both bars overlapping and underlapping.

In the past, the two guide bar *tricot* or *locknit* machine proved most popular in E 28 and E 32 gauge, with knitting widths of 84 and 168 inches (213 and 426 cm) using 40-denier nylon. It is possible to knit from 10-denier nylon up to 1/20's cotton count. Machine gauges can range from E 10 for coarse staple fibre yarns to E 20–E 24 for textured yarn fabrics and E 36–E 44 gauge for fine fabrics, in knitting widths up to 260 inches (660 cm).

The needles, like the sinkers and guides, may be cast in leads or they may be individually cranked to fit into the needle bar.

24.2.1 The knitting cycle of the bearded needle tricot machine

Figure 24.3 illustrates the knitting cycle of the bearded needle tricot machine:

1 *The rest position* (a). The needles have risen to 2/3 of their full height from knock-over and have their beards towards the back of the machine. The presser

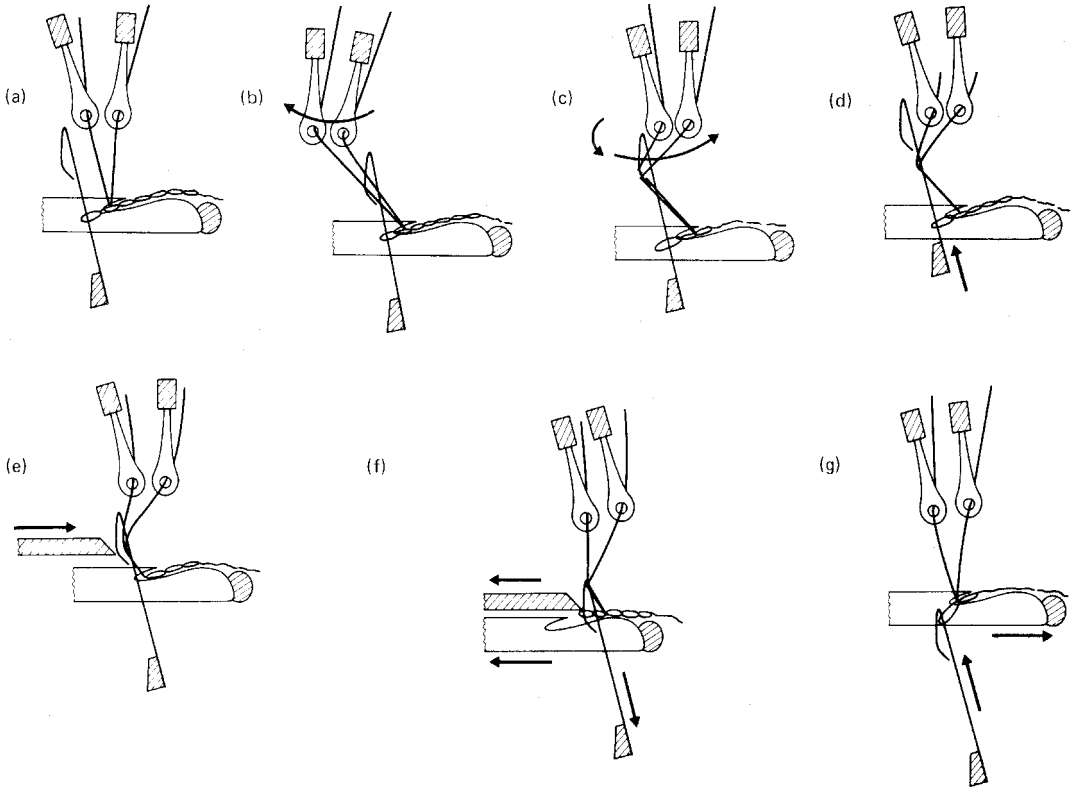

Fig. 24.3 Knitting cycle of a bearded needle tricot machine.

Skechers EX1050
Skechers v Nike

is withdrawn and the guides are at the front of the machine with the sinkers forward, holding the old overlaps in their throats so that they are maintained at the correct height on the needle stems.

2 *Backward swing and overlap shog* (b, c). After swinging through the needles to the beard side, the guides are overlapped across the beards, usually by one needle space in opposite directions.

3 *The return swing and second rise* (c, d). As the guides swing to the front, the needles rise to their full height so that the newly-formed overlaps slip off the beards onto the stems above the old overlaps. This arrangement reduces the amount of guide-bar swing necessary and therefore the time required.

4 *Pressing* (e). The needle bar descends so that the open beards cover the new overlaps. There is a slight pause whilst the presser advances and closes the beards.

5 *Landing* (f). As the sinkers withdraw, the upward curve of their bellies lands the old overlaps onto the closed beards.

6 *Knock-over and underlap shog* (g). The presser is withdrawn and the continued descent of the needle bar causes the old overlaps to be knocked-over as the heads of the needles descend below the upper surface of the sinker bellies. The underlap shog which can occur at any time between pressing and knock-over usually occurs in opposite directions on the two guide bars.

7 *The sinkers now move forward* to hold down the fabric loops and push them away from the ascending needles, which are rising to the rest position.

24.3 The raschel machine

24.3.1 The history and development of the raschel machine

In 1855, German warp knitters in Apolda used warp rib machines made by *Redgate* of Leicester to knit lace stoles which they sold under the name of *Raschel Felix*, the famous French actress [1], so that when *Wilhelm Barfuss* began to build his latch needle rib machines, he named them *raschel* machines [2]. Originally, two vertical needle bars arranged back-to-back, mid-way between each other, were employed for producing simulated rib fabrics. In 1914, when the needle bars were placed directly back-to-back, only even-numbered chain links were required.

Until the mid-fifties, the raschel industry tended to be small, employing slow, cumbersome but versatile coarse-gauge universal raschels. These had two needle bars, one of which could be removed or replaced with plush points, changeable cams and patterning mechanisms that might include fall plate, crepe and fringing motions, chain switching, and possibly weft insertion or jacquard.

The development of modern specific-purpose raschels dates from 1956, when a twelve guide bar raschel machine led to the rise of the raschel lace industry [3]. There are now single needle bar raschels for simple and multi-guide bar dress and household fabrics, elastic laces, trimmings and curtain nets; high-speed standard raschels for simple structures such as suitings; versatile multi-purpose raschels for fancy fabrics, weft insertion; and jacquard raschels and double needle bar raschels for plush, tubular articles, scarves and string vests.

There is an increasing demand for finer, lighter fabrics with minimum elongation and transparency. Warp knitting is able to meet this requirement by producing fabrics weighing much less than 100 g/m^2 with very little edge-curling.

Skechers EX1050
Skechers v Nike

The finest gauge single bed raschel is E 40. It can knit lightweight foundation and swimwear at speeds between 1900 and 2200 rpm in a yarn count of approximately 80 dtex.

24.3.2 Description of the raschel machine

Raschel machines (Figures 24.4 and 24.5) originally had a gauge expressed in needles per 2 inches (5 cm), so that, for example, a 36-gauge raschel would have eighteen needles per inch. Now, the standard E gauge (needles per inch) is generally used. There is a wide gauge range, from E 1 to E 32.

Their chain links are usually numbered in even numbers, 0, 2, 4, 6 etc., generally with two links per course. Raschel sinkers perform only the function of holding down the loops whilst the needles rise. They are not joined together by a lead across their ends nearest to the needle bar so they can move away clear of the needles, towards the back of the machine, for the rest of the knitting cycle. The needle trick-plate verge acts as a fabric support ledge and knock-over surface.

The fabric is drawn downwards from the needles, almost parallel to the needle bar, at an angle of 120–160 degrees, by a series of take-down rollers. This creates a high take-up tension, particularly suitable for open fabric structures such as laces and nets.

The warp beams are arranged above the needle bar, centred over the rocker-shaft, so that warp sheets pass down to the guide bars on either side of it. The beams are placed above the machine so that it is accessible at the front for fabric inspection and at the back for mechanical attention to the knitting elements. The guide bars are threaded, commencing with the middle bars and working outwards from either side of the rocker-shaft. They are numbered from the front of the machine.

With the raschel arrangement, there is accommodation for at least four 32-inch diameter beams or large numbers of small diameter pattern bars. The accessibility of the raschel machine, its simple knitting action, and its strong and efficient

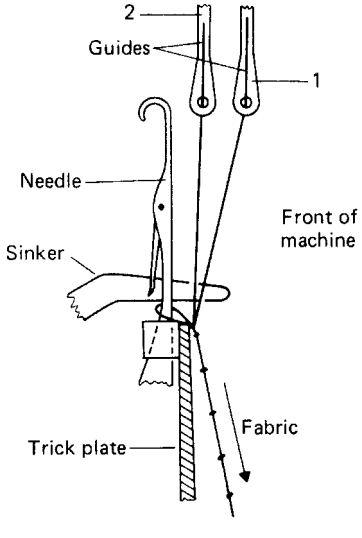

Fig. 24.4 Knitting elements in a latch needle raschel machine.

Skechers EX1050
Skechers v Nike

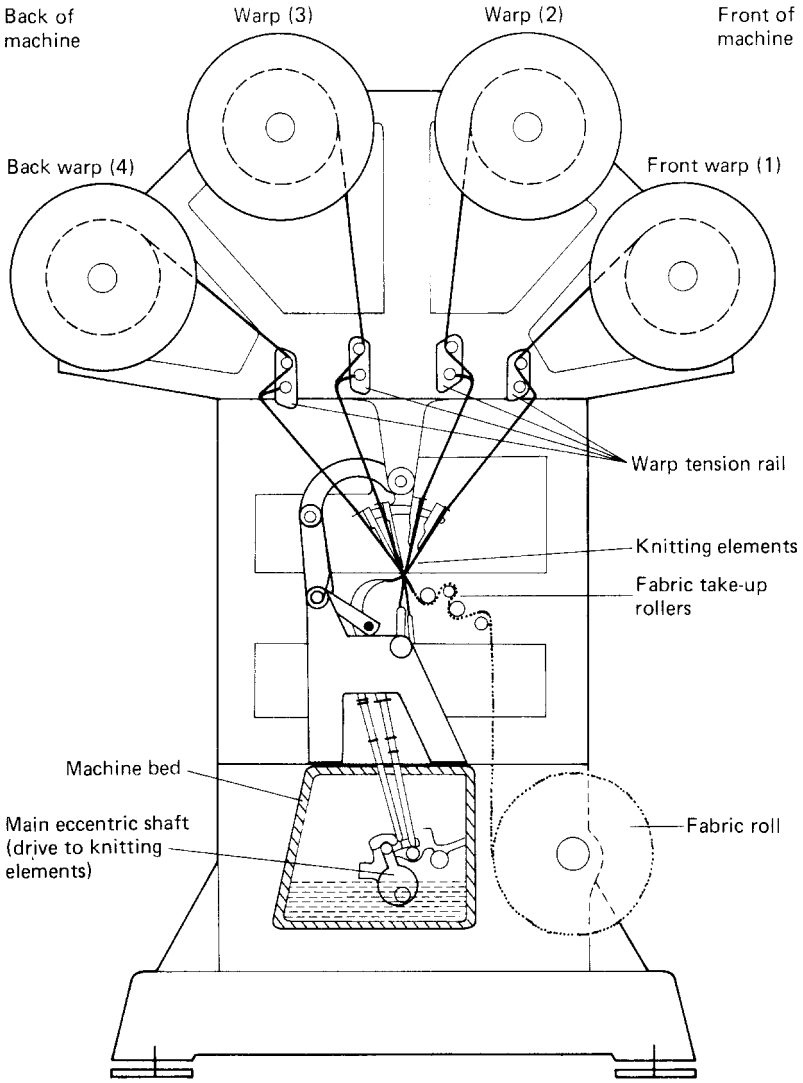

Fig. 24.5 Cross-section of a latch needle raschel machine [Reprinted by permission of *Knitting Times*, official publication of the NKSA in the USA].

take-down tension make it particularly suitable for the production of coarse gauge open-work structures employing pillar stitch, inlay lapping variations and partly-threaded guide bars. These are difficult to knit and hold down with the tricot arrangement of sinkers. Additional warp threads may be supplied at the selvedges to ensure that these needles knit fabric overlaps, otherwise a progressive press-off of loops may occur.

24.3.3 The knitting action of the single needle bar raschel machine

Raschel needles tend to have longer latches than weft knitting machine needles, to ensure that the wrapped yarns of the overlap goes onto and not below the open latch (Fig. 24.6). There is a trick-plate extending the full width of the machine, whose

Skechers EX1050
Skechers v Nike

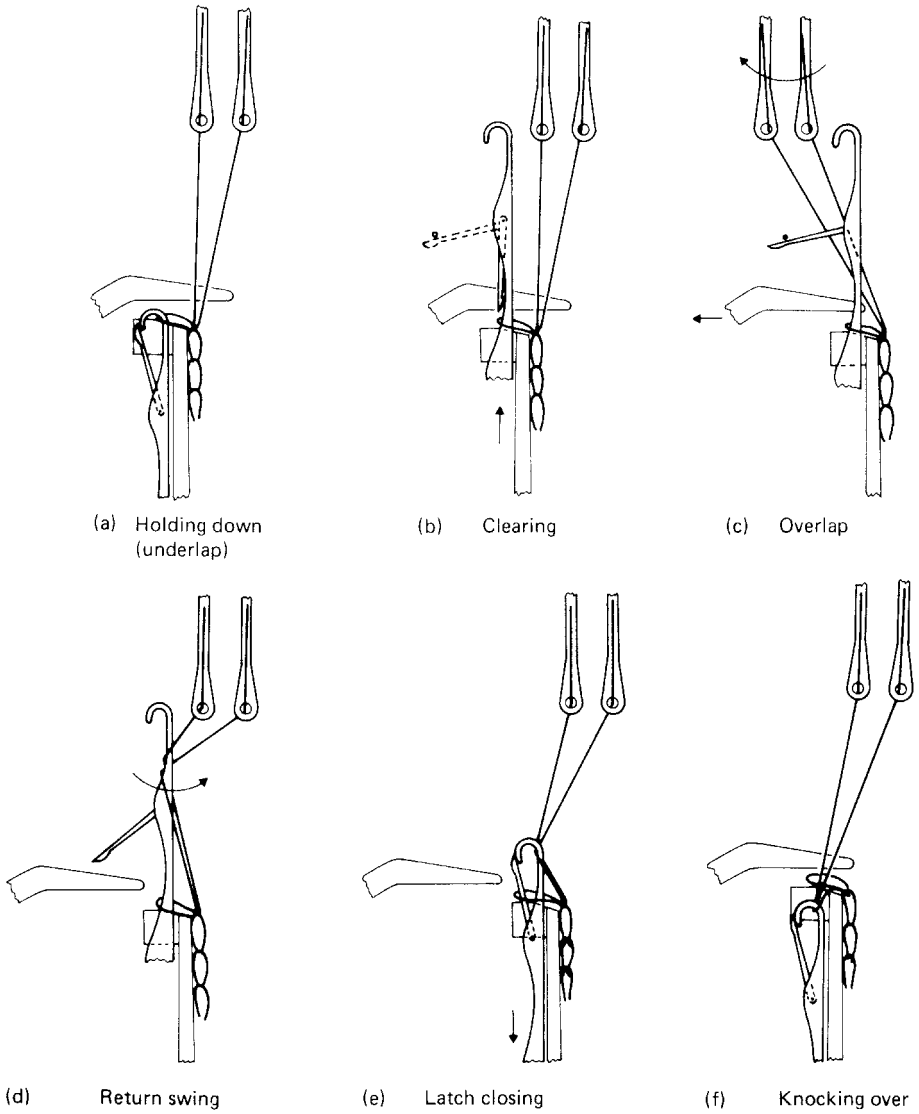

Fig. 24.6 Knitting action of a single needle bar latch needle raschel machine.

walls preserve the needle spacing and whose verge provides an edge for a clean knock-over. Holding-down sinkers that are thin blades, unleaded at their forward edges, move in a horizontal plain over the top of the trick-plate.

1 *Holding down*. The guide bars are at the front of the machine, completing their underlap shog. The sinker bar moves forward to hold the fabric down whilst the needle bar starts to rise from knock-over.
2 *Clearing*. As the needle bar rises to its full height, the old overlaps slip down onto the stems after opening the latches, which are prevented from flicking closed by latch wires. The sinker bar then starts to withdraw to allow the guide bars to overlap.

Skechers EX1050
Skechers v Nike

3 *Overlap*. The guide bars swing to the back of the machine and then shog for the overlap.
4 *Return swing*. As the guide bars swing to the front, the warp threads wrap into the needle hooks.
5 *Latch closing*. The needle bar descends so that the old overlaps contact and close the latches, trapping the new overlaps inside. The sinker bar now starts to move forward.
6 *Knocking-over and underlap*. As the needle bar continues to descend, its head passes below the surface of the trick-plate, drawing the new overlap through the old overlap which is cast-off and as the sinkers advance over the trick-plate, the underlap shog of the guide bar is commenced.

24.4 The compound-needle warp knitting machine

After its introduction in 1946, the two guide bar British-built FNF tricot machine with its tubular compound needles (Section 3.16) became, for 10 years, the pacemaker of the industry, with its speed of 1000 courses per minute being more than twice that of contemporary bearded needle machines. It also incorporated many new features such as double eccentric element drive, positive warp let-off, light spring warp tension rails, and carefully-balanced machine parts. However, it required precise setting-up, its pattern scope was limited, and needles and other parts were expensive.

In 1965 the *FNF Company* ceased production, having failed to improve their machine in the face of increasing competition from high-speed bearded needle tricots with single eccentric drives built by the West German companies of *Liba* and *Karl Mayer*. The East German *Kokett* concern, however, continued its production of compound needle tricot machines.

In 1967 *Liba*, in a bid to increase production speeds, introduced a new design open-stem compound needle into both raschel and tricot machinery and by the mid 1970s *Karl Mayer* was pursuing a similar policy.

Now, the compound needle is employed in most high-speed warp knitting machines, excluding double needle bar raschels. Its short, simple action enables 3300 cpm to be achieved without the problems of metal fatigue and loop distortion associated with latch and bearded needles.

The open stem needle is simpler, cheaper and more adaptable than the FNF tube needle, having individually replaceable hook members and a wider open hook.

The designs of the other elements are similar to those in conventional machines except that the tricot sinkers have flat bellies because the compound needle does not require assistance in landing the old overlap.

The hook members are individually mounted in their bar whilst the tongues are set in leads that are mounted in the tongue bar.

24.4.1 The knitting action of the compound needle warp knitting machine

Figure 24.7 illustrates the knitting action of a compound needle warp knitting machine:

1 *Needle rise and guide bar swing.* With the sinkers forward holding down the fabric, the hooks and tongues rise, with the hook rising faster, until the head of

Skechers EX1050
Skechers v Nike

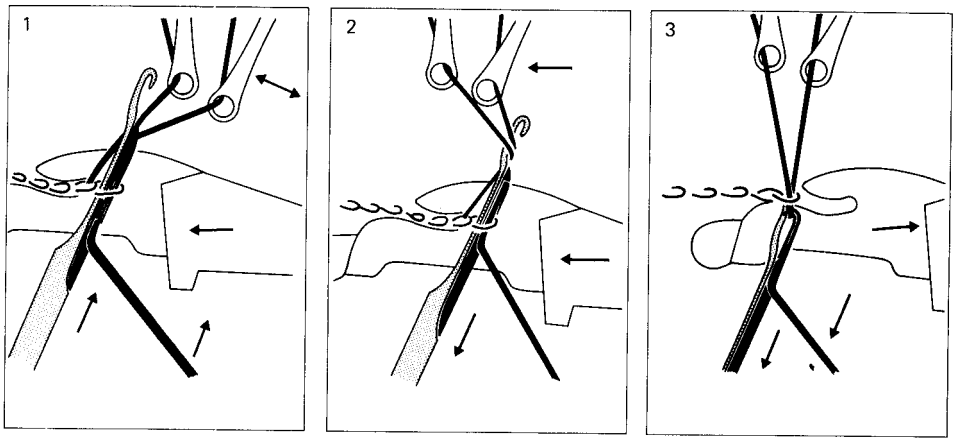

Fig. 24.7 Knitting action of a compound needle tricot machine.

the latter is level with the guide holes and is open. The guides then swing through to the back of the machine.

2 *The overlap and return swing.* The guides shog for the overlap and swing to the front of the machine; immediately, the hooks and the tongues start to descend with the tongues descending more slowly, thus closing the hooks.

3 *Landing and knock-over.* The sinkers start to withdraw as the needles descend so that the old loop is landed onto the closed hook and then knocked-over as it descends below the sinker belly. At this point the underlap occurs before the needles begin their upward rise and the sinkers move forward to hold down the fabric.

The *Karl Mayer* tricot model HKS 2–3 E is designed to knit elastic fabrics and has a maximum speed of 3300 cpm with reduced noise levels and energy consumption. The vertical staggered arrangement of the guide bars enables the stroke to be reduced. The bars are hollow section which reduces their weight and expansion due to heat.

24.5 The crochet machine

In hand crocheting, a hook is used to draw a new loop through the old loop with the chains of loops being joined together at intervals.

On crochet machines, the warp chains are separate from the weft inlay and it is the latter threads that join the chaining wales to each other. The *crochet galloon* machine, as developed by *Sander and Graff* and popularised by *Kholer*, is essentially a highly versatile raschel with the following unique features (Figures 24.8 and 24.9):

- A *single horizontal needle bar* whose simple reciprocating action can be used to operate individually-tricked latch, carbine or embroidery needles.

  The *patent* or *carbine bearded needle* is used for fine structures and has a sideways crimped beard placed in a permanently-pressed position. Although warp threads can only be fed into the beard from the left (necessitating a unidirec-

Skechers EX1050
Skechers v Nike

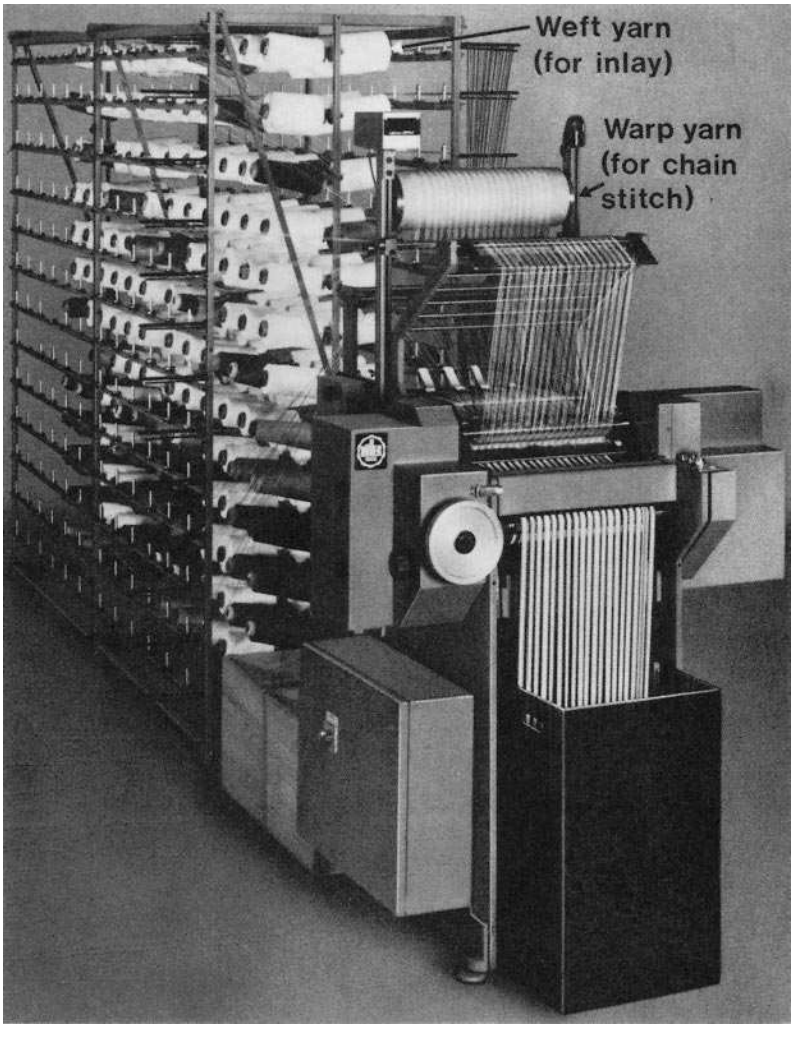

Fig. 24.8 The crochet machine. Knitting narrow width elastic trimmings [Jacob Muller].

tional closed overlap), the old overlaps are automatically cleared and landed by the movement of the needle. It is still the most frequently used needle, achieving speeds up to 2500 rpm. Reduced machine speed and high needle wear make its use uneconomical for knitting single end cotton yarns.

Embroidery or *lace needles* are carbine needles with pointed heads that can penetrate pre-woven structures to produce embroidery effects. The needles can be arranged for coarser gauges or for fancy set-outs, when the floating inlay threads may be cut to produce separated fringed edgings.

The *compound needle* patented by *Müller* produces less stress on the yarn during loop formation so a wider range of yarns can be used, and compound needles last up to six times longer than bearded needles.

Latch needles operate at uneconomic speeds and have a short life due to latch breakage.

Skechers EX1050
Skechers v Nike

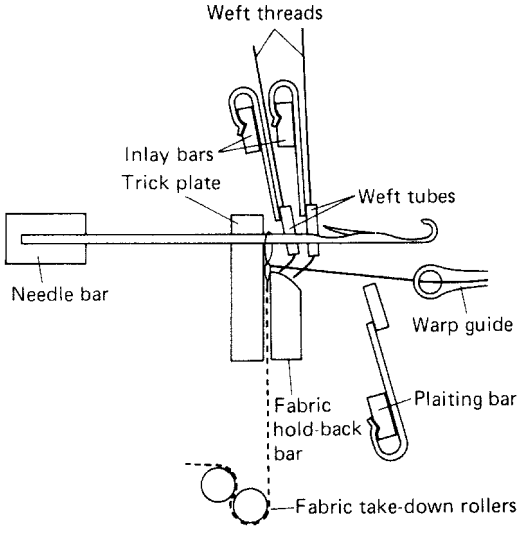

Fig. 24.9 Knitting elements in a crochet machine [*Knitting International*].

- *No sinkers*; instead a fixed hold-back bar is fitted in front of the knock-over verge to prevent the fabric moving out with the needles.
- *Closed lap pillar stitches and inlay threads controlled and supplied as separate warp and weft respectively*. Each needle is lapped from below by its own warp guide, which is clipped to a bar whose automatic one-needle overlap and return and underlap shog is fixed and is controlled from an eccentric cam whilst its upwards and downwards swing is derived from a rocker-shaft. The warp yarn is often placed low at the front of the machine.
- *The weft yarn, often placed above and towards the back of the machine, supplying the carrier tubes, which are clipped to the spring-loaded inlay bars*. These bars are fitted above the needle bar and are shogged at the rate of one link per course, from pattern chains around a drum at one end of the machine. There are usually up to two warp guide bars and up to 16 weft inlay bars, which may be electronically controlled.
- *Special attachments* are available for producing fancy effects such as cut or uncut fringe edges, pile, braiding (equivalent to fall-plate) and snail shell designs.

Crochet machines, with their simple construction, ease of pattern and width changing, and use of individual yarn packages or beams provide the opportunity for short runs on coarse- or fine-gauge fancy and open-work structures and edgings, as well as the specialist production of wide fancy fabrics or narrow elastic laces.

The weft inlay bars may either be electronically-driven or mechanically-controlled in the traditional manner by chain links or levers. The choice is governed by the requirements either of long complex pattern repeats and quick pattern changes as in sampling, or for simple structures and long production runs [4].

Very approximately, the knitting widths of crochet machines may vary between 16 and 122 inches (400 and 3100 mm). Gauges, often expressed in needles per centimetre, are between 2 and 10 (E 5 to E 24).

Müller quote gauges in needle pitch; this means that the lower the number, the

Skechers EX1050
Skechers v Nike

finer the gauge. For example, '10' means that the distance between one needle centre and the next is 10 mm; therefore in one inch (25.4 mm) there will be 2.5 needles (E 2.5).

Machines run at speeds between 200 and 350 courses per minute (or much more on simple structures). Crochet machines can process a range of filament yarns from 20 dtex to 1000 dtex.

24.5.1 The knitting action of the crochet machine

Figure 24.10 illustrates the knitting action of a crochet machine:

1 *The inlay.* Whilst the needle is withdrawn into its trick during knock-over of the previous warp overlap, the weft inlay tube is lowered. As it traverses in an underlap shog, the weft is laid below the level of the needle and on top of the warp thread that extends from its head to the warp guide.
2 *Clearing the warp overlap.* The weft tube rises slightly on completion of its traverse movement to allow the needle to move out of its trick to clear its old warp overlap.
3 *The warp overlap wrap.* The warp guide rises between the needles and

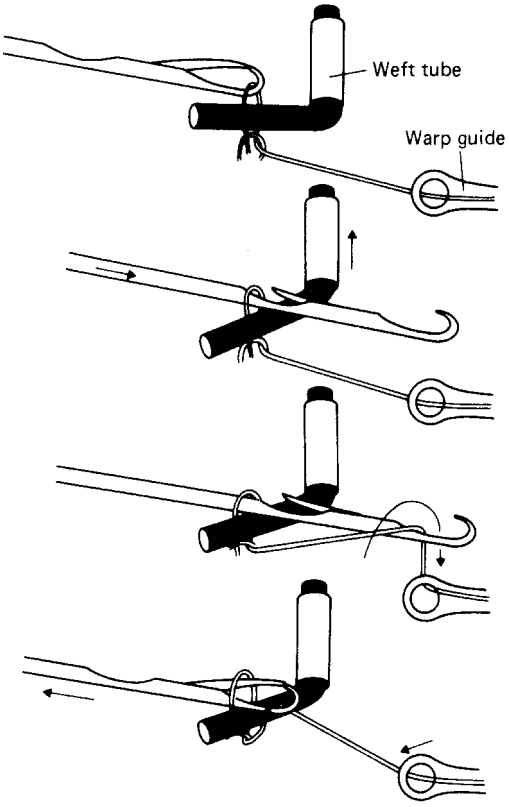

Fig. 24.10 Knitting action of a crochet machine [*Knitting International*].

Skechers EX1050
Skechers v Nike

Fig. 24.11 A range of crochet fabrics [Comez].

Skechers EX1050
Skechers v Nike

automatically overlaps from the left, lowering itself again on the right side of its needle.

4 *Warp knock-over and underlap.* The needle now retires into its trick to knock-over the old overlap, whilst the warp guide is cammed under its needle to the start position for its next overlap, thus completing the closed lap pillar. NB: The closed lap is used for the carbine needle but the alternating overlap of the open lap pillar stitch used with the conventional latch and bearded needles gives a more balanced loop structure. Tricot lapping with two guide bars produces a secure fabric which does not unrove.

A range of crochet fabrics is illustrated in Fig. 24.11.

24.6 The Waltex machine

The Italian company *Caperdoni* build a unique type of warp knitting machine termed a *Waltex* machine [4]. Instead of needles, two sets of guide tubes threaded with warp yarn alternate in wrapping a loop around each other. The overlaps on one bar of guide tubes thus intermesh towards the face at their knitting cycle (course). At the next knitting cycle, the overlaps on the second bar of guide tubes intermesh towards the back. A type of 1×1 purl warp knitted fabric is thus produced.

The spacing between the guide tubes on the bar corresponds to the gauge, 3 mm being the finest and 14 mm being the coarsest.

24.7 Warping

Warp is normally prepared as an accumulation of ends wound parallel to each other on a beam. The warp must possess the correct number of ends, all of the same length and all wound at the same tension. The ends must be parallel to one another and evenly distributed throughout the width of the beam. The spacing must be suitable for the gauge, and the width of the warp often equals the width of the needle bar in use, although it may be composed of a number of sectional beams.

Generally, warping is carried out *directly* from the yarn packages placed on a creel to the driven knitting beam because this is the fastest method. For fancy warps and sampling purposes, *the indirect* method of building a warp in sections onto a mill and then off beaming the completed warp onto the knitters beam is generally preferred, as this involves less yarn packages.

The warping of synthetic yarns involves the need for static eliminators, whilst the warping of staple fibre yarns may require the use of lint-removal arrangements and possibly the application of a lubricant to the warp. Special warping machines with reciprocating guides are employed to warp the pattern beams of multi-guide bar machines where only a few warp ends are required.

References

1. ANON., Where does the name Raschel Machine come from? *Wirkerei-Und-Strickerei Technik*, (1968), Jan., No. 1, p. 11, (translation by C. E. J. Aston).

Skechers EX1050
Skechers v Nike

2. Another possible derivation is from the name *Reichel*, a German manufacturer who, according to Willkomm (*Technology of Framework Knitting*, (1885) Part One, page 131) brought the warp loom to Berlin in 1795.
3. WHEATLEY, B., Development of tricot and Raschel machinery over the past 50 years, *Knit O'wr. Times Y'r. Bk*., (1968), 242–57.
4. CAVALCA, A., *Knit. Tech*., (June 1999), 20, 21.

Further information

ANDERSON, D., Growth of warp knitting in the United Kingdom, *Hos. Times*, (1969), 32–5, 102–6.
ANON., The Comez range of crochet machines-Crochet Charisma, *Knit. Int.* (1998), 40–1.
ANON., Comez Crochet Galloon machine technology, *Knit. Tech.*, (1998), Sept., 206–7.
ANON., Comez explores the limits of crochet technology, *Knit. Int.*, (1999), Sept., 24–7.
BROWN, F. C., Development and uses of tricot and Raschel fabrics, *Text. Inst. and Ind.*, (1970), 8, (2), 47–8.
DARLINGTON, K. D., The production of Raschel crochet fabric, *Knit. O'wr Times*, (1968), 22 July, 42–5.
DARLINGTON, K. D., Principles of warp knit apparel fabric design (part 14), *Hos. Trade J.*, (1969), Dec., 136–40.
DARLINGTON, K. D., Knitting yarns on Raschel crochet machines, *Knit. Times*, (1975), 13 Oct., 22–8.
LERCH, C., New technologies in Crochet Galloon, *Knit. Tech.*, (1998), 5, 202–6.
SMITH, D. C., The future of warp knitting, *Text. Inst. and Ind.*, (1968), 6, (2), 43–7.
SMITH, J. M., The changing face of tricot, *Text Inst. and Ind*., (1969), 7, (7), 182–4.
WEBER, K. P., Warp knitting technology (part 8), *Knit. Times*, (1971), 30 Aug., 44–9.
WHEATLEY, B., Historical survey of warp knitting, *Knit. Times Yr. Bk.,* (1974), 104–8, 243.
WHEATLEY, B., Developments in tricot machinery: the compound needle, *Knit Times Yr. Bk*., (1976), 130–1, 135.
An excellent warp knitting magazine *Kettenwirk-Praxis* (Practical Warp Knitting) is published 4 times a year in German by *Karl Mayer*, with a comprehensive English translation. It provides full information on new machines, techniques and fabric samples covering all aspects of warp knitting technology. It is also available in French and Japanese translations. Further details from Kettenwirk-Praxis, Postfach 1120, D-63166 Obertshausen, Germany.
Articles from *Kettenwirk-Praxis* (English Edition):
The compound needle, (1975), 9, (3), 5–7.
Preparation of warp beams for all textile sectors, (1977), 1, 11–12.
Equipment for monitoring the yarns on warping machines, (1977), 2, 8–13.
Tips for processing spun yarns, (1978), 2, 18–20.
Accurate yarn preparation on the HOSM pattern-beam warping machine, (1979), 2, 9–10.
The GDII semi-automatic high production rotating frame creel, (1979), 1, 6–9.

Skechers EX1050
Skechers v Nike

25

Plain tricot structures knitted with two full set guide bars

Plain tricot structures knitted with two full set guide bars are by far the most popular of all warp knitted structures and are mainly based on a two-course repeat cycle with a change of direction lap at each course. Although the majority have been made on 28-gauge tricot machines using 40 denier nylon, other gauges, yarn types and counts, and also raschel machines, are used.

The two bars make different lapping movements because, if they were both to make the same lapping movement a structure having single needle bar characteristics would be produced. Each guide bar contributes a thread to every overlap and the two underlaps can be clearly distinguished as they lap to a different angle, extent or direction. Under normal conditions, the threads of the front guide bar tend to dominate the face as well as the back of the fabric (Fig. 25.1).

25.1 Rules governing two guide bar structures

1 As the guides swing through the needles to start their next overlap, the back guide bar is first to lay its underlap on the technical back (Fig. 25.2) and the front bar is the last, so its underlaps lie on top on the back of the fabric (Fig. 25.3).
2 The front bar thread is the first to strike the needle on the return swing after the overlap (Fig. 25.4) and as its bar swings furthest to the front of the machine, it tends to occupy a lower position on the needle. If this position is retained it will show prominently on the under surface, which is the technical face (Fig. 25.2).
3 A low setting of a guide, a longer run-in, an open instead of a closed lap, or a short underlap movement, will all tend to cause a warp thread to occupy a low position on the needle, either reinforcing or reversing the normal front guide bar/ back guide bar plating relationship.

   Carefully arranged lapping movement can thus overcome the normal plating dominance of the front guide bar threads on both surfaces of the structure. A structure showing the underlaps of the front guide bar on the surface of the

Skechers EX1050
Skechers v Nike

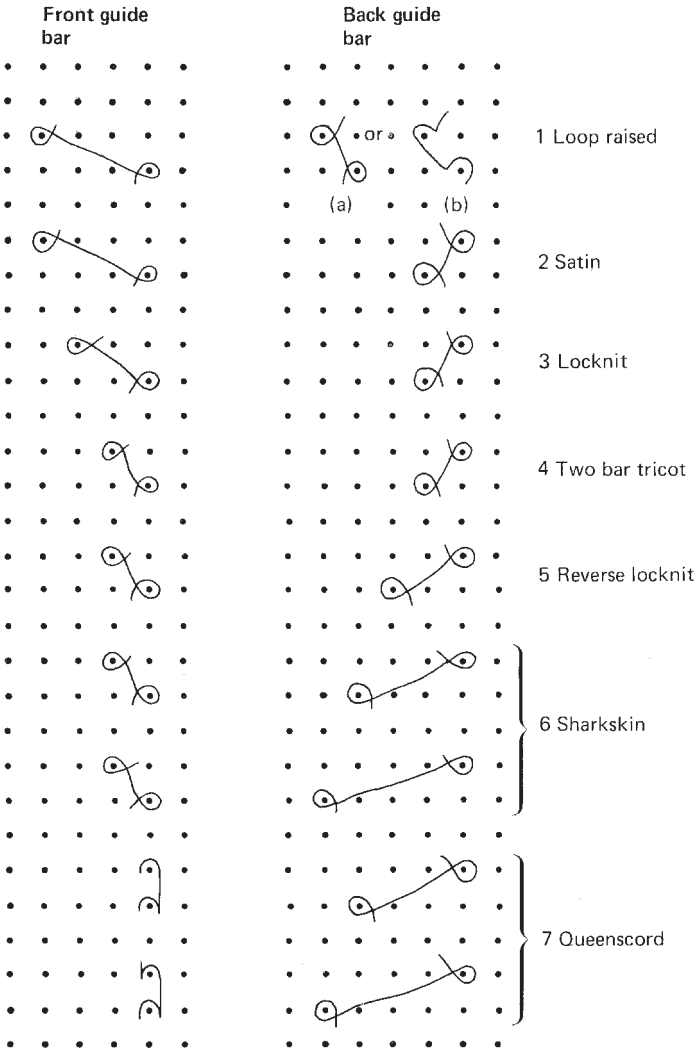

Fig. 25.1 Notations of two guide bar warp knitted fabrics.

technical back, but the overlaps of the back guide bar on the surface of the technical face, is produced if the front bar makes a 2×1 closed lap and the back bar makes a 1×1 open lap in opposition to it.

4 If the two bars overlap in opposition, the yarns tend to twist over each other in the overlap so that the back bar thread tends to partly show on top of one side limb.

5 If the two bars underlap in opposition they tend to balance the tension at the needle head, producing a more rigid upright overlap stitch. On the technical back, the underlaps will cross over each other in the middle between wales and this improves the strength of the structure.

Skechers EX1050
Skechers v Nike

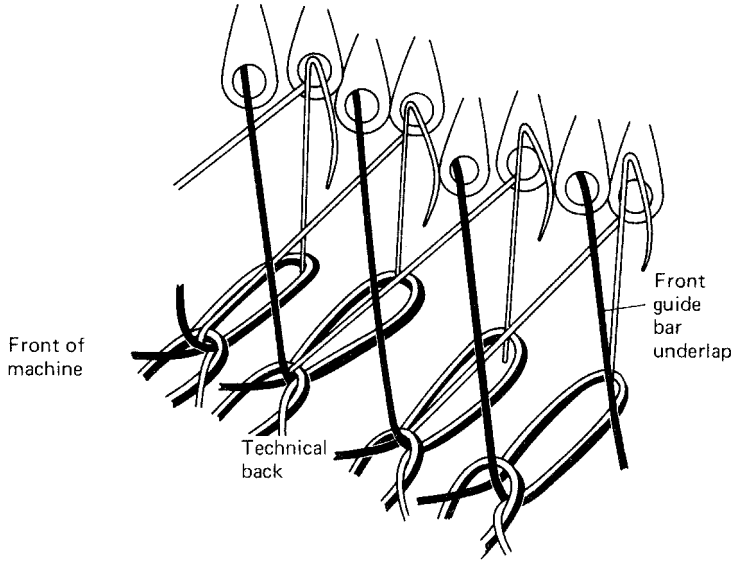

Fig. 25.2 Plating position of the front guide bar underlap.

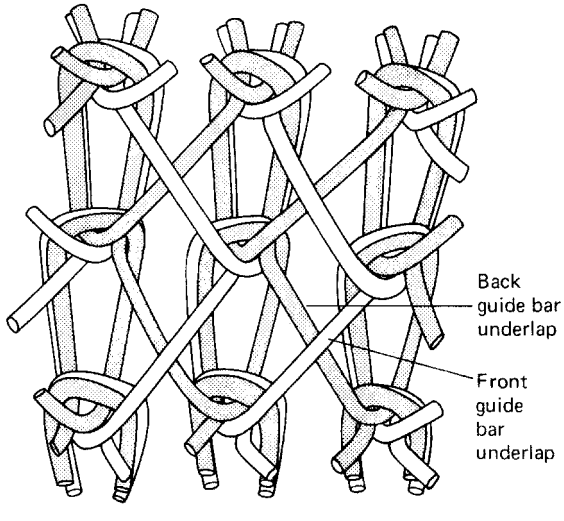

Fig. 25.3 Plating appearance on the technical back of a two guide bar fabric.

6 A short movement will cause the underlap to lie at an angle and its laps will be under the greatest tension. If the front guide bar makes the shortest underlap, it will tie the longer underlaps of the back bar securely into the rigid structure. If the front bar makes the longer underlap, this floats freely across the back and allows more movement of the yarn within the structure giving it more elasticity and a greater tendency to curl towards the technical face at the top and bottom.

Skechers EX1050
Skechers v Nike

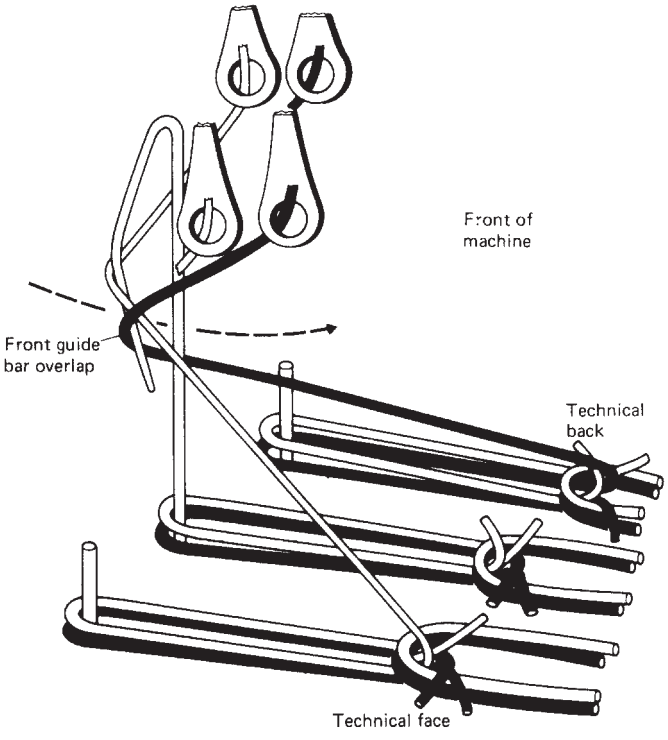

Fig. 25.4 Plating position of the front guide bar overlap.

25.2 Two bar tricot

Two bar tricot (*half jersey* in the USA) is the simplest two-bar structure and uses a minimum amount of yarn (Figures 25.3 and 25.5). The two laps balance each other exactly as they cross diagonally in-between each wale, producing upright overlaps.

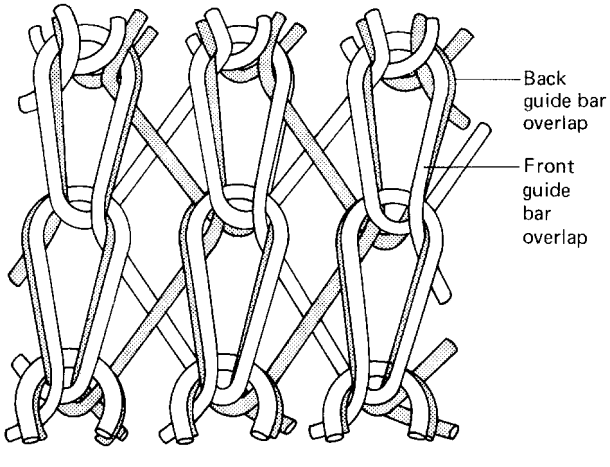

Fig. 25.5 Plating appearance on the technical face of a two guide bar fabric.

Skechers EX1050
Skechers v Nike

It tends to have poor cover and, in fine denier and in continuous filament yarn, it tends to split between the wales either during tentering or button-holing, especially if acetate or triacetate yarn is used.

25.3 Locknit

Locknit (*jersey* in the USA) or *charmeuse* (France and Germany) is the most popular of all warp knitted structures and accounts for 70–80 per cent of total output. The longer underlaps of the front bar on the back of the fabric improve extensibility, cover, opacity, and give a smooth, soft handle and good drapability. Its greater cohesion reduces snagging and splitting. Its tendency to curl towards the face at the top and bottom, and towards the back at the sides, can be reduced by heat setting.

On a 28-gauge tricot machine, a fabric might be produced from nylon yarn weighing about 30 g/m^2 for 20 denier, 82 g/m^2 for 40 denier. and 152 g/m^2 for 70 denier. In each case the finished wales per inch are more than 37. Shrinkage is generally between 20 and 30 per cent, but it can be less. An elasticated fabric for lingerie may be produced on the same gauge, using 40 denier nylon on the front bar and 40 denier spandex on the back, with a weight of 158 g/m^2.

The finest lingerie can be knitted in E 44 gauge from 22 dtex polyester with a weight of 46.1 g/m^2. Stretch lingerie can be knitted in the same gauge using 44 dtex Elastane in the back bar and 44 dtex nylon in the front guide bar.

The elasticity of locknit makes it particularly suitable for lingerie and intimate apparel. A knitting width of 168 inches (427 cm) can be finished between 92 and 100 inches (234–254 cm), which is a satisfactory width for handling these structures.

25.4 Reverse locknit

Reverse locknit (or *reverse jersey* in the USA) has a reduced extensibility and no curling, and because of the short front guide bar underlaps it has a lower shrinkage in finished width, this being often less than 10 per cent. It is used to a lesser extent than *Locknit*.

25.5 Sharkskin

Sharkskin is produced by increasing the back guide bar underlap to three or four needle spaces, making an even more rigid and heavier fabric whose stability renders it useful as a print base (Fig. 25.6).

Skechers EX1050
Skechers v Nike

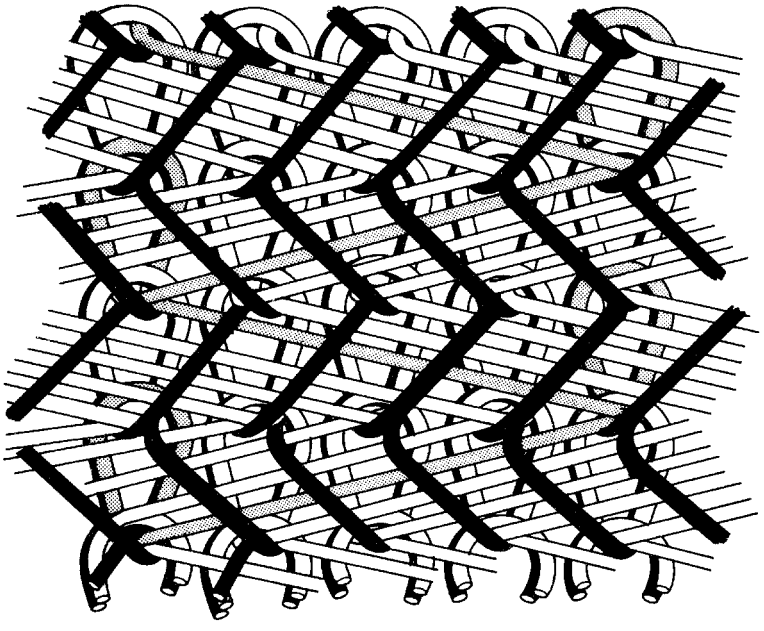

Fig. 25.6 Technical back of sharkskin fabric.

25.6 Queenscord

Queenscord has even greater rigidity than sharkskin. Because the front guide bar makes the shortest possible underlap, the pillar stitch tightly ties-in the back bar underlaps giving the fabric a shrinkage of only 1–6 per cent. The pillar stitch yarn as it passes up the wale tends to give a slight cord effect and the underlaps of the pillar are unable to balance the underlaps of the back bar so they show inclined overlap stitches (Fig. 25.7).

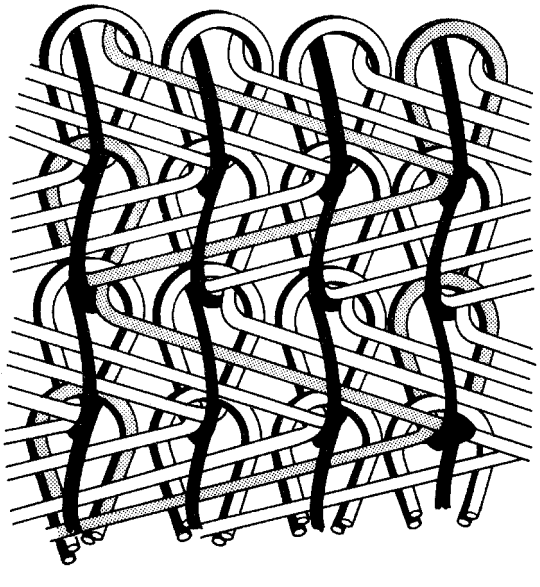

Fig. 25.7 Technical back of queenscord fabric.

Skechers EX1050
Skechers v Nike

25.7 Double atlas

In this structure, two guide bars *atlas lap* in opposition with identically balanced lapping movements, often similarly threaded with colours, in order to produce balanced symmetrical designs including checks, plaids, diamonds and circles. Areas of intense colour are obtained where both overlaps on the same needle are of the same colour, and paler areas are produced by overlaps having two threads of different colours. Repeats of 24 or 48 courses can be made but additional selvedge threads may be required to cover empty needles at the fabric edges.

In the past, special circular and rectilinear machines have been built, termed *Milanese* machines, that cause two sets of threads to make open lap atlas traverses across the needle bed without return traverses. As they reach the selvedge, the threads move into the other set (in rectilinear machines). Either single-needle (*cotton lap*) or two-needle traverse (*silk lap*) fabrics can be produced. Despite the balanced rounded loops, attractive appearances, multi-colour possibilities, handle, drapability and elastic recovery properties of Milanese fabrics, their slow rate of production has rendered them uncompetitive.

25.8 Satin

Satin has an increased front guide bar underlap (3×1 or 4×1 lapping movement) compared to locknit, giving even greater elasticity, but when threaded with continuous filament yarn, the long floats produce a lustrous light reflective surface.

25.9 Velour and velvet

Velour and *velvet* structures are based on producing long underlaps on the front guide bar that are formed into a pile surface on the technical back during finishing.

Brushed velour normally has the same lapping movement as satin, with 40–60 denier nylon or polyester yarn in the back guide bar for strength and possibly 55–100 denier viscose or acetate threaded in the front guide bar, which is broken into a pile by brushing during finishing. Velvet is produced with a longer underlap on the front guide bar, such as a 6×1 or even an 8×1 lap.

These underlaps are cropped or sheared during finishing, producing a more regular and prominent pile surface and a width shrinkage of approximately 35 per cent, compared with 50 per cent or more for velours. An open tricot lap may be made on the back guide bar to bury the pile yarn on the face and thus produce a more stable structure. On a 28-gauge tricot machine, 40 denier nylon might be used for the face yarn and 100 denier rayon for the pile, producing a structure with a finished weight of approximately 150 g/m^2.

In *raised loop velours* (Fig. 25.8), both guide bars lap in unison, producing an unstable construction with inclined loops similar to those of a single guide bar structure. Stability is achieved later during finishing when double-action pile and counter-pile rollers contact the individual filaments, raising them into a mass of fine loops and at the same time consolidating the structure. On 28-gauge tricot machines, either nylon or polyester yarn in 40 denier is used for apparel and 90 denier for furnishings.

Skechers EX1050
Skechers v Nike

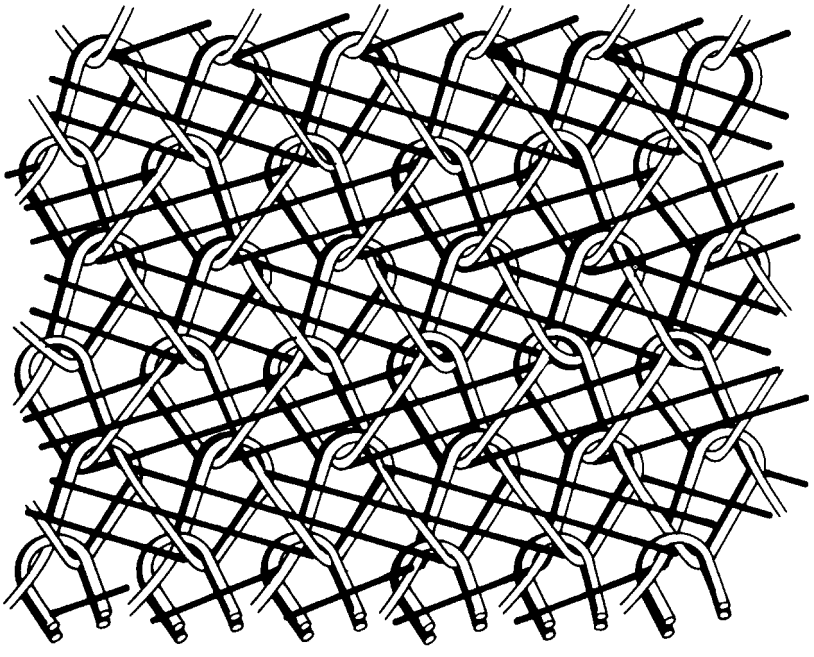

Fig. 25.8 Technical back of raised loop velour.

25.10 Overfed pile structures

Overfed pile structures are achieved usually by supplying warp at a faster rate to the back guide bar than is required for the conventional structure, so that the surplus warp forces its way through to the surface on the technical face as a pile. One example is *airloop*, which is reverse locknit having a front-to-back guide bar run-in ratio of approximately 1 to 2.3 instead of 1 to 1.2. The structure has a less definite pile and a soft hand. A crepe effect is achieved but the pile height and density tends to vary from centre to edge and the fabric is unstable and stretchy, like a single bar structure. Another structure is made with locknit if the run-in of the two bars is the same instead of having a front-to-back ratio of 4:3. Mechanisms have also been used to produce similar effects; these include a tension bar that dips to feed more yarn for either the overlap or the underlap, and patterning by selecting the tension on the warp threads to reduce the pile yarn then later releasing it to overfeed. Variation in shade is achieved by using two different coloured warps, one in each guide bar.

Skechers EX1050
Skechers v Nike

25.11 Typical run-in ratios for nylon yarns

The table below gives examples of typical run-in ratios for *standard flat nylon yarns*:

Yarn	B-B	F-B	Run-in ratio
Locknit	1-0/1-2	2-3/1-0	3:4
Reverse Locknit	2-3/1-0	1-0/1-2	4:3
Sharkskin	3-4/1-0	1-0/1-2	5:3
Queenscord	4-5/1-0	1-0/0-1	9:4
Queenscord	3-4/1-0	1-0/0-1	9:5
Raised loop	1-0/1-2	1-0/3-4	5:9
Tricot	1-2/1-0	1-0/1-2	1:1
Satin	1-0/1-2	3-4/1-0	5:9

Further information

DARLINGTON, K. D., Analysis of tricot velour fabrics, *Knit. Times*, (1976), 16 Feb., 33–37.
THOMAS, D. G. B., Warp knitted pile fabrics, *Brit. Knit. Ind.*, (1972), Oct., 98–101.
WHEATLEY, B., Production of cut velvet on Karl Mayer tricot machines, *Knit. Times*, (1972), 23 Oct., 78–82.
WILKINS, C., Warp knit terry constructions growing in importance, *Knit. Times Yr. Bk.*, (1980), 106–8.

Skechers EX1050
Skechers v Nike

26

Surface interest, relief and open-work structures

26.1 Basic principles

A warp knitted fabric with a regular surface and uniform appearance is generally produced when all of the following conditions exist:

- Each bar is fully-threaded, with every guide in the same bar carrying a similar yarn.
- Each bar makes a regular lapping movement of similar extent at each course.
- When weft is inserted it occurs with a similar yarn at regular intervals.
- Warp is supplied to each bar at a constant tension and uniform rate from course to course.

Carefully arranged variation of one or more of the above conditions enables patterns, surface interest, relief and open-work structures to be knitted, as the guide lines below indicate:

- *Variation in the threading* of one or more guide bars (guides threaded with different types of yarn or empty guides without yarn) will alter the appearance of the particular wales lapped by these guides. The effect will run the length of the fabric.
- *Variation in the extent of underlaps* produced by a guide bar will affect the appearance of those courses where the variation occurs and if the guide bar is fully-threaded the effect will run across the width of the fabric. Similar effects are obtained using weft insertion with different types of yarn, or by varying the frequency of the insertion.
- The appearance of the fabric may also be changed at certain courses by *varying the rate of warp supply* or selectively tensioning the warp threads and thus influencing the length of yarn in the underlaps.

Skechers EX1050
Skechers v Nike

26.2 Miss-lapping

Miss-lapping occurs when a guide bar (which has usually been knitting) makes neither overlaps nor underlaps for one or more courses, so that if it is a front bar, its threads will float vertically at the technical back. A simple use of this technique is in two fully-threaded 'window pane' effects. The front bar knits a pillar stitch with a striped warp, but at the courses where it miss-laps a single bar semi-openwork effect is produced by the inclined laps of the back bar which continues its 2×1 closed lap movement (Fig. 26.1).

Blind-lapping involves interrupting the warp let-off supply to a miss-lapping guide bar. As the other bars continue to knit, the courses of fabric which they produce will be forced outwards by the yarn tension to produce a raised pleat on the technical face. Blind-lapping with partly-threaded guide bars will vary the appearance across the fabric width.

The *casting-off of overlaps* can be used in the production of terry fabrics. The ground structure is knitted on alternate needles, with the remaining needles being overlapped by the back guide bar at odd courses to form the terry loops. These are cast off at even courses when this bar inlays to ensure that the pile is held in the structure.

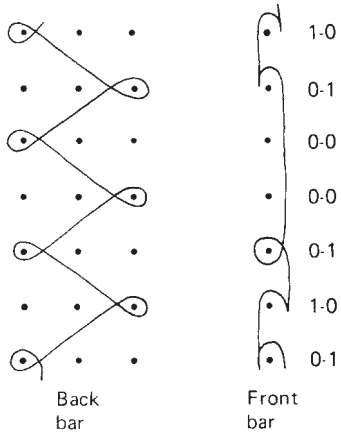

Fig. 26.1 Miss-lapping.

26.3 Part-threaded guide bars

The following are the basic rules when employing *part-threaded* guide bars for the production of nets, cords and relief designs:

- During a normal knitting cycle, *every needle must receive at least one overlapped thread* but it is not necessary for the same guide bar to supply every needle or for every needle to be overlapped by the same number of threaded guides.
- The guide bar threading for one width repeat is usually shown in its correct relative position between the needle spaces at the first link of the design, with **I** representing a threaded guide and • representing an empty guide.
- Overlaps composed of only a single thread will be inclined, whereas loops produced by the overlaps of two bars lapping in opposition will be smaller and upright.

Skechers EX1050
Skechers v Nike

- Wales will be drawn together where underlaps pass across between them and will separate at points where no underlaps cross, producing net pillars in the former and net openings in the latter (Fig. 26.2, P and O). If a full-threaded guide bar that knits at every course is also used, the effect will occur in the form of a *cord* or *relief* instead of a net.
- Symmetrical nets are produced when two identically-threaded guide bars overlap in balanced lapping movements in opposition. The threaded guides of a **I • I •** arrangement in each bar should pass through the same needle space at the first link in order to overlap adjacent needles, otherwise both may overlap the same needle and leave the other without a thread.
- In the production of nets, a guide bar should traverse *one more needle than the number of threaded guides in a guide bar* in order to cross over the threads of the other bar (Figures 26.2 and 26.3).
- In balanced nets, the width of the net pillar in wales will be equal to the threading repeat of one bar, and half the width will be equal to the number of adjacent threaded guides in one bar.
- In balanced nets, a thread of one guide bar normally laps across the threads of two repeats in the other guide bar during its complete sequence (Fig. 26.2).

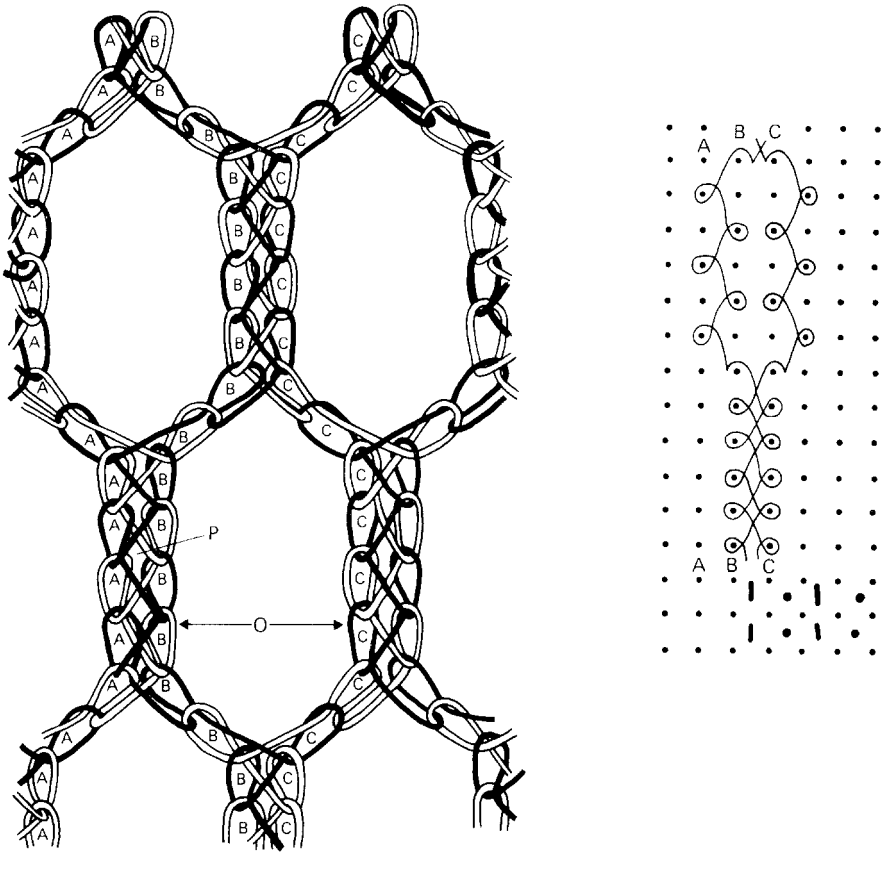

Fig. 26.2 Structure of a balanced net.

Skechers EX1050
Skechers v Nike

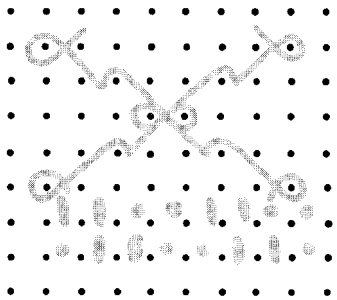

Fig. 26.3 Notation of 2 × 2 sandfly net.

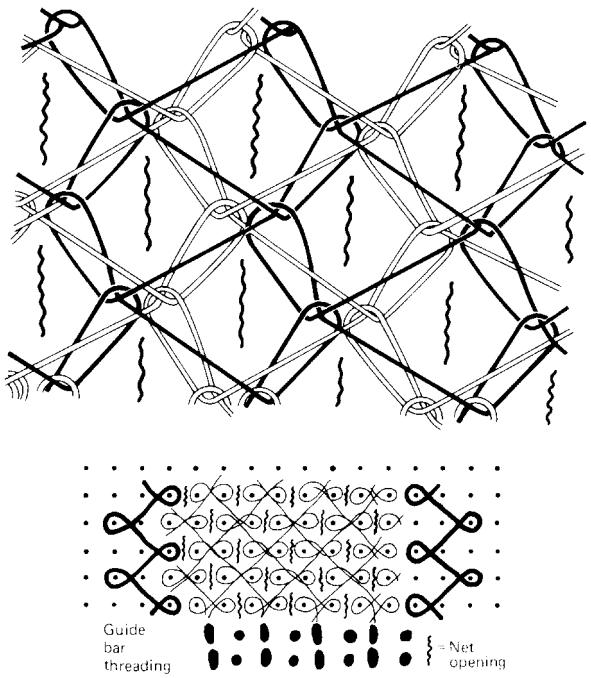

Fig. 26.4 Pin net loop structure and lapping diagram.

- A vertical net pillar extends in length as long as the threading repeat of one bar continuously re-crosses the same threading repeat in the other bar. A net opening is terminated as soon as the guides of one bar progress across towards another set of threads in the second bar. An open lap is often used for this progressive traverse (Fig. 26.2).
- In order to traverse across from one pillar to another and return by means of open laps, there must be an odd number of closed laps in the guide bar pillar lapping movement.

Pin net is the simplest net produced with alternately threaded guide bars. It uses a 2 × 1 closed lap and produces openings at every other wale and course. Its disadvantage is its lack of strength because of the small number of wales and courses involved in the repeat (Fig. 26.4).

Skechers EX1050
Skechers v Nike

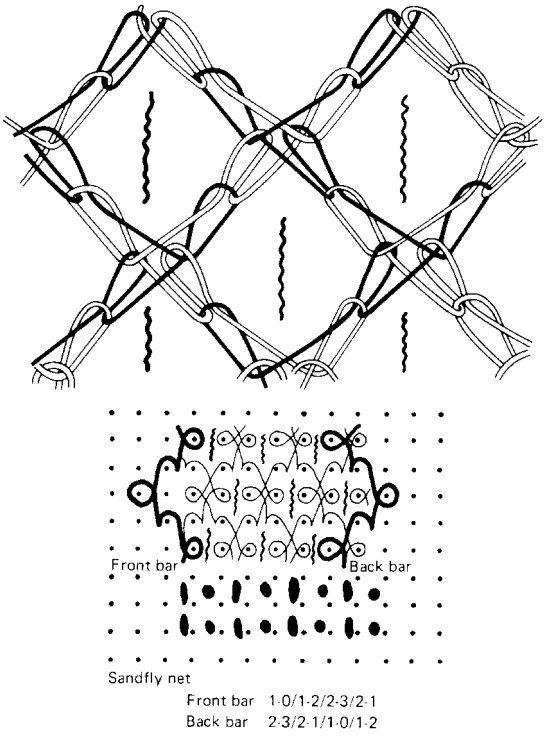

Fig. 26.5 Loop structure and notation of sandfly net.

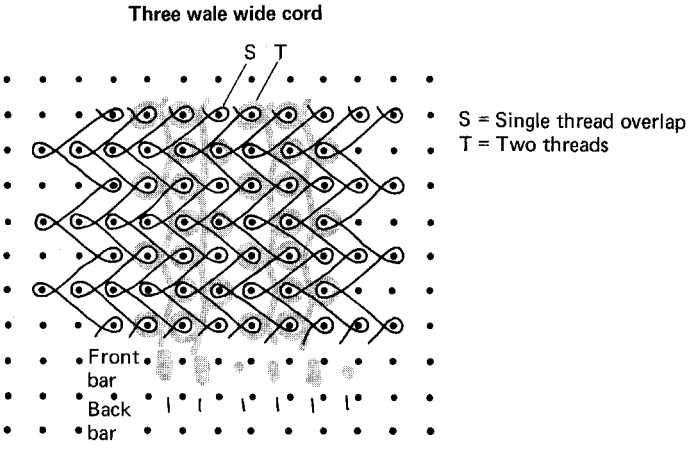

Fig. 26.6 Three wale wide cord.

Skechers EX1050
Skechers v Nike

Sandfly net is more popular. It is diamond-shaped, with staggered rows of openings occurring at every other course. The closed laps pull tight and move in the direction of the underlaps to form an opening, whilst the open laps help to form the diamond point closure of the hole (Fig. 26.5).

In *cord fabrics*, the width of the cord will be determined by the number of adjacent threads in the partly-threaded guide bar and the extent of its underlap movement (Fig. 26.6).

Skechers EX1050
Skechers v Nike

27

‘Laying-in’ and fall-plate

27.1 Laying-in and weft insertion

Laying-in is achieved in warp knitting by causing a guide bar to only underlap; its threads will be held in the technical back of the structure only if a guide bar in front of it is overlapping. The yarn will inlay on top of the overlaps during knitting so that, as the guides of the knitting bar swing through the needles for the next overlap, their underlaps will be laid on top of the inlay yarn, trapping it into the back of the fabric (Fig. 27.1).

An inlaid yarn may pass across part or all of the knitting width or it may be introduced in a warp direction. Using a *weft insertion device*, a *full-width weft* may be

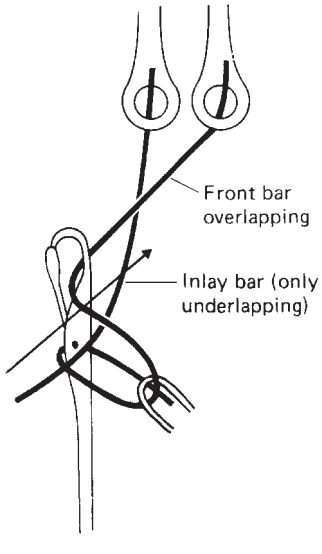

Fig. 27.1 The action of inlay in warp knitting.

Skechers EX1050
Skechers v Nike

introduced. The laying-in guide may be specially designed to take coarse or unconventional yarns or to achieve a longer than normal underlap, and a pattern mechanism designed only for laying-in may be used as in the case of weft insertion.

The raschel is particularly suitable for laying-in and sometimes the machine is designed to eliminate the swinging movement for the laying-in bars. On the crochet machine, the action of the knitting bar and the inlay bars is separately arranged and derived.

27.2 General rules governing laying-in in warp knitting

- *An inlaid yarn will pass across one less wale than a knitted yarn that has the same extent of underlap*. This is because the latter's overlap will add one further needle space traverse onto the underlap movement; thus a one-needle underlap will cause a yarn to inlay in the same wale and it will take a two-needle space underlap to cross from one wale to another. If a guide bar is fully threaded, it will put one less thread between a wale than the number of needles it underlaps.
- To eliminate the overlap movement (when using a two-link-per-course chain) it is necessary to put two links of the same height at the point where this should take place. Sometimes the pattern mechanism is arranged to run at one link per course to cater for the underlap and thus to save links.
- *The inlaid yarn will be tied in at every wale it crosses* (if the overlapping guide bar is in front of it). If the knitting guide bar is making a pillar stitch, it will be tied in by the same number of threads as the number of needles it underlaps.
- If the knitting bar *underlaps in opposition to the inlay*, it will add an extra thread for tying it into the structure. The inlay will thus be tied-in by one more thread than the number of needles the inlay underlaps.
- When the laying-in and knitting bars lap in unison, there will be one less thread available for tying in the inlay so that the inlay will be tied-in by one less thread than the number of needles it underlaps.
- If the knitting and laying-in bars underlap in the same direction and to the same extent as each other, the inlay will '*evade*' the knitting bar underlaps and will slip through onto the technical back of the structure where (under tension) it will form a straight vertical configuration.
- If a guide bar makes neither overlaps nor underlaps, it will '*miss-lap*' and its thread will form a straight vertical configuration between two wales on the technical face, as the underlaps of the knitting bar will prevent it coming through onto the technical back.
- In order to '*interweave*' an inlaid yarn vertically with a knitted yarn, it is necessary to cause it to evade for three courses and to miss-lap for one course during the repeat. This is because, with a normal two-course repeat of the knitting guide bar, the underlaps will only cross that particular wale once. In a four-course repeat there will only be two courses where the underlaps cross the wales. At one of these there is miss-lapping and at the other there is evasion.

  A vertically inlaid yarn that is positioned between two wales is termed a '*filler*' *thread*.
- If only two guide bars are employed, one knitting and one laying-in, the laying-in bar cannot produce a structure by only miss-lapping or only evading. In the first case, its yarn will fall out between the wales on the technical face and in the

Skechers EX1050
Skechers v Nike

second case it will fall out from the back of the structure. Threads making these movements can, however, be trapped if other laying-in bars are carefully arranged as to their positions and lapping movements.

- If two inlay threads cross over each other in a structure, the thread from the bar nearest to the front of the machine will show nearest to the technical back of the fabric.

27.3 Mesh structures

Mesh structures can be produced by *pillar stitch/inlay*, which may be used alone or as the ground for designs produced by pattern bars. The overlaps and underlaps of the front guide bar knitting the mesh will hold (on the technical back of the fabric) the inlay pattern threads of guide bars behind it at each course. That is the effect side of the fabric. Mesh is usually made by a single, fully-threaded guide bar knitting an open lap pillar stitch or its variant whose wales are reinforced and joined together by one or more inlay guide bars (often fully threaded).

Hexagonal mesh is achieved by wale distortion (because there are fewer underlaps joining the wales together) and by knitting tight loops in a fine yarn for the gauge of the machine. This mesh is produced by open laps followed by a closed lap which causes the lapping to alternate between two adjacent wales and forms the underlaps and inclined overlaps which close the top and bottom of the staggered mesh holes (Fig. 28.7).

Three-course tulle is the standard mesh for raschel lace.

27.4 Fall-plate patterning

The fall-plate loop is achieved by a mechanism (Fig. 27.2) exclusive to latch needle raschel machines, although a similar effect to fall-plate loop structure, termed *plaiting*, can be achieved on crochet machines by wrapping a loop below the chain loop on the latch of the needle as it is moving out to clear.

In both arrangements, the fall-plate loop slips from the open lap immediately after formation and joins the technical back of the old loop from the previous course without being pulled through it.

The fall-plate is a thin metal blade attached to a bar and extending the full width of the machine. It is mounted between the guide bars and is attached to the guide bar brackets so that it makes the same swinging movement but it also achieves a vertical upwards and downwards movement described by the American term '*chopper bar*'. The vertical movement of the fall-plate can be obtained from a pot cam on the main cam-shaft and is adapted through linkages.

Figures 27.3 and 27.4 illustrate the action of the fall-plate. The raschel knitting action is normal; the guide bars swing through the needles as they rise, then shog for the overlap and return to the front of the machine. The fall-plate descends, contacting the threads from guide bars in front of it as they pass onto the latch of the needle.

As the fall-plate descends, it causes the overlaps formed by those threads to be pushed downwards and off the latches, to join the loops of the previous course. They are knocked-over with them whilst the overlaps of the guide bars behind the fall-plate remain unaffected in the hooks of the needles, ready to form the next course.

Skechers EX1050
Skechers v Nike

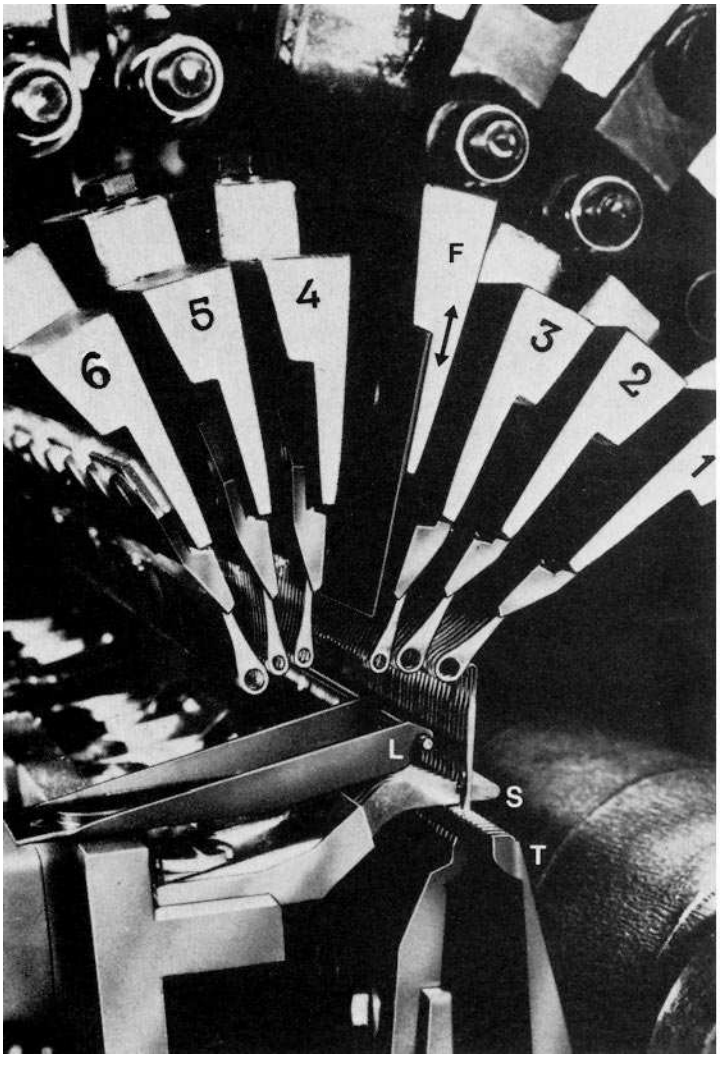

Front of machine

Fig. 27.2 Multi-purpose fall-plate raschel machine [Karl Mayer]. Bars 1, 2, 3 – fall-plate guide bars; bar 4 – knitting guide bar; bars 5, 6 – inlay guide bars. L = latch opening wire; S = holding-down sinker; T = trick plate; F = fall-plate.

As the needles rise after knocking-over, the fall-plate is lifted to its high, inoperative position where it remains until the next knitting cycle.

It is necessary to knit the ground structure overlaps on the guide bars behind the fall-plate because these are unaffected by its descent. Every needle must receive at least one ground structure overlap. It is preferable to overlap the fall-plate yarn in the opposite direction to the ground overlaps as this is less likely to cause the ground overlaps to be lower on the needle stems and thus to be pushed off the latches as the fall-plate threads are pushed down.

As fall-plate yarn is not knitted by the needle hook, fancy or heavy yarns may be used in partly- or fully-threaded guide bars. Fall-plate designs use either open or closed lap movements to produce attractive relief designs whose overlaps as well as underlaps show clearly on the technical back, often as 'cup handle' shapes (Fig. 27.5).

Skechers EX1050
Skechers v Nike

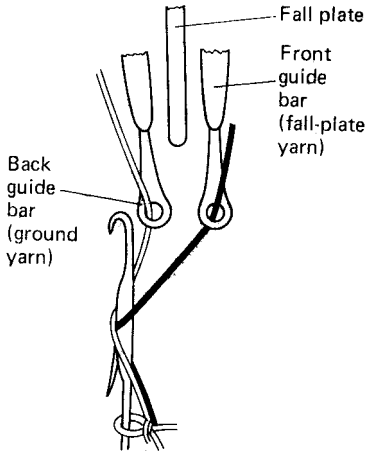

Fig. 27.3 Fall-plate raised out of action.

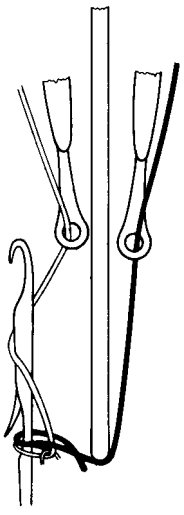

Fig. 27.4 Fall-plate lowered into action.

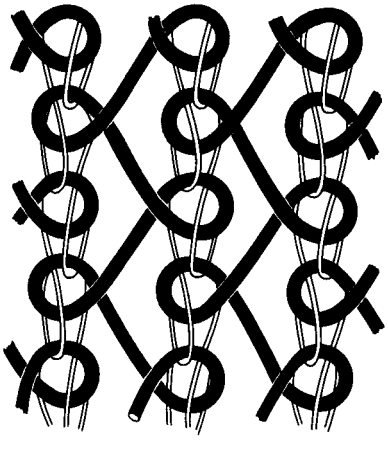

Fig. 27.5 Simple fall-plate loop structure.

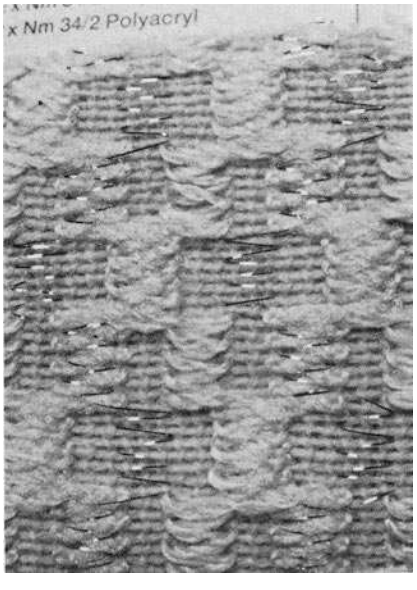

Fig. 27.6 Raschel fall-plate fabric showing on the technical back of a pillar inlay structure.

The connection of the fall-plate pattern yarns to the ground structure is peculiar to its design (Fig. 27.6). The loop is held down at the technical back of the ground underlap of the course above, as well as by the underlap of the course at which it appears.

The fall-plate underlap floats loosely across the fabric up to its next overlap. The overlaps appear at the course previous to that at which they were formed.

Multi guide bar machines having fall-plate pattern bars controlled by an auto-

Skechers EX1050
Skechers v Nike

matic overlap are used to produce three-dimensional '*embroidery*' or '*broche*' relief designs in lace, particularly for curtains. These pattern bars will be positioned at the front of the machine whereas the ground guide bars will be placed behind the fall-plate, and any inlay pattern bars will be placed behind these bars.

A fall-plate raschel termed the *Co-we-nit* was introduced by *Karl Mayer* in 1967. It was designed specifically to knit a woven-like structure. Despite arousing considerable interest, it was commercially unsuccessful for the following reasons:

- Its design scope was limited.
- Co-we-nit structures were difficult to mend.
- Productivity was low.
- It required better quality yarns than a weaving loom in order to produce an equivalent fabric.

The machine produced two separately-timed overlap actions, one for knitting the pillar stitch of the front bar, the second for the weft bar behind it that open laps in the same direction. The weft bar open laps are then pushed from the needle hooks by the fall-plate so that they appear to be an inlay. The two back guide bars, gauged twice as fine as the needle bar, provide vertical warp threads that 'interweave' with the fall-plate weft yarns, using carefully arranged evasion and miss-lapping movements. A half-needle space evasion movement can cause only one of the two threads of the warp bar to cross over the weft on the technical back of the structure, which is the effect side.

27.5 Full-width weft insertion

When the needles are in the lowered position during the warp knitting cycle, a so-called *'open shed'* effect is created at the back of the machine. It is then possible for a weft yarn, laid across the full width of the machine, to be carried forward by special weft insertion bits over the needle heads and deposited on top of the overlaps on the needles and against the yarn passing down to them from the guide bars. In this way, the inserted weft will become trapped between the overlaps and underlaps in the same manner as an inlay yarn when the needles rise but, unlike the latter, the weft will run horizontally across the complete course of loops.

This technique is less restrictive for fancy and irregular yarns than for inlay and, as a weft covers the full fabric width, yarn can be supplied from individual packages. It has the major advantage that weft can be prepared and laid in advance of the timing of the insertion so that it has less effect on the knitting machine speed.

By 1938, a prototype FNF compound needle tricot machine could insert weft whilst knitting at 800 courses per minute. It was, however, *Liba* who pioneered the modern principles of single reversing weft insertion for coarse-gauge raschels and magazine weft insertion from a stationary package creel for fine-gauge compound needle tricot machines, with their *Shussomat* [1] and *Weftloc* models introduced in 1967 and 1970 respectively.

The single traversing weft is laid across the back of the machine by a cable-driven carrier that reciprocates on two parallel rods. At the end of the traverse, the selvedge return loop passes around a vertical pin that holds the weft in place until required, whilst the carrier continues its traverse. The weft pins are attached to the needle bar so that the two descend together, releasing the full-width weft at the moment when

Skechers EX1050
Skechers v Nike

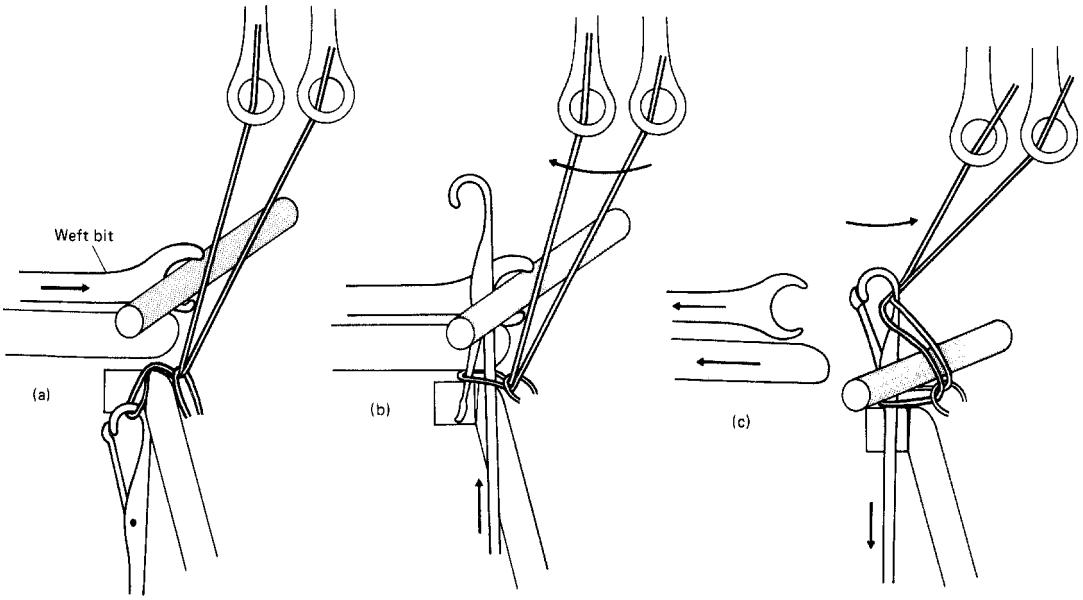

Fig. 27.7 Weft insertion principles.

the weft bits, one above every alternate sinker, advance over the lowered needle heads to insert the weft (Fig. 27.7).

This method of weft insertion produces a selvedged effect with the weft rising at the selvedge from one course of insertion to the next. The knitting width is sometimes divided into a number of knitting widths, each having a reciprocating weft carrier. In this way, narrow-width fabrics suitable for dish-cloths can be produced. Insertion of the cotton weft may be interrupted between each piece, triggering a scanning electronic eye that operates a hot wire to melt the empty nylon pillar stitches across the course. Thus, each piece is automatically separated and heat-sealed.

Machines with inlay and knitting bars are used in the production of sun filter curtaining. These employ a pattern chain control of the weft insertion from one end of the machine so that insertion can occur as required from a choice of a number of different wefts. Speeds of about 500 courses per minute are possible with this type of machine.

27.6 Magazine weft insertion

The principle of magazine weft insertion (Fig. 27.8) is to supply, for example, 18 or 24 ends of yarn from a stationary creel to an insertion carriage. With a weft insertion speed of 6500 m/min, the speed of the weft yarn will be only 320 m/min because multiple wefts are simultaneously being laid onto the conveyor to be fed individually to the knitting machine. The carriage traverses across the back of the machine, laying the weft yarns in parallel form onto the receiving pins of two magazine chains, one at each side of the machine.

The chains convey the weft to the weft insertion bits at the rate of one weft per

Skechers EX1050
Skechers v Nike

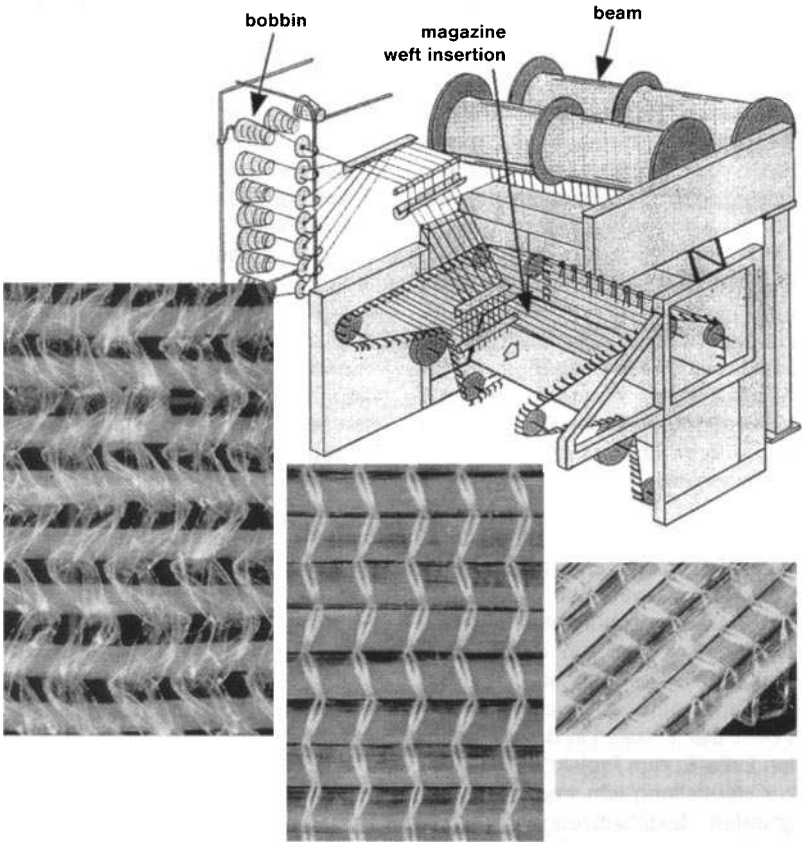

Fig. 27.8 Magazine weft insertion [Karl Mayer].

knitting cycle. As the carriage reverses its traverse, each return weft is placed around a receiving pin 18 or 24 positions further along the chain than the pin that first received it, in order to accommodate all the parallel weft yarns. Once the weft has been inserted into the fabric, the selvedged edges must be trimmed free of the receiving pins as the chains continue their rotation. It is essential in these cut selvedged fabrics to tightly grip the weft within the structure, otherwise wefts may slip or be pulled out; closed rather than open laps tend to be better for this purpose. Patterned effects are achieved by the package arrangement on the creel. Speeds of about 700–800 courses per minute are obtained [2].

Other methods, such as the use of a propeller for rotating the weft packages on a carousel, have been employed but have been found to be too restrictive.

27.7 Cut presser and miss-press structures

On certain bearded needle tricot machines, the possibility exists of pressing only selected needle beards (*cut presser work*) or only pressing beards at selected knitting cycles (*miss-press work*).

Cut presser machines are generally in tricot gauges from 12–24 and knit

Skechers EX1050
Skechers v Nike

either staple spun yarns or textured yarns for blouses, dress-wear, baby-wear and shawls.

The fibre presser blade has sections which are cut away so that needle beards that correspond to these sections are not pressed at that cycle. Although needles can by this means hold their loops for a number of knitting cycles, their beards must be pressed at least once during the pattern repeat. All needle beards in the knitting width are eventually pressed by contact with the solid portions of the presser, as a result of the presser being shogged sideways by means of a push-rod and chain links in a similar manner to a guide bar.

For the production of simple *shell-stitch* fabrics, the presser is cut to the threading of the single guide bar whose total of adjacent threaded guides is the same as the total of adjacent empty guides.

For example, a 4 × 4 cut presser (Fig. 27.9) will press the four beards of the needles overlapped by the guide bar and will not press the four beards corresponding to the empty guides, so that these needles will hold their loops from a previous course or courses. If overlapped needles are not pressed, 'tuck stitches' will be produced, whereas drop stitches would occur if non-overlapped needle beards were pressed. It is thus necessary for the presser bar to be shogged sideways in unison with the guide bar.

In order to connect the sections of wales together, an atlas traverse lapping movement must be made across at least two more needle spaces than the number of adjacent empty guides, so that in the above example at least six needle spaces must be covered.

As held stitches are produced, the wales will contain different numbers of loops and some wales will contain successive loops that were actually knitted many cycles

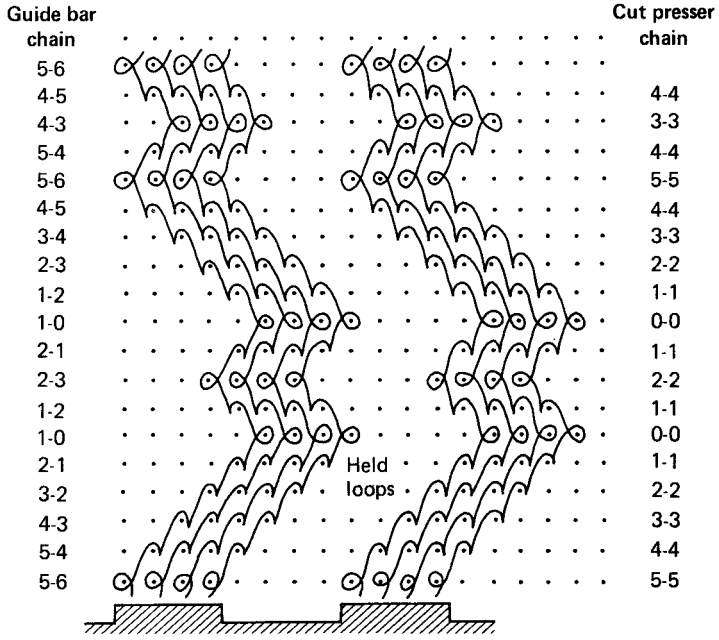

Fig. 27.9 Cut presser lapping movement.

Skechers EX1050
Skechers v Nike

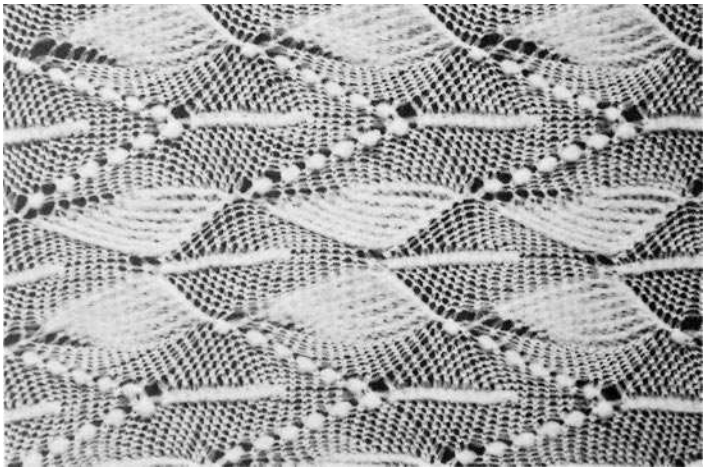

Fig. 27.10 Shell stitch cut presser fabric.

apart in the sequence. Tension within the fabric produces distortion so that the wales lose their parallel alignment and a three-dimensional surface appearance is created (Fig. 27.10).

At the point where the atlas traverse changes direction, the absence of connecting underlaps on the far side of the traverse change produces unbalanced fabric tension that draws the two adjacent wales apart.

More complex effects may be achieved by employing one or more of the following techniques:

- A more complex lapping movement;
- Using more than one partly-threaded guide bar;
- Accumulation of overlaps without pressing;
- Double needle overlaps.

Most cut presser machines also have a plain presser bar that, when brought into action by means of a pattern chain, cancels out the effect of the cut presser, but this necessitates the use of an additional full-threaded guide bar.

27.8 Spot or knop effects

Spot or *knop* effects require the use of both a plain presser and a cut presser (Fig. 27.11). The front and back guide bars might be full-threaded and knit a locknit or reverse locknit in co-operation with the plain presser. At various selected points in the production of the fabric, these two bars stop overlapping and the plain presser is withdrawn so that the cut presser operates in conjunction with a partly-threaded middle guide bar to make the knop overlaps.

Adjacent needles hold their ground loops until fabric knitting recommences, when the excess knop loops will be thrown upwards in a relief effect on the technical face. When not knitting, the back bar must evade the middle bar and the middle bar must evade the front bar, otherwise their vertically-floating miss-laps will protrude between the wales on the technical face.

Skechers EX1050
Skechers v Nike

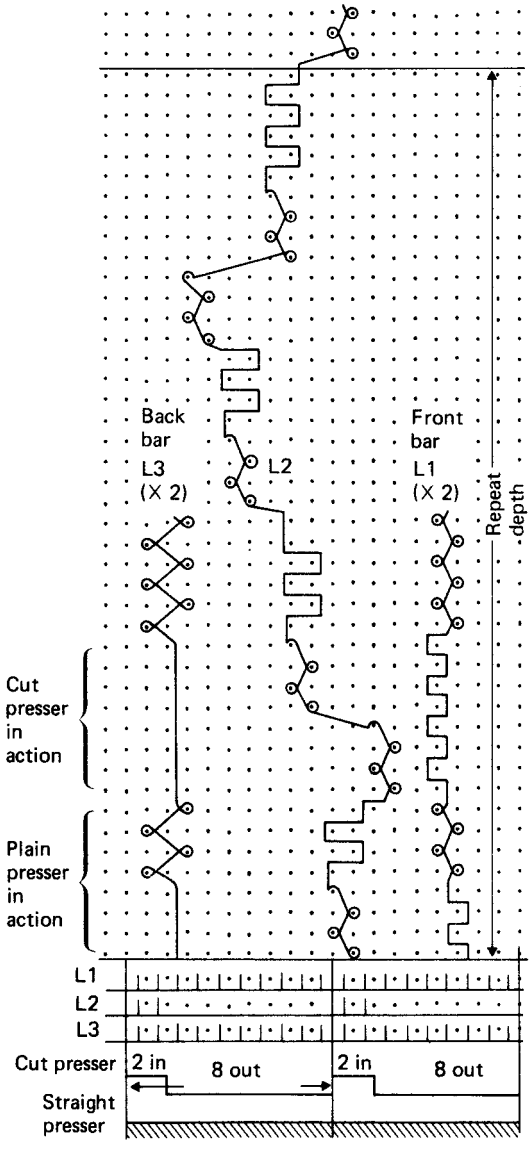

Fig. 27.11 Cut presser knop fabric.

Selective miss-pressing of all needle beards is achieved on modern machines by turning an eccentric disc through 180 degrees inside the circular opening of the presser bar. In one position of the disc, the presser advances sufficiently to close the beards. In the other position, the presser does not advance to contact the beards.

27.9 Terry by the press-off method

The press-off method has proved particularly suitable for knitting terry fabrics for towelling and fitted bed linen. A compound needle tricot machine has been spe-

Skechers EX1050
Skechers v Nike

cially developed for the technique. In the needle bar, which is in the gauge range E 20 to E 24, normal compound needles alternate with large-head needles. The guide bars are threaded **I • I •** with the ground guide bar overlapping only the normal compound needles and the terry guide bar overlapping only the large-head needles. In the latter case, this occurs only at alternate courses so that at the next knitting cycle the large-head needles knock over the terry pile loops without receiving a new overlap, thus pressing-off their loops.

Single-sided terry can be knitted with three guide bars. The front bar produces the ground chain stitch, the second bar inlays the ground, and the third bar alternately overlaps and inlays the terry. After the overlaps of the odd courses have been pressed-off, the inlays of the even courses are held in the structure by the ground bars. Terry loops 3 to 4 mm high are produced from plied cotton yarn of Nm 85/2 in a weight range of 135 to 300 g/m^2.

Double-sided terry requires a fourth guide bar, in front of the chain stitch ground bar. This overlaps at odd courses over the normal needles and overlaps at even courses over the large-head needles, and is pressed-off the latter. The machine has special brushes to draw these pressed-off loops from the centre of the fabric so that they appear on the technical face, whereas the inlaying terry guide bar shows its terry loops on the technical back. Double-sided terry fabrics are in the weight range of 220 to 450 g/m^2 [3].

References

1. DARLINGTON, K. D., Liba Shussomat, *Knit. O'wear Times*, (1968), 22 Jan., 60–1.
2. ANON., Liba introduces new version of Weftloc insertion machine, *Knit. Times*, (1982), 8 Feb., 63–7.
3. BOHM, C., Warp knit terry, *Knit. Tech.*, Vol. 9, (1987), No. 6, 441–446.

Further information

DARLINGTON, K. D., New Mayer presser control, *Knit. Times*, (1967), 10 April, 37.
DARLINGTON, K. D., Weftloc: weft insertion knitting, *Knit. Times*, (1973), 27 Aug., 44–8.
NIEDERER, K., Fabric engineering for weft insertion, *Knit. Times*, (1974), 26 Aug., 47–51.
REISFELD, A., Warp knitted fabrics and products, *Knit. Times*, Part 9, (1969), 15 Dec., 28–43; Part 10, (1970), 23 Feb., 42–51; Part 11, (1970), 20 April, 38–42; Part 13, (1970), 17 Aug., 32–43; Part 22, (1972), 10 July, 48–59; Part 23, (1972), 13 Nov., 85–103.
WHEATLEY, B., RM 6-8 VS-W weft insertion machine, *Knit. Times*, (1973), 9 April, 30–38.
WHEATLEY, B., Knitting of outerwear on tricot and Raschel machines (part 15), *Knit. Times*, (1973), 12 Nov., 77–86.

Skechers EX1050
Skechers v Nike

28

Multi guide bar machines and fabrics

28.1 The development of raschel lace

Karl Mayer introduced the first raschel lace machine in 1956, using 12 guide bars. By 1964, 36 guide bars were achieved, followed by 42 in 1968. Electronics began to replace mechanical guide bar control and, in 1981, 42- and 56-guide bar raschels without conventional chains were introduced.

In 1985, the first '*Jacquardtronic*' lace raschel with 78 guide bars, electronic pattern guide bar control, and electronic jacquard selection was unveiled. In 1990, the '*Textronic*' lace raschel with a fall-plate and particular configuration of 53 guide bars was introduced, to knit surface-interest patterns resembling embroidery with different lace ground variations.

28.2 The success of raschel lace

Many factors (outlined in the following list) have contributed to the success of warp knitting in the production of lace, curtain-net and elastic fabrics:

- The inability of the slow, traditional lace and net machines to meet rapidly expanding demands for these types of fabrics.
- An availability of fine, strong, uniformly regular, continuous filament yarns ideally suitable for high-speed warp knitting, such as nylon for lace, polyester for curtaining, and elastomeric yarns for elastic laces.
- The greater suitability of the raschel machine for utilising synthetic filament yarn than traditional lace machinery, with higher productivity. It offers the benefits of low capital costs, reduced requirements for ancillary equipment, less operative supervision, and simpler pattern-changing facilities.
- Ability to achieve satisfactory imitations of mesh constructions such as tulle and marquisette by pillar inlay lapping movements.
- Development of specific purpose machines with higher speeds and greater patterning capabilities (Fig. 28.1) encouraged by the introduction of the multi-guide

Skechers EX1050
Skechers v Nike

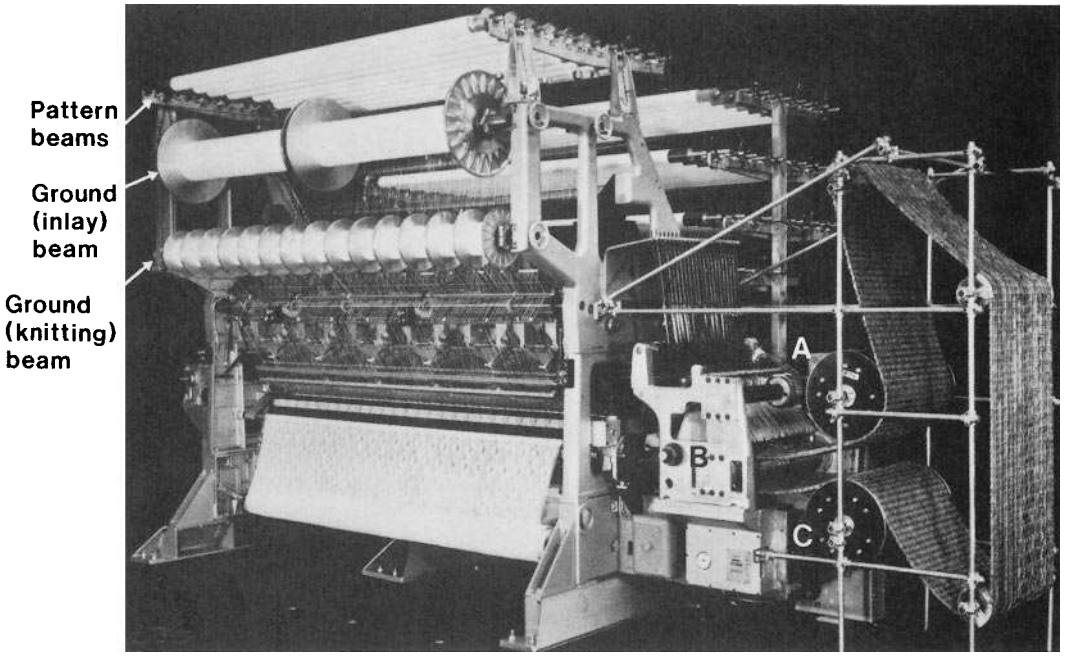

Fig. 28.1 42-bar raschel lace machine [Karl Mayer].

bar lace raschel in 1956 (with its separation of full-sett ground bars from the simple light-weight patterning bars together with the elimination of unnecessary movement and weight).

- Improvements in patterning techniques such as jacquard. These have provided sophisticated design potential for a widening range of end-uses beyond the confines of conventional guide bar lapping facilities.

28.3 Pattern guide bars

On conventional multi guide bar machines, pattern guide bars are only required to supply one thread each for a pattern repeat width. Different yarn counts or types are used to achieve greater effect. To use ordinary guide bars for this purpose would be uneconomical as their weight would lower the machine speed. Also, only about eight to thirteen shogging or displacement positions are available so the patterning capabilities would be severely restricted.

Instead, light-weight pattern guide bars are used that have drilled holes to which *finger guides* are screw-attached, only at the required spacing for the pattern. These bars are indirectly shogged by a lever arrangement (B) at a rate of one link per course (C), both for inlay and for fall-plate or embroidery patterning [1] (Fig. 28.2). In the last 2 cases, an automatic overlap mechanism is used.

Skechers EX1050
Skechers v Nike

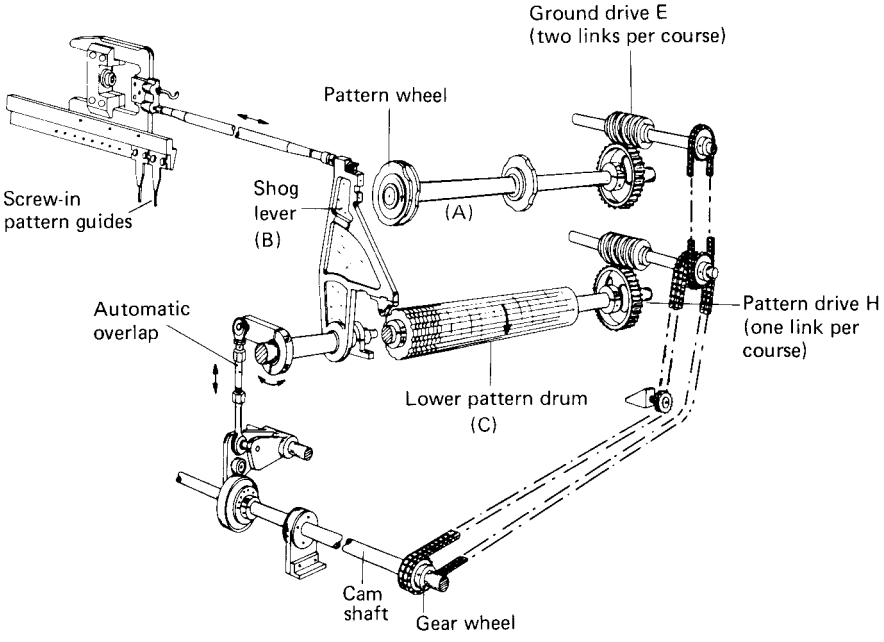

Fig. 28.2 Automatic overlap guide bar drive.

28.4 Guide bar nesting

Up to four pattern bars can be '*nested*' together so that their guides converge into the same displacement line. They swing as a single guide bar but they are shogged independently, although guides of bars in the same nest cannot cross or approach within two needle spaces of each other (Fig. 28.3).

On the 42-bar lace raschel, thirteen displacement lines are available. The front two are conventional guide bars for knitting the ground, the next may be a conventional bar for draw-threads when knitting trimmings, or it can be one of two nests of two pattern bars, and there are another nine nests each of four bars.

28.5 Multi-bar tricot lace machines

Multi guide bar tricot machines with between eight and eighteen guide bars have been built in gauges of E 24–28 for the production of fine gauge lace [2]. Two fully-threaded bars are used to knit the ground, such as reverse locknit or queenscord, with fine yarn such as 44 dtex nylon. Pattern bars behind the ground bars are used for inlay effects. Those in front are employed for embroidery designs in the form of overlaps and underlaps, in a textured yarn so that they stand out in relief on the technical back. The knitted overlaps show through from the face and the underlaps float across the back (Fig. 28.4).

Skechers EX1050
Skechers v Nike

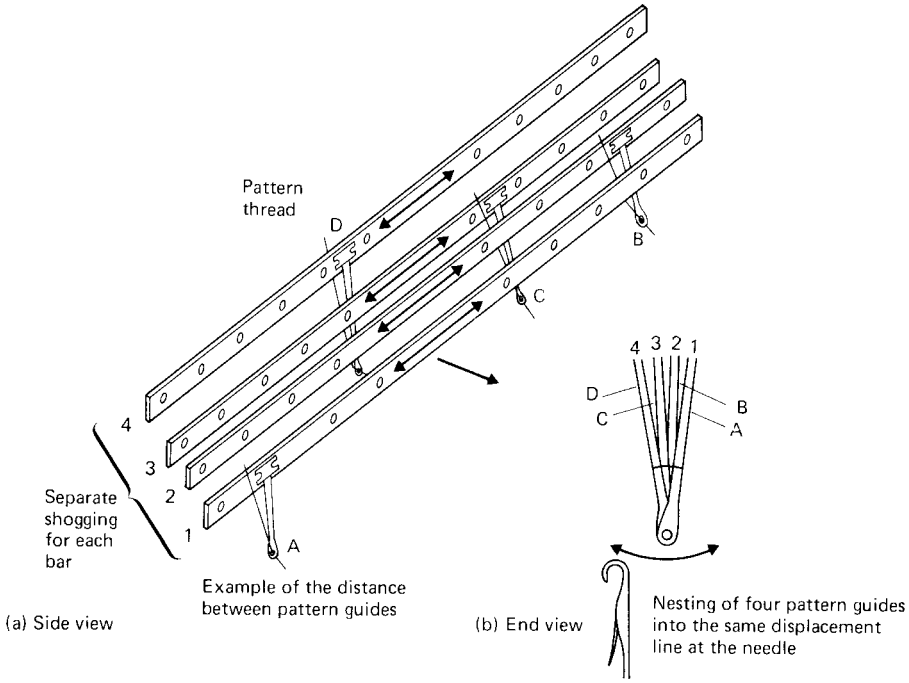

Fig. 28.3 Raschel lace guide bar nesting.

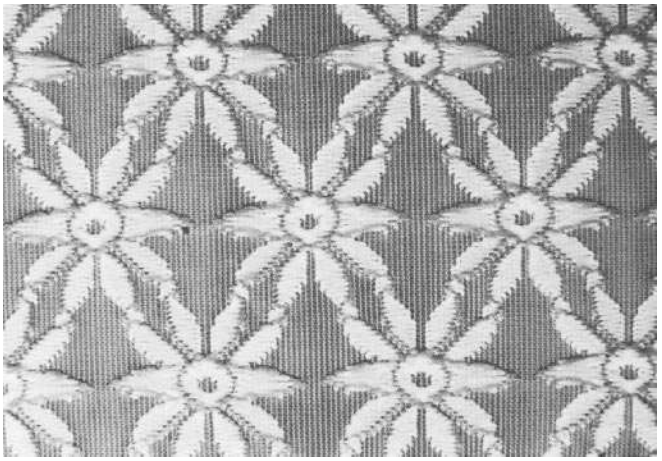

Fig. 28.4 Embroidery patterning.

28.6 Chain links and electronic control of shogging

The cost of chain links and the labour involved in chain assembly are major problems with multi guide bar machines.

Ground guide bars are generally controlled directly from links or pattern wheels moving at two links per course (A). The pattern guide bars are controlled indirectly through shogging levers (B) (Fig. 28.2), using only one link per course (either they

Skechers EX1050
Skechers v Nike

only inlay or they are caused to automatically overlap in the same direction after the underlap is completed by an eccentric working onto the shogging levers).

Leverage in the shogging arrangement can reduce the height and weight of the links. Split-chain drums that can be stopped during miss-lapping in between motif patterns can further reduce the link requirements. However, lace designs can still involve as many as 15 000 links, which can weigh over a tonne (1000 kg).

28.7 The summary drive

The *Karl Mayer* electronically-controlled SU guide bar shogging arrangement [3] now employed on multi-bar lace machines is typical of the efforts being made to replace chain links with a simpler and cheaper method for changing patterns more rapidly. It also eliminates the time and cost of assembling, dismantling, and storing the chain links.

The shogging data is supplied to the memory of a microprocessor by means of disc or other data carrier (Fig. 28.5). Each pattern bar has its own unit consisting of six eccentric cams that, although mounted on six separate continuously rotating shafts, are not fixed to rotate with them. On either side of each cam is an electro-magnet that, when it receives a signal from the microprocessor, locks the cam onto its shaft causing the cam to rotate, moving its push rod forward like a piston so that the roller in front causes the vertical segmented bar to move upwards. At the top of the bar, the vertical movement is transformed into a horizontal shogging motion.

When the microprocessor sends a signal to the other electro-magnet, the magnet locks onto the rotating shaft and rotates with it, pulling the roller out of vertical, causing it to be lowered and shogging the guide bar horizontally in the opposite direction.

Each of the six eccentric cams produces a different extent of shogging movement when activated. The bottom cam shogs the guide bar by 1 needle space, the second shogs the guide bar by 2 needle spaces, the third by 4, the fourth by 8, and the fifth and sixth each shog 16 needle spaces. If the first and second cams are in action, a shog of 3 needle spaces will be achieved and so on. Any number of needle space shogs from 1 up to a total of 47 can be obtained. On some machines there is another eccentric that, when in action, produces an automatic overlap; for example, for fall-plate pattern guide bars.

28.8 Raschel mesh structures

Mesh structures may be used alone or as the ground for designs produced by pattern bars (Chapter 27). The three main raschel lace gauges are: 28-gauge (E 14), which is coarse gauge (Fig. 28.6) and is mainly used for dress-wear with the designs being emphasised by heavy outline threads; 36-gauge (E 18) which is the standard gauge (Fig. 28.7); and 48 gauge (E 24) which is fine gauge, provides better definition in designs, and is also used for lace edgings, etc. (Fig. 28.8).

Three-course tulle is the standard mesh for raschel lace, producing three courses on each wale with the inlay reinforcement lapping in unison. When the pillar and inlay lap in opposition, a square mesh known as *cross tulle* or *bridal veil net* is produced. *3/2 tulle* produces alternate rows of smaller mesh and its lapping covers three

Skechers EX1050
Skechers v Nike

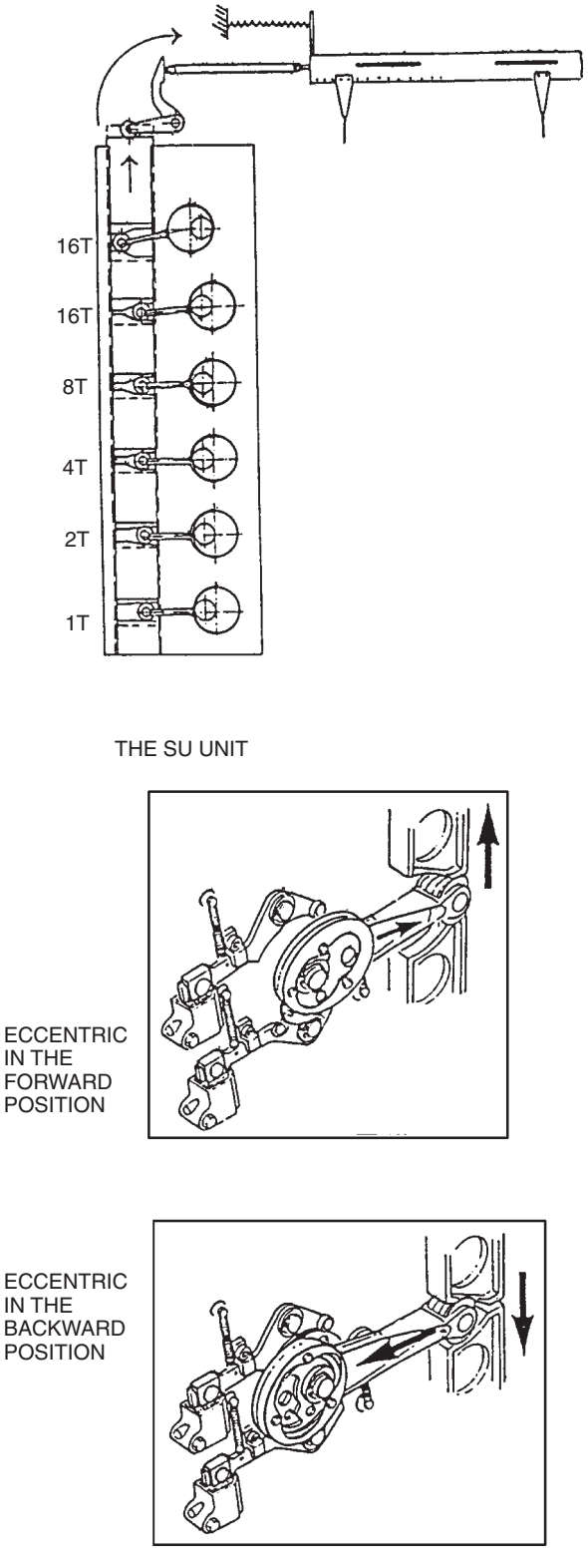

Fig. 28.5 The summary drive (SU) electronic patterning mechanism [Karl Mayer].

Skechers EX1050
Skechers v Nike

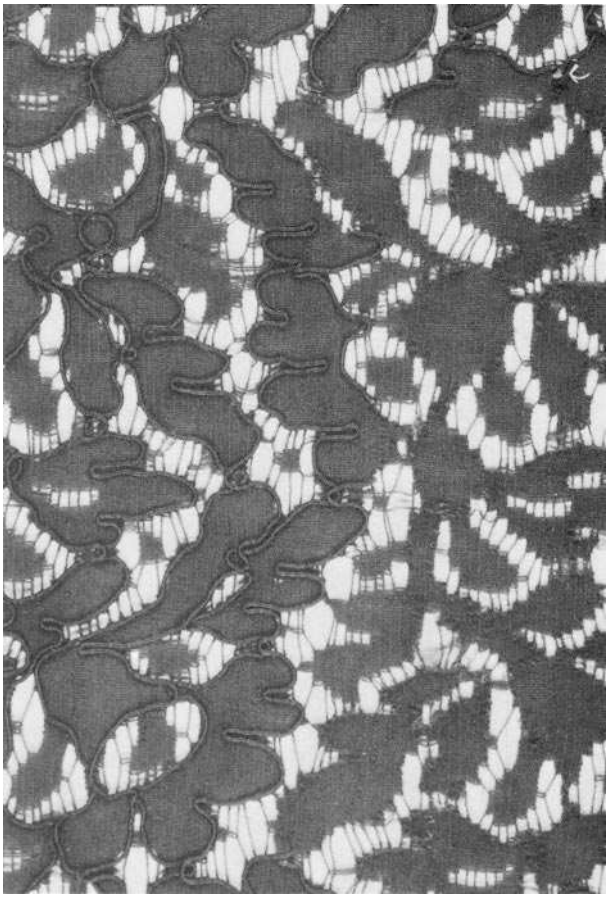

Fig. 28.6 28 gauge (E 14) pillar inlay using outline threads [Karl Mayer].

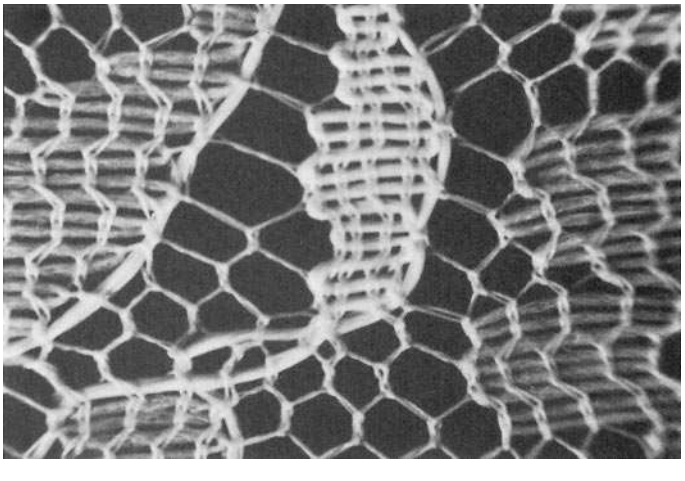

Fig. 28.7 36-gauge (E 18) raschel tulle lace (technical face).

Skechers EX1050
Skechers v Nike

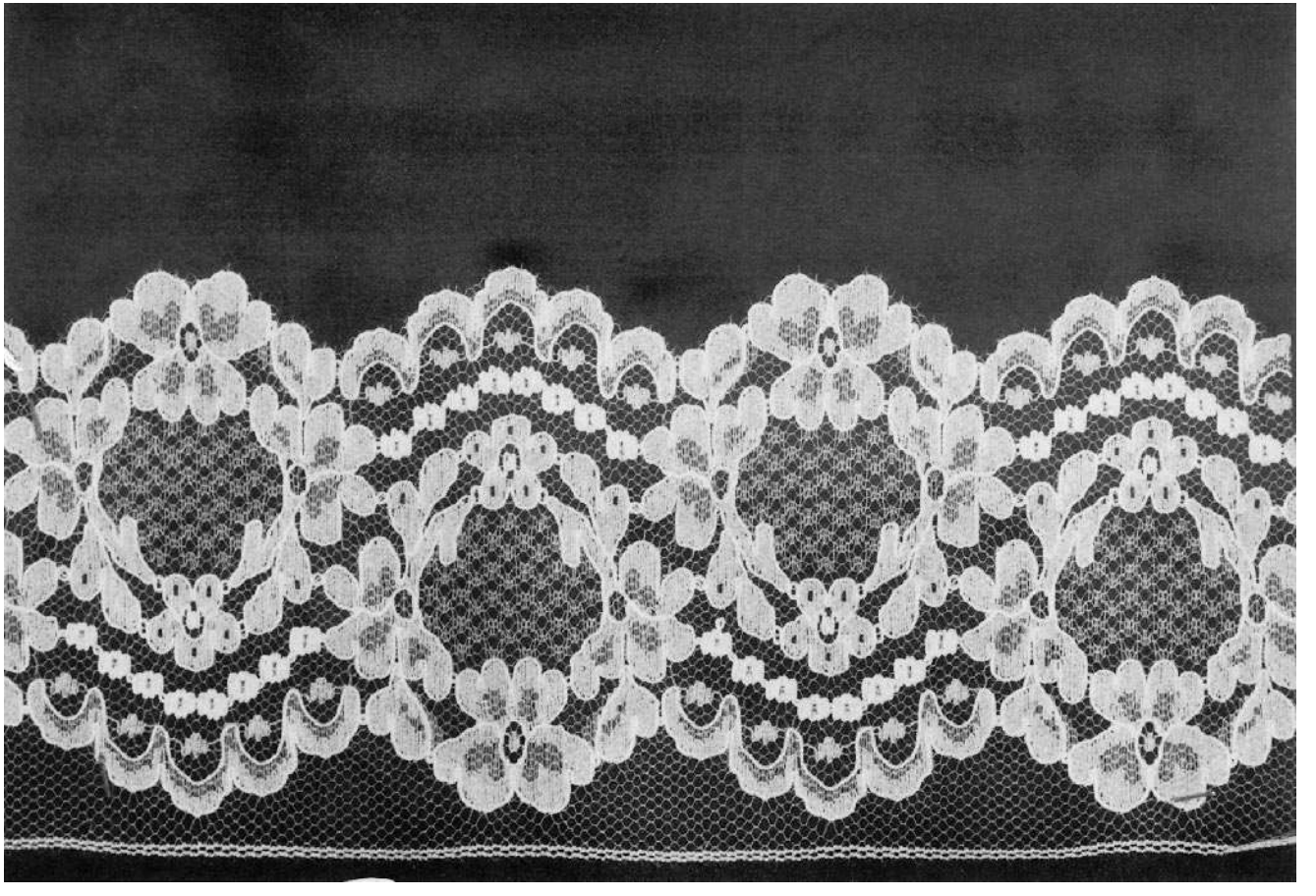

Fig. 28.8 48-gauge (E 24) fine gauge raschel lace; the edge has been scalloped by cutting [Karl Mayer].

Skechers EX1050
Skechers v Nike

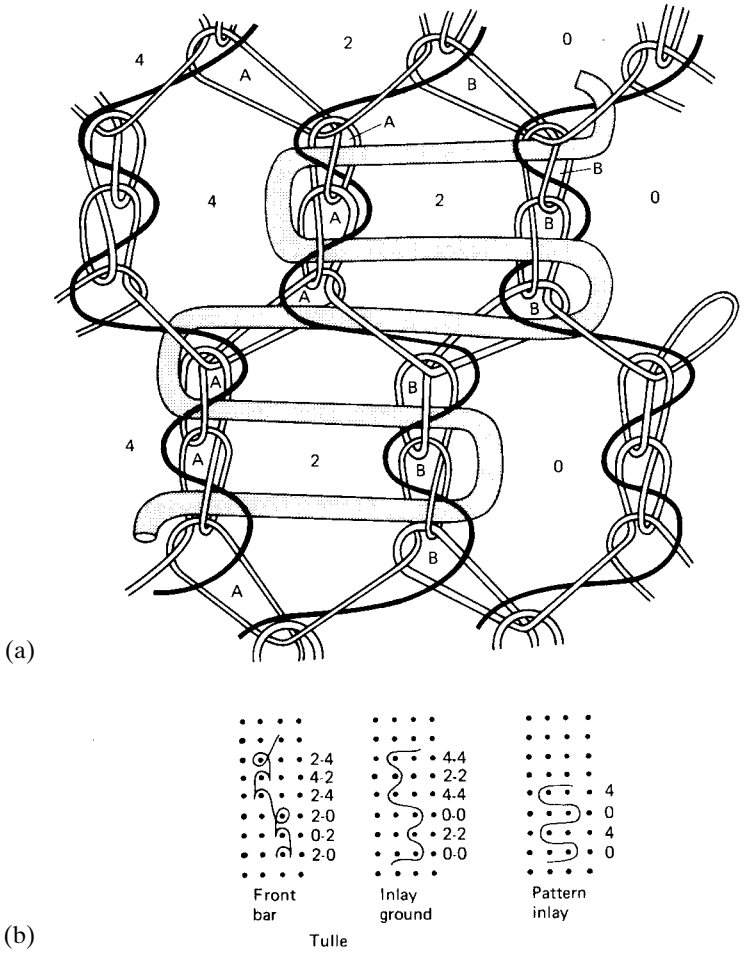

Fig. 28.9 Raschel lace five course tulle with inlay; (a) structure; (b) notation.

wales. *Five-course tulle* produces larger mesh and is more suitable for 28-gauge fabrics.

Hexagonal pattern paper is more useful than point paper when plotting inlay designs for lace. The staggered vertical column of hexagonals that represent the 0 height link position is then established. Each hexagonal in a horizontal row moving away from the 0 link position will represent an increase of chain link height (in even numbers) (Fig. 28.9, A).

Sometimes, more elaborate grounds are produced by varying the inlay movements of partly-threaded bars or a jacquard-controlled guide bar whilst employing a fully-threaded guide bar to make a ground pillar stitch.

28.9 Marquisette and voile

Marquisette and *voile* curtain nets, which are both named after woven constructions, are produced with fully-threaded guide bars the front of which makes a pillar stitch

Skechers EX1050
Skechers v Nike

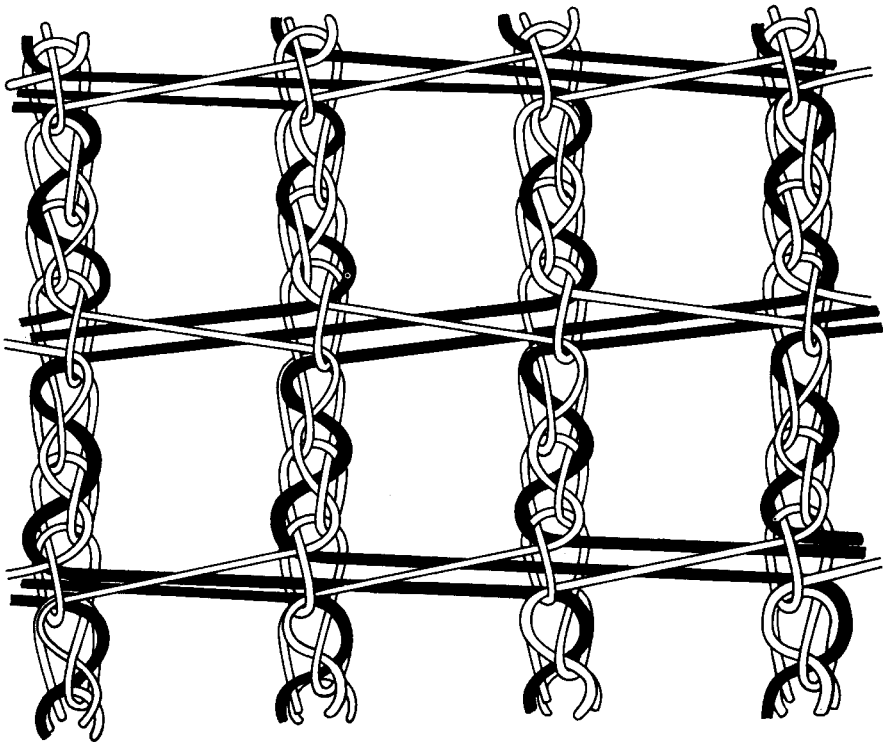

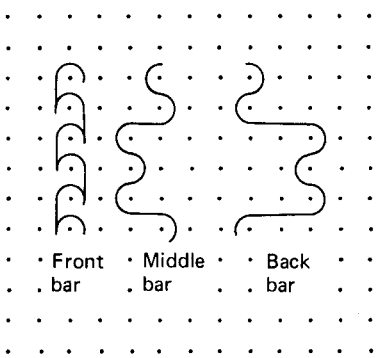

Fig. 28.10 Three bar marquisette.

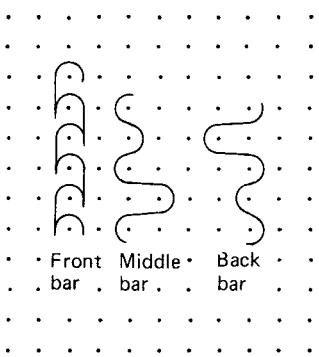

Fig. 28.11 Three bar voile.

(Figures 28.10 and 28.11). Heavier, stronger, but more expensive meshes are made when two inlay bars lap to different extents in opposition to each other (Fig. 28.10). Marquisette has a square mesh (Fig. 28.10) whereas voile (Fig. 28.11) tends to show diagonal inlays.

28.10 Elasticised fabrics

Elasticised fabrics have long been used for corsetry, foundation garments, and swimwear, but the introduction of fine-diameter elastane yarns whose elastic exten-

Skechers EX1050
Skechers v Nike

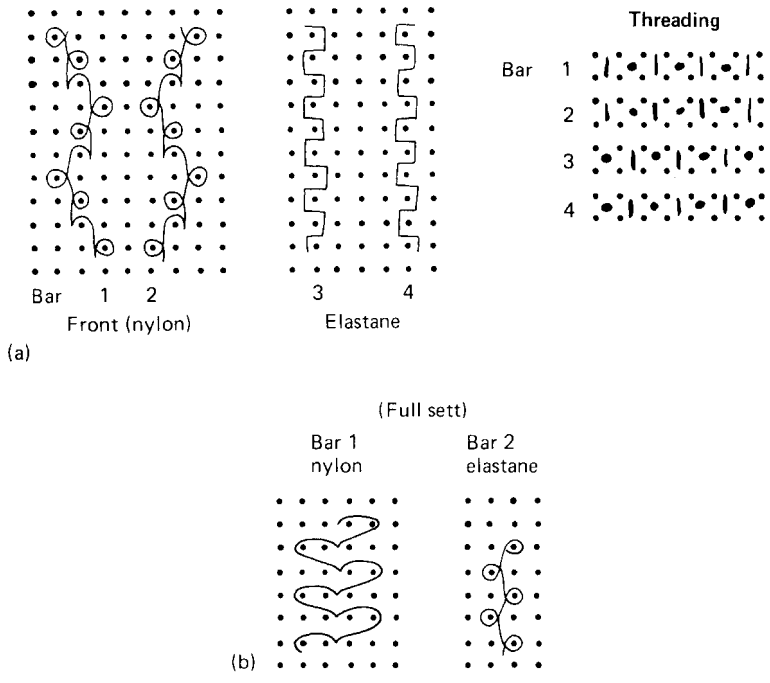

Fig. 28.12 Elastane fabrics.

sibility and recovery can be 'engineered' to particular requirements has extended the use of these structures into lingerie and active sports and leisure wear. Elasticised fabrics are knitted on high-speed raschel and tricot machines as well as in patterned form on multi guide bar lace machines.

The main prerequisites of these machines is delivery of the elastane yarn under conditions of controlled tension, robust knitting elements that will not deflect under the tension of the elastic yarn, and controlled tension for the fabric take-up.

Power net (Fig. 28.12a) is the most widely-known structure for foundation wear. Four half-sett threaded guide bars are used. The two front bars knit the nylon ground and the two back bars inlay the elastane yarn. Only two fully-sett beams, one of nylon and the other of elastic yarn may be needed to supply the requirements of the guide bars. This structure can provide a length-wise extension of 75–85 per cent and a width-wise extension of 65–75 per cent.

For fine-gauge fabrics, elastane yarns with counts from 22 to 78 dtex may be knitted into '*stretch tricot*' using a locknit construction or special lapping movement (Fig. 28.12b). Compound-needle high-speed raschels are favoured for this type of work.

In patterned multi guide bar elastic lace fabrics, the pattern threads are sandwiched in the centre of the structure with the fully-threaded knitting guide bar placed at the front and the elastane yarn being inlaid by the back bar(s).

Skechers EX1050
Skechers v Nike

28.11 Jacquard raschels

Although first patented by *Samuel Draper* of Nottingham in 1837, the selective control of individual guide lapping in a guide bar by means of an overhead jacquard only developed into a sophisticated technique during the late 1960s.

On *Karl Mayer* machines using mechanical jacquard control, the principle employed was to deflect selected guides in a fully-threaded jacquard bar guide bar by means of selectively lowered dropper pins carried in a separately-shogged displacement pin bar.

Those guides have a greater or lesser extent of lap than the undeflected guides of the same guide bar which lap the distance controlled by the guide bar shogging at that course. The pins are kept in the displacement position or raised out of action by means of a *verdol* jacquard apparatus and harness arranged above the machine.

By this means, the underlaps of individual guides in knitting, inlay or fall-plate jacquard guide bars can be varied in extent. Also, on some machines, an inlay movement may be converted into a selected overlap, thus producing a plated overlap design in colour on the technical face of the fabric.

The type of deflection is dependent upon the relative lapping movements of both bars and the exact moment when the pin contacts the guide, so that the guide is either deflected towards or away from its direction of lapping. Figure 28.13 illustrates how a semi-transparent two-needle inlay (a) can be deflected to the left at odd courses to produce open-work areas of one-needle inlays (b), or at even courses to produce solid areas of three-needle inlays (c).

Usually it is necessary to supply the warp for the jacquard bar from individual packages mounted on a creel. There is normally only one, or occasionally two, jacquard guide bars and the remainder are conventionally controlled guide bars.

The guides of the jacquard bar may have a gauge twice as fine as the needles so that there are two guides between adjacent needles, arranged in two staggered rows (A, Fig. 28.14), each capable of having a different yarn type or count if necessary.

The jacquard bars are arranged not to swing, otherwise the harness strings could become entangled.

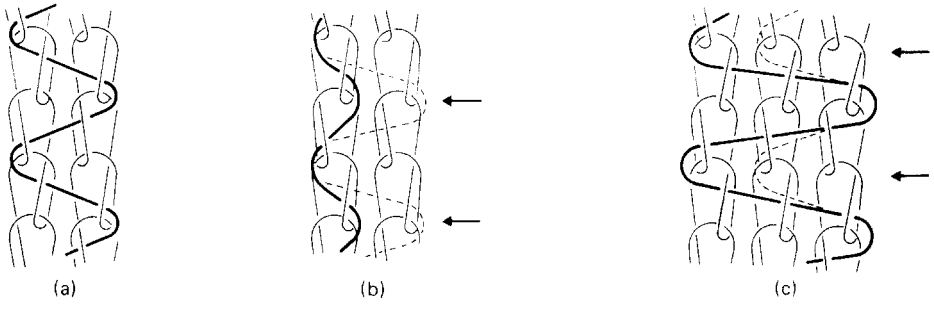

Fig. 28.13 Jacquard inlay deflection units.

Skechers EX1050
Skechers v Nike

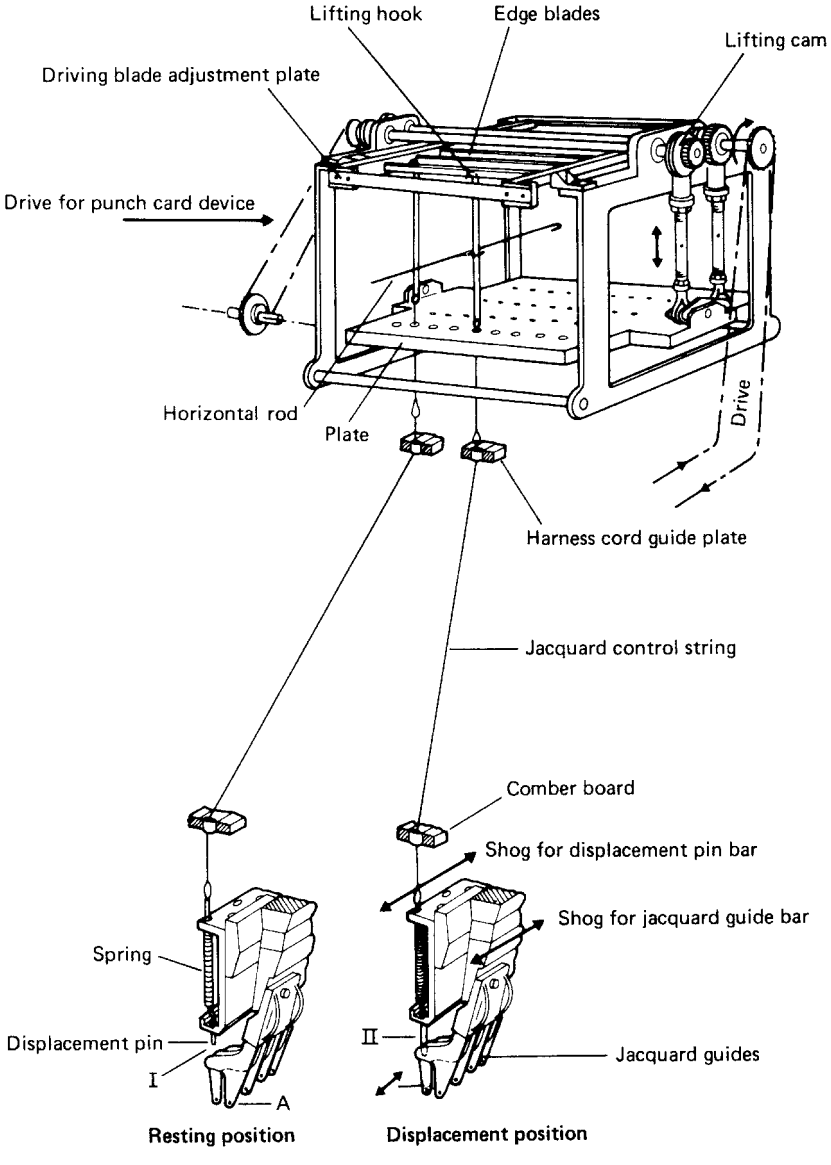

Fig. 28.14 Mechanical jacquard apparatus.

28.12 The Mayer Jacquardtronic multi-bar lace raschels

The traditional mechanical *verdol* jacquard control, previously described, is slow, cumbersome and time-consuming when changing designs. On the latest electronic machines, the jacquard head has been replaced by a computer control that is simply linked by a cable to the combined selection element and jacquard guide, which are one unit. There are no jacquard harness cords for lifting and guide displacement which would restrict the use of the conventional guide bar swinging movement.

At first, *Karl Mayer* used electro-magnets to obtain the jacquard deflection movement; this has now been replaced by piezo technology (Fig. 28.15a and b) [4]. When

Skechers EX1050
Skechers v Nike

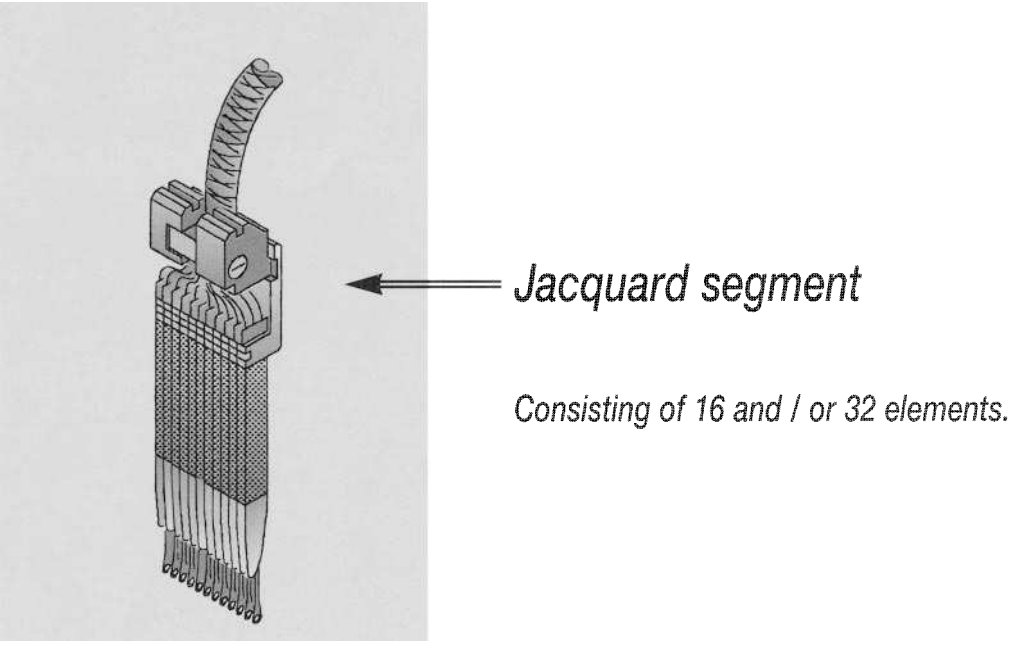

a

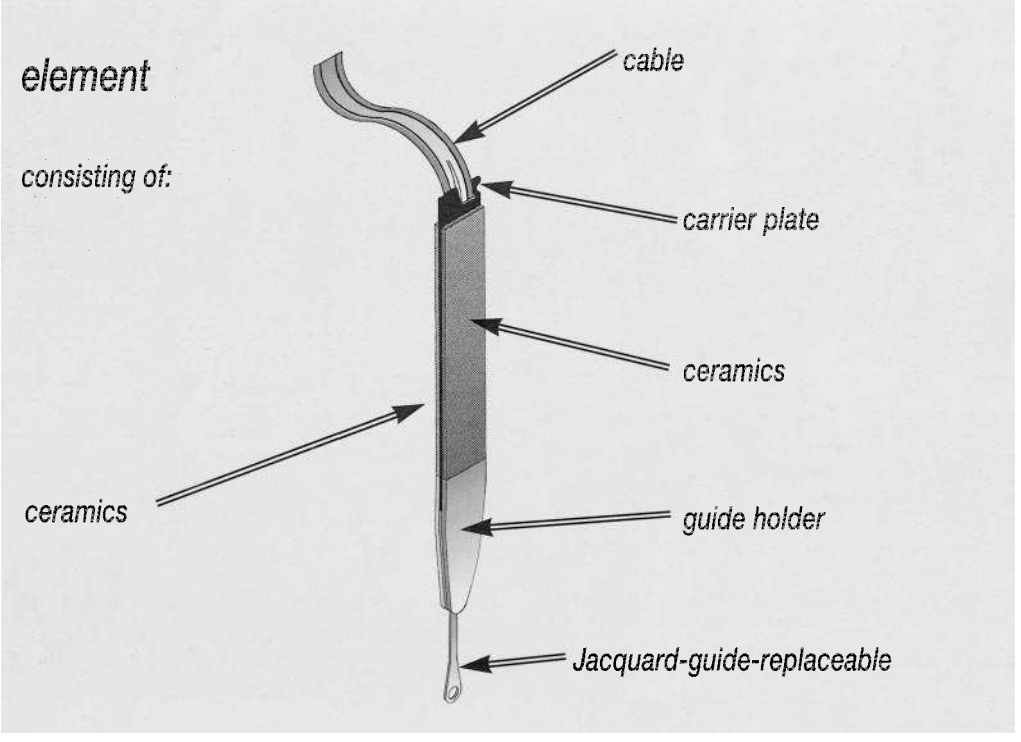

b

Fig. 28.15 a. jacquard segment of 16 or 32 segments [Karl Mayer].
b. Jacquard element [Karl Mayer].

Skechers EX1050
Skechers v Nike

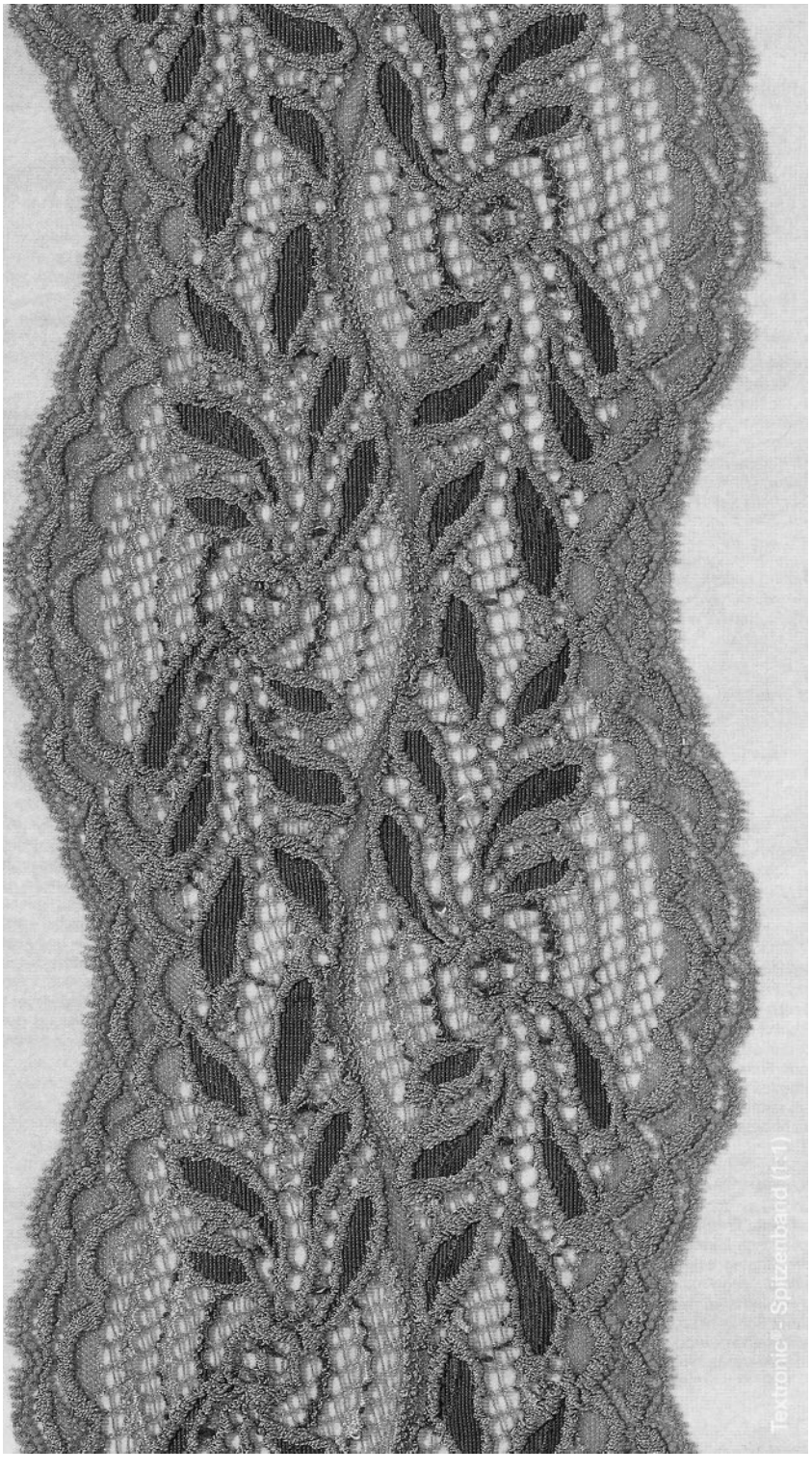

Fig. 28.16 Leaver's lace effect produced on a Textronic raschel lace machine [Karl Mayer Textronic].

Skechers EX1050
Skechers v Nike

an electrical voltage is applied to a piezoelectric material, it expands or contracts as a function of the polarity. The resultant change in length is directly proportional to the applied electrical voltage. Each jacquard guide has a piezoelectric ceramic strip on either side that positively moves the guide one needle space left or right when required. The possibility of being able to transmit two different control signals during one knitting cycle enables selective displacement of both the overlap and the underlap stitches to be achieved.

With this arrangement, knitting speeds can be increased by up to 50 per cent and power consumption is reduced. There is a quicker reaction and a greater range of guide bar shogging possibilities.

Three MRPJ *Jacquardtronic* machines have been developed with 25, 43 and 73 guide bars in gauges E 18 and E 24. The 43-bar machine has a production speed of 420 courses per minute and a pattern repeat area of 168 needles and 14 000 courses.

The jacquard bar can be positioned behind the pattern bars so that three-dimensional patterns can be produced. On the model MRPJ 73/1 [5], the ground bar is in position 1, there are then 70 pattern bars, a split piezoelectric jacquard bar in position 72, and an elastane guide bar in position 73. The guide bars are divided into 18 shogging rows (displacement lines) of which two can form stitches. By positioning the pattern bars in front of the jacquard bar, three-dimensional relief motifs can be produced.

The guide bars are shogged by two computer-controlled digital pattern drives. The ground bar, jacquard bar and even-numbered pattern bars from 4 are controlled from the right side of the machine. Odd numbered pattern bars from 5 are con-

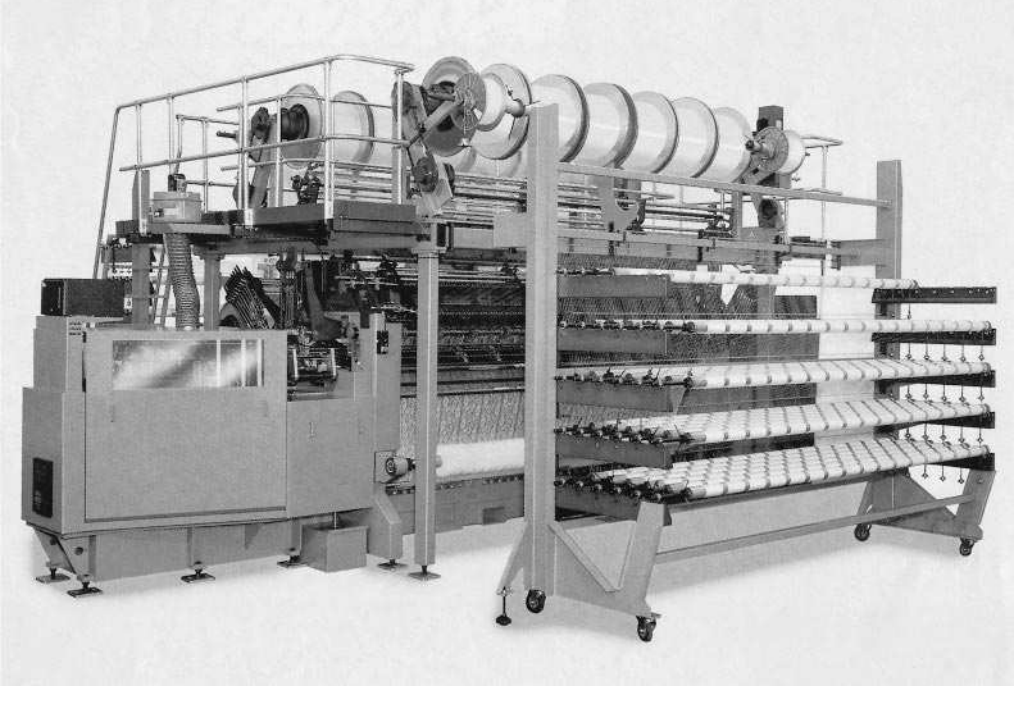

Fig. 28.17 Textronic MRPJ 59/1/24 raschel lace machine [Karl Mayer].

Skechers EX1050
Skechers v Nike

trolled from the left side. The control for guide bars 2 and 3 via the mechanical overlapping mechanism is located on the left side of the machine.

The latest '*Textronic*' fall-plate multi guide bar raschel lace machines use new technology to produce '*Leaver's lace*' quality fabrics. Shadow and filler yarns can be used as well as thick contour yarns (gimps or liners) (Fig. 28.16).

One of the models, MRPJ 59/1/24 (Fig. 28.17), has 59 guide bars arranged in 14 shogging lines. Twenty-four pattern bars are in 4 shogging lines in front of the fall-plate and are thus controlled by it. There are then two pattern guide bars with mechanical overlaps, a stitch-forming ground guide bar, one piezo jacquard bar for inlay, 30 pattern inlay guide bars in 5 shogging lines and one elastane yarn guide bar.

Karl Mayer have an individual yarn selection device that removes yarns when they are not required so that there are no floats carried in the ground between one motif and the next. As soon as the yarns are needed again for patterning, they are reintroduced after having been cut and trapped.

References

1. ANON., Pattern drives, *Kettenwirk-Praxis*, (Eng. Edn), (1976), 2, 15–18.
2. DARLINGTON, K. D., Multi-bar tricot, *Knit. Times*, (1974), 18 Nov., 45–50.
3. ANON., Pattern control without chain links using the new digital mechanism, *Kettenwirk-Praxis*, (Eng. Edn), (1980), 1, 4–5; (1981), 4, 1–4.
4. ANON., Piezo Jacquard technology, *Kettenwirk-Praxis* 4/98, E 5–6.
5. ANON., MRPJ 73/1 Jacquardtronic, *Kettenwirk-Praxis,* 3/97, E 3–4.

Further information

ANON., The jacquard technique has unlimited potential, *Kettenwirk-Praxis*, (Eng. Edn), (1980), 31, 6–8.
EARNSHAW, P., *Lace machines and machine laces*, Vol. 1 and 2, (1994–5), Gorse Publications, Guilford, UK, ISBN 0 952411330X.
MASON, S. A., *Nottingham Lace 1760's–1950's*, (1994), Alan Sutton Publishing, Stroud, Glos., UK, ISBN 0 9524500 0 3
REISFELD, A., *Knit. O'wr Times*, (1968), 21 July, 75–82; (1970), 20 July, 40–45; (1971), 1 Feb., 63–69.
REISFELD, A., Warp knitted fabrics and products, *Knit. Times*, (1970), Part 14, 15 Sept., 50–9; Part 15, 12 Oct., 48–51.
WHEATLEY, B., *Raschel lace production*, (1972), Nat. Knitted Outerwear Assn, New York, USA.
WHEATLEY, B., Raschel drapery and curtain fabrics, *Knit. Times*, (1973), 2 July, 31–9.
WHEATLEY, B., Warp knitting in the eighties (IFKT paper), *Knit. Int.*, (1980), Dec., 55–8.
WHEATLEY, B., Computer control and speed in warp knitting, ITMA 87, *Knit. Int.*, (Dec. 1987), 67–71.

Skechers EX1050
Skechers v Nike

29

Double needle bar warp knitting machines

29.1 Operating principles

Double needle bar raschels and bearded needle *simplex machines* are symmetrically arranged, with each needle bar usually having identical facilities and knitting once during the 360-degree revolution of the machine's cam-shaft. The vertical needle bars work back-to-back in line with the fabric being drawn downwards in the gap between them.

Guide bars are thus able to pass between needles in both beds as they swing from the front to the back of the machine and *vice-versa*. The guide bar lapping sequence involves overlapping and underlapping on each bar in turn so it is not possible to achieve the same actions simultaneously on both bars and the production rate is thus approximately halved.

Also, compared with single needle bar knitting, an extra or *triple swing* of the guide bars is necessary after each underlap in order to swing the guide bars over the needle bar that has completed knitting, so that the other needle bar can rise to commence its knitting cycle.

Double needle bar production is thus very much slower than single needle bar warp knitting, and basic double-faced fabrics knitted with two fully-threaded guide bars are heavier and more expensive than equivalent weft knitted double-bar fabrics. To compete, it is therefore necessary for warp knitted double needle bar products to exhibit unique properties.

Twice as many chain links will be required per complete cycle as compared with a single needle bar machine, with the first half of the links of each complete cycle being used for lapping on the front needle bar. When drawing a lapping notation, it is useful to indicate that every alternate horizontal row of points represents the front bed, either by lettering or by a heavier line of points or both. It may also be useful to space the rows in pairs, thus indicating each complete cycle on the two beds.

Skechers EX1050
Skechers v Nike

29.2 Double needle bar basic lapping principles

Using only one fully-threaded guide bar, overlapping on one bed only will produce a single-faced structure. Overlapping on both beds will produce a double-faced structure but this will only be cohesive if each guide overlaps at least two different needles in one of the beds during the repeat. To understand the appearance and properties of two-bar structures, it is necessary to consider the lapping movements that occur on each needle bed in isolation, as if produced by two separate guide bars.

Figure 29.1a illustrates a lapping movement which is unsatisfactory because the warp threads cannot hold the double-faced wales of loops together. Although the raschel lapping movement is 2-0,4-6/ the overlapping on the front bed is always 4-6, which is equivalent to a closed lap chain on each bed. Thus the wales cannot be held together in either bed.

Figure 29.1b illustrates the simplest lapping movement that can produce a cohesive structure. In this case the lapping movement is 2-4,4-6/4-2,2-0. On the front bed, upright loops are produced because an open lap pillar stitch notation 2-4/4-2 is lapped, whereas on the back bed the lapping movement is 4-6/2-0, which causes alternate courses to be inclined in opposite directions, but ensures that the wales are held cohesively together (Fig. 29.2).

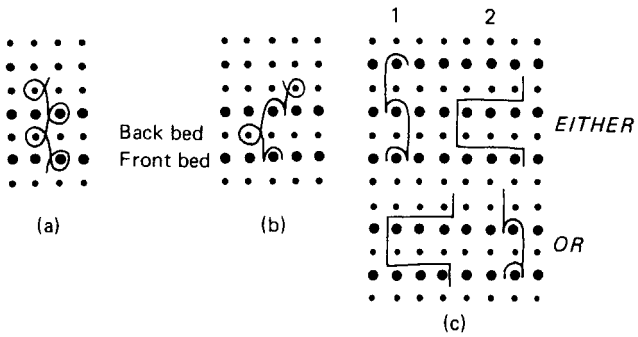

Fig. 29.1 Double needle bar lapping notations.

29.3 Using two fully-threaded guide bars

If the front guide bar overlaps only the front needle bed and miss-laps on the back bed, and the back bar overlaps only the back bed and miss-laps on the front bed, two separate single-faced fabrics will be knitted back-to-back.

If the back bar overlaps only the front bed and the front bar overlaps only the back bed, the two separately knitted fabrics will be connected together by the crossing over of their underlaps.

A fabric of double-faced loops, each composed of a warp thread from each guide bar, is produced if both guide bars overlap both beds.

To understand inlay principles on two beds, it is best to consider each bed as a separate machine with its front (fabric draw-off) on the side remote from the hooks. With inlay, the guide bar nearest to the front overlaps and holds in place the inlay

Skechers EX1050
Skechers v Nike

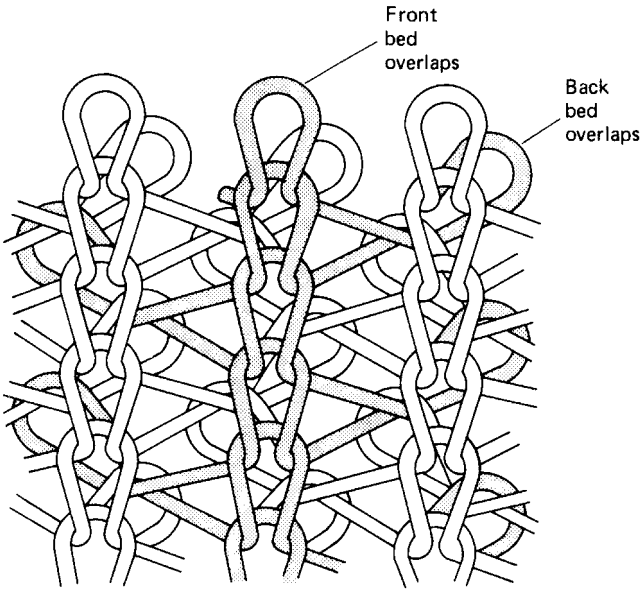

Fig. 29.2 Loop diagram of double faced double needle bar fabric.

produced by the back guide bar. Thus, for the front bed, the back guide bar can overlap to hold the inlay of the front bar, whilst on the back bed, the front bar can overlap to hold the inlay of the back bar, but not *vice-versa* (Fig. 29.1c).

A double-faced net structure can be produced with two partly-threaded guide bars making a carefully arranged lapping movement so that every needle in both beds receives at least one overlapped thread at every knitting cycle.

29.4 The simplex machine

The *simplex* machine knits fine-gauge, high-quality, specialist double-faced fabrics at rather low rates of production. It was originally designed to knit simplex fabric in order to replace duplex glove fabric, which was composed of two single-faced fabrics stuck together back-to-back. It has two guide bars, which overlap and underlap each needle bar to knit plain types of fabric and simple mesh designs on standard lapping movements, usually controlled from pattern wheels. The gauge range is approximately E 28 to E 34, with E 32 being a popular gauge. Cotton glove fabric is still knitted in typical counts of NeB 80/1 to 90/1 but yarns as fine and as expensive as NeB 120/1 have been knitted.

Atlas lapping on a 48-cycle repeat is normally employed to hide count irregularities in the structure and improve the elastic recovery. To obtain the 65–75 per cent width-wise stretch required for glove fabric, the fabric is treated with a 30 per cent caustic soda solution during finishing. This causes an approximate 50 per cent width shrinkage, and it is followed by a mild raising process with emery-covered rollers in order to achieve a suede appearance. Stable print-base fabrics for dress wear are produced with simple repeat movements using 40-denier nylon. A cheaper, lighter-weight fabric may be produced from heavier yarns by causing each guide bar

Skechers EX1050
Skechers v Nike

to knit only on one bed and inlay on the other, so that they hold each other together in the double-faced fabric.

Unlike in the tricot machine, the sinkers are not leaded at the front so they can be completely withdrawn from the needles. In order to bring the needle bars closer together, they have no profiled sinker belly and on the newer machines, no throat. The beds converge at an angle of less than 45 degrees. Landing is achieved by taking the needle bar downwards whilst still in contact with the presser which, in order to simplify machine movements, may be mounted on top of the sinker bar and move with it. On simple designs knitting high quality yarn, speeds of 300 courses per minute are possible on each needle bar.

Figure 29.3 shows the knitting action on the front needle bar; an identical sequence occurs afterwards on the back needle bar to complete the machine cycle.

(a) *First rise of the needle bar.* The knitting action has been completed on the back needle bar for the previous machine cycle. The front sinker/presser bar has withdrawn, leaving the back sinker bar to support the fabric. The guide bars have completed their third swinging movement so that they are now swinging towards the back of the machine, allowing the front needle bar to rise with the back needle bar still near to knock-over and thus helping to hold down the fabric. The front needle bar rises sufficiently to enable the old overlaps under the beards to slide down onto the needle stems.

(b) *Return swing, second rise then lowering and pressing.* As the guides swing to the back of the machine, the warp ends are wrapped over the needle beards. The front needle bar is now lifted to a higher position so that the new overlaps slip from the beards to a high position on the needle stems. As the front needle bar is lowered to cover the new overlaps, the front sinker presser bar moves to contact and press the beards so that the old overlaps slide onto the closed beards which descend through them.

(c) *Completion of landing and knock-over, underlap and third guide bar swing.* Whilst the needles descend further to knock-over the old overlaps, the guide bars make their underlap shog behind the front needle bar and then commence their swing towards the front of the machine to allow the back needle bar to rise for the second part of the machine sequence.

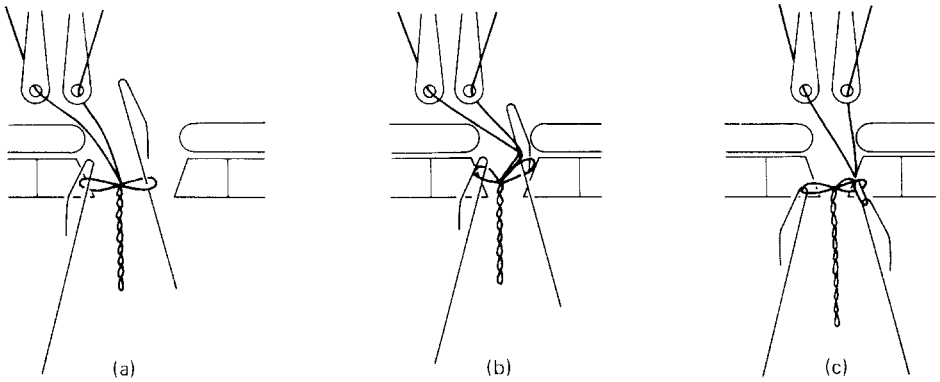

Fig. 29.3 Knitting action of bearded needle simplex machine.

Skechers EX1050
Skechers v Nike

Simplex fabric is in demand as a result of its smooth surface, soft handle, elegant drape and extensibility, all of which make it suitable for moulded brassiere cups. To meet this demand with up-to-date technology, *Karl Mayer* have produced a double needle bar raschel with two latch needle bars and four guide bars that can knit the fabric at a maximum rate of 500 courses per minute on each needle bar in E 32 gauge and a width of 4318 mm (170 inches). Maximum stitch density is 32 stitches/cm. The machine can also knit ultra-fine spacer fabrics [1–3].

29.5 The double needle bar raschel

The double needle bar raschel, as designed by *Redgate*, later developed into a general-purpose machine, mainly knitting shawls and scarves. At first, the needle bars were arranged back-to-back alternately, as on rib weft knitting machines, but they were soon placed exactly behind each other for convenience of guide bar swinging. Between six and eight guide bars were employed, together with various attachments such as a fall-plate, a crepeing motion (which could disengage one needle bar for a pre-selected number of courses), a switching device for moving the guide bar push-rod from one track of the pattern chain to another, and simple weft inlay or insertion. The front needle bar could be replaced with a point bar for making plush and pile structures or removed altogether so that the back needle bar could knit single-faced fabrics driven by a new set of cams, which doubled its knitting speed.

Improvements in weft knitting and single-bed warp knitting machinery left the double needle bed raschel isolated as a slow, coarse-gauge and very cumbersome type of machine until comparatively recently. However, the arrangement of the elements and knitting action of the raschel is less complex than that of the simplex machine, thus offering greater possibilities for adaptation and modification in order to knit special structures at economical speeds, so it is in this direction that developments have occurred.

29.5.1 The conventional knitting action

On the conventional double needle bar machine, each needle bar in turn is active only for half of the 360 degrees of the knitting cycle. Holding-down sinkers are therefore unnecessary as the other needle bar is in the low inactive position and will restrain the fabric loops.

Figure 29.4 shows the knitting action on the front needle bar; a similar action occurs on the back needle bar (for simplicity, only one guide bar is illustrated).

(*a*) *The front needle bar rise.* The front needle bar is raised to clear the previous course of overlaps from the latches whilst the back needle bar holds the fabric loops.

(*b*) *The overlap.* The guide bar swings through between the needles to the front of the machine. It is shogged for the overlap and then swings back.

(*c*) *The knock-over and underlap*. As the needle bar descends to knock-over, the guide bar performs the underlap shog.

(*d*) *The third swing of the guide bar.* The guide bar now swings over the front needle bar in order to allow the back needle bar to rise and begin its knitting cycle.

Skechers EX1050
Skechers v Nike

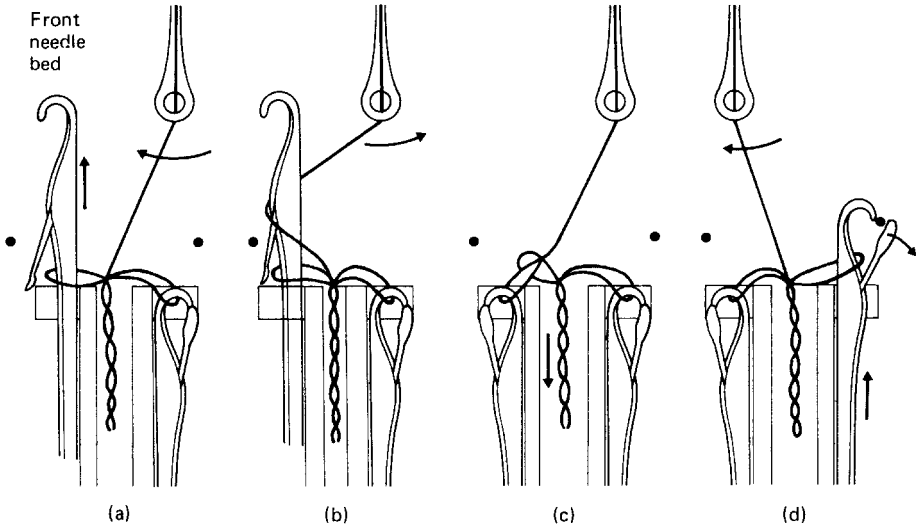

Fig. 29.4 Knitting action of a double needle bar raschel.

In order to increase knitting speeds on modern machines, the 180-degree dwell period of each needle bar has either been reduced or eliminated. In the latter case, one needle bar is rising as the other is falling so that the two needle bars are almost continuously moving in opposition, thus effectively doubling the knitting speed. Some machines also have a counter needle bar motion so that the needle bars and trick-plates move towards the guide bars and thus reduce the guide bar swing. As the needle bar in these cases has only a short dwell period and sometimes separate fabric sections are being knitted on each needle bar, holding-down sinkers are necessary.

29.5.2 Double needle bar raschel products

In the past, double needle bar raschels of 24-gauge and coarser were used to knit fancy fabrics in woollen yarn for baby-wear, nightwear and knitwear. Two such structures were *rib* and *crepe*. In the former, certain needles were never overlapped, whereas the latter is actually a knop fabric produced by taking the back needle bar out of action for between two and four courses to hold its loops whilst the front bar continues to knit. Fabrics of this type have faced increasing competition from the improved design possibilities now offered by flat weft knitting machines.

Two other structures that occasionally achieve a limited success in underwear or outerwear are *waffle* fabric and *Brynje* string vest, both of which were originally developed in the early 1950s as thermal underwear fabrics for US forces serving in cold climates. Both are produced with two half-threaded guide bars although two other guide bars are often also used to produce the selvedge edges for making up. In 24 gauge, 22/1 NeB combed cotton would be a suitable yarn count.

String vest is a double-faced net structure with the underlaps hidden inside. Because it is a double needle bed fabric, the net openings are only half as large as the lapping movement representation.

Waffle fabric is a solid fabric composed of a series of open pockets alternately

Skechers EX1050
Skechers v Nike

placed on both sides of the fabric. Each guide bar makes overlaps over two needles, which draws their two adjacent wales together thus leaving a gap between every two wales. Gaps on one side are opposite the two connected wales on the other. This arrangement would give the fabric the appearance of a 2×2 rib but after five courses, the lapping movement is changed causing the gaps and connected wales to change positions.

29.5.3 Length-sequenced articles

Some raschel double needle bed products are in the form of articles, a number of which can be simultaneously knitted side-by-side across the needle bed. These articles have a length repeat composed of sections of fabric where the lapping cycle of one or more of the guide bars has been altered. The sequence involves a pattern-change device for counting the number of repeat lapping cycles in each section and for initiating a changeover of guide bar push-rod control from scanning links in one chain track on to those in another track, in order to alter the lapping repeat for a particular guide bar. By this method, a guide bar may be controlled from a choice of two or more chain tracks, each having a short, simple repeat of chain links that may be used any number of times, instead of being controlled from one track of an excessively long and expensive chain containing links for every repeat cycle throughout the length of article.

The principle of '*pattern changing*' is used in the production of a scarf with knitted-in fringes on each end. Lapping for the scarf section is taken from one set of chain tracks and lapping for the fringe section from another. Each guide bar shogging lever may be controlled from either of two pattern chain drums; the upper drum chain tracks may produce the simple lapping repeat for the scarf section whilst the lapping for the fringe section is achieved by switching the shogging control to the chain tracks of the lower drum.

The scarf fabric is knitted as a continuous strip of double-faced fabric with the fringe sections composed of two-wale wide strips, each unconnected by underlaps to its neighbour. Each scarf piece is separated from the next by cutting through the centre of the fringe section and seaming the cut ends to secure them. The simple tricot lapping movement produces the width-wise elasticity required for scarves.

29.5.4 Tubular articles

A seamless tube of fabric may be knitted on a rectilinear double needle bed raschel in a similar manner to on a V-bed flat weft knitting machine. Each bed knits separate single-faced fabrics that are joined together only by underlaps of other partly-threaded guide bars between the beds at the two opposing selvedge needles at each edge. The underlaps may be arranged to be the same as for the needle beds, thus producing a seamless join to the fabric tube.

Figure 29.5 illustrates the basic principles using a base structure of single tricot lapping and four guide bars. The front bar laps only the front bed, the back bar laps only the back bed, and the two middle bars are threaded with only one thread to each complete one selvedge join.

In the first underlap movement towards the *right*, the warp threads will rotate anticlockwise by one needle space in producing the tube on the machine beds. Underlapping on the front bed will be towards the *right*. The right-hand selvedge

Skechers EX1050
Skechers v Nike

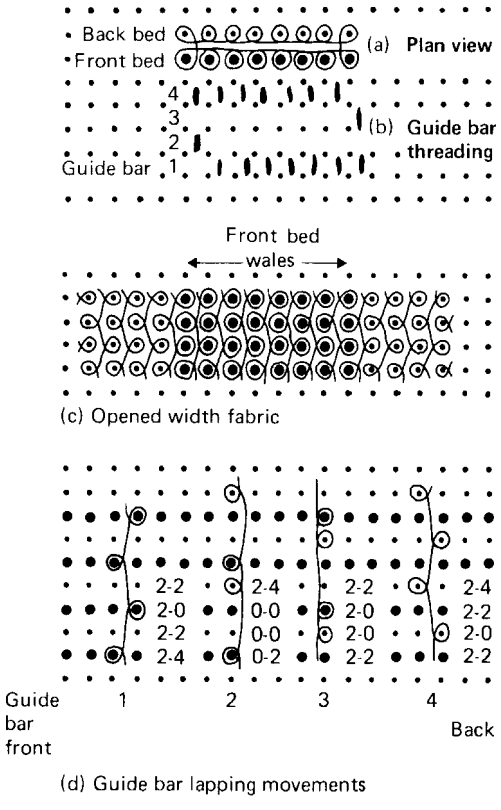

Fig. 29.5 Lapping diagram and notation of a seamless tube knitted on a double needle bar raschel.

bar will underlap across from the front to the back bed. The back bar will underlap towards the *left* and the left-hand selvedge bar will underlap across from the back to the front bed. In the next underlap movement, the direction of lapping will be reversed for each of the guide bars, by a clockwise movement.

As one selvedge bar is always overlapping one needle in each bed, the threading of the front and back bars must be one less than the number of needles knitting the fabric in that bed. Two selvedge guide bars are required because when one is overlapping the front bed in a particular cycle, the other is overlapping the back bed.

Whilst knitting the tube, no guide bar must overlap on both the front and back beds during the same cycle, otherwise a single-thickness double-faced stitch is produced. If the base movement is a two-needle underlap, two selvedge threads will cross over the beds at each selvedge and each will require a separate guide bar. If the base movement was full tricot, a minimum of eight guide bars would be required, two for each bed and two for each selvedge. Inlay net or part-sett threaded net lapping movements may be used to produce tubes in a similar manner.

Some of the first tubular fabrics produced were for *vests* or for *fishnet stockings*, knitting eight to twelve tubes side by side. In 1967, the American *Kidde Cocker*

Skechers EX1050
Skechers v Nike

company introduced the *Fashion Master* machine for knitting panty-hose and body stockings. By changing the lapping movement of an extra four bars that are lapping in the centre of the fabric, the large tube for the body portion can be divided into two smaller tubes with two of the bars joining two opposing needles across the needle beds for the inner selvedge of one leg, and the other two joining the adjacent needles for the other leg, thus knitting a bifurcated article. Graduating stiffening is achieved by infinitely-variable control of the fabric take-down and warp let-off, a shifting control moves the guide bar push-rods onto other chain tracks when required, and reinforcement is achieved by double-needle overlapping. For approximately two years, hosiery produced on these machines was highly popular.

The *Karl Mayer* HDR 16 EEW machine was introduced in 1970 for producing a range of simple garments such as seamless panties, brassieres and pocketings. The technique used, which has undergone continuous development, is to form the tube across the knitting width rather than down the wales. Although this causes the article in use to have its courses in a vertical direction, this is no major disadvantage and the possibilities for achieving simple shaping are considerably improved.

Figure 29.6 illustrates the production of a strip of briefs fabric; it is only necessary to cut through the centre of the connecting joins to separate each article from the next. These joins of short length are, in effect, knitted side seams, so the briefs are turned inside out after knitting to hide this seam. The first side seam is produced by guides lapping across between the two beds to form a solid double-faced fabric section. Guide bars inlaying on the left selvedge form the knitted-in waist band which is produced on each bed because the guide bars lap on the two needle beds separately in order to produce the waist opening on the left and the first leg opening on the right. Half-way through the courses for the sequence, the right selvedge needles are joined together for a number of courses to complete the first leg opening and close the crotch section of the brief. Single-bed fabric knitting then continues for the second leg after which the bars knit between the beds to form the second side seam and then commence the sequence for the next brief.

On a 75-inch (190 cm) wide machine, three brief fabric strips can be knitted side by side giving a production of 360 briefs per hour. It is possible to achieve a cotton terry effect on the inside if desired. Upper and lower pattern chain drums are employed to control the guide bar shogging levers and these drums may have a split drive and chain stop facilities to further economise on links and provide greater versatility in lapping movements. The double needle bar raschel in 12–16 gauge has proved particularly useful for the production of *packing sacks* for fruit and vegetables made from polyolefin in fibrillated tape or mono-filament form [4,5]. The base structure is usually a pillar stitch inlay that provides a secure non-slip construction (Fig. 29.7). The polyolefin sheets may, if necessary, be fed directly into the back of the machine where they are split into separate ends without the need for warping.

The sacks are knitted sideways at a rate of 250 courses per minute on each bed in a similar manner to the briefs. Their depth can thus be varied according to the number of needles knitting in each section. The two fabrics are joined together at the top and bottom to form the side seams and at one selvedge to form the bottom of the sack. At the open end, a draw-thread may be knitted into each side of the fabric and separation of the sacks from the continuous warp knitted strip is achieved afterwards with a hot wire.

Skechers EX1050
Skechers v Nike

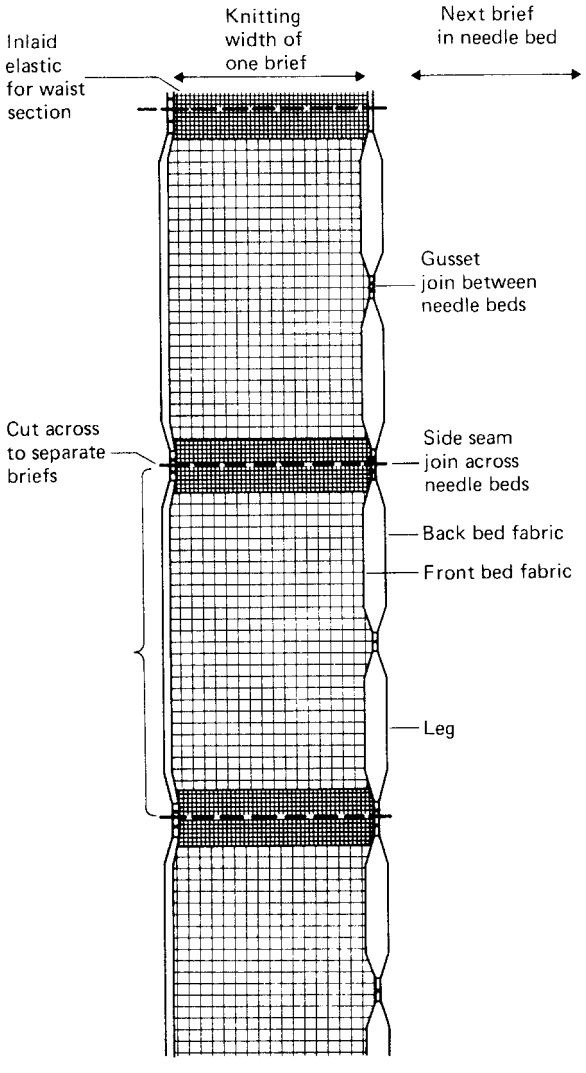

Fig. 29.6 The principle of knitting tights on a double needle bar raschel.

29.5.5 Pile fabrics

There are two main groups of pile fabrics produced on double-bar raschels: cut pile and point pile. *Cut pile* is achieved by knitting a separate base fabric on each needle bed but joining the two together by the lapping movement of the pile, which is later slit to produce the two cut pile fabrics. *Point* or *looped pile* is produced by replacing the front bar needles by a point or pin bar around which the pile yarns are overlapped. For security, the pile yarn may be overlapped in the base fabric on the needle bar or it may be inlaid to economise on yarn and produce a lighter-weight fabric.

Cut pile fabrics are employed for a wide range of high pile end-uses such as simulated fur and skin fabrics, upholstery and coat linings. The *Karl Mayer* HDR 5PLM is designed specifically for this type of fabric. Its raschel gauges range from 18 to

Skechers EX1050
Skechers v Nike

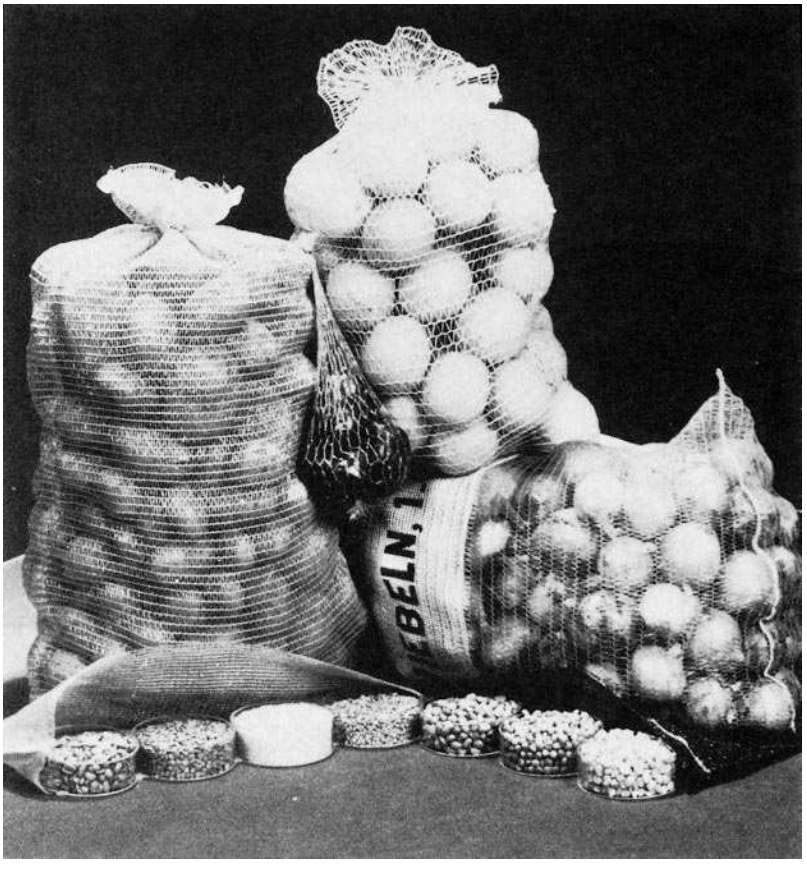

Fig. 29.7 Fruit and vegetable sacks knitted on double needle bar raschel machines [Karl Mayer].

36, with 32 being most common, in widths of 75–180 inches (190–457 cm) and speeds of approximately 250–300 cpm per needle bar (five-times faster than weaving). The fabric made from polyester yarns weighs between 300 and 600 g/m^2 and is particularly used for automotive upholstery.

Each bed knits alternately and has a cam-shaft, needle bar, trick-plate, sinker bar and two guide bars with no swinging action. The needle bar and trick-plate swing through the two guide bars to produce the base structure on that particular needle bed. The middle (pile) guide bar has normal swinging facilities for lapping the pile alternately on each needle bed. As the pile is severed in the centre, its height is half the distance between the two trick-plates; this distance may be altered to give a range of pile heights between 2.5 and 30 mm.

Figure 29.8 shows a simple three guide bar construction and Fig. 29.9, a more popular construction using five guide bars. By lapping the pile yarn into two wales, any irregularity in the yarn is disguised.

The effect produced is determined by a combination of type of fibre, denier, lapping movement and finishing process sequences whose operations may include one or more of the following: raising, cropping, setting, dyeing or printing, and electro-polishing.

Skechers EX1050
Skechers v Nike

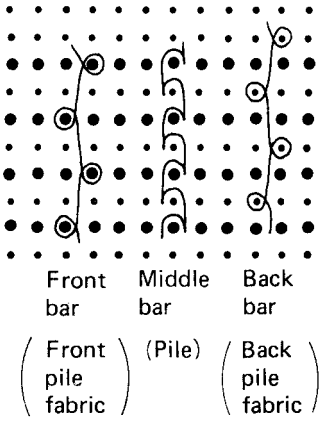

Fig. 29.8 Notation for a three guide bar cut plush.

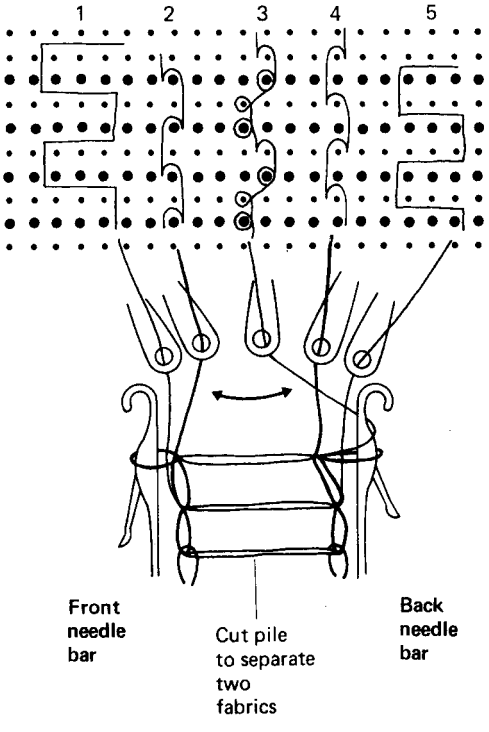

Fig. 29.9 Notation for a five guide bar cut plush.

In point pile, the loops lie at right angles to the base fabric and on some machines the points are sharpened or contain rotating cutting blades for cutting the pile loops. The structures are particularly suitable for floor coverings and carpeting. On a five guide bar machine in 12 gauge, the front two bars might knit pillar stitches in opposition, threaded with spun polyester; the inlay might be supplied by 2/10 NeK spun polyester from the back bar; whilst the two middle bars might supply 5/400 denier

Skechers EX1050
Skechers v Nike

textured polyester for the pile, overlapping the points and laying-in on the needle bar.

Using an eight-link-per-course cycle, the overlap for the points occurs between the first two links, the overlap for the pillar stitches on the needle bar occurs between the second two links, whilst the last four links allow the points and needles to descend for knock-over and for the underlap inlay on the back bar.

An unusual use is three guide bar structure for the artificial turf, *Astro-turf* [6], whose pile is composed of four, six or eight ends of 500 denier dope-dyed nylon ribbon on a nylon polyester knitted and inlaid base fabric.

References

1. ANON., Successful Simplex raschel machines, *Kettenwirk-Praxis*, 4/98, E 5,6.
2. ANON., Simplex and ultrafine spacer fabrics, *Kettenwirk-Praxis*, 2/99, E 8,9.
3. HEIDE, M., Spacer fabrics for medical applications, *Kettenwirk-Praxis*, 4/98, E 15–19.
4. WHEATLEY, B., Processing of polyolefin tapes on Raschel knitting machines, *Knit. Times*, (1973), 16 April, 188–95.
5. DARLINGTON, K. D., Uses of polyolefins in Raschel, *Knit. Times*, (1975), 25 Aug., 12–17.
6. GIBBON, J., In the days of green green grass, *Hos. Trade J.*, (1969), Sept., 70–2.

Further information

BOHM, C. Warp knitted fabric structures made on machines having two needle bars, English Issue of *Wirkerei- und Strickerei-Technik* (WST), (1980), 2, (3), 44–51.

KEINBAUM, M., Terry towelling production techniques, construction and patterning range (part V), *Int. Text. Bull.*, (1975), 3, 95–106.

REISFELD, A., Warp knitted fabrics and products, *Knit. Times*, (1971), Part 18, 30 Aug., 50–8; Part 19, 6 Sept., 75–89.

REISFELD, A., Warp knit fabrics and products, *Knit. Times*, Part 24, (1972), 20 Nov., 40–7; Part 25, (1973), 9 April, 43–61.

SPENCER, D., Warp Knitting and Crochet: ITMA '99, *Knit. Int.*, (1999), Sept., 22, 23.

WHEATLEY, B., Production of fur fabrics on Karl Mayer double needle bar Raschel machines, *Knit. Times*, (1972), 16 Oct., 28–37.

WHEATLEY, B., Primer on double needle bar warp knitting, *Knit. Times Yr. Bk.*, (1973), 126–137

WHEATLEY, B., The production of carpets on Karl Mayer Raschel machines, *Text. Inst. and Ind.*, (1974), 12, (3), 72–5.

WHEATLEY, B., Production of carpeting on Raschel knitting machines, *Knit. Times Yr. Bk.*, (1974), 109–116.

Skechers EX1050
Skechers v Nike

30

Technical textiles

A *technical textile* is a textile that has been developed to meet the exacting specified high-performance requirements of a particular end-use other than conventional clothing and furnishings. In many cases, specially developed technical yarns are employed to support and reinforce the fabric properties [1].

30.1 Markets for technical textiles

According to Professor S. Anand of Bolton Institute, England, technical textiles account for approximately 21 per cent of all textiles. The main markets are: traditional industrial fabrics, for example, canvas, tents, etc. (43%); transportation and automotive (23%); leisure (12%); geotextiles (10%); medical textiles (10%); and protective apparel (2%).

Two-thirds of *automotive materials* go into 'interior trim' for seat covers, roof and door liners, and carpets, where woven fabrics still dominate [2]. Other uses include tyres, air bags and filters.

Although non-woven and woven fabrics account for the majority of technical textiles, warp knitted and, to a lesser extent, weft knitted structures have captured some special end-use markets. These are particularly where certain properties such as drapability, mouldability, knitting to shape, open-work, extensibility, strength, lightness of weight and cost are at a premium and can be tailored to requirements.

30.2 The properties of warp knitted structures

Warp knitting offers:

- Higher production rates than for weaving.
- A wide variety of fabric constructions.
- Large working widths.

Skechers EX1050
Skechers v Nike

- A low stress rate on the yarn that facilitates careful handling of fibres such as glass, aramide and carbon (particularly when using weft-insertion techniques).
- Conventional warp knitted structures that can be directionally structured.
- Three-dimensional structures that can be knitted on double needle bar raschels.
- With weft insertion, uni-axial, bi-axial, multi-axial and composite structures that can be manufactured on single needle bar raschels.

30.3 End-uses for technical textiles

Possible specific applications for technical textiles are as follows:

- *Geotextiles* – Drainage, filter, and membrane material, road and tunnel reinforcement, erosion protection.
- *Tarpaulins, coverings* – Air-inflated structures, tarpaulins, roof coverings, temperature-resistant sails, back-lit advertising signs.
- *Safety textiles* – Heat and flame-resistant protective clothing for civil and military purposes, fluorescent safety clothing, inflatable life rafts, bullet-proof vests, helmets, sun protection blinds, radiation protection, parachutes, oil trap mats. (Bullet-proof vest fabric can be knitted on a *Karl Mayer* E 18 raschel machine with a magazine weft insertion and three guide bars. The front bar is threaded with 80 dtex polyester guide bars and laps 1–0/2–3. The other two bars 'interweave' with the front bar using the evasion technique 00/11/00/22 and

Fig. 30.1 EQT full-body competition swimsuit [Adidas].

Skechers EX1050
Skechers v Nike

00/22/00/11 (Chapter 27). These, together with the weft insertion mechanism, are threaded with 840 dtex aramid.

- *Industrial Textiles* – Filter fabrics, conveyor belts, adhesive tapes.
- *Medical Textiles* – Plasters, tapes, gauze, artificial arteries, bandages, dialysis filters, elastic net bandages, blankets and covers. (Small-diameter, single cylinder machines are ideal for weft knitting tubular stretch bandages from cotton yarn with inlaid elastic yarn [3]).
- *Composites* – Composites for buildings, aerospace, automobiles, boats.
- *Active Sportswear* – Clothing and equipment (Fig. 30.1).
- *Nets* – Fabrics for construction, agriculture, for safety, weather and pest protection, blinds, fences, storage nets, sacks, fish nets [4].

30.4 Geotextiles

Geotextiles are polymer fabrics used in the construction of roads, drains, harbour works, and breakwaters, and for land reclamation and many other civil engineering purposes (Fig. 30.2).

The geotextiles market requires bulk quantities of material. Warp-knitted weft-insertion geotextiles offer the following advantages when compared to woven geotextiles:

1. Strength-for-strength, they are lighter than woven geotextiles using the same yarn. This makes for easier handling and laying on site; thus transport and labour costs are less in real terms.
2. Knitted geotextiles have exceptional tear strength. Additional strength can be designed and built-in to the weft direction such that a bi-axial high tensile, high strength warp/weft geotextile becomes a reality; e.g. 500 k Nm warp and 500 k Nm weft.
3. Knitted geotextiles can incorporate an additional fabric to form a true composite geotextile, the fabric being simply knitted-in.
4. The individual yarns in the warp knitted weft-insertion geotextile are straight when incorporated, so they are able to take-up the strain immediately on loading. Those in woven geotextiles are interlaced [5,6].

30.5 Knitted wire

Rhodius GmbH of Bavaria specialise in the knitting of yarns or fibres composed of metal and of speciality material such as glass and aramid [7]. In the car industry, knitted wire components are used as filters in air-bag systems, as vibration dampeners, and for thermal insulation and noise reduction purposes. Knitted wire fabrics prove very efficient particularly in terms of elasticity, corrosion, thermal resistance and long service life.

30.6 The advantages of warp knitted nets

Warp knitted nets have knot-free joints giving greater strength and lower weights; extremely open fabric uses very little yarn; fabric density is adjustable and can be adjusted to the requirements of sunlight.

Skechers EX1050
Skechers v Nike

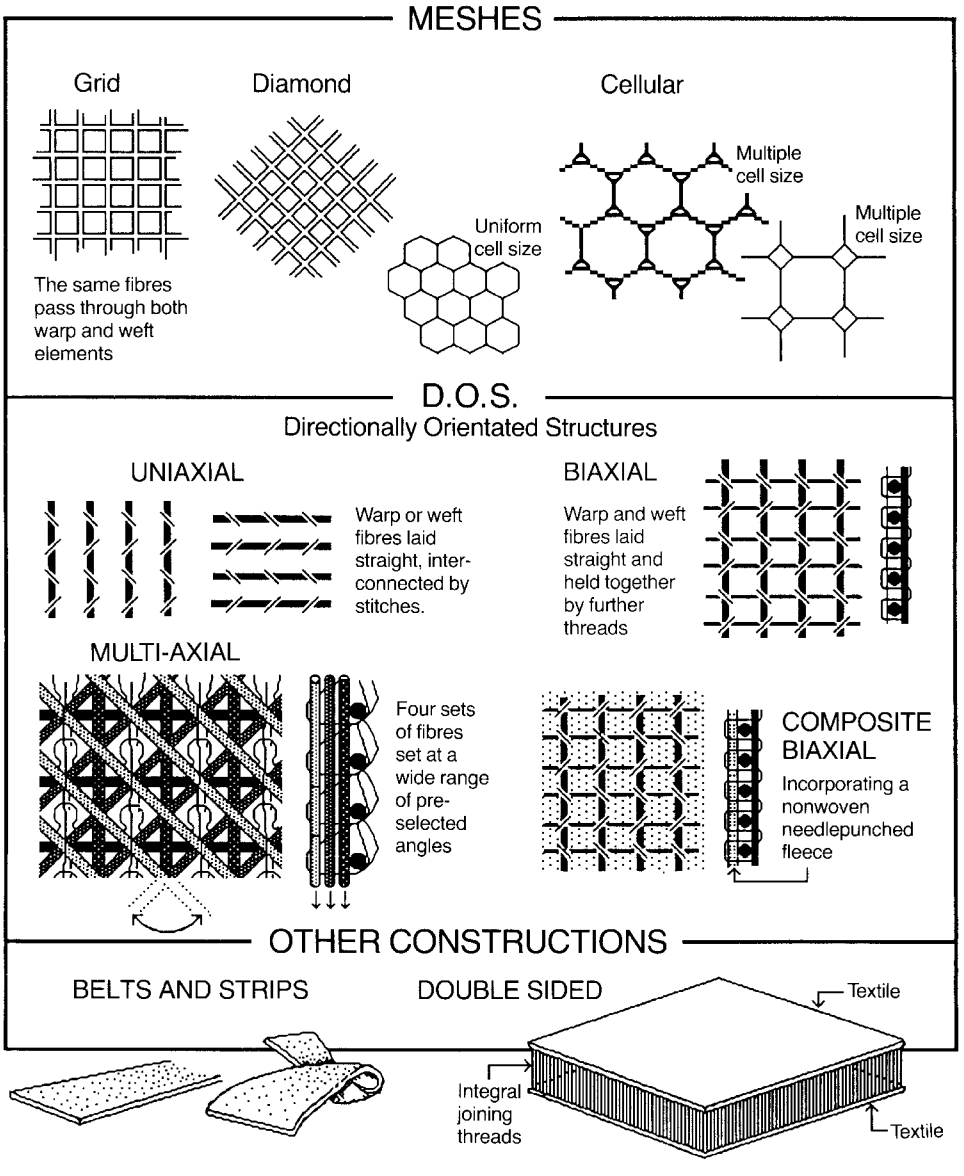

Fig. 30.2 Directionally-structured fibre (DSF) geotextile constructions [*The Karl Mayer Guide to Geotextiles*, P R Ranilor and S Raz (1989), Karl Mayer, Germany].

Warp knitting technology is more versatile than any other fabric producing technique for manufacturing nets. Different sizes and shapes of net openings can be produced. They are dimensionally stable, slip-resistant, and do not require a stabilising finish.

Karl Mayer have an eight-guide bar raschel for knitting medium-weight nets in E 6 to E 9, in a yarn count range of dtex 3000 to 6000, at a speed of 400 to 500

Skechers EX1050
Skechers v Nike

courses per minute. It has six stitch-forming bars (4 ground, 2 selvedge, and 2 inlay guide bars).

30.7 Composites

Composites are products formed by combining two or more discrete physical phases, usually a solid matrix and a fibrous reinforcing material. The reinforcing component often consists of or is made up from high–tenacity fibres as the strain-resistant structure, and is surrounded by a polymer matrix that acts as a rigidising adhesive holding the fibrous component(s) in place.

Such composites are used for high-performance parts having low specific weight. One objective is to replace metallic materials. Fibres with high tenacity can be used simultaneously with low-stretch, high-modular filament yarns. These include glass fibres, carbon, and aramide. The strength of the composite is also determined by the position of the yarns and the angle at which they are inserted into the matrix.

30.8 Warp knitted multi-axial weft insertion fabrics

Multi-axial layered fabrics are structures fixed by a stitch system retaining the several parallel yarn layers (Fig. 30.3). The yarn layers may have different orientations, differing yarn densities of the individual layers, and may include fibre webs and fleeces, film tapes, foams, etc.

Due to the drawn and parallel yarn layers, multi-axial layered fabrics are particularly suitable for bonding by resinous or polymeric materials to produce fibre-polymer composites.

The *Liba Copcentra* tricot machine has a multi-axial, magazine weft-insertion. It has been developed to stitch bond composite fibre mats at high production rates. The feeding conveyor is approximately 15-metres long and is located at the back of the machine. Each creel-supplied yarn sheet layer is laid across or along the width of the conveyor at a specified angle. The continuous mat of yarn layers is conveyed

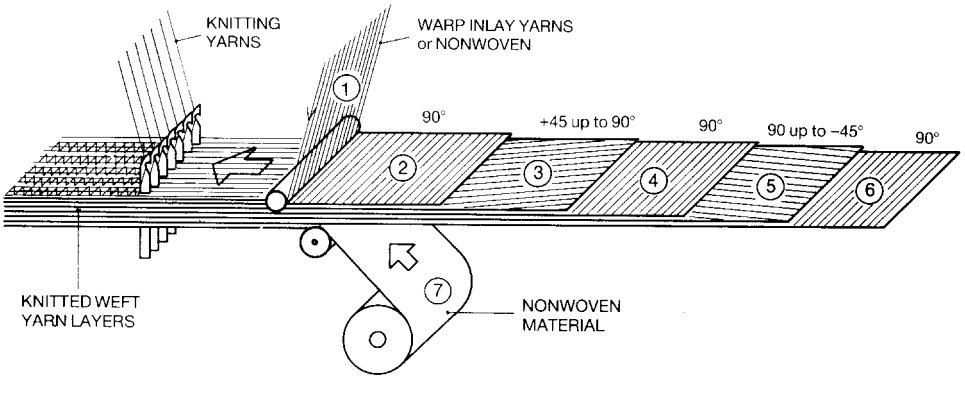

Fig. 30.3 Principle of the LIBA multi-axial magazine weft insertion warp knitting machine. Up to 6 yarn layers and one fleece layer are possible [LIBA].

Skechers EX1050
Skechers v Nike

through the knitting machine where the compound needles, supplied with warp threads, stitch through and stabilise the structure.

The standard arrangement uses 5 weft-insertion systems of which 3 systems supply parallel weft and 2 systems supply diagonal weft. Each diagonal weft thread layer can be laid at any adjustable angle from 60–45 degrees (or 90–45 degrees on request). The density of each layer can be varied and is not dependent upon the gauge. Non-woven webs can be fed into the knitting zone above or below the yarn conveyor; two guide bars can be used for stitch forming. The machine has a working width up to 245 inches (622 cm) in a gauge range of E 6 to E 24, and has a production speed of 1200 courses per minute.

30.9 Stitch bonding or web knitting

Warp knitting machine builders *Karl Mayer* build a range of *Malimo* stitch bonding machines (Fig. 30.4) [8]. Whereas warp and weft knitting construct fabrics from yarns, stitch bonding constructs fabrics from a medium such as a fibrous web using purely mechanical means. It is therefore a highly-productive method of producing textile substrates for industrial end-uses.

Using horizontally-mounted compound needles, the medium can be pierced by the pointed needle heads, so it is ideal for the production of textile composites. It is stitch-bonded either right through the structure or only on one surface in order to stabilise it. Dependent upon the model, additional yarns or fibres may or may

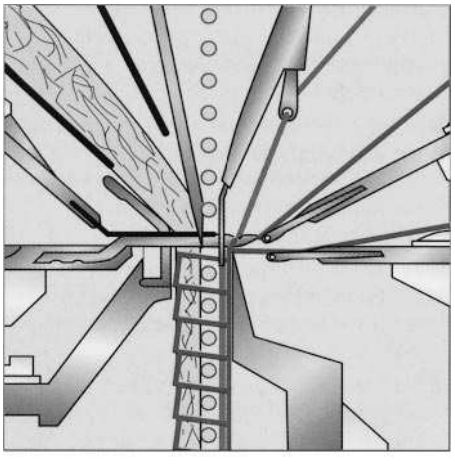

Stitch-bonding elements:
Compound needle
Closing wire
Guide needle 1st guide bar
Guide needle 2nd guide bar
Knocking-over sinker
Backing rail
Retaining pin
Warp yarn guide needle

Fig. 30.4 Malimo stitch bonding machine knitting head [Karl Mayer].

Skechers EX1050
Skechers v Nike

not be supplied to the needles. Yarn layers, webs, films or materials such as glass fibres, rockwool, or re-cycled products can be processed

Malimo web processing techniques include *Maliwatt*, *Malivlies*, *Kunit*, and *Multiknit*. The *Malimo* machines operate with one or two guide bars and offer parallel weft and multi-axial alternatives. Pile and fleece can be produced on the *Malipol* (pile yarn feed) and *Voltex* (pile web feed) machines.

The *Karl Mayer Maliwatt* stitch-bonding machine is a high-performance machine for plain stitch-bonding of loose or pre-bonded fibrous webs, as well as of substrates of various materials within a wide range of thicknesses and weights per unit area.

The advantage of mechanical bonding is that it occurs in a single process without the use of chemicals. The resultant fabric can be used in a moulded resin laminate for boats, cars and sports equipment.

A special version of the machine for processing fibreglass into a web has now been developed. The fibreglass is fed to a chopper behind the machine. This cuts the glass fibres into pre-determined lengths (25–100 mm). The chopped strands are randomly arranged in the form of a mat on a conveyor belt that feeds to the stitch forming area where they are bonded by means of a quilted seam. The mat is used to make reinforced plastic mouldings such as safety helmets and vehicle bodywork.

Working widths range from 2900 mm to 6150 mm and gauges from E 3.5 to E 22.

30.10 Spacer fabrics

A *spacer fabric* is a double-faced fabric knitted on a double needle bar machine. The distance between the two surfaces is retained after compression by the resilience of the pile yarn (usually mono-filament) that passes between them.

One reason for the development of spacer fabrics was an attempt to replace toxic, laminated-layer foam with a single, synthetic fibre type fabric, thus facilitating future re-cycling (Fig. 30.5).

Spacer fabrics are manufactured according to their function and have three variable components: fabric construction, yarn material and finishing. The hollow centre of the fabric may be filled with solid, liquid or gaseous materials (air can be used for insulation). Yarns with good moisture transportation properties may also be employed.

Partly-threaded guide bars can produce open-hole structures on each surface and air circulation can occur in the two millimetre space between the two surfaces. An important advantage is the low weight in proportion to the large volume.

The compression resistance can be adjusted by using different yarn counts in the rigid, synthetic mono-filament spacer yarns that connect the two surfaces of the fabric. Additional spacer yarns can be used where the choice of type of yarn determines properties such as moisture transport, absorbency, compression resistance, drapability, and thermal conductivity. The spacing can be up to 60 mm and widths up to 4400 mm. Fine fabrics knitted on E 32 raschels range in thickness between 1 and 4 mm.

End-uses for spacer fabrics include moulded bra cups, padding, and linings [9]. Medical applications are also being investigated [10].

Skechers EX1050
Skechers v Nike

Fig. 30.5 Raschel-knitted spacer structure used for car seat covers of the Daihatsu Move 'Aero Down Custom' model. The front is formed as an openwork mesh structure and the back as a dense structure, so that the air circulates freely in the space between, and the driver and passengers are guaranteed an optimum microclimate [*Kettenwirk-Praxis* (3/99), 40].

30.11 Circular warp knitting

Tubular, seamless, extensible nets for fishnet patterned stockings, fruit sacks, and medical support bandages can be knitted on simple, small-diameter circular warp knitting machines. The vertical latch needles are fixed to the needle cylinder, collectively rising and falling with it. They are in a conical arrangement so the hooks form a smaller circle than the stems. The warp yarn is supplied through guide-eyes drilled in a ring. The ring turns to overlap the hooks when the needles are raised and produces underlaps at the back of the needles when they are lowered. For a simple balanced net, two full rings are used.

For more complex designs, up to 4 additional patterning rings may be employed. *Tritex* (Barwell, Leicester, UK) are supporting the development of a new prototype machine [11].

The rings can be cam-driven or electronically-controlled. At 80 per cent efficiency, approximately 100 metres of fabric will be knitted per hour. The stitch length is controlled by the positive warp let-off mechanism.

30.12 V-bed technical fabrics

In *v-bed weft knitting*, the *Stoll* approach emphasises made-to-measure quick prefabrication of complex two- or three-dimensionally shaped articles (Figures 30.6 and

Skechers EX1050
Skechers v Nike

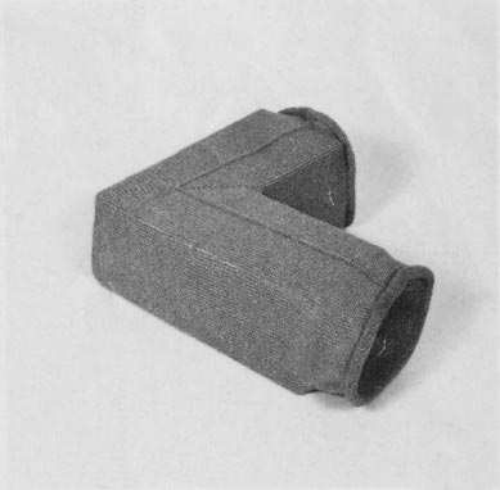

Fig. 30.6 Tube connection with rectangular cross-section [Stoll, from *Knitting Technique,* Vol. 13 (1991), 2, 124].

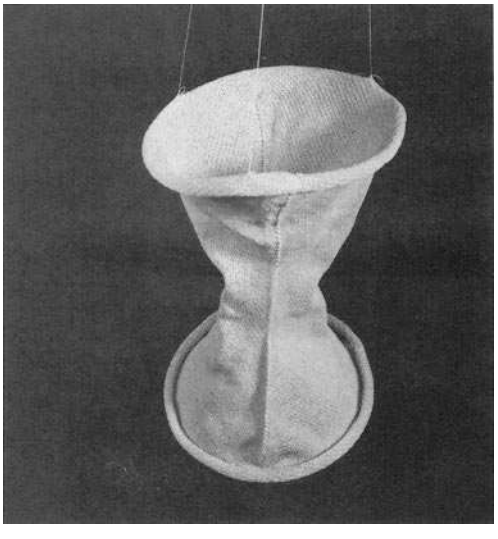

Fig. 30.7 Funnel-shaped tube connection in Kevlar [Stoll, from *Knitting Technique*, Vol. 13 (1991), 1, 123].

30.7), including the knitting of a wide range of materials such as metals in fibre or filament form. Examples of end-uses include upholstery for office furniture, one-piece seat-heating circuits, helmets, catalytic converters, pressure tanks made of composite materials, and support bandages that are knitted to size and shape [12,13].

There is no doubt that when used as a type of reinforced material, weft knitted fabrics have their disadvantage in mechanical properties (low resistance and modulus) due to the loop construction used, but in cases where elasticity, flexibility and high energy absorption are required, weft knitted fabrics have their advantages.

Skechers EX1050
Skechers v Nike

Compared with other techniques that have been used for the production of 3D fabrics, the advantages of flat knitting are as follows:

- It is a flexible manufacturing process.
- The change of fabric structures and forms is very fast.
- The change of yarn types in the same structure is also possible.
- Possibility of knitting to shape without cutting waste or making-up time.
- Complicated shapes can be developed [14,15].

References

1. ANON., Techtextil Review, *Knit. Int.*, (1999), June 17–19.
2. ANON., Warp Knitted textiles for car interiors, *Kettenwirk-Praxis*, 4/94, E 17–20.
3. RIGBY, A., ANAND, S. and MIRAFTAB, M., Medical Textiles, *Knit., Int.*, (1994), Feb., 39–42.
4. ANON., Technical Textiles-Warp Knitted, *KettenWirk-Praxis*, 3/99, E 15, 16.
5. (Welbeck Technical Textiles, England).
6. RANKILOR, P. R. and RAZ, S., The Karl Mayer Guide to Geotextiles, (1989).
7. ANON., Knitting in detail, *Knitting Tech.*, 1/2000, 20, 21.
8. SCHREIBER, J., PLOCH, S. and KETTELMANN, W., Composite Structures using the Malimo knitting technology, *Kettenwirk-Praxis*, 1/95, E 5–8.
9. ANON., *Kettenwirk-Praxis*, 4/98, E 15–19.
10. ANON., *Kettenwirk-Praxis*, 1/2000, E 25.
11. MERMELSTEIN, S., Multipurpose circular warp knitting machine, *Knit. Tech.*, (1999), 2/99, 22–23.
12. STOLL, T., Technical textiles, *Knitting Technique*, (1991), 2, 120–125.
13. ANON., The knitted wire fabric challenge, *Knitting Technique*, (1/2000), 20, 21.
14. HONG, H., DE ARAUJO, M. and FANGUEIRO, 3D, Technical Fabrics, *Knit., Int.*, (1996), Nov., 55–57.
15. REMPP, W., Using flat knitting machines for industrial textiles, *Knit., Tech.*, (1996), Sept., 258.

Skechers EX1050
Skechers v Nike

Appendix

Textbook availability

Information on current textile books and periodicals in-print including free catalogue entitled 'Textile Titles of the World' available from: Blackwells Bookshops, 21 Blenheim Terrace, Woodhouse Lane, Leeds LS2 9HJ Tel: 0113 243 2446 Fax: 0113 243 0661 E-mail: leeds@blackwellsbookshops.co.uk

Further information

Textile Technology Catalogue, Woodhead Publishing, Abington Hall, Abington, Cambridge CB1 6AH,
International Directory and Review 2000, and

Textile Terms and Definitions, Published by The Textile Institute St James's Buildings, Fourth Floor, Oxford St, Manchester M1 6FQ

Technical dictionary for knitwear and hosiery production (German/English/Italian), Eva Lesykova, Meisenbach GmbH, Hainstrasse 18, D-96047, Bamberg, Germany.

RAZ, S., *Flat Knitting*, Universal Maschinen Fabrik (Meisenbach 1993). Based on the Universal flat knitting range of machines, the book covers manually as well as mechanically and electronically controlled machines, computer controls and pattern preparation and programming.

RAZ, S., *Flat Knitting – The new generation* (1991), Meisenbach GmbH. Based particularly on the Stoll CMS range of flat machines, the book progresses from elementary principles through to programming and advanced design.

RAZ, S., *Warp Knitting Production* (1987), Heidelberg Verlag Melliand Textilberichte, Covers the range of warp knitting machinery and structures from elementary through to the most advanced practices.

WILKINS, C., *Warp knit machine elements* (1997).

WILKINS, C., *Warp knit fabric construction* (1996).

REISFELD, A., *The history of warp knit arts and trades* (1999) American Society of Knitting Technologists, New York, US.

Knitting International (formerly the Hosiery Trade Journal) published monthly by World Textile Publications Ltd, 1 Longlands St., Bradford W. Yorks., UK, BD1 2TP.

Knitting Technology (formerly *Knitting Technique*, formerly English edition of *Wirkerei und Strickerei*), Meisenbach GmbH, POBox 2069, D-96011 Bamberg, Germany.

Kettenwirk-Praxis (with English translations). Published quarterly by Karl Mayer Textilmaschinenfabrik GmbH, Postbox 1120, D-63166 Obertshausen, Germany. Provides a comprehensive explanation of up to date practices and developments in warp knitting.

Skechers EX1050
Skechers v Nike

Index

Index Terms	Links			
à jour (loop transfer stitches)	172			
accordion top (socks)	180			
Aitkin's circular latch needle rib machine	89			
Argyle tartan socks	104			
Aston (Lee's knitting frame)	12			
Astro turf (raschel)	369			
atlas (warp knit)	295	296	297	
automatic kick-back (V-bed)	241			
balanced structure (weft knitted)	45			
ballet toe	266			
Barfuss, Wilhelm (raschel)	301			
Barton, Luke, narrowing mechanism	194			
base weft knitted structures	60			
bearded needle	10	20	21	22
Bentley Komet (hosiery)	262			
Betts, Max, presser foot	232			
binding-off (making-up)	17			
blind-lapping (warp knitting)	323			
blister	149	150	151	
bourrelet	149			
Brinton trick wheel (circ. knit selection)	123			
broche (warp knit embroidery)	333			
Brunel (circular machine patent)	12			
bulked yarns	4			
butt				
lengths	110			
positions	117			
set-outs	118			
cable stitch	222			
cams (engineering)	34			
(knitting)	33	34	35	
cap knitting	7			
Caperdoni, Waltex	311			
cardigan				
cams	97			
stitches (V-bed)	218			
cast-off (knitting cycle)	16			
centralised stitch control (circ. fabric machines)	157			
chain (warp knitting)				
links	289	290	291	292

This page has been reformatted by Knovel to provide easier navigation.

Index Terms	Links				
notations	291				
charmeuse (warp knit)	317				
Christ's seamless garment	7				
circular garment length machines	244				
circular warp knitting machines	377				
circular weft knitting machines	82	87	88	89	
production calculations	159	160			
circulars v flats	244				
circumferential speed (circular weft knitting machines)	159				
classes of weft knitting machines	85				
closed lap (warp knitting)	41				
cnyttan	7				
Colbert (and the hand frame)	9				
coloured stitch designs	100				
Comez crochet machine	310				
composites (technical textiles)	374				
compound needle	26	27			
comparison with latch needle	27	28	29		
compound needle warp knitting machine	305				
computer graphics and pattern preparation	137				
Conti hosiery	270				
contra knitting	67	158			
contra sinkers	241				
Coptic knitting	7				
cord, warp knitted	326				
Cotton Machine *see* Cotton's Patent					
Cotton William (Cotton's Patent straight bar frame)	194				
Cotton's Patent	194	195	196	197	198
	199	200	201	202	203
	204	205	206		
course (def)	16	17			
course length (def)	17				
and run-in per rack	53	54			
Co-we-nit (raschel)	330				
Crane (warp knitting inventor)	12				
Crimplene	4				
crochet machine	306	307			
cross stitch (hand knit stitch)	7				
cut (machine gauge)	30				
cut edge (cut and sew)	45				
cut pile	58				
cut presser and miss-press (warp knitting)	335	336			
Dawson wheel (warp knitting)	12				
decitex (yarn count)	5				
Decroix (circular machine patent)	12				

This page has been reformatted by Knovel to provide easier navigation.

Index Terms	Links				
delayed timing (weft knitting)	71				
denier yarn count	5				
Derby rib attachment	9				
design appearance requirements	18				
Detexomat	270				
direct and indirect (yarn feed)	216				
direct yarn count	5				
directionally orientated structures	373				
disc selection (circular machine)	127				
dividers (purl machines)	12				
double cylinder garment length machines	247				
hosiery machines	262				
double jersey (history)	145	147	148		
inlay	153	154	155		
non-jacquard stitches	148	149			
double needle bar raschels	357	358	359	360	361
	362	363	364	365	366
	367	368	369		
lapping principles	358				
double needle overlaps	291				
double pique double jersey	150	151	276		
double-faced structures	44				
balanced	45				
double-sided plush	167				
doubling (full-fashioning)	204				
Doyle	274				
Draper, Samuel	351				
drop stitch	91	92			
Dubied, H E (V-bed inventor)	224				
E 14 gauge	29				
Eisenstuck (flat machine inventor)	207				
elasticised warp knitted fabrics	349				
electronic guide bar control	291	343			
electronic needle selection	115	130	131	132	133
electronic selection (Shima Seiki)	226				
electronics in knitting (the advantages)	134	135	136	137	
embroidery plating (weft knitting)	12	105			
fabric					
geometry	280	281	282		
machines	8	82	83		
‘quality’	54				
take-down	284				
weight calculation	9				
face loop	43				
fall-plate (raschel)	328	332			
fancy lacing stitches	170				

This page has been reformatted by Knovel to provide easier navigation.

Skechers EX1050
Skechers v Nike

Index Terms	Links				
fashioning calculations	185				
fibre	3				
filament	3				
filet lace	173				
filler	329				
FIRST (Shima V-bed)	240				
fishnet (weft knitted) two course	93				
flat bed purl	207				
flat knitting (principles and structures)	207	208	209	210	211
	212	213	214	215	216
	217	218	219	220	221
	222	223			
flat machines rib	60	67	68	69	70
	71	72	86	87	
fleecy (weft knitted)	161	162	163		
fleecy interlock	164				
float plating	93				
float stitch	90	92			
FNF (warp knitting machine)	333				
Fouquet (circular machine)	87				
front of a knitting machine	19				
front of the machine	19				
full jacquard (weft knitted)	120				
full-fashion gauges	208				
garment length machines	8	82	83	84	
gauges	196	208	258		
geometric fixed selection (weft knitting)	120				
geotextiles	371	372			
GL tights	272				
Golden Lady	271				
graduated compression	260				
graduated stiffening	264				
Griswold hand circular	89				
guide bar					
nesting (warp knitting)	342				
pattern mechanism	289				
shogging summary drive	343				
half gauge	29				
hand frame					
(invention)	9				
(knitting)	10	11	12		
hand operated V-bed machines	209				
hand pin knitting, principles, spread of knowledge	7	8	9		
HATRA	274				
held loop	90	91			
shaping	190				
Henry VIII (stockings)	7				

This page has been reformatted by Knovel to provide easier navigation.

Index Terms	Links				
high speed knitting	283				
Hindret (hand frame drawings)	9				
hopsack (single jersey)	147				
horizontal striping	101	102			
hosiery on small diameter machines	256				
hosiery, product, gauges, classes of hosiery machine	256	257	258	259	260
	261	262	263	264	265
	266	267	268	269	270
	271	272	273		
indirect yarn count	5				
individual stitch selection	105				
inlay (see laying-in)	54	55			
intarsia	102	103	104		
integral garment shaping (flat knitting)	18	84	192	193	
interactive computer graphics	137				
interlock (circular weft knitting)	60	73	74	75	76
interlooping (mechanical fabric forming)	2				
intertwining (mechanical fabric forming)	1				
interweaving (mechanical fabric forming)	1				
inturned welt (stockings and socks)	179				
invisible fleecy *or* three-thread fleecy (single jersey weft knitted)	161	162	163		
jack sinkers (hand frame)	12				
jacquard					
backing	107	108			
design areas	110				
raschels	351				
rib	107				
selection (full mechanical)	123				
single jersey	106				
Jacquardtronic	340	352	353	355	
Jeacock compound needle patent	26				
jersey cord	149				
Jumberca	253				
Karl Mayer	340	341	342	343	344
	345	346	347	348	349
	350	351	352	353	354
	355	356			
HDR	365				
Knapton	282				
knitted loop					
stitch	42	90			
structure, notation	16	19			
knitted silk stockings	8				

This page has been reformatted by Knovel to provide easier navigation.

Index Terms	Links			
knitting	1			
(def)	7			
(V-bed widths)	208			
knitting action	197	198		
of a bearded needle	20			
of a latch needle	24			
knitting cams (raising, swing, stitch, up-throw, guard bolt)	35			
bolt, upthrow, raising, stitch guard	34	35		
machine (main features)	18			
notations	46			
knitting requirements	4			
knitting technology (potential of)	13	14		
knitting tubular rib on a V-bed flat machine	238			
knitting waves (Tsudakoma)	241			
knock-over	16			
knop	337			
knop structures	221			
lacing points (full-fashioned)	205			
laddering	61	261		
ladder-resist	261			
ladies' fine gauge hosiery	258	259	260	261
ladies' hosiery	258			
Lamb, Rev Isaac Wixom (flat machine patent)	207			
lap (warp knitting)	39			
lapping diagrams	291	292		
latch needle				
advantages of	25			
features of	23	24		
history of	22			
latch needle and compound needle compared	27			
latch-opener fabric	92			
laying-in, inlay	54	55	328	
rules	329	332		
lead sinkers	12			
Leaver's lace	13			
effect	354			
Lee, William (inventor hand frame)	9	194		
Liba, Shussomat, Weftloc	333			
linear motor drive (Tsudakoma flat machine)	241			
linking	267			
links-links	77			
locknit (warp knitting)	317			
Lonati (hosiery)	265			

This page has been reformatted by Knovel to provide easier navigation.

Skechers EX1050
Skechers v Nike

Index Terms	Links				
loop forming (three types)	37				
loop holder	10				
loop length	276				
loop raised	319				
loop transfer stitches uses	171	172	173	174	175
	176	177	178	179	180
	181	182			
on straight bar frame	201	202	203		
Luddite riots	9				
Lycra	4				
machine gauge	29	30			
machine knitting (def)	16				
MacQueen, K (electronic flat machine inventor)	224				
marquisette (warp knitted)	348				
Matec hosiery machines	260				
Matec HF	260	264	268		
McNary heel patent	258				
mechanical jacquard selection	226				
mechanical selection	123				
Mecmor Variatex	253				
Mellor, Moses (circular machine)	89				
Mellor-Bromley selection	125				
mesh structures	330				
Milanese	285	319			
mirror repeat	118				
Mishcon, Lestor (high pile machine inventor)	162				
miss press	335				
miss-lapping	323				
Monk, S A	204				
Moratronic (electronic rib jacquard machine)	131	132	133		
Muller crochet machine	307	308			
multi-axial weft insertion	374				
multi-bar tricot lace machines	342				
multi-carriage flat	236				
multi-guide bar	340				
multiple gauge technique	234				
multi-step geometrical selection	118	123			
nahyat	7				
Nalbinding	7				
NeB	5				
needle	19				
see also bearded, latch, compound, slide and carbine needle					
needle loop	38				
intermeshing points	43				
sequence	95				

This page has been reformatted by Knovel to provide easier navigation.

Skechers EX1050
Skechers v Nike

Index Terms	Links				
needle pitch	241				
NeK	5				
new loop	16	43			
Newton	258				
Nm	5				
nylon	3				
old loop	16				
one piece tights	271				
open lap (warp knitting)	41				
open top, single jersey machine	63				
open shed	333				
openwork	57				
overfed pile	320				
overlap (warp knitting)	39	40			
overlap/underlap variations	293				
Paget moveable needle bar	194				
part threaded guide bars	323				
pattern changing (raschel double needle bar)	365				
pattern guide bars	341				
pattern repeats	118				
pattern row weft knitted (def)	17				
pattern wheel design areas	128	129	130		
pattern wheels	120	126			
patterned plush	167				
patterns (weft knitted)	115				
peg frame	10				
pelerine eyelet	176				
piecegoods	82				
Piezo jacquard	356				
Piezo-electronic selection	12				
pile	58	366			
pillar stitch	9				
warp knitted	293	330			
pin net	325				
pitch	29				
plain	60	61	62	63	64
	65	66	67		
plain loop transfer	172				
plating					
(def)	55	56	57	104	105
reverse	104				
plush	58	164			
full density	167				
Polar fleece	166				
power flat knitting (automatic)	224-243				

This page has been reformatted by Knovel to provide easier navigation.

Index Terms	Links				
power net, warp knit	350				
presser	10				
press-off (warp knitting)	338	339			
press-off stitch	91	92			
Pretty Polly	271				
primary knitting elements	29				
primary structures (weft knitting)	60				
production of heels and toes	265				
Punto di Roma (weft knitted)	152	276			
purl	60	79	80	81	82
	83	84			
Queen Elizabeth I (stockings)	8				
queenscord (weft knitted)	318				
racked rib	219				
racked welt	181				
raschel lace (development of)	340				
gauge	344				
raschel machine	301	302	303	304	305
rayon	3				
reciprocated knitting	189				
Redgate (raschel patent)	301	361			
Relanit, Mayer	158	159			
Remys-Cole (hosiery patent)	260				
reverse (left) loop	43				
reverse plating	104				
revolving cam box (and stationary needle cylinder)	34	36			
revolving cylinder (and stationary cam box)	34	36			
rib jacquard backing	108				
rib knitting	70				
rib loop transfer	173				
rib to plain	85	204			
Robinson, Frank, presser foot	232	233	234		
roll welt	181				
Rosso	267				
rotary drop cam (Monarch circ. Fabric machines)	157				
RTR	250				
run-down toe	267				
run-in per rack	53				
run-in ratios	320				
running-on (full-fashioned, making-up)	204				
sandfly net (warp knit)	326	327			
Sangiacomo (hosiery machines)	268				
satin (warp knit)	319				
Scott and Williams	268				
seaming (automatic)	270				

This page has been reformatted by Knovel to provide easier navigation.

Index Terms	Links			
seamless bodywear	255			
seamless glove knitting	237			
selection devices	118			
disc	125			
mono system	130			
multi-step	123			
pattern wheel	128	129	130	
selvedge	45			
separation	183			
separation of garments (automatically on machine)	26			
sequential knitting	85			
sharkskin (warp knitted)	317			
shaping during knitting	164	184		
shell-stitch (warp knitting)	337			
Shima Seiki	225			
compound needle	28	29		
Shima total design system	144			
shog	286	288		
shogging mechanism	289			
shogging of guide	37			
simplex machine	357	359	360	361
simulation (loop) computer software	138			
Monarch	137			
single cylinder hosiery machines	262			
single guide bar fabrics	46			
single jersey	63	145		
tuck and float stitches	147			
single-faced structures	44			
sinker				
(loop forming, holding-down, knockingover)	10	31	32	33
loop transfer	176	177	178	
see also pelerine eyelet				
loops	17	39		
plush	164			
timing	66			
top	63			
sinkers and dividers	12			
sinkerwheel plush	165			
slide compound needle	240			
sliver high pile	168			
slurcock (frame knitting)	10			
spacer fabrics (double needle bar raschel)	376			
speed factor	159			
SPJ Mellor-Bromley	247			
split cam carriages	215			
split stitch (filling-in stitch V-bed shaping)	236			
spot *or* knop	337			
sprang	7			

This page has been reformatted by Knovel to provide easier navigation.

Skechers EX1050
Skechers v Nike

Index Terms	Links				
start-up comb	206				
Steiger Vesta Multi (V-bed flat machine)	206				
step motor	219				
stitch					
bonding (non-woven)	375				
density (def)	17	18			
length	42				
length shaping	191				
pressing-down	231	232	233	234	
selection	105				
shaping	189	190			
Stoll CMS flat machine	137				
CAD, SIREX pattern prep system	140	141	142	143	
Stoll H	225				
storage feed	277				
straight bar frames	12	85	194	195	196
	197	198	199	200	201
	202	203	204	205	206
and full-fashioning	194				
stretch tricot	350				
Stretton and Johnson (double cylinder hosiery machine)	262				
striping	101				
Strutt's Derby rib	12				
Stuttgarter Mailleuse (circular machine)	87				
summary guide bar drive	344				
surface relief and openwork fabrics misslapping	323				
SWG-V	240				
SWG-X	240				
swing	286	288			
swinging of guide	37				
synchronised timing	71				
synthetic fibres	4				
take-down	284				
tape positive feed	277				
technical back (left side)	44				
technical face (right side)	44				
technical textiles	370				
technically upright	18				
Terrot (circular machines)	87	131			
terry	339				
by press-off	339				
tex count	5				
texere	1				
Textronic	355	340			
the bearded needle	10				

This page has been reformatted by Knovel to provide easier navigation.

Skechers EX1050
Skechers v Nike

Index Terms	Links				
the computerised knitting machine	136				
thread	3				
three colour jacquard	106				
three-thread fleecy	162				
three-way technique	97				
tightness factor	281				
tights	270				
timing	71	72			
toe closing	267				
Townsend, latch needle	12				
tricot	313	314	315	316	
tricot machine	29	298	300		
Tritex	377				
true rib	258				
Tsudakoma TFK	241	242			
tubular articles	363				
tubular fabric	45				
tubular welt	181				
tuck presser	98				
tuck stitch	90	94	95	96	97
tulle	344				
tulle, marquisette, voile (warp knitted)	348				
two guide bar warp knitted structures	313				
loop raised, satin, locknit, Tricot sharkskin, queenscord	314				
two types of flat machine	207				
types of closed toe	268				
underlap	17	39	40		
unrove	17				
upright loop structures	18	46			
variable width carriage traverse	231				
varying float stitches	97				
varying tuck stitches	97				
V-bed cam system	211				
velour	164	319			
velvet	319				
verdol	351				
Vignoni (compound needle)	28				
waffle	362				
wale (def)	17				
wale fashioning	184	185	186	187	
wales	16				
Waltex machine	311				
warp and weft knitting compared	48	49	50	51	52
	53	54	55	56	57

This page has been reformatted by Knovel to provide easier navigation.

Index Terms	Links				
	58	59			
warp guide lapping	37	39			
warp knit basic principles	286	287	288	289	290
	291	292	293	294	295
	296	297			
development of	12	13			
warp knitting machines	298				
warp let-off	277	278	279		
electronic control (Karl Mayer)	279				
warp pattern mechanism	289				
weaving	1				
web holder (sinker)	32				
web knitting	375				
weft insertion	55	328			
full-width	333				
weft knitted fabric production	145				
weft knitted fabric relaxation	279				
weft knitting machines (evolution)	12				
three classes of	85				
welt stitch	92				
welts	179				
WholeGarment knitting technique	237				
Wise, S (power frame)	194				
worsted count	5				
wrap patterning	169				
wrapping (weft knitting)	42				
yardgoods	82				
yarn	3				
yarn count systems	4	5	6		
conversion formulae	5				
yarn feeding	36	214			
Y-heel	266				
‘Z’ or slant sinker, Monarch	159				
Zodiac hosiery machine	260				

This page has been reformatted by Knovel to provide easier navigation.

Skechers EX1050
Skechers v Nike