US009730484B2

(12) **United States Patent**
Dua et al.

(10) **Patent No.: US 9,730,484 B2**
(45) **Date of Patent: Aug. 15, 2017**

(54) **ARTICLE OF FOOTWEAR HAVING A FLAT KNIT UPPER CONSTRUCTION OR OTHER UPPER CONSTRUCTION**

(71) Applicant: **NIKE, Inc.**, Beaverton, OR (US)

(72) Inventors: **Bhupesh Dua**, Portland, OR (US); **Edward N. Thomas**, Portland, OR (US)

(73) Assignee: **NIKE, Inc.**, Beaverton, OR (US)

(*) Notice: Subject to any disclaimer, the term of this patent is extended or adjusted under 35 U.S.C. 154(b) by 671 days.

(21) Appl. No.: **14/087,169**

(22) Filed: **Nov. 22, 2013**

(65) **Prior Publication Data**

US 2014/0150295 A1 Jun. 5, 2014

Related U.S. Application Data

(60) Division of application No. 13/533,140, filed on Jun. 26, 2012, now Pat. No. 8,650,916, which is a (Continued)

(51) **Int. Cl.**

D04B 1/22	(2006.01)
A43B 1/04	(2006.01)
A43C 1/04	(2006.01)
A43B 23/02	(2006.01)
A43B 3/00	(2006.01)

(52) **U.S. Cl.**

CPC ..... ***A43B 1/04*** (2013.01); ***A43B 3/0031*** (2013.01); ***A43B 23/0235*** (2013.01); (Continued)

(58) **Field of Classification Search**

CPC ... D04B 7/30; D04B 7/24; D04B 7/28; D04B 1/24; D04B 1/26; D04B 7/32; (Continued)

(56) **References Cited**

U.S. PATENT DOCUMENTS

601,192	A	3/1898	Woodside
1,215,198	A	2/1917	Rothstein

(Continued)

FOREIGN PATENT DOCUMENTS

CN	1925763	A	3/2007
CN	201536681	U	8/2010

(Continued)

OTHER PUBLICATIONS

European Search Report from corresponding European Application No. 15168417.2, dated Sep. 7, 2015 (7 pages).

(Continued)

Primary Examiner — Danny Worrell

(74) *Attorney, Agent, or Firm* — Andrew A. Hufford; Brinks, Gilson & Lione

(57) **ABSTRACT**

Flat knitting allows production of textile structures (e.g., for use in footwear uppers) of a final desired shape such that textile cutting steps can be avoided. Flat knitted elements also can be formed directly in desired three dimensional shapes, which can help avoid the need to use additional support structures (e.g., in footwear construction). By selectively placing multiple different yarns and/or stitch patterns at multiple different locations in the overall structure during the knitting process, flat knitted products may have multiple different physical properties (e.g., different stretchability, different moisture management capabilities, etc.) at multiple different locations or zones within a single, unitary construction (e.g., different properties at different zones or locations within a single footwear structure). Additionally, flat knitting can be used to produce pockets, tunnels, or other layered structures in the final product.

19 Claims, 18 Drawing Sheets

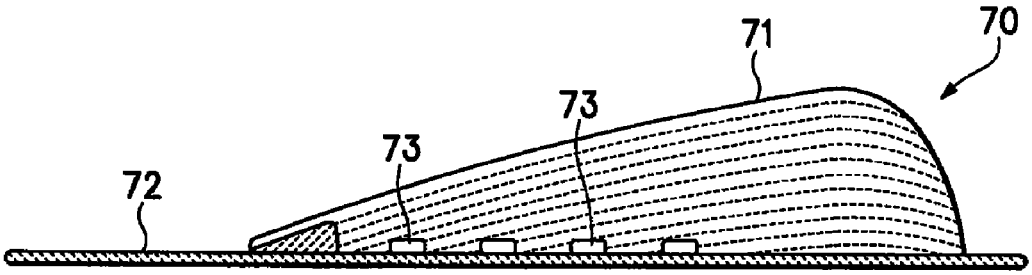

Related U.S. Application Data

continuation of application No. 12/829,788, filed on Jul. 2, 2010, now Pat. No. 8,215,132, which is a division of application No. 11/558,499, filed on Nov. 10, 2006, now Pat. No. 7,774,956.

(52) **U.S. Cl.**
CPC ***A43B 23/0275*** (2013.01); ***A43C 1/04*** (2013.01); ***D04B 1/22*** (2013.01); *D10B 2403/0332* (2013.01); *D10B 2501/043* (2013.01); *D10B 2501/061* (2013.01)

(58) **Field of Classification Search**
CPC A43B 23/0205; A43B 23/0235; A43B 23/024; A43B 23/0245; A43B 23/042; A43B 1/04
USPC 36/48, 49
See application file for complete search history.

(56) **References Cited**

U.S. PATENT DOCUMENTS

1,597,934 A 8/1926 Stimpson
1,888,172 A 11/1932 Joha
1,902,780 A 3/1933 Holden et al.
1,910,251 A 5/1933 Joha
2,001,293 A 5/1935 Wilson
2,047,724 A 7/1936 Zuckerman
2,147,197 A 2/1939 Glidden
2,314,098 A 3/1943 McDonald
2,330,199 A 9/1943 Basch
2,376,399 A 10/1943 Yandell
2,343,390 A 3/1944 Ushakoff
2,400,692 A 5/1946 Herbert
2,440,393 A 4/1948 Clark
2,569,764 A 10/1951 Jonas
2,586,045 A 2/1952 Hoza
2,608,078 A 8/1952 Anderson
2,641,004 A 6/1953 Whiting et al.
2,675,631 A 4/1954 Doughty
2,770,055 A 11/1956 Hayden
2,904,980 A 9/1959 Stinson
2,994,322 A 8/1961 Cullen et al.
3,402,323 A 9/1968 Longstreth
3,583,081 A 6/1971 Hayashi
3,603,006 A 9/1971 Davenport et al.
3,694,940 A 10/1972 Stohr
3,704,474 A 12/1972 Winkler
3,766,566 A 10/1973 Tadakoro
3,778,856 A 12/1973 Christie et al.
3,952,427 A 4/1976 Von den Benken et al.
3,972,086 A 8/1976 Belli et al.
4,027,402 A 6/1977 Liu et al.
4,031,586 A 6/1977 Von den Benken et al.
4,211,806 A 7/1980 Civardi et al.
4,232,458 A 11/1980 Bartels
4,255,949 A 3/1981 Thorneburg
4,258,480 A 3/1981 Famolare, Jr.
4,317,292 A 3/1982 Melton
4,373,361 A 2/1983 Thorneburg
4,447,967 A 5/1984 Zaino
4,465,448 A 8/1984 Aldridge
4,607,439 A 8/1986 Sogabe et al.
4,646,727 A 3/1987 Chambers
4,737,396 A 4/1988 Kamat
4,750,339 A 6/1988 Simpson et al.
4,756,098 A 7/1988 Boggia
4,785,558 A 11/1988 Shiomura
4,813,158 A 3/1989 Brown
4,878,504 A 11/1989 Nelson
4,967,494 A 11/1990 Johnson
4,998,722 A 3/1991 Scott
5,031,423 A 7/1991 Ikenaga
5,067,260 A 11/1991 Jenkins, Jr.
5,095,720 A 3/1992 Tibbals, Jr.
5,117,567 A 6/1992 Berger
5,152,025 A 10/1992 Hirmas
5,192,601 A 3/1993 Neisler
5,257,969 A 11/1993 Mance
D346,686 S 5/1994 Hatfield
5,345,638 A 9/1994 Nishida
5,353,524 A 10/1994 Brier
5,371,957 A 12/1994 Gaudio
5,377,430 A 1/1995 Hatfield et al.
5,461,884 A 10/1995 McCartney et al.
5,511,323 A 4/1996 Dahlgren
5,572,860 A 11/1996 Mitsumoto et al.
5,575,090 A 11/1996 Condini
5,623,840 A 4/1997 Roell
5,729,918 A 3/1998 Smets
5,735,145 A 4/1998 Pernick
5,746,013 A 5/1998 Fay, Sr.
5,765,296 A 6/1998 Ludemann et al.
5,884,419 A 3/1999 Davidowitz et al.
5,996,189 A 12/1999 Wang
6,029,376 A 2/2000 Cass
6,032,387 A 3/2000 Johnson
6,052,921 A 4/2000 Oreck
6,088,936 A 7/2000 Bahl
6,151,802 A 11/2000 Reynolds
6,170,175 B1 1/2001 Funk
6,227,010 B1 5/2001 Roell
6,308,438 B1 10/2001 Throneburg et al.
6,333,105 B1 12/2001 Tanaka et al.
6,367,168 B1 * 4/2002 Hatfield A43B 7/06 36/101
6,401,364 B1 6/2002 Burt
6,558,784 B1 5/2003 Norton et al.
6,588,237 B2 7/2003 Cole et al.
6,754,983 B2 6/2004 Hatfield et al.
6,910,288 B2 6/2005 Dua
6,922,917 B2 8/2005 Kerns et al.
6,931,762 B1 8/2005 Dua
6,986,269 B2 1/2006 Dua
D517,297 S 3/2006 Jones et al.
7,016,867 B2 3/2006 Lyden
7,051,460 B2 5/2006 Orei et al.
7,056,402 B2 6/2006 Koerwien et al.
7,107,235 B2 9/2006 Lyden
7,347,011 B2 3/2008 Dua et al.
7,441,348 B1 10/2008 Dawson
7,543,397 B2 6/2009 Kilgore et al.
7,568,298 B2 8/2009 Kerns
7,682,219 B2 3/2010 Falla
7,774,956 B2 8/2010 Dua et al.
8,215,132 B2 7/2012 Dua et al.
8,225,530 B2 * 7/2012 Sokolowski ..... A43B 3/0031 12/142 G
8,448,474 B1 5/2013 Tatler et al.
8,490,299 B2 7/2013 Dua et al.
8,650,916 B2 2/2014 Dua et al.
2002/0078599 A1 6/2002 Delgorgue et al.
2002/0148258 A1 10/2002 Cole et al.
2003/0126762 A1 7/2003 Tseng
2003/0191427 A1 10/2003 Jay et al.
2004/0118018 A1 6/2004 Dua
2004/0181972 A1 9/2004 Csorba
2005/0115284 A1 6/2005 Dua
2005/0193592 A1 9/2005 Dua et al.
2005/0273988 A1 12/2005 Christy
2005/0284000 A1 12/2005 Kerns
2006/0010931 A1 1/2006 Lynch et al.
2006/0048413 A1 3/2006 Sokolowski et al.
2006/0059715 A1 3/2006 Aveni
2006/0130359 A1 6/2006 Dua et al.
2006/0162187 A1 7/2006 Byrnes et al.
2007/0022627 A1 2/2007 Sokolowski et al.
2007/0180730 A1 8/2007 Greene et al.
2007/0294920 A1 12/2007 Baychar
2008/0017294 A1 1/2008 Bailey et al.
2008/0078102 A1 4/2008 Kilgore et al.
2008/0110048 A1 5/2008 Dua et al.
2008/0189830 A1 8/2008 Egglesfield
2008/0313939 A1 12/2008 Ardill
2009/0068908 A1 3/2009 Hinchcliff

(56) **References Cited**

U.S. PATENT DOCUMENTS

2010/0051132	A1	3/2010	Glenn
2010/0154256	A1	6/2010	Dua
2010/0170651	A1	7/2010	Scherb et al.
2011/0030244	A1	2/2011	Motawi et al.
2011/0078921	A1	4/2011	Greene et al.
2012/0233882	A1	9/2012	Huffa et al.
2012/0240429	A1	9/2012	Sokolowski et al.
2012/0255201	A1	10/2012	Little
2012/0285043	A1	11/2012	Dua et al.
2013/0160323	A1	6/2013	Hsiao
2013/0269209	A1	10/2013	Lang et al.
2013/0269212	A1	10/2013	Little
2014/0137433	A1	5/2014	Craig
2014/0150292	A1	6/2014	Podhajny et al.
2015/0075031	A1	3/2015	Podhajny et al.

FOREIGN PATENT DOCUMENTS

CN	103556384	A	2/2014
DE	475363	C	4/1929
DE	870963	C	3/1953
DE	1084173		6/1960
DE	19738433		4/1998
DE	19728848		1/1999
EP	0448714		10/1991
EP	0728860		8/1996
EP	0758693		2/1997
EP	0279950	A2	8/1998
EP	0898002	A2	2/1999
EP	1233091		8/2002
EP	1437057	A1	7/2004
EP	1563752	A1	8/2005
EP	1602762	A1	12/2005
EP	1972706	A1	9/2008
EP	2805638		11/2014
FR	2171172		9/1973
GB	12787		0/1904
GB	538865		8/1941
GB	2018837	A	10/1979
GB	1603487		11/1981
JP	H06113905		4/1994
JP	H08109553		4/1996
JP	H11302943		11/1999
NL	7304678		10/1974
TW	1228158	B	2/2005
TW	201402030	A	1/2014
TW	M498500	U	4/2015
WO	9003744		4/1990
WO	0032861		6/2000
WO	0231247		4/2002
WO	WO 2013/108506	A1	7/2013
WO	WO 2013/126313	A2	8/2013
WO	WO 2014/050289	A1	4/2014

OTHER PUBLICATIONS

Letter from Bruce Huffa dated Dec. 23, 2013 (71 Pages).
Declaration of Dr. Edward C. Frederick from the US Patent and Trademark Office Inter Partes Review of U.S. Pat. No. 7,347,011 (178 pp).
David J. Spencer, Knitting Technology: A Comprehensive Handbook and Practical Guide (Third ed., Woodhead Publishing Ltd. 2001) (413 pp).
Excerpt of Hannelore Eberle et al., Clothing Technology (Third English ed., Beuth-Verlag GmnH 2002) (book cover and back; pp. 2-3, 83).
International Search Report and Written Opinion in connection with PCT/US2009/056795 mailed on Apr. 20, 2010.
International Search Report and Written Opinion in connection with PCT/US2012/028576 mailed on Oct. 1, 2012.
International Search Report and Written Opinion in connection with PCT/US2012/028559 mailed on Oct. 19, 2012.
International Search Report and Written Opinion in connection with PCT/US2012/028534 mailed on Oct. 17, 2012.
International Preliminary Report on Patentability in connection with PCT/US2012/028534 mailed Sep. 17, 2013.
International Preliminary Report on Patentability in connection with PCT/US2012/028576 mailed Sep. 17, 2013.
International Search Report, mailed Apr. 4, 2008, issued in the International Application No. PCT/US2007/084013.
International Preliminary Report on Patentability, mailed May 22, 2009, issued in the International Application No. PCT/US2007/084013.
First Office Action with English translation for Chinese Patent Application No. 201410768401.1, dated Jan. 26, 2016, (21 pages).
International Preliminary Report on Patentability for International Application No. PCT/US2013/070651, mailed Jun. 4, 2015.
International Search Report and Written Opinion for International Application No. PCT/US2013/070651, dated Mar. 27, 2014 (14 pages).
International Search Report and Written Opinion for International Application No. PCT/US2015/015340, dated Apr. 28, 2015 (10 pages).
International Search Report and Written Opinion for International Application No. PCT/US2015/015343, dated Jun. 16, 2015 (11 pages).
International Search Report and Written Opinion for International Application No. PCT/US2015/015346, dated Apr. 22, 2015 (10 pages).
International Search Report and Written Opinion for International Application No. PCT/US2016/026345, dated Oct. 4, 2016 (20 pages).
Office Action for Chinese Application No. 2013800364497, dated Sep. 25, 2015 (6 pages).
Office Action for European Application No. 13814673.3, dated Jun. 30, 2015 (2 pages).
Office Action for Korean Application No. 10-2014-7036252, dated Jan. 21, 2016 (11 pages).
Office Action for Taiwanese Application No. 102142337, dated May 27, 2015 (36 pages).
Office Action for Taiwanese Application No. 102142337, dated Sep. 21, 2015 (33 pages).
Office Action for Taiwanese Application No. 105111914, dated Dec. 26, 2016 (19 pages).

* cited by examiner

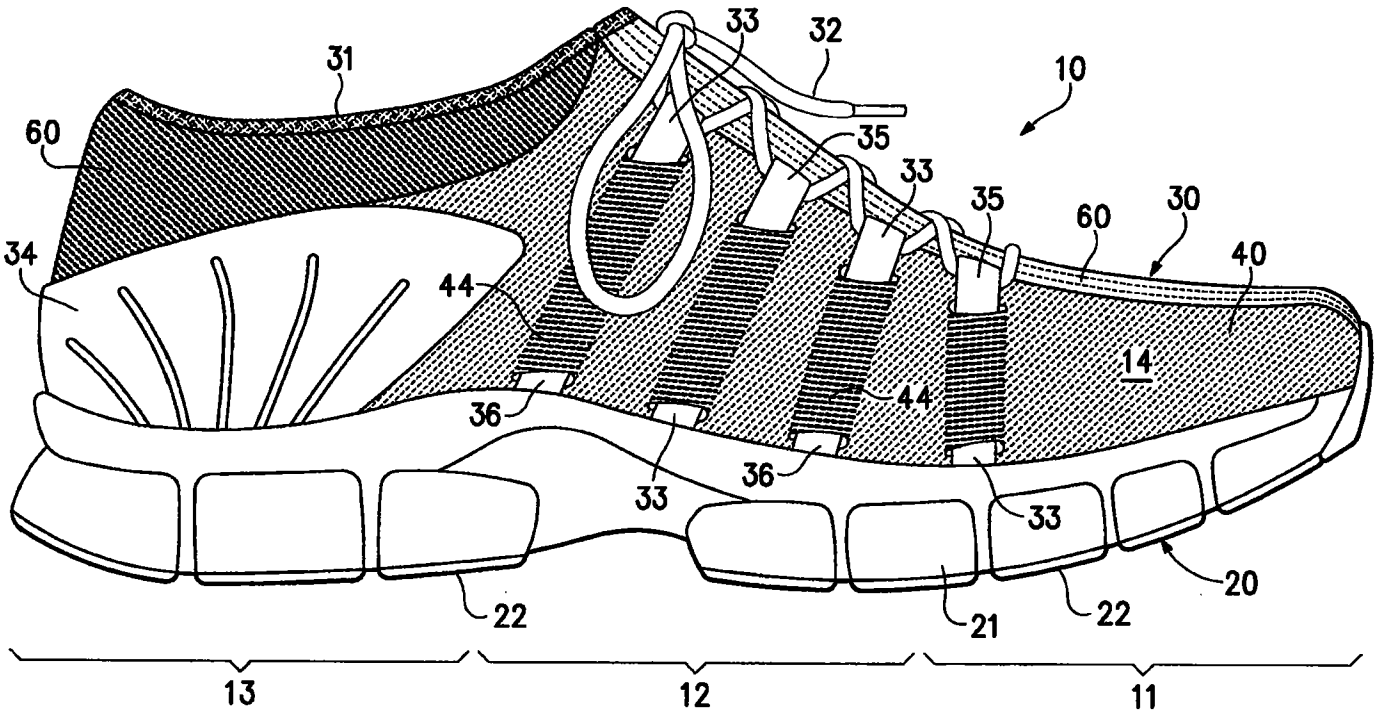
10
30
31
32
33
33
33
33
34
35
35
36
36
40
44
44
60
60
14
20
21
22
22
11
12
13

Figure 1

Skechers EX1001-5
Skechers v Nike

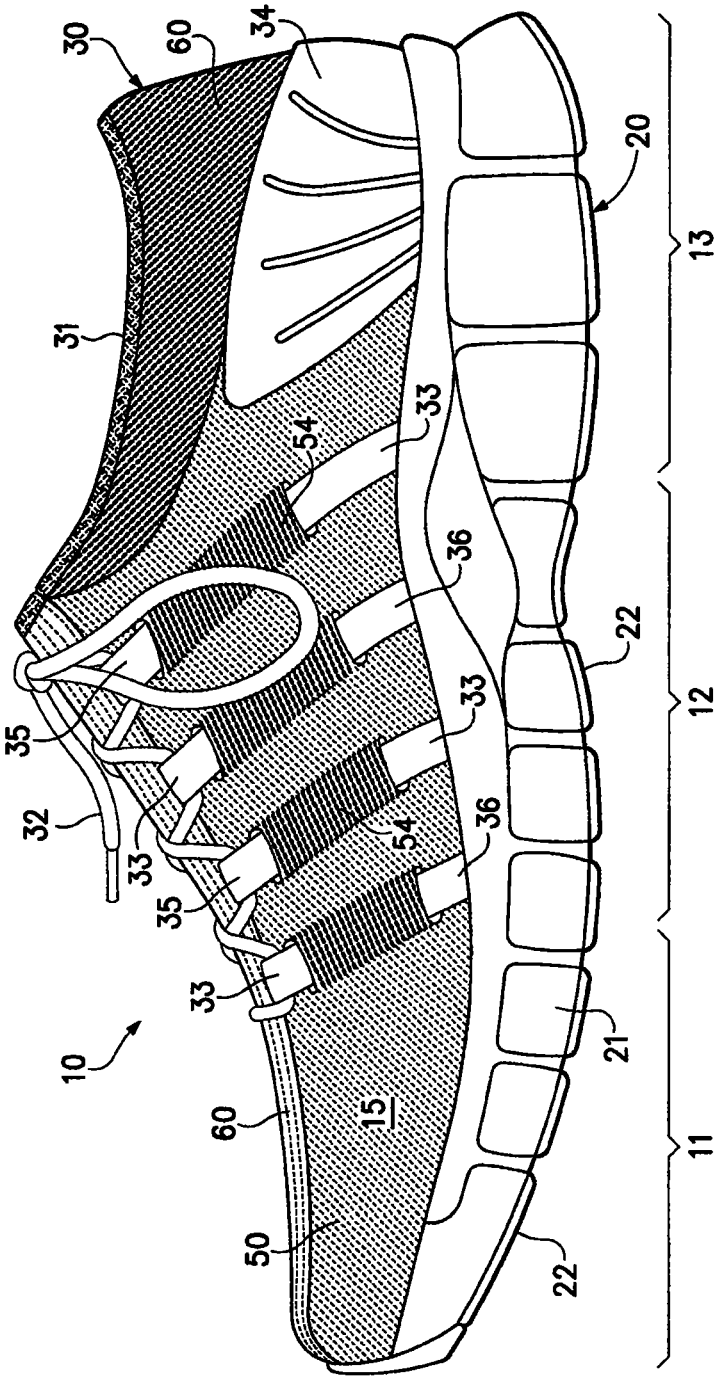

Figure 2

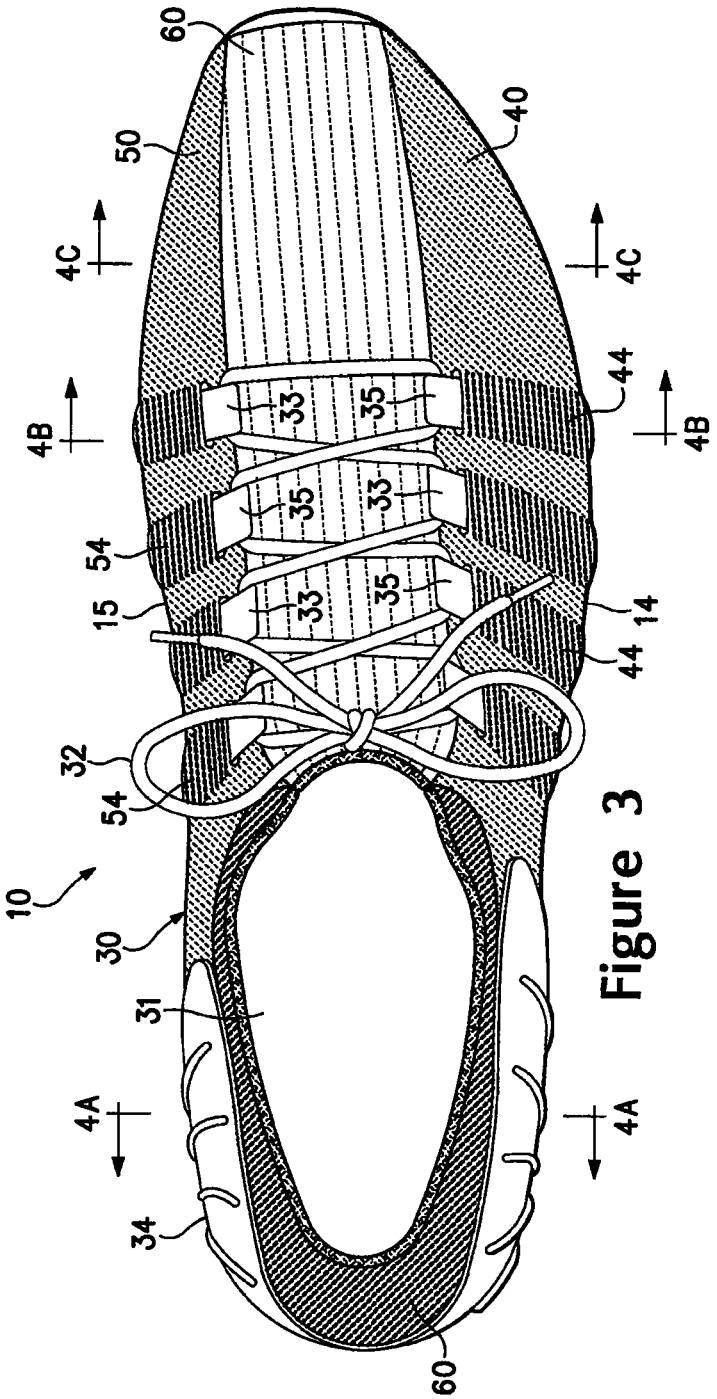
60
50
4C
4B
54
15
32
54
10
30
31
4A
34
60
40
4C
44
4B
14
44
33
35
35
33
33
35

Figure 3

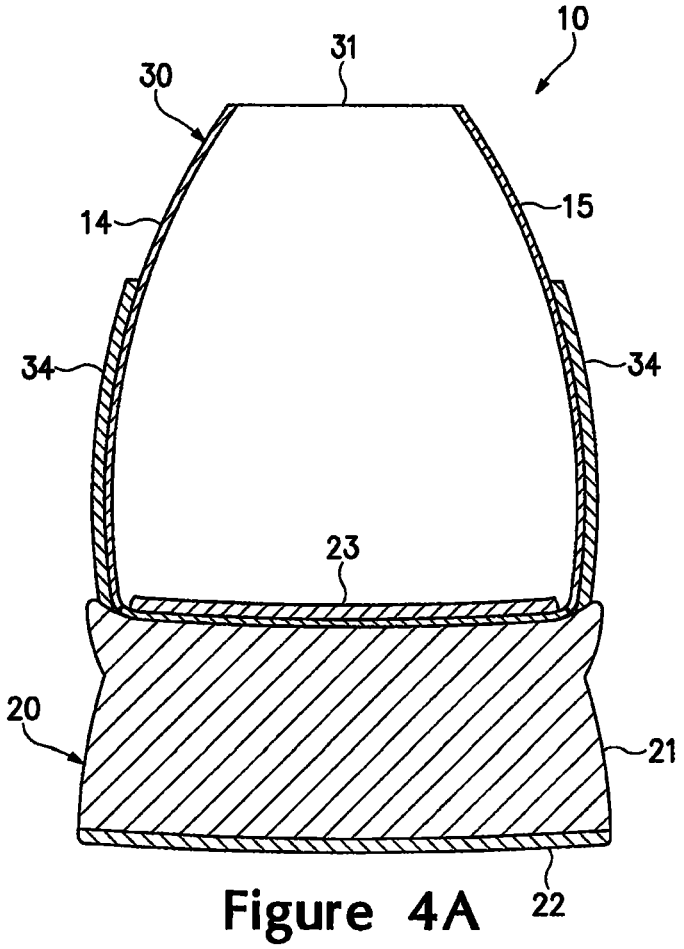

Figure 4A

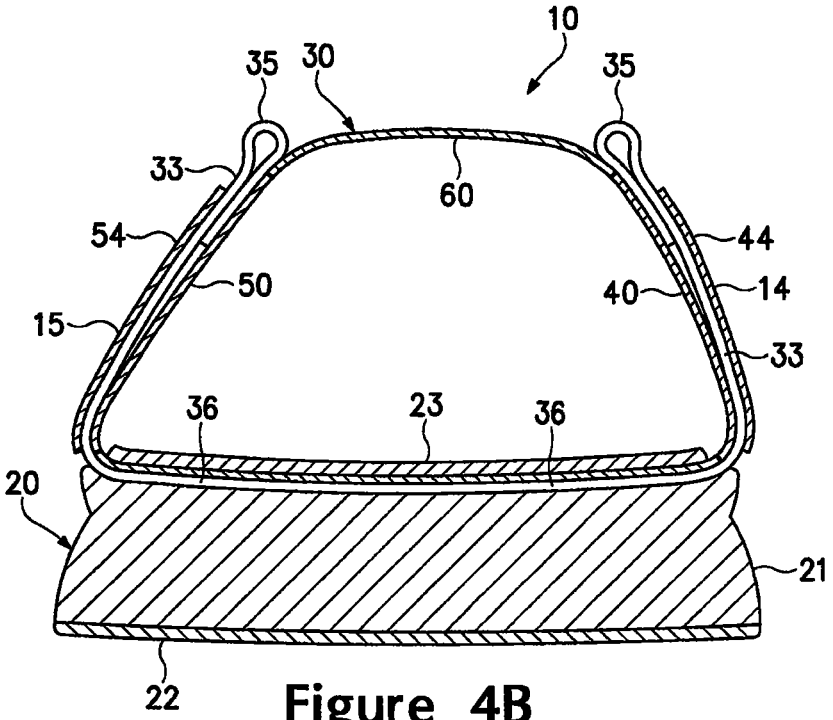

Figure 4B

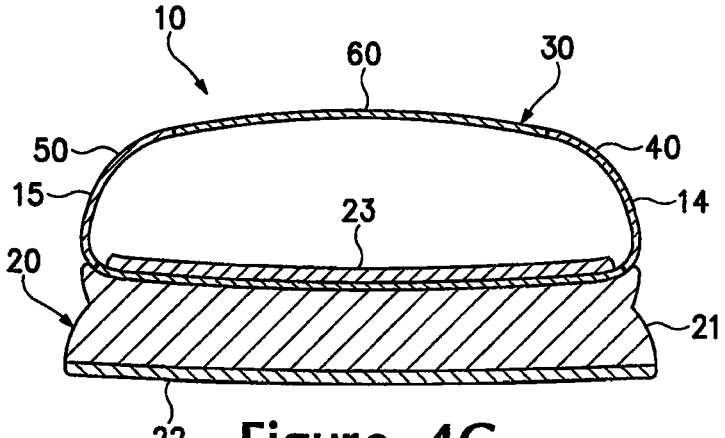

Figure 4C

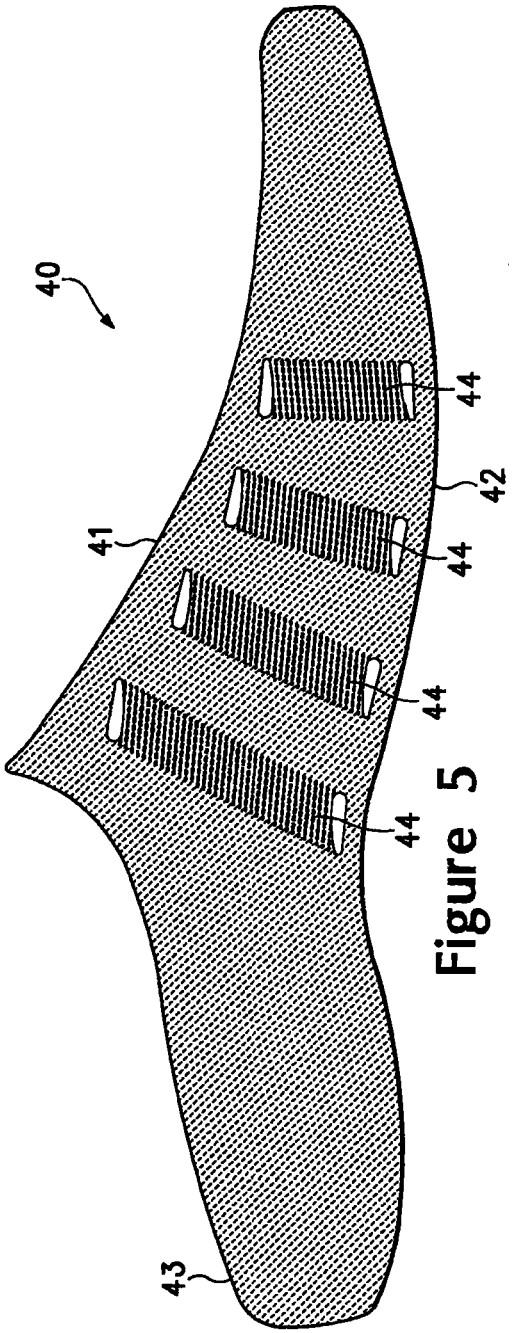

Figure 5

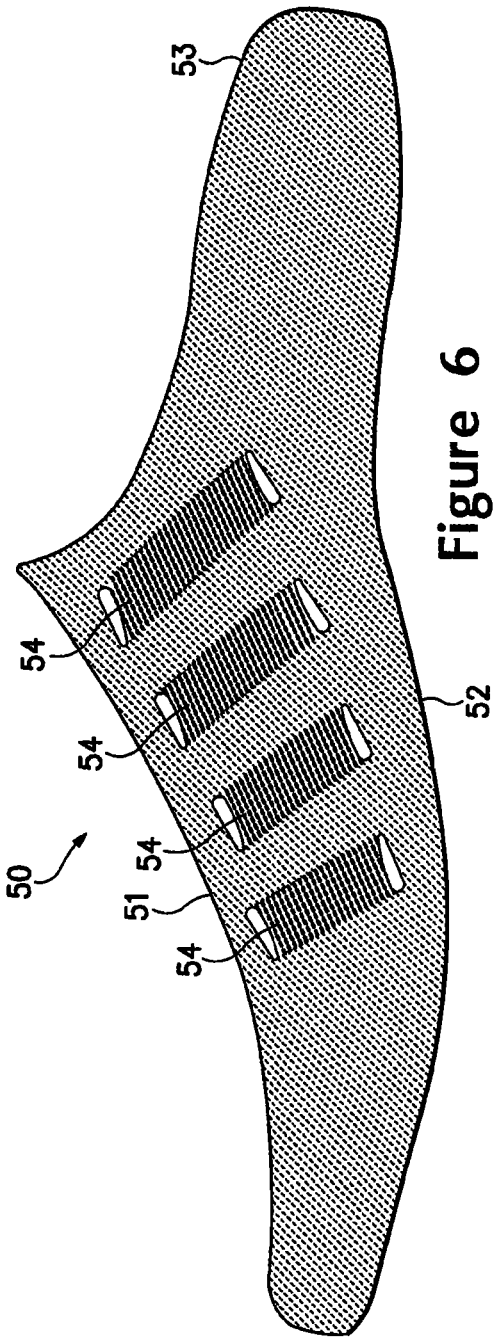

Figure 6

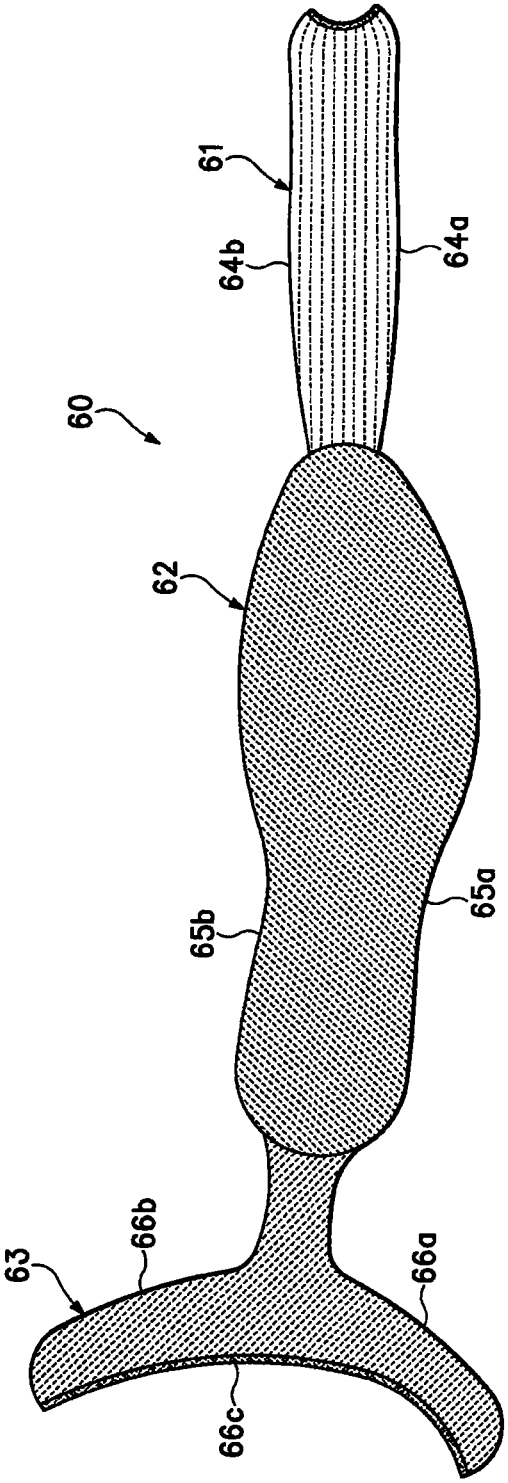

Figure 7

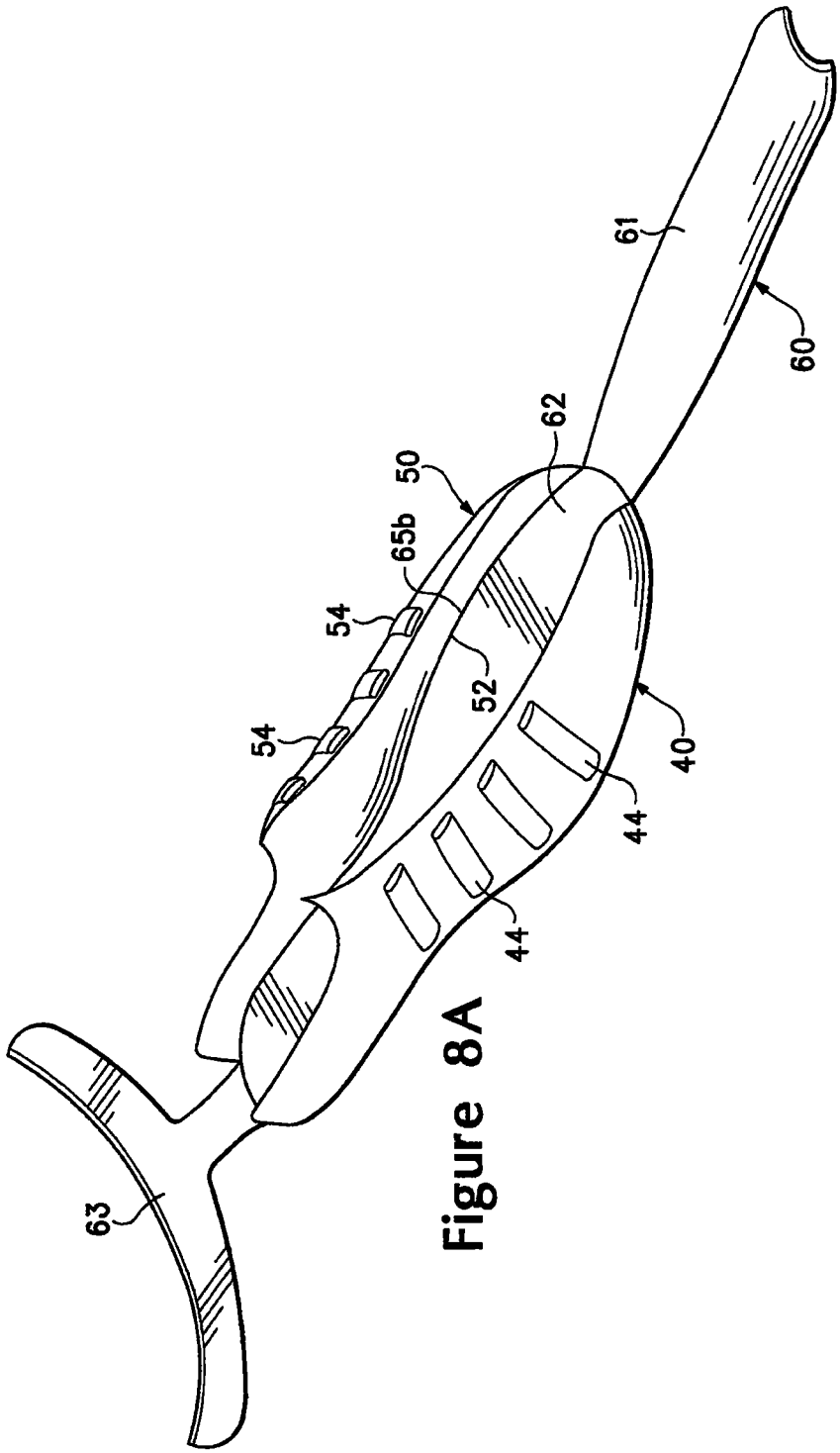

Figure 8A

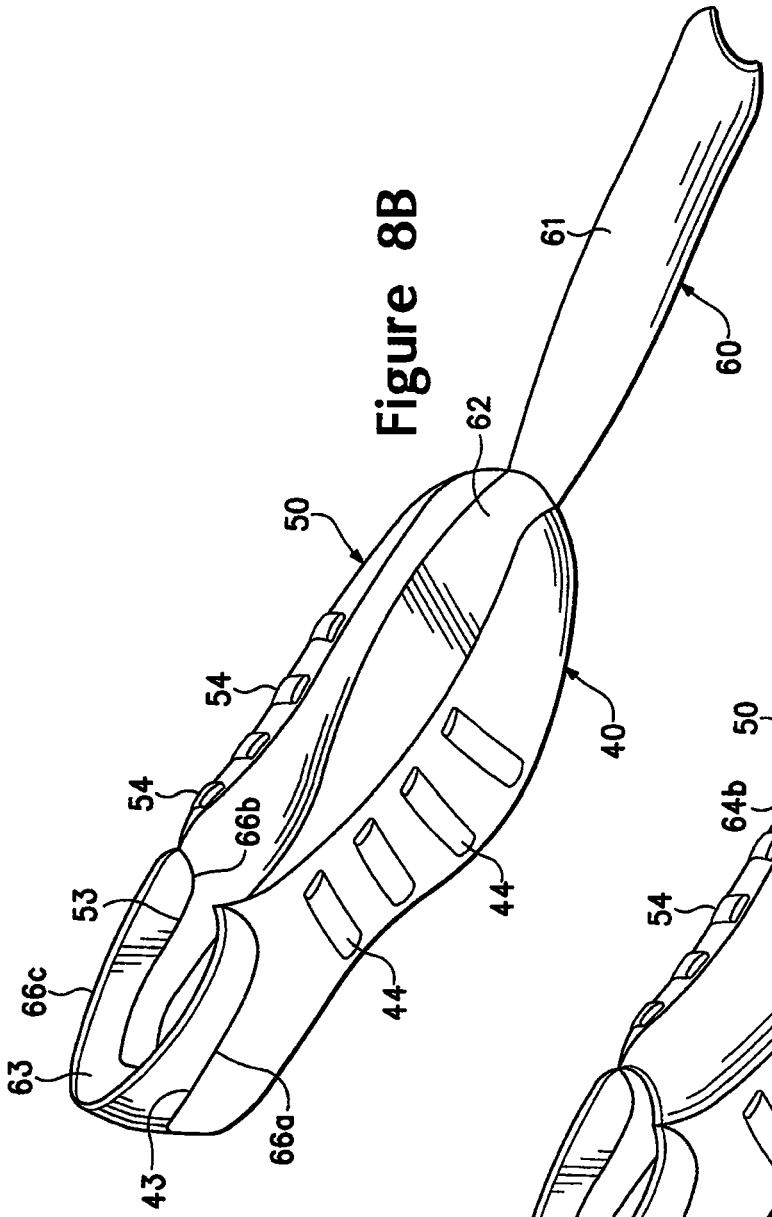

Figure 8B

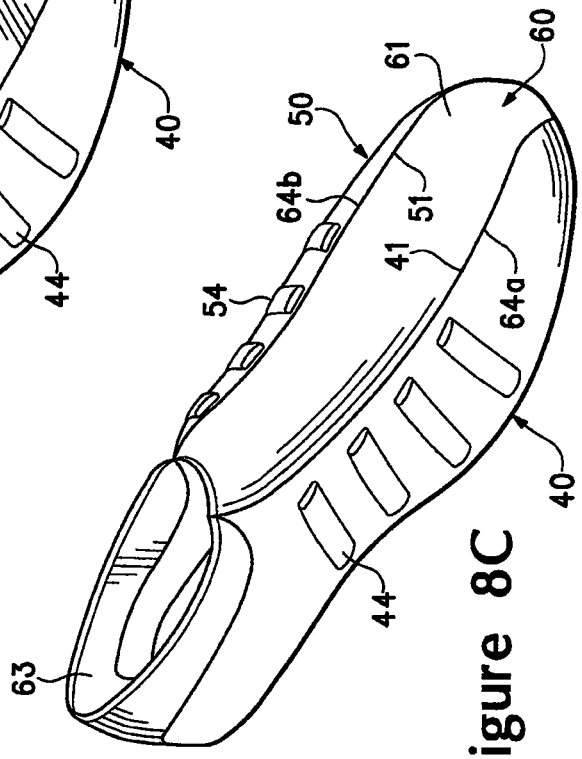

Figure 8C

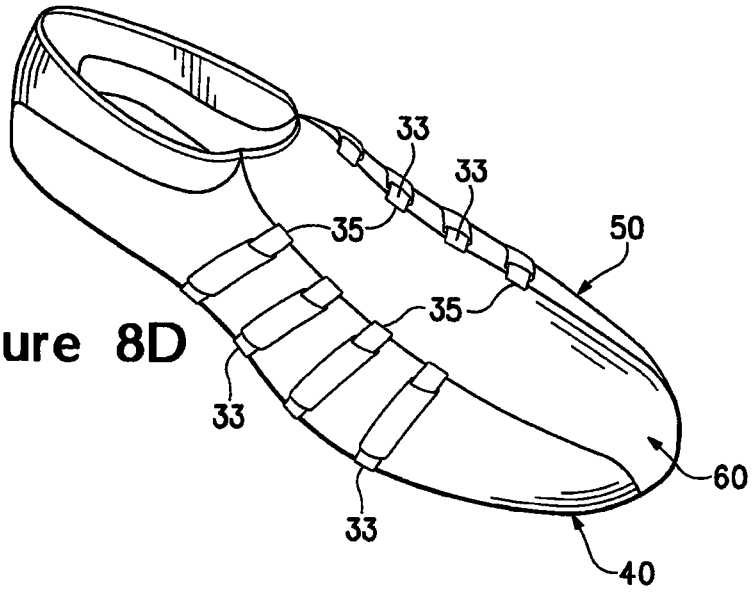

Figure 8D

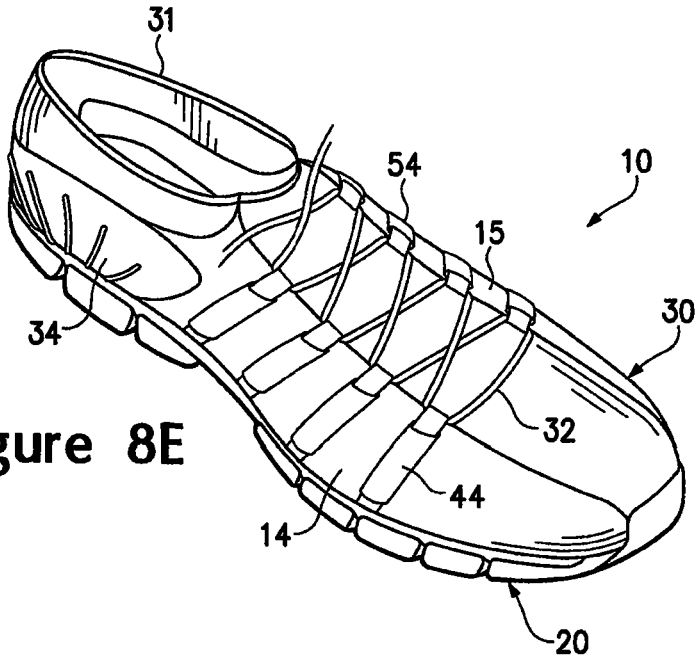

Figure 8E

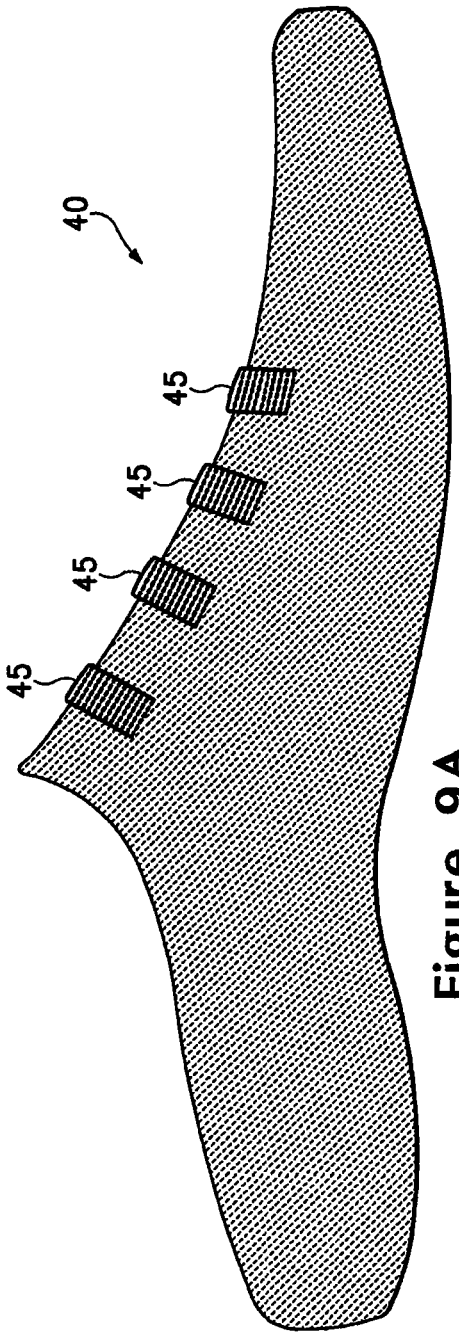

Figure 9A

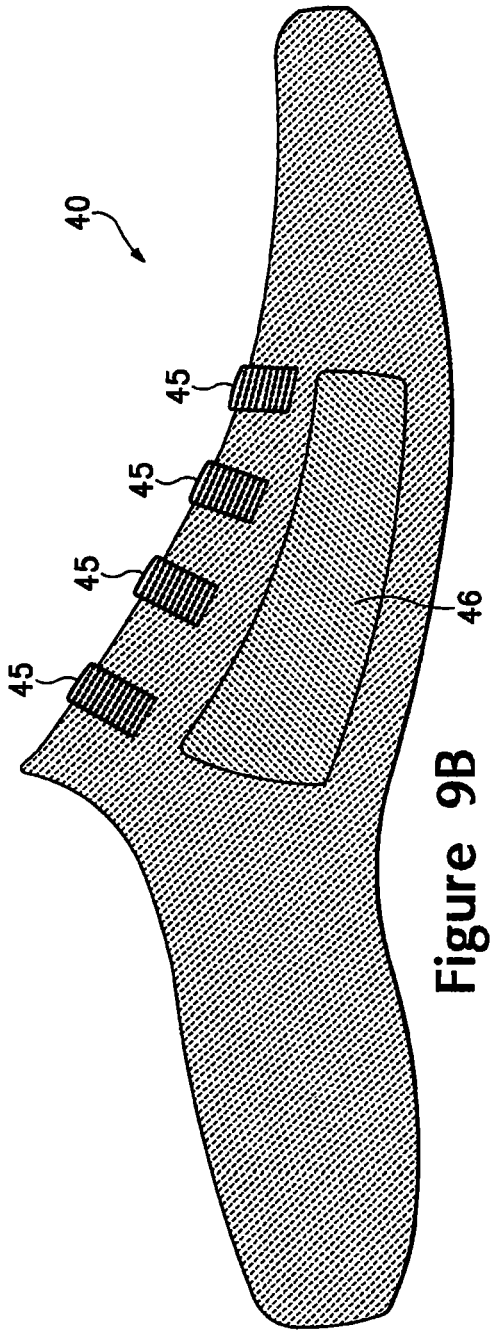

Figure 9B

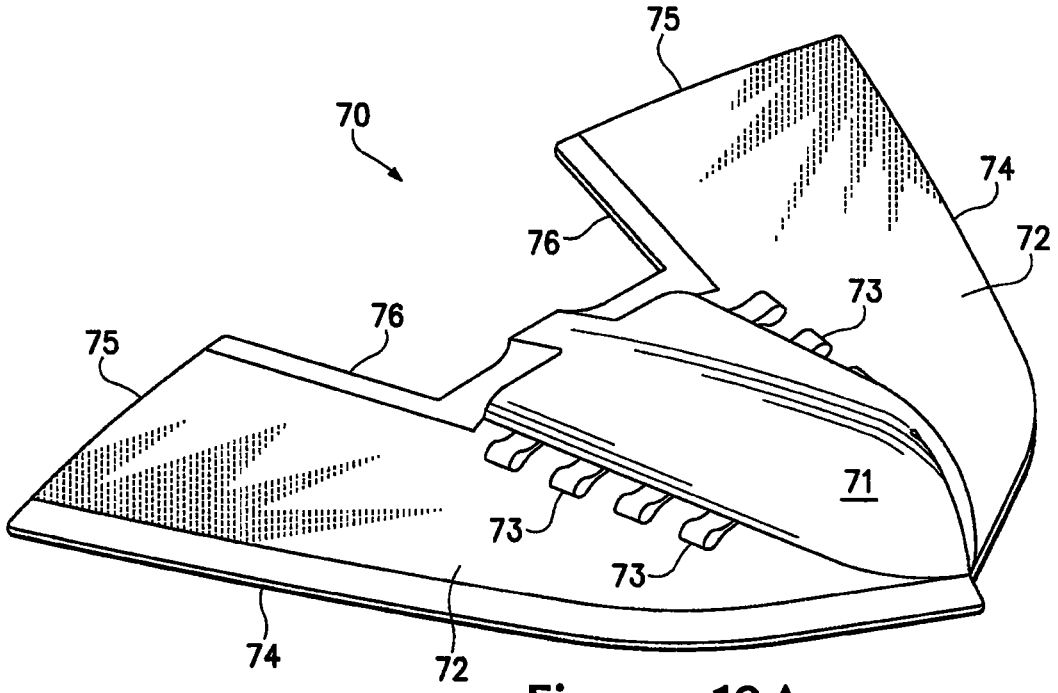

Figure 10A

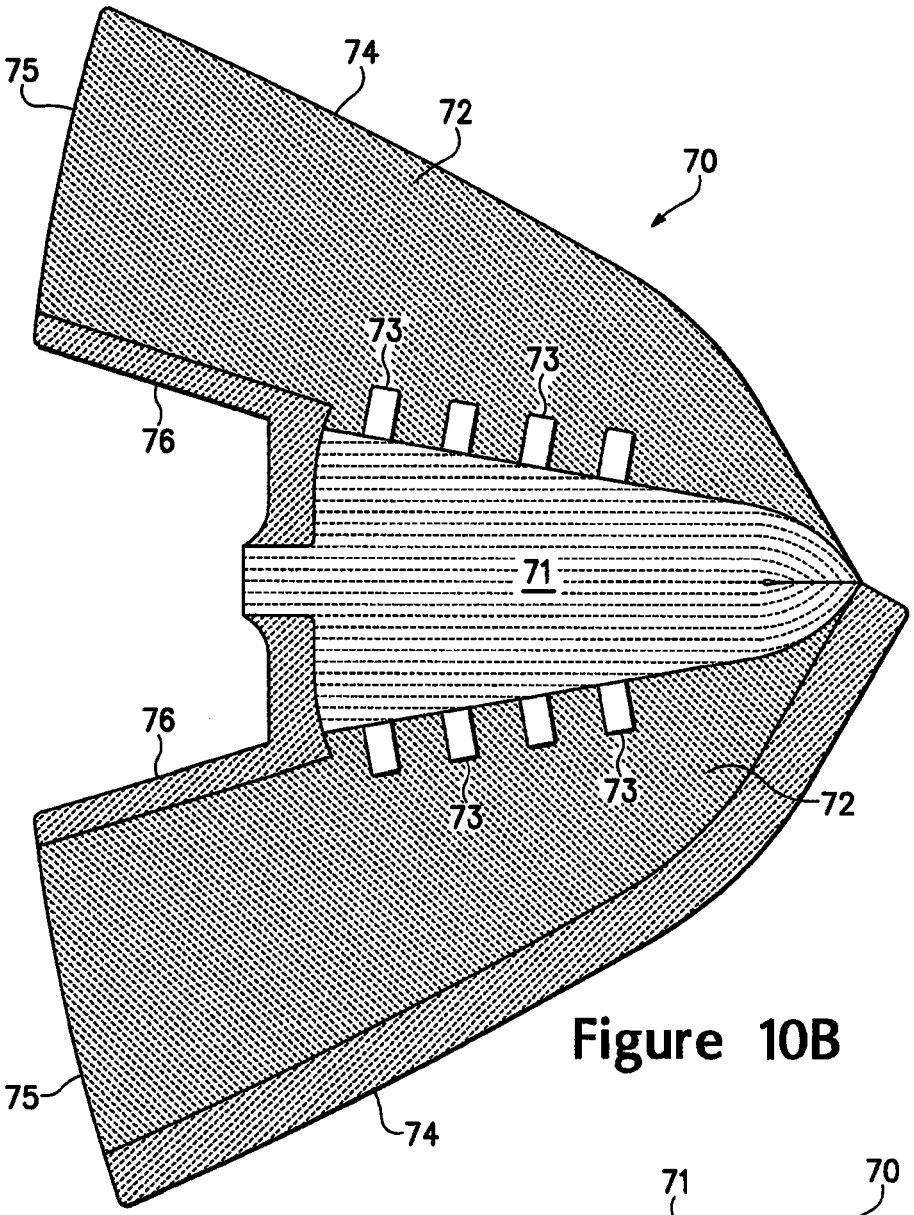

Figure 10B

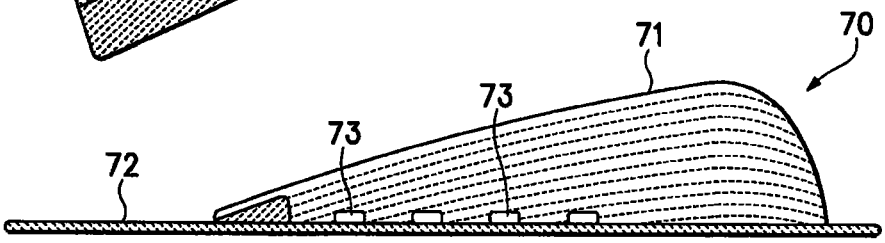

Figure 10C

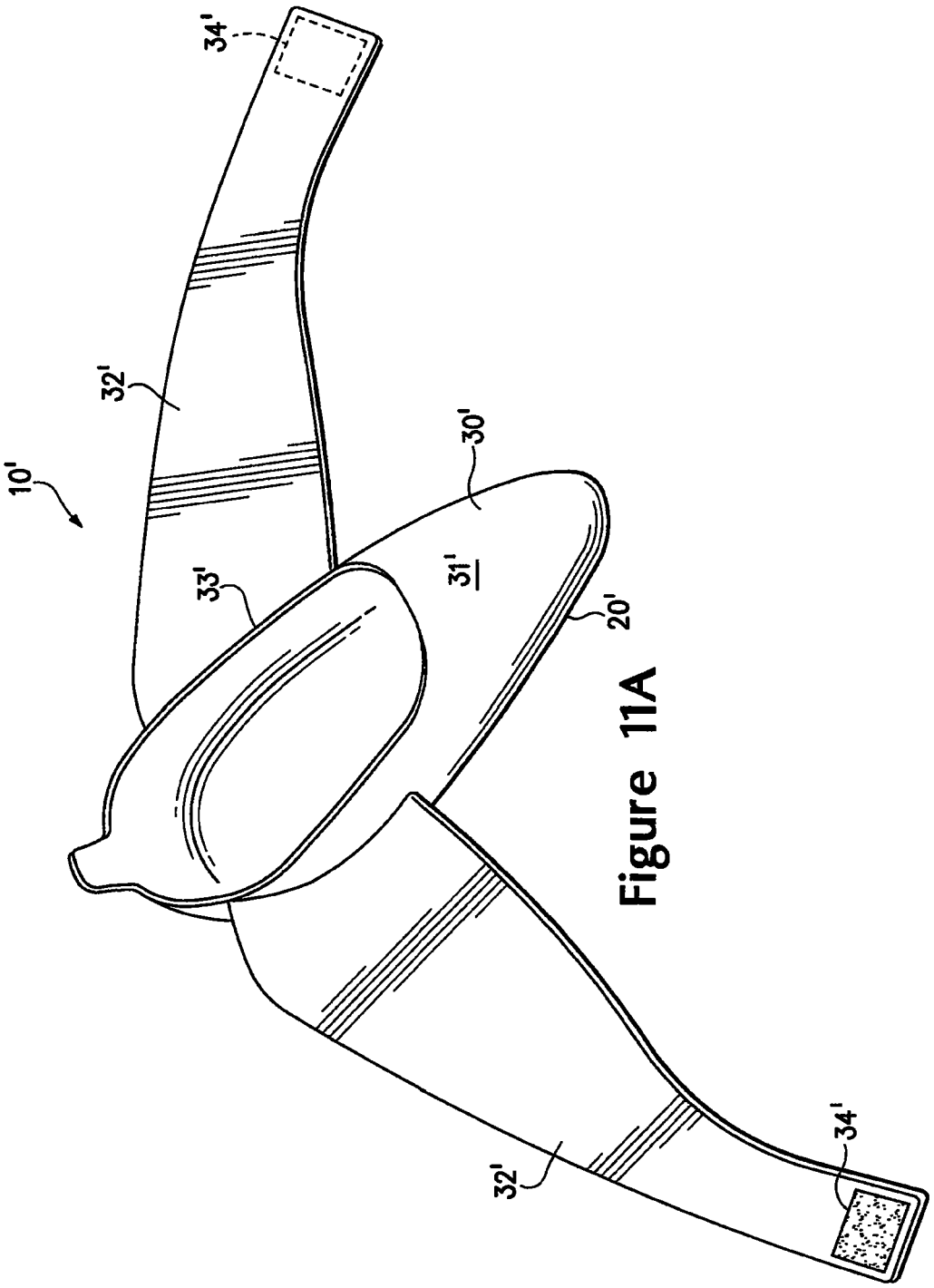

Figure 11A

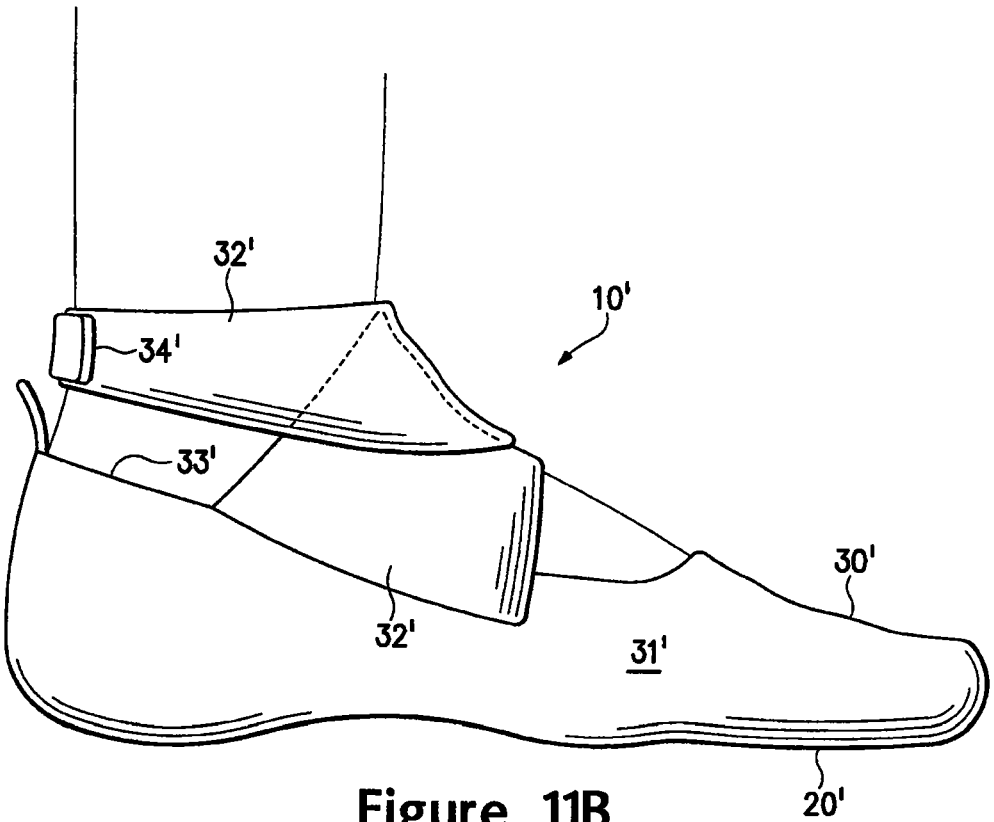

Figure 11B

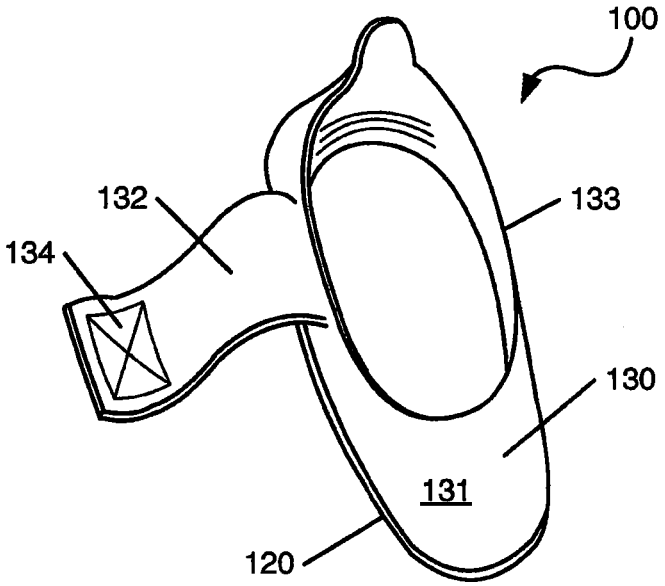

Figure 12

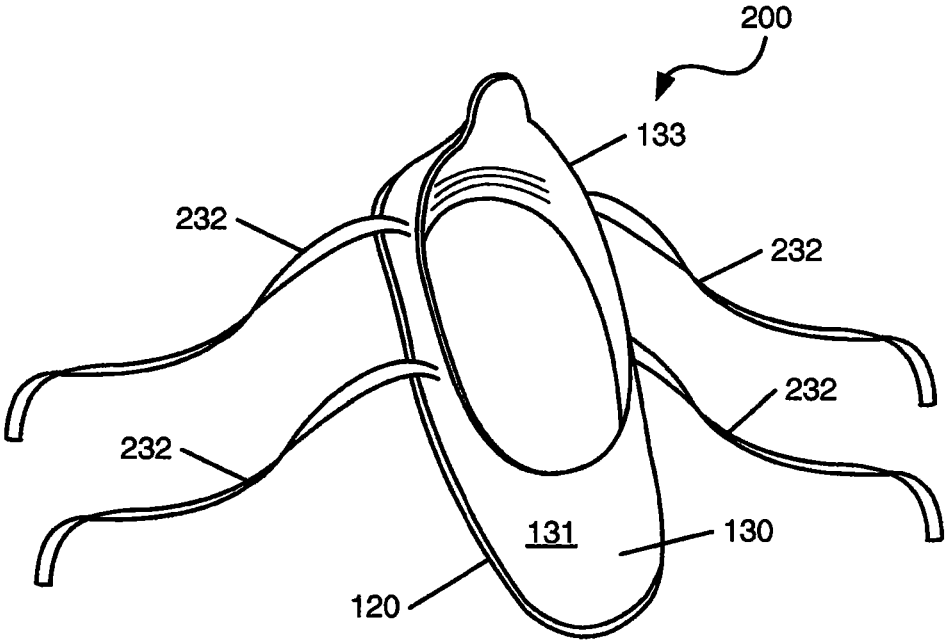

Figure 13

ARTICLE OF FOOTWEAR HAVING A FLAT KNIT UPPER CONSTRUCTION OR OTHER UPPER CONSTRUCTION

CROSS-REFERENCE TO RELATED APPLICATIONS

This application is a division of U.S. patent application Ser. No. 13/533,140, entitled "Article of Footwear Having a Flat Knit Upper Construction or Other Upper Construction", filed on Jun. 26, 2012, which application is a continuation of U.S. patent application Ser. No. 12/829,788, entitled "Article of Footwear Having a Flat Knit Upper Construction or Other Upper Construction", filed on Jul. 2, 2010, and issued as U.S. Pat. No. 8,215,132 on Jul. 10, 2012, which application is a divisional of U.S. patent application Ser. No. 11/558,499, entitled "Article of Footwear Having a Flat Knit Upper Construction or Other Upper Construction", filed on Nov. 10, 2006 and issued as U.S. Pat. No. 7,774,956 on May 15, 2008, each naming Bhupesh Dua, et al. as inventors, the disclosures of all of which applications are hereby incorporated by reference in entirety.

BACKGROUND

Conventional articles of athletic footwear include two primary elements, an upper and a sole structure. The upper provides a covering for the foot that securely receives and positions the foot with respect to the sole structure. In addition, the upper may have a configuration that protects the foot and provides ventilation, thereby cooling the foot and removing perspiration. The sole structure is secured to a lower surface of the upper and is generally positioned between the foot and the ground. In addition to attenuating ground reaction forces, the sole structure may provide traction and control foot motions, such as pronation. Accordingly, the upper and the sole structure operate cooperatively to provide a comfortable structure that is suited for a wide variety of ambulatory activities, such as walking and running The general features and configuration of the conventional upper are discussed in greater detail below.

The upper forms a void on the interior of the footwear for receiving the foot. The void has the general shape of the foot, and access to the void is provided by an ankle opening. Accordingly, the upper extends over the instep and toe areas of the foot, along the medial and lateral sides of the foot, and around the heel area of the foot. A lacing system is often incorporated into the upper to selectively increase the size of the ankle opening and permit the wearer to modify certain dimensions of the upper to accommodate feet with varying proportions. In addition, the upper may include a tongue that extends under the lacing system and a heel counter to limit movement of the heel.

The materials forming the upper may be selected based upon the properties of wear-resistance, flexibility, stretchability, and air-permeability, for example. With regard to the exterior layer, the toe area and the heel area may be formed of leather, synthetic leather, or a rubber material to impart a relatively high degree of wear-resistance. Leather, synthetic leather, and rubber materials, however, may not exhibit the desired degree of flexibility and air-permeability. Accordingly, various other areas of the exterior layer of the upper may be formed from a synthetic or natural textile material. The exterior layer of the upper may be formed, therefore, from numerous material elements that each impart different properties to specific portions of the upper.

The intermediate layer of the upper may be formed from a lightweight polymer foam material that provides cushioning. Similarly, the interior layer of the upper may be formed of a moisture-wicking textile that removes perspiration from the area immediately surrounding the foot. In some articles of athletic footwear, the various layers may be joined with an adhesive, and stitching may be utilized to join elements within a single layer or to reinforce specific areas of the upper.

Although the materials selected for the upper vary significantly, textile materials often form at least a portion of the exterior layer and interior layer. A textile may be defined as a structure manufactured from fibers, filaments, or yarns characterized by flexibility, fineness, and a high ratio of length to thickness. Textiles generally fall into two categories. The first category includes textiles produced directly from webs of filaments or fibers by randomly interlocking to construct non-woven fabrics and felts. The second category includes textiles formed through a mechanical manipulation of yarn (e.g., by interlacing or interlooping), thereby producing a woven fabric or a knit fabric, for example.

Yarn is the raw material utilized to form textiles in the second category. In general, yarn is defined as an assembly having a substantial length and relatively small cross-section that is formed of at least one filament or a plurality of fibers. Fibers have a relatively short length and require spinning or twisting processes to produce a yarn of suitable length for use in textiles. Common examples of fibers are cotton and wool. Filaments, however, have an indefinite length and may merely be combined with other filaments to produce a yarn suitable for use in textiles. Modern filaments include a plurality of synthetic materials such as rayon, nylon, polyester, and polyacrylic, with silk being the primary, naturally-occurring exception. Yarn may be formed of a single filament, which is conventionally referred to as a "monofilament yarn," or a plurality of individual filaments grouped together. Yarn may also include separate filaments formed of different materials, or the yarn may include filaments that are each formed of two or more different materials. Similar concepts also apply to yarns formed from fibers. Accordingly, yarns may have a variety of configurations that generally conform to the definition provided above.

The various techniques for mechanically manipulating yarn into a textile include interweaving, intertwining and twisting, and interlooping. Interweaving is the intersection of two yarns that cross and interweave at right angles to each other. The yarns utilized in interweaving are conventionally referred to as "warp" and "weft." Intertwining and twisting encompasses procedures such as braiding and knotting where yarns intertwine with each other to form a textile. Interlooping involves the formation of a plurality of columns of intermeshed loops, with knitting being the most common method of interlooping.

The textiles utilized in footwear uppers generally provide a lightweight, air-permeable structure that is flexible and comfortably receives the foot. In order to impart other properties to the footwear, including durability and stretch-resistance, additional materials are commonly combined with the textile, including leather, synthetic leather, or rubber, for example. With regard to durability, U.S. Pat. No. 4,447,967 to Zaino discloses an upper formed of a textile material that has a polymer material injected into specific zones to reinforce the zones against abrasion or other forms of wear. Regarding stretch resistance, U.S. Pat. No. 4,813,158 to Brown and U.S. Pat. No. 4,756,098 to Boggia both disclose a substantially inextensible material that is secured

to the upper, thereby limiting the degree of stretch in specific portions of the upper. U.S. Patent Publication No. 2006-0048413 describes, inter alia, a rubber/foam web sandwiched between two textile structures to provide support, and this structure also allows for regional breathability, stretchability, and durability.

SUMMARY

One example structure according to this invention relates to an article of footwear having an upper and a sole structure secured to the upper. The upper includes a knitted element formed from at least one mechanically manipulated yarn. The knitted element of this example structure has an area with a first layer and a coextensive second layer. The first layer is formed as a unitary construction with the second layer, and the second layer is joined to the first layer at opposite sides of the second layer.

Another example aspect of the invention relates to a method of manufacturing an article of footwear. The method includes steps of flat knitting a textile element and incorporating the textile element into the article of footwear. The step of flat knitting may include forming an area of the textile element with a first layer and a coextensive second layer. The two layers may be utilized to form a channel, for example. In some configurations, the step of flat knitting may include forming a first area and a second area, with one or both of a stitch type and a yarn type of the first area being different than a stitch type and a yarn type of the second area.

Yet another example structure according to this invention relates to an article of footwear having a knitted element that includes a foot-receiving portion and one or more straps formed of unitary construction with the foot-receiving portion. The foot-receiving portion defines a void for receiving the foot, and the strap or straps extend outward from one or more sides of the foot-receiving portion.

The advantages and features of novelty characterizing various aspects of the invention are pointed out with particularity in the appended claims. To gain an improved understanding of the advantages and features of novelty, however, reference may be made to the following descriptive matter and accompanying drawings that describe and illustrate various embodiments and concepts related to the aspects of the invention.

DESCRIPTION OF THE DRAWINGS

FIG. **1** is a lateral side elevational view of an article of footwear having a first upper in accordance with the invention.

FIG. **2** is a medial side elevational view of the article of footwear.

FIG. **3** is top plan view of the article of footwear.

FIGS. **4**A-**4**C are cross-sectional views of the article of footwear, as defined by section lines **4**A-**4**C in FIG. **3**.

FIG. **5** is a plan view of a lateral textile element of the first upper.

FIG. **6** is a plan view of a medial textile element of the first upper.

FIG. **7** is a plan view of a central textile element of the first upper.

FIG. **8**A is a perspective view depicting a first step in assembling the article of footwear.

FIG. **8**B is a perspective view depicting a second step in assembling the article of footwear.

FIG. **8**C is a perspective view depicting a third step in assembling the article of footwear.

FIG. **8**D is a perspective view depicting a fourth step in assembling the article of footwear.

FIG. **8**E is a perspective view depicting a fifth step in assembling the article of footwear.

FIG. **9**A is a plan view of another configuration for the lateral textile element.

FIG. **9**B is a plan view of yet another configuration for the lateral textile element.

FIG. **10**A is a perspective view of a textile element of a second upper in accordance with the invention.

FIG. **10**B is a top plan view of the textile element of the second upper.

FIG. **10**C is a side elevational view of the textile element of the second upper.

FIG. **11**A is a perspective view of an article of footwear having a third upper in accordance with the invention.

FIG. **11**B is a side elevational view of the third upper in combination with a foot.

FIG. **12** is a perspective view of an article of footwear having another upper configuration in accordance with this invention.

FIG. **13** is a perspective view of an article of footwear having yet another upper configuration in accordance with this invention.

DETAILED DESCRIPTION

The following discussion and accompanying figures disclose various uppers for articles of footwear, the uppers (or at least portions thereof) being at least partially formed from a material produced through a flat knitting process. The uppers are disclosed in combination with footwear suitable for activities that include running and yoga. Concepts associated with the footwear and the uppers are not limited solely to footwear designed for running and yoga, but they may be applied to a wide range of athletic footwear styles, including baseball shoes, basketball shoes, cross-training shoes, cycling shoes, football shoes, tennis shoes, soccer shoes, walking shoes, and hiking boots, for example. The concepts also may be applied to footwear styles that are generally considered to be non-athletic, including dress shoes, loafers, sandals, and work boots. The concepts disclosed herein apply, therefore, to a wide variety of footwear styles. Also, aspects of this invention may be used in conjunction with other portions of a footwear structure, such as a layer within an upper member structure, an interior lining for a footwear product (such as a sock liner), a bootie member (optionally for inclusion in a footwear structure), etc.

Flat knitting, when used in example structures according to this invention, can provide various advantages. For example, flat knitting can be used to provide textile structures for use in footwear uppers of a final desired shape such that textile cutting steps can be avoided (which eliminates waste, avoids the need to finish cut edges, saves time, saves money, etc.). Flat knitted elements also can be formed directly in desired three dimensional shapes, which can help avoid the need to use additional support structures in the overall footwear construction (which also saves time, money, etc.; produces a lighter and/or more flexible product; may eliminate seams and at least some sewing, etc.; etc.). By selectively placing multiple different yarns and/or stitch patterns at multiple different locations in the overall structure during the knitting process, flat knitted products may have multiple different physical properties (e.g., different stretchability, different moisture management capabilities, etc.) at multiple different locations or zones within a single, unitary construction (e.g., different properties at different

zones or locations within a single footwear structure). Additionally, flat knitting can be used to produce pockets, tunnels, or other layered structures in the final product. These and other features, aspects, and advantages of structures and methods in accordance with examples of this invention will be described in more detail below in conjunction with the various example structures illustrated in FIGS. **1-13**.

General Footwear Structure

An article of footwear **10** is depicted in FIGS. **1-4**C as including a sole structure **20** and an upper **30**. For reference purposes, footwear **10** may be divided into three general regions: a forefoot region **11**, a midfoot region **12**, and a heel region **13**, as shown in FIGS. **1** and **2**. Footwear **10** also includes a lateral side **14** and a medial side **15**. Forefoot region **11** generally includes portions of footwear **10** corresponding with the toes and the joints connecting the metatarsals with the phalanges. Midfoot region **12** generally includes portions of footwear **10** corresponding with the arch area of the foot, and heel region **13** corresponds with rear portions of the foot, including the calcaneus bone. Lateral side **14** and medial side **15** extend through each of regions **11-13** and correspond with opposite sides of footwear **10**. Regions **11-13** and sides **14-15** are not intended to demarcate precise areas of footwear **10**. Rather, regions **11-13** and sides **14-15** are intended to represent general areas of footwear **10** to aid in the following discussion. In addition to footwear **10**, regions **11-13** and sides **14-15** may also be applied to sole structure **20**, upper **30**, and individual elements thereof.

Sole structure **20** is secured to upper **30** and extends between the foot and the ground when footwear **10** is worn. In addition to providing traction, sole structure **20** may attenuate ground reaction forces when compressed between the foot and the ground during walking, running, or other ambulatory activities. As depicted in the figures, one suitable configuration for sole structure **20** includes a midsole **21**, an outsole **22**, and an insole **23**. Midsole **21** is secured to a lower surface of upper **30** and is primarily formed from a polymer foam element (e.g., a polyurethane or ethylvinylacetate foam, phylon, phylite, etc.) that imparts the ground reaction force attenuation properties to sole structure **20**. Midsole **21** may incorporate a fluid-filled bladder that supplements the ground reaction force attenuation properties. Outsole **22** is secured to a lower surface of midsole **21** and may be formed from textured rubber or other materials that impart a relatively high degree of wear resistance and/or traction properties. Insole **23** is located within upper **30** and is positioned to extend under a lower surface of the foot. Although this configuration for sole structure **20** provides a suitable example for a sole structure that may be used in connection with upper **30**, a variety of other conventional or nonconventional configurations for sole structure **20** may also be utilized without departing from this invention.

Upper **30** defines a void within footwear **10** for receiving and securing the foot relative to sole structure **20**. More particularly, the void is shaped to accommodate a foot and extends along the lateral side of the foot, along the medial side of the foot, over the foot, and under the foot. Access to the void is provided by an ankle opening **31** located in at least heel region **13**. A lace **32** extends through various lace elements **33** and permits the wearer to modify dimensions of upper **30**, thereby accommodating feet with varying proportions. Lace **32** also permits the wearer to loosen upper **30** and facilitate removal of the foot from the void. Lace elements **33** in this example footwear structure **10** are formed from a flexible material, and each has a pair of loops **35** formed on opposite ends of a central section **36**, with loops **35** having a configuration that receives lace **32**. In addition, upper **30** includes a heel counter **34** that extends around heel region **13** and limits movement of the heel. A wide variety of other lace engaging elements and/or other footwear securing systems may be provided, if desired.

Textile Elements

The void in this example footwear structure **10** is primarily defined by a lateral textile element **40**, a medial textile element **50**, and a central textile element **60**. Lateral textile element **40** forms portions of upper **30** corresponding with lateral side **14**. Medial textile element **50** forms portions of upper **30** corresponding with medial side **15**. In addition, central textile element **60** forms portions of upper **30** extending under the foot, over forward portions of the foot, and around the heel of the foot. Textile elements **40**, **50**, and **60** extend around the foot and are the primary elements of footwear **10** that make contact with the foot or a sock worn over the foot. In general, and as described in greater detail below, upper **30** is substantially assembled by joining edges of textile elements **40**, **50**, and **60** to impart a general shape of the void. In addition, assembling upper **30** in this example structure **10** involves incorporating lace **32**, lace elements **33**, and heel counter **34** into footwear **10**.

Textile elements **40**, **50**, and **60** are depicted as forming portions of both an exterior surface and an opposite interior surface of footwear **10**. In further configurations, textile elements **40**, **50**, and **60** may form only the exterior surface or only the interior surface (e.g., as an interior liner or bootie for the footwear structure). Textile elements **40**, **50**, and **60** may also be located between other footwear elements so as to form non-visible or non-exposed portions of footwear **10**. In addition, textile elements **40**, **50**, and **60** are depicted as extending through each of regions **11-13**, but they may be limited to a smaller portion of footwear **10**.

Lateral textile element **40** is depicted individually in FIG. **5** and is formed of unitary (i.e., one-piece) construction through a flat knitting process. That is, a flat knitting process is utilized to mechanically manipulate one or more yarns in a manner that forms an upper edge **41**, a lower edge **42**, a rear edge **43**, and four channels **44** in lateral textile element **40**. As depicted in the cross-section of FIG. **4**B, channels **44** are formed from two at least partially coextensive layers of the material forming lateral textile element **40**, and the two layers are formed of unitary (i.e., one piece) construction through the flat knitting process. When viewed from the side of footwear **10**, as in FIG. **1**, channels **44** are oriented in a substantially vertical direction or are angled with respect to a vertical direction.

Medial textile element **50** is depicted individually in FIG. **6** and is similar in shape and configuration to lateral textile element **40**. Accordingly, medial textile element **50** is formed of unitary (i.e., one-piece) construction through a flat knitting process. That is, a flat knitting process is utilized to mechanically manipulate one or more yarns in a manner that forms an upper edge **51**, a lower edge **52**, a rear edge **53**, and four channels **54** in medial textile element **50**. As depicted in the cross-section of FIG. **4**B, channels **54** are formed from two at least partially coextensive layers of the material forming medial textile element **50**, and the two layers are formed of unitary (i.e., one piece) construction through the flat knitting process. When viewed from the side of footwear **10**, as in FIG. **2**, channels **54** are oriented in a substantially vertical direction or are angled with respect to the vertical direction. Channels **54** are, therefore, similar in configuration and orientation to channels **44** of lateral textile element **40**.

Central textile element **60** is depicted individually in FIG. **7** and includes a forward portion **61**, a center portion **62**, and a rearward portion **63** formed of unitary (i.e., one piece) construction. Forward portion **61** is primarily located in a throat area of footwear **10** (i.e., under lace **32**) and has an elongate configuration defined by a lateral edge **64***a* and a medial edge **64***b*. As depicted in FIG. **3**, and as described in greater detail below, at least a portion of lateral edge **64***a* is joined to lateral textile element **40** and at least a portion of medial edge **64***b* is joined to medial textile element **50**. Center portion **62** is primarily located adjacent sole structure **20** (i.e., in an area extending under the foot) to form a lower portion of the void within upper **30**. Center portion **62** has a shape that approximates a shape of the foot and is defined by a lateral edge **65***a* and a medial edge **65***b*. As described in greater detail below, lateral edge **65***a* is joined to lateral textile element **40** and medial edge **65***b* is joined to medial textile element **50**. Rearward portion **63** is primarily located in heel region **13** and has a generally Y-shaped configuration defined by a lateral edge **66***a*, a medial edge **66***b*, and an ankle edge **66***c*. As described in greater detail below, lateral edge **66***a* is joined to lateral textile element **40**, medial edge **66***b* is joined to medial textile element **50**, and ankle edge **66***c* forms a portion of an upper edge of ankle opening **31**.

Flat Knitting and Yarn

Each of textile elements **40**, **50**, and **60** may be formed through a flat knitting process. In general, flat knitting is a method for producing knitted material in which the material is turned periodically (i.e., the material is knitted from alternating sides). The two sides (otherwise referred to as "faces") of the material are conventionally designated as the "right side" (i.e., the side that faces outwards, towards the viewer) and the "wrong side" (i.e., the side that faces inwards, away from the viewer). Flat knitting may be contrasted with circular knitting, in which the fabric is always knitted from the same side. Various circular knitting techniques are known, for example, narrow tube circular knitting and wide tube circular knitting. More specific examples of circular knitting techniques are described in U.S. Published Patent Publication No. 2005/0193592, which publication is entirely incorporated herein by reference. In contrast with circular knitting, flat knitting may be more complicated because the same stitch (as seen from the right side) is produced by two different movements when knitted from the right and wrong sides. Accordingly, a knit stitch (as seen from the right side) may be produced by a knit stitch on the right side or by a purl stitch on the wrong side. In flat knitting, the fabric is usually turned after every row. Although flat knitting provides a suitable manner for forming textile elements **40**, **50**, and **60**, other types of knitting may also be utilized, including wide tube circular knitting, narrow tube circular knit jacquard, single knit circular knit jacquard, double knit circular knit jacquard, and warp knit jacquard, for example.

An advantage of flat knitting over various other types of knitting is that the flat knitting process may be utilized to form generally three-dimensional structures or structures wherein layers of material overlap each other (i.e., are at least partially coextensive) to form loops or other overlapping configurations, as with channels **44** and **54**. More particularly, the flat knitting process may make structures wherein layers are joined to each other such that opposite sides of one layer are formed of unitary construction with the other layer, as with channels **44** and **54**. In addition, flat knitting may be utilized to form areas with different types of stitches and areas with different types of yarns. For example, forward portion **61** of central element **60** is depicted as having a ribbed configuration that stretches to a different degree than the non-ribbed configurations of center portion **62** and rearward portion **63**. Moreover, textile elements **40** and **50** may be formed from a less stretchable type of stitch than forward portion **61**, and the yarn selected for textile elements **40** and **50** may be more wear-resistant than the yarn selected for forward portion **61**. As another example, the knit/yarn combination utilized for rearward portion **63** may be selected to impart stretch and recovery to ankle opening **31**. Accordingly, the flat knitting process may be utilized to form a generally three-dimensional or overlapping structure having areas with different properties that are produced from combinations of different types of stitches and different types of yarns.

The flat knitting process may also be utilized to form elements with defined shapes that do not need to be cut from a larger textile element. For example, each of textile elements **40**, **50**, and **60** may be knitted to have the respective shapes depicted in FIGS. **5-7** without cutting textile elements **40**, **50**, and **60** from larger textile elements. Unlike textile elements cut from a larger textile element, therefore, the edges of textile elements **40**, **50**, and **60** do not need to be finished to prevent unraveling. Also this feature reduces waste and saves time and money in the manufacturing process.

The yarn forming textile elements **40**, **50**, and **60** may include cotton and wool fibers, natural filaments such as silk, and synthetic filaments that include rayon, nylon, polyester, and acrylic. Other materials also may be used without departing from this invention. The yarn may be a monofilament yarn or a plurality of individual filaments. The yarn may also be formed of separate filaments formed of different materials, or the yarn may be formed of filaments that are each formed of two or more different materials. Similar concepts also apply to yarns formed from fibers. In order to provide the stretch and recovery properties to upper **30**, and particularly textile elements **40**, **50**, and **60**, a yarn that incorporates an elastane fiber may be utilized. Elastane fibers are available from E. I. duPont de Nemours Company under the LYCRA trademark. Such fibers may have the configuration of covered LYCRA® wherein the fiber includes a LYCRA® core that is surrounded by a nylon sheath. One suitable yarn, for example, includes a 70 denier elastane core that is covered with nylon having a 2 ply, 80 denier, 92 filament structure. Other fibers or filaments exhibiting elastic properties may also be utilized.

The characteristics of the yarn selected for textile elements **40**, **50**, and **60** depend primarily upon the materials that form the various filaments and fibers. Cotton, for example, provides a soft hand, natural aesthetics, and biodegradability. Elastane fibers, as discussed above, provide substantial stretch and recoverability. Rayon provides drape and moisture absorption. Wool also provides high moisture absorption, in addition to insulating properties. Polytetrafluoroethylene coatings may provide a low friction contact between the textile and the skin. Nylon is a durable and abrasion-resistant material with high strength, and polyester is a hydrophobic material that dries quickly and also provides relatively high durability. The flat filaments of nylon/polyester may provide luster whereas textured filaments may provide bulk and a matte luster. Accordingly, the materials comprising the yarn may be selected to impart a variety of physical properties to textile elements **40**, **50**, and **60**, and the physical properties may include, for example, strength, stretch, support, stiffness, recovery, fit, and form.

Assembly Process

A suitable assembly process for footwear **10** is generally depicted in FIGS. **8**A-**8**E. The order of the various steps outlined below is discussed as an example of the manner in which footwear **10** may be assembled. One skilled in the relevant art will recognize, however, that a different order may also be utilized for assembling footwear **10**. With reference to FIG. **8**A, each of textile elements **40** and **50** are depicted as being stitched or otherwise joined to central textile element **60**. More particularly, lower edge **42** of lateral textile element **40** is stitched to lateral edge **65***a* of center portion **62**, and lower edge **52** of medial textile element **50** is stitched to medial edge **65***b* of center portion **62**. A variety of stitch types may be utilized to join edges **42**, **52**, **65***a*, and **65***b* in the manner discussed above. For example, edges **42**, **52**, **65***a*, and **65***b* may abut each other or overlap each other once the stitching is applied. In addition to stitching, edges **42**, **52**, **65***a*, and **65***b* may be joined to each other with an adhesive or with a heat bonding operation. Accordingly, a variety of methods may be utilized to join textile elements **40**, **50**, and **60**. Furthermore, one skilled in the relevant art will recognize that a last having the general shape of the foot may be utilized in joining textile elements **40**, **50**, and **60** to form upper **30**.

Once lower portions of textile elements **40** and **50** are joined to center portion **62**, textile elements **40** and **50** are joined to rearward portion **63**, as depicted in FIG. **8**B. More particularly, rear edge **43** of lateral textile element **40** is stitched to lateral edge **66***a* of rearward portion **63**, and rear edge **53** of medial textile element **50** is stitched to medial edge **66***b* of rearward portion **63**. With reference to FIG. **8**C, the assembly process continues by joining textile elements **40** and **50** to forward portion **61**. More particularly, upper edge **41** of lateral textile element **40** is stitched to lateral edge **64***a* of forward portion **61**, and upper edge **51** of medial textile element **50** is stitched to medial edge **64***b* of forward portion **61**.

At this point in the assembly process, textile elements **40**, **50**, and **60** are joined to each other to form an interior void shaped to receive the foot. The various other elements of footwear **10** may now be added. With reference to FIG. **8**D, lace elements **33** are positioned to extend through channels **44** and **54** and also extend under center portion **62** of central textile element **60**. Each of loops **35** are positioned to extend outward from upper portions of channels **44** and **54**, and central section **36** of lace elements **33** is positioned under and on the exterior of central textile element **60**. As the final steps in this example assembly process, as depicted in FIG. **8**E, lace **32** is threaded through lace elements **33**, heel counter **34** is adhesively-bonded or otherwise secured to an exterior of upper **30** in heel region **13**, and sole structure **20** is adhesively-bonded or otherwise secured to a lower area of upper **30**.

Additional Configurations

Footwear **10** provides an example of a suitable configuration of an article of footwear having an upper at least partially formed from a flat knit material structure. With reference to FIG. **9**A, another configuration for lateral textile element **40** is depicted as having various lace loops **45** in place of channels **44** and lace elements **33**. As discussed above, the flat knitting process may be utilized to form generally three-dimensional structures wherein layers of material overlap each other (i.e., are at least partially coextensive) to form loops or other overlapping configurations, as with channels **44** and **54**. Lace loops **45** may be used in place of lace elements **33** to receive portions of lace **32**. Although not necessary, lace elements **33** may be formed from a substantially inextensible material. In order to provide lace loops **45** with similar properties, the yarns and stitch selected for lace loops **45** may impart a substantially non-stretch configuration to upper **30** in the area of lace loops **45**.

Yet another configuration for lateral textile element **40** is depicted in FIG. **9**B as having a pocket **46** in place of channels **44** and lace elements **33**. Pocket **46** has an upper opening and is otherwise closed to permit small items (e.g., a key, identification, or change) to be secured within footwear **10**. As with channels **44** and lace loops **45**, pocket **46** is formed through the flat knitting process as a unitary construction with the textile element **40**. If desired, a flap or other closure element may be provided to help secure items within the pocket **46** (optionally, the flap may be formed as part of the textile element **40** in the flat knitting process (e.g., as a unitary, one-piece structure therewith).

As another example of a three-dimensional structure formed through a flat knitting process, an upper **70** is depicted in FIGS. **10**A-**10**C. Upper **70** includes a central portion **71**, a pair of side portions **72**, and eight lace loops **73**. Side portions **72** each include a side edge **74**, a rear edge **75**, and a central edge **76**. When assembled into an article of footwear, central portion **71** extends over the foot, and side portions **72** wrap under the foot. More particularly, side edges **74** are joined to each other (e.g., with stitching) to form a seam that extends under the foot and along a longitudinal length of the foot. In addition, rear edges **75** are joined to each other (e.g., with stitching) to form a seam that extends upward along the heel. In this configuration, central edge **76** may define an opening that permits the foot to enter and exit a void within upper **70**. A lace may also extend through lace loops **73** to provide adjustability.

Whereas side portions **72** are relatively flat in configuration, central portion **71** has a domed shape formed through the flat knitting process. That is, the flat knitting process forms central portion **71** to have a three-dimensional structure that is shaped to extend over the foot. In comparison with side portions **72**, which have a non-ribbed type of knit, central portion **71** may be ribbed. In addition to different knit types, different areas may also incorporate different yarns to further vary the properties of upper **70**. In addition to providing a three-dimensional structure, therefore, the flat knitting process may be utilized to impart different knit types and yarns to different areas of upper **70**, thereby varying the properties of upper **70** in the different areas.

Another article of footwear **10'** is depicted in FIGS. **11**A and **11**B as including a sole structure **20'** and an upper **30'**. Whereas footwear **10** includes sole structure **20** that is separate from and attached to upper **30**, sole structure **20'** of this example is a lower surface of a textile material that forms upper **30'**. Accordingly, footwear **10'** may be used for activities such as yoga where a minimal sole is acceptable. In other configurations, sole structure **20'** may include polymer foam or rubber elements that impart force attenuation and wear resistance. A separate sole structure may be provided for use with upper **30'**, if desired.

Upper **30'** includes a foot-receiving portion **31'** and a pair of straps **32'** that extend outward from sides of foot-receiving portion **31'**. Foot-receiving portion **31'** has the general configuration of a sock that is formed of unitary (i.e., one piece) construction by the flat knitting process. Foot-receiving portion **31'** is, therefore, a textile element shaped to extend around the foot, and foot-receiving portion **31'** has an opening **33'** for inserting and removing the foot from upper **30'**. Straps **32'** are each formed of unitary (i.e., one piece) construction with foot-receiving portion **31'** and are joined

with foot-receiving portion **31'** proximal opening **33'**. As with foot-receiving portion **31'**, straps **32'** are formed through the flat knitting process. Each of straps **32'** in this example structure are tapered from the area where straps **32'** are joined with foot-receiving portion **31'** to an end portion of straps **32'**. That is, the end portions of straps **32'** have a lesser width than the portions of straps **32'** that are adjacent opening **33'**. Straps **32'** may each be formed from a single layer of textile material, or each of straps **32'** may have a tubular configuration that is effectively formed from two layers of the textile material.

Straps **32'** are utilized to secure footwear **10'** to the foot. As such, straps **32'** may have a length that ranges, for example, between three inches and twenty-four inches, depending upon the size and intended use of footwear **10'**. As depicted, however, straps **32'** are approximately six inches in length. Each of straps **32'** has an end portion and a fastener **34'** that is located at the end portion. Fastener **34'** is depicted as corresponding portions of a hook-and-loop fastener, such as VELCRO®, but they may also be snaps, buttons, or other desired fasteners. With reference to FIG. **11**B, straps **32'** wrap around the ankle such that fastener **34'** is utilized to secure the end portions of straps **32'** together behind the ankle. Alternately, straps **32'** may be tied on the upper surface of the foot or may wrap around the foot to secure footwear **10'** to the foot. Accordingly, a variety of methods for securing footwear **10'** to the foot may be utilized, depending upon the foot size and preferences of the wearer.

Whereas upper **30** is formed from three separate textile elements **40**, **50**, and **60** that are joined through stitching, upper **30'** is formed from a single textile element formed of unitary construction. In contrast with upper **30**, therefore, upper **30'** is free from seams that may contact the foot during use. That is, foot-receiving portion **31'** of this example structure **10'** is formed to extend around the foot and does not include seams adjacent the foot. Furthermore, the seamless union of sole structure **20'** and upper **30'** in this example structure **10'** further reduces seams adjacent the foot. Accordingly, the flat knitting process may be utilized to form a seamless footwear component that extends around the foot.

FIGS. **12** and **13** illustrate additional examples of articles of footwear like the example shown in FIGS. **11**A and **11**B, but these additional examples have somewhat different straps and/or securing arrangements. In the example article of footwear **100** shown in FIG. **12**, the article of footwear **100** includes a sole structure **120** and an upper **130**. A separate sole structure **120** may be provided and attached to the upper **130**, if desired, or the upper **130** and the sole structure **120** may be provided as a unitary, one-piece construction (e.g., as a flat knit yoga shoe, slipper, bootie, or the like). The upper **130** of this example structure **100** includes a foot-receiving portion **131** that defines an opening **133** through which the wearer's foot may be inserted. This example structure **100** includes a single strap **132** that extends over the wearer's foot to secure the foot in the article of footwear **100**. While any desired type of securing system may be provided (e.g., buttons, snaps, hooks, buckles, etc.), in this example structure **100**, one portion of a hook-and-loop fastener **134** is provided on the free end of the strap **132**, and this portion of the fastener **134** secures to another portion of the hook-and-loop fastener (not shown) provided at the side of the upper **130**. The strap **132** may be provided on either the lateral side or the medial side of the upper member **130** without departing from the invention. This strap **132** may be provided as a unitary, one-piece construction with the upper member **130** by a flat knitting process, e.g., in the manner described above in conjunction with the strap **32** of FIGS. **11**A and **11**B. If desired, the strap **132** (as well as straps **32** described above) may be constructed from a stretchable material, e.g., to enable a snug and secure fit to the wearer's foot.

FIG. **13** illustrates an example article of footwear **200** having yet another strap/securing arrangement. In this example, parts that are the same or similar to those described in conjunction with FIG. **12** will be labeled with the same reference number (and the corresponding description thereof will be omitted). Rather than a single strap, in this example, several (e.g., four in the illustrated example) long and relatively thin and flexible straps **232** are provided. If desired, the straps **232** may be sufficiently thin and/or flexible to allow the wearer to tie them together around the foot (e.g., in a bow or a knot, akin to a shoelace), to thereby secure the foot in the article of footwear **200**. The straps **232** may be of sufficient length to wrap around the wearer's ankle one or more times, and optionally up the wearer's calf, e.g., in a manner similar to straps provided in conventional ballet slippers and/or Greco Roman type sandals. If desired, rather than tying, fastener elements (such as hook-and-loop fasteners, or the like) may be provided, e.g., in a manner similar to that described above in conjunction with FIGS. **11**A through **12**.

Straps **232** may be formed as a unitary, one piece construction with the upper member **130**, e.g., during a flat knitting process, like the processes described above in conjunction with FIGS. **11**A through **12**. Alternatively, if desired, the straps **232** may be separate from the upper member **130** (e.g., like a lace, belt, ribbon, or other strap element), optionally extending through channels formed in the upper member **130**, e.g., in a manner similar to the channels **44** and **54** described above in conjunction with FIGS. **1**-**8**E. Other strap and/or fastener arrangements may be provided without departing from this invention.

While the footwear structures **10'**, **100**, and **200** shown in FIGS. **11**A through **13** are illustrated as ballet or yoga type footwear, the described structures and techniques may be used to provide upper members or portions thereof (e.g., liners, bootie elements, etc.) for a wide variety of different footwear products without departing from the invention.

CONCLUSION

As described above, a flat knitting process may be utilized to form a variety of uppers or other structures for inclusion in footwear products. An advantage of flat knitting is that generally three-dimensional structures may be formed. In addition, structures wherein layers of material overlap each other to form loops or other overlapping configurations may be formed. The flat knitting process may also be utilized to form areas with different properties, e.g., by using combinations of different types of stitches and/or different types of yarns. Accordingly, flat knitting may be utilized to shape an upper and also provide different properties to different areas of the upper.

The invention is disclosed above and in the accompanying drawings with reference to a variety of embodiments. The purpose served by the disclosure, however, is to provide an example of the various features and concepts related to aspects of the invention, not to limit the scope of aspects of the invention. One skilled in the relevant art will recognize that numerous variations and modifications may be made to

the embodiments described above without departing from the scope of the invention, as defined by the appended claims.

What is claimed is:

1. An article of footwear comprising an upper including a flat-knitted element formed from at least one yarn mechanically manipulated in a flat-knitting process, the flat-knitted element including a first layer having:

a central portion having a domed, three-dimensional structure configured for extending over the top of a foot;

a first side portion being formed of unitary construction with the central portion and extending from a first side of the central portion; and

a second side portion being formed of unitary construction with the central portion and extending from a second side opposite the first side of the central portion, the domed, three-dimensional structure shaped to extend above the plane of the first side portion and the second side portion when the flat-knitted element is in a flattened configuration.

2. The article of footwear of claim **1**, further comprising a first loop being formed as a second layer of unitary construction with the first layer.

3. The article of footwear of claim **2**, wherein the first loop extends outward from the central portion.

4. The article of footwear of claim **2**, further comprising eight loops being formed as a second layer of unitary construction with the first layer.

5. The article of footwear of claim **1**, wherein the knitted element defines a void for receiving a foot of a wearer.

6. The article of footwear of claim **1**, wherein the knitted element defines at least a portion of an exterior surface of the upper, and the knitted element defines at least a portion of a void for receiving a foot of a wearer.

7. The article of footwear of claim **1**, wherein the knitted element includes a first area and a second area, the first area including a first type of knit structure, and the second area including a second type of knit structure, the first type being different than the second type.

8. The article of footwear of claim **1**, wherein the at least one mechanically manipulated yarn includes a first yarn and a different second yarn, the first yarn being located in a first area of the upper, and the second yarn being located in a second area of the upper.

9. The article of footwear of claim **1**, wherein the knitted element forms a defined shape having finished edges during the flat knitting process.

10. An article of footwear comprising an upper including a flat-knitted element formed from at least one yarn mechanically manipulated in a flat-knitting process, the flat-knitted element including a first layer and a second layer, the first layer including:

a central portion having a domed, three-dimensional structure configured for extending over the top of a foot;

a first side portion being formed of unitary construction with the central portion and extending from a first side of the central portion; and

a second side portion being formed of unitary construction with the central portion and extending from a second side opposite the first side of the central portion; and

the second layer being flat-knitted with the first layer at opposite ends of the second layer to form an overlapped loop.

11. A method of manufacturing an article of footwear, the method comprising

forming during a flat-knitting process an upper including a flat-knitted element including a first layer having:

a central portion having a domed, three-dimensional structure configured for extending over the top of a foot;

a first side portion being formed of unitary construction with the central portion and extending from a first side of the central portion; and

a second side portion being formed of unitary construction with the central portion and extending from a second side opposite the first side of the central portion, wherein the domed, three-dimensional structure is shaped to extend above the plane of the first side portion and the second side portion when the flat-knitted element is in a flattened configuration.

12. The method recited in claim **11**, wherein the flat knitting process includes forming a first area and a second area, a stitch type of the first area being different that a stitch type of the second area.

13. The method recited in claim **11**, wherein the flat knitting process includes forming a first area and a second area, a yarn type of the first area being different than a yarn type of the second area.

14. The method recited in claim **11**, wherein the flat knitting process includes forming a first area and a second area, a stitch type and a yarn type of the first area being different than a stitch type and a yarn type of the second area.

15. The method recited in claim **11**, further comprising assembling the flat-knitted element into an article of footwear.

16. The method recited in claim **15**, wherein the assembling includes joining side edges of the first side portion and the second side portion to form a seam extending under a foot and along a longitudinal length of the foot.

17. The method recited in claim **15**, wherein the assembling includes joining rear edges of the first side portion and the second side portion to form a seam that extends upward along a heel.

18. The method recited in claim **11**, wherein the flat knitting process includes forming a first loop of unitary construction in the textile element.

19. The method recited in claim **18**, further comprising extending a lace element through the first loop.

* * * * *