US 20050193592A1

(19) United States

(12) Patent Application Publication

(10) Pub. No.: US 2005/0193592 A1

(43) Pub. Date: Sep. 8, 2005

Dua et al.

(54) ARTICLE OF FOOTWEAR HAVING A TEXTILE UPPER

(75) Inventors: **Bhupesh Dua**, Portland, OR (US); **Edward Nathaniel Thomas**, Portland, OR (US)

Correspondence Address:
BANNER & WITCOFF, LTD.
1001 G STREET, N.W.
WASHINGTON, DC 20001-4597 (US)

(73) Assignee: **NIKE, Inc.**, Beaverton, OR

(21) Appl. No.: **10/791,289**

(22) Filed: **Mar. 3, 2004**

Publication Classification

(51) Int. Cl.[7] A43B 23/00

(52) U.S. Cl. 36/45

(57) ABSTRACT

An article of footwear and a method of manufacturing the article of footwear are disclosed. The footwear may include an upper and a sole structure. The upper incorporates a textile element with edges that are joined together to define at least a portion of a void for receiving a foot. The textile element may also have a first area and a second area with a unitary construction. The first area is formed of a first stitch configuration, and the second area is formed of a second stitch configuration that is different from the first stitch configuration to impart varying textures to a surface of the textile element. Various warp knitting or weft knitting processes may be utilized to form the textile element.

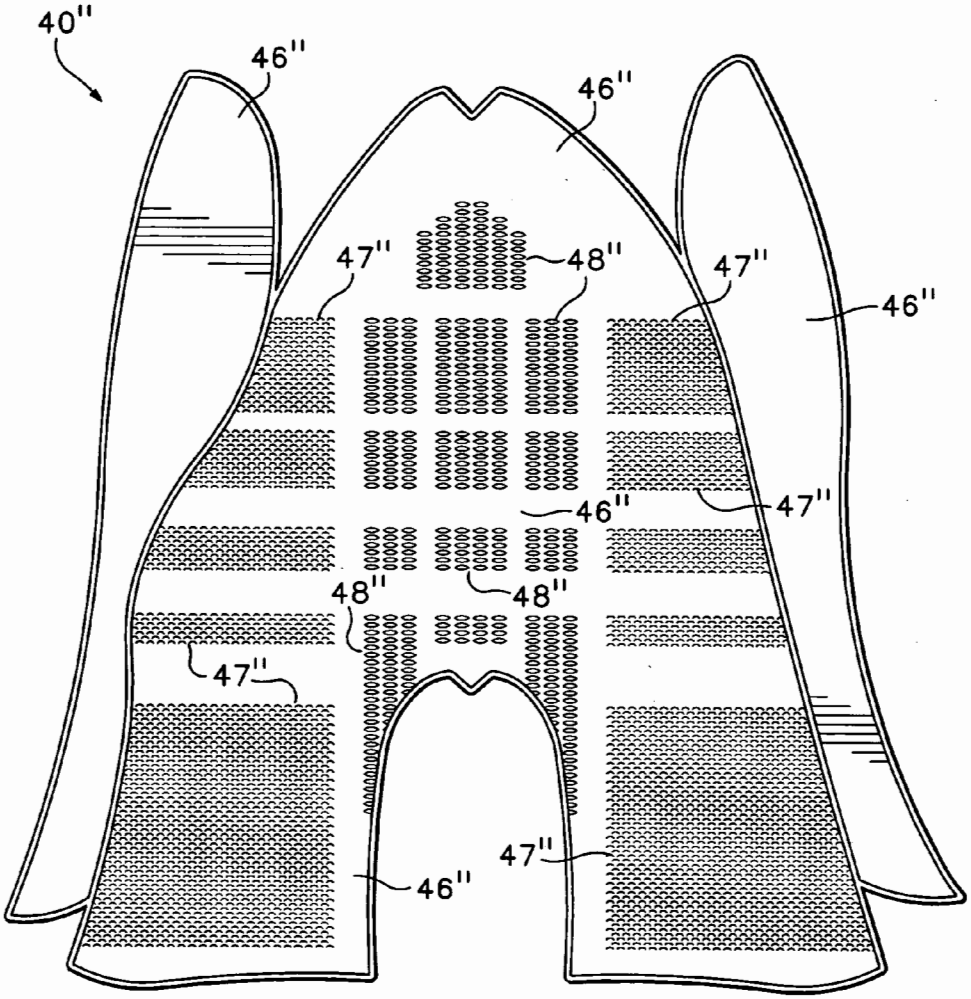

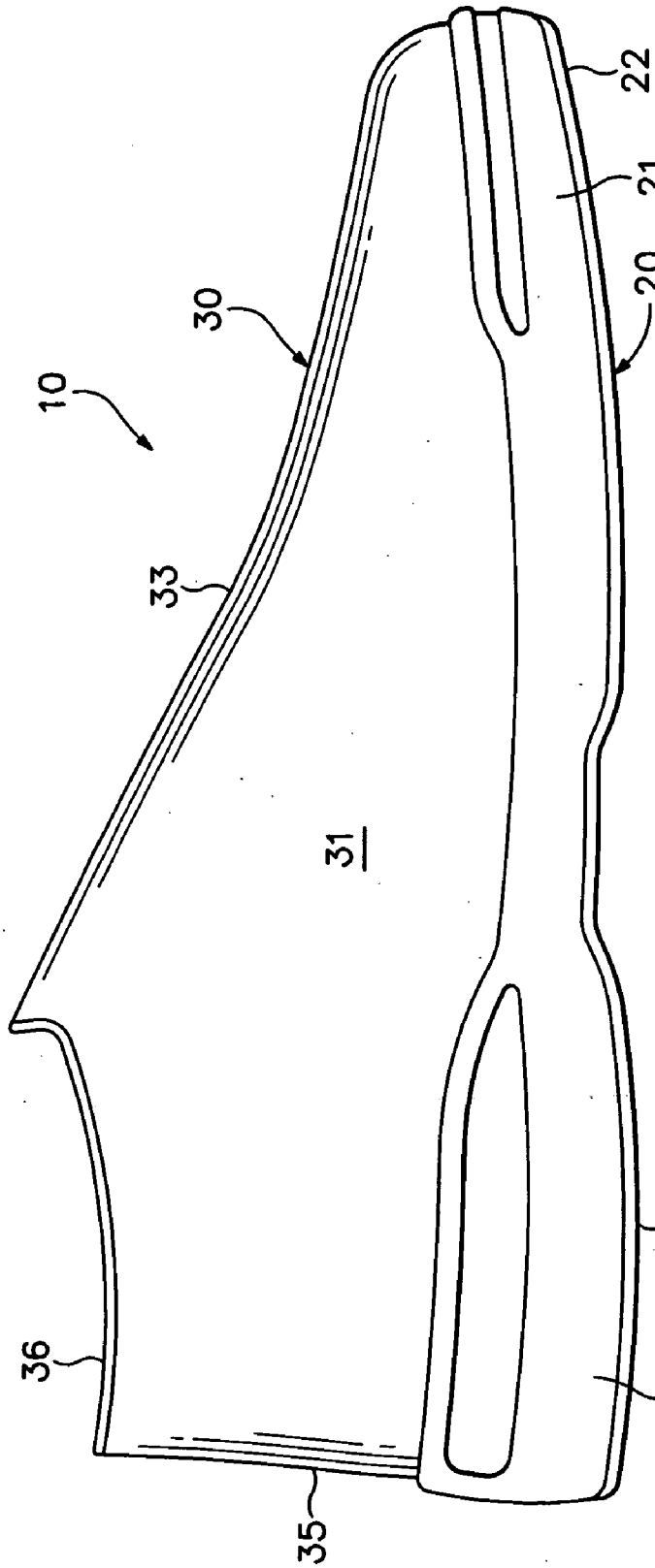

Figure 1

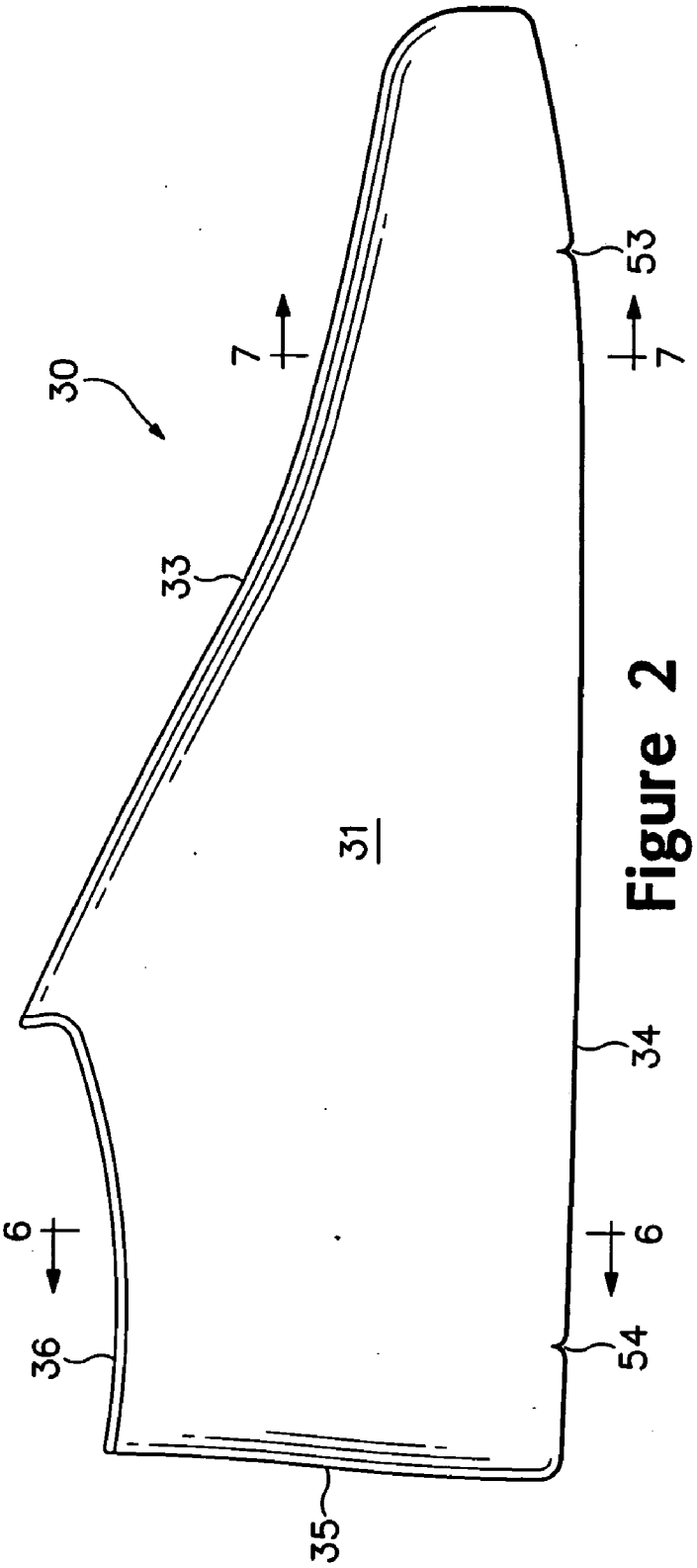

Figure 2

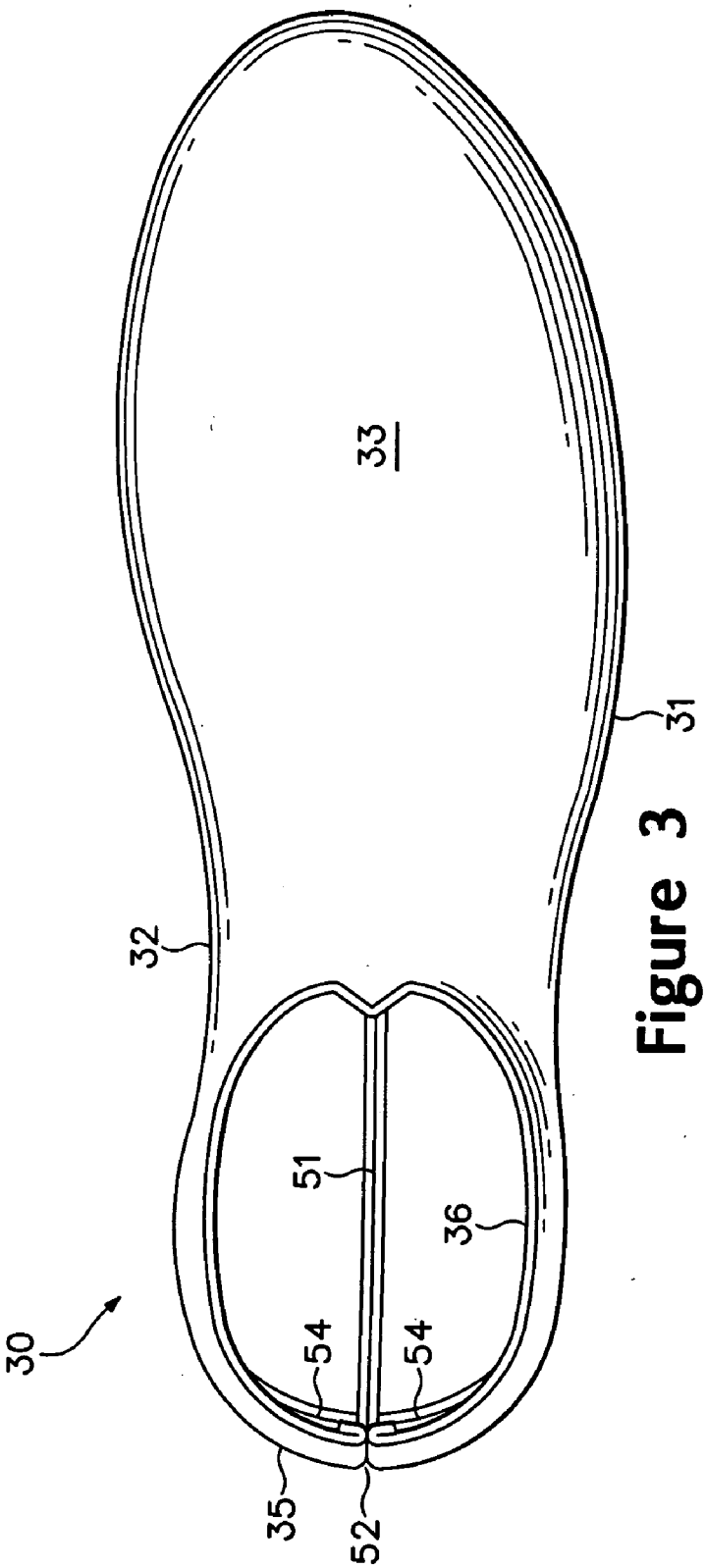

Figure 3

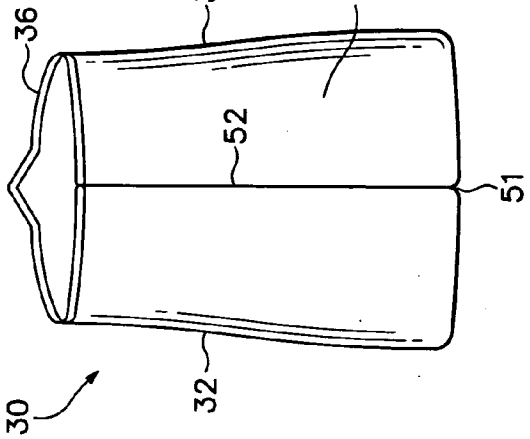

Figure 4

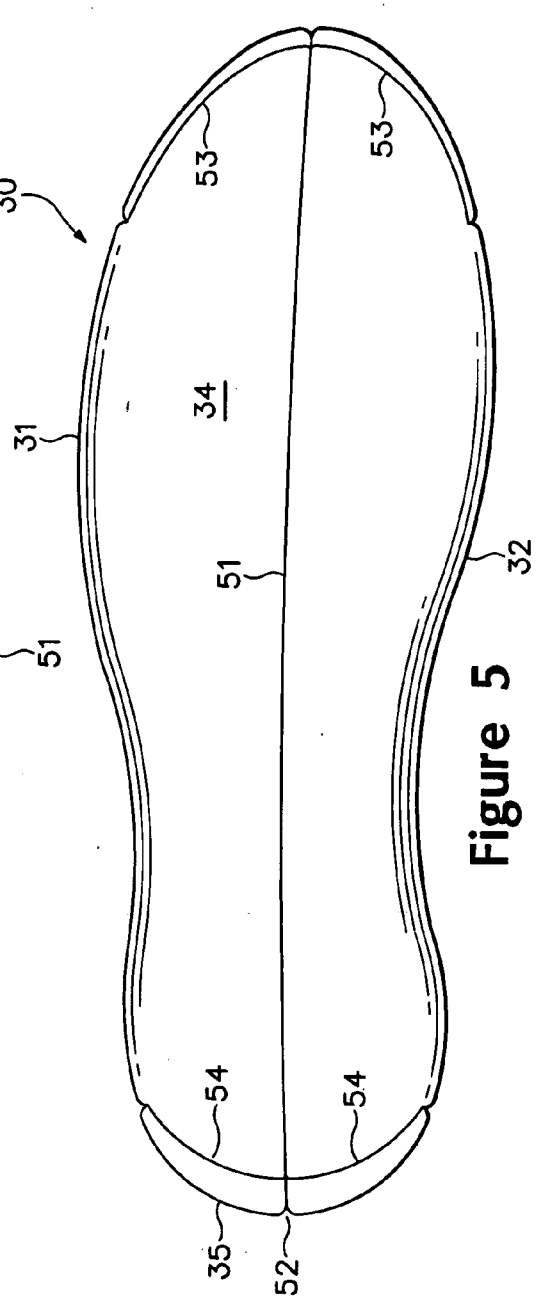

Figure 5

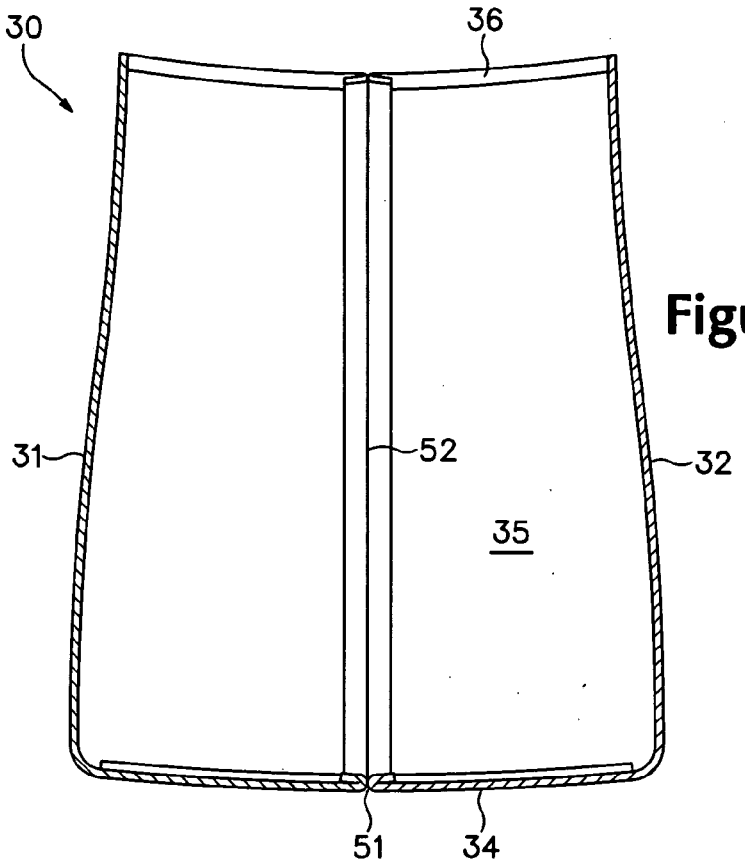

Figure 6

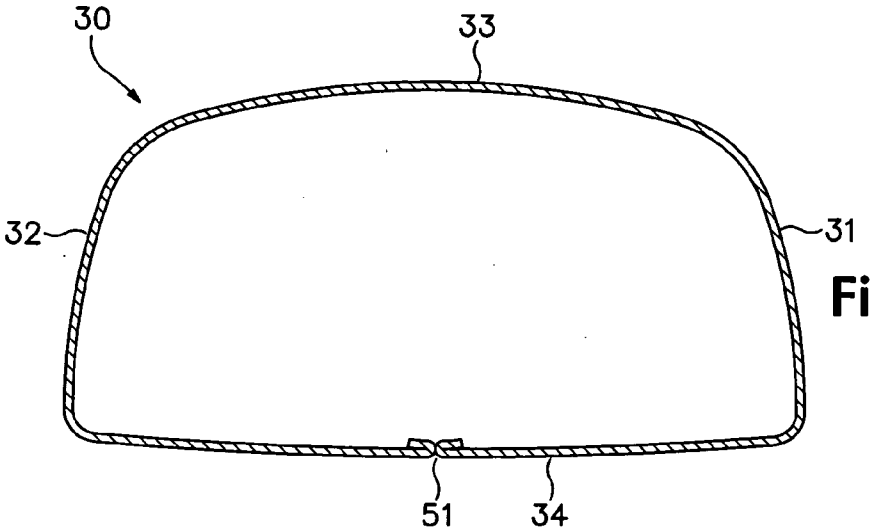

Figure 7

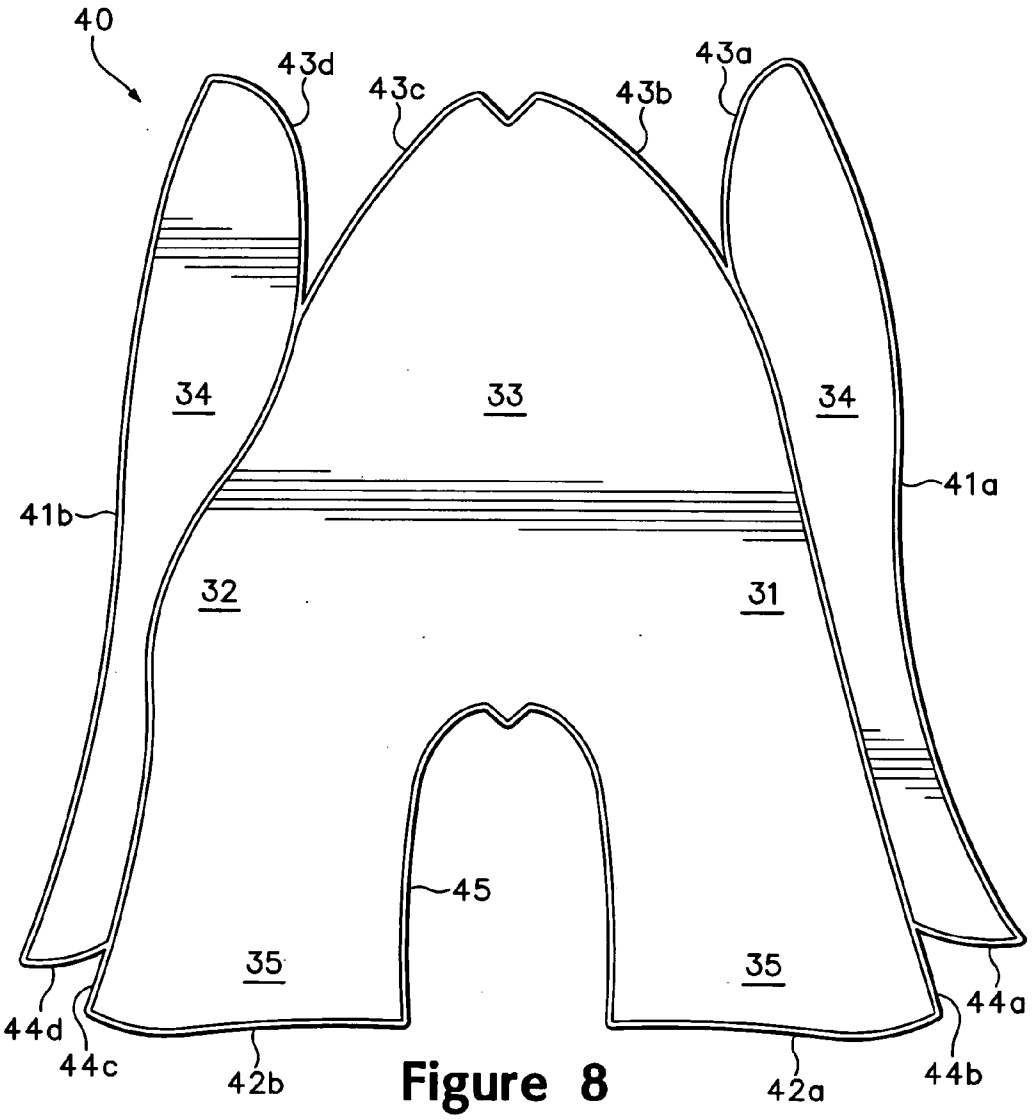
40
43d
43c
43b
43a
34
33
34
41b
41a
32
31
45
35
35
44d
44c
42b
42a
44b
44a

Figure 8

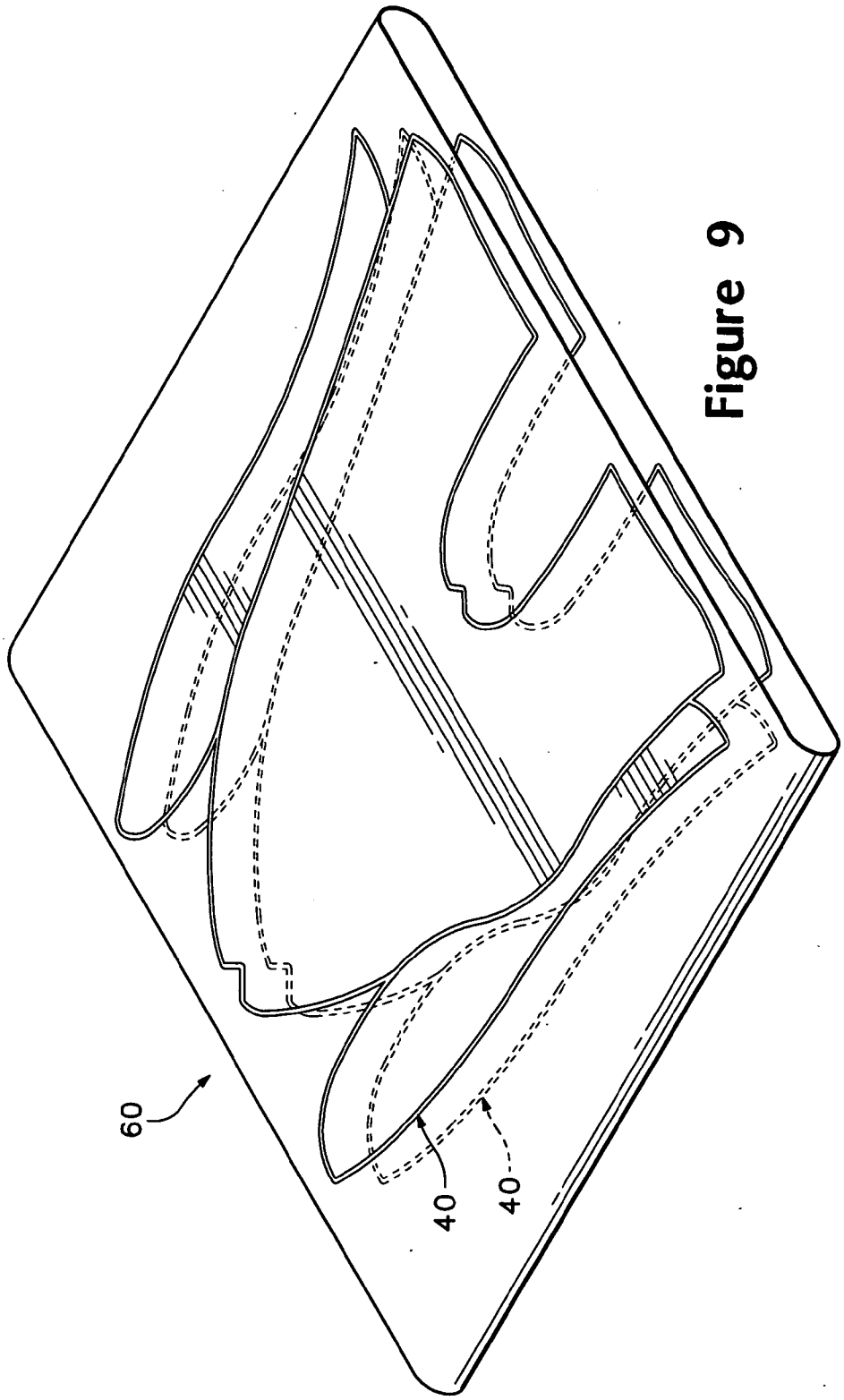

Figure 9

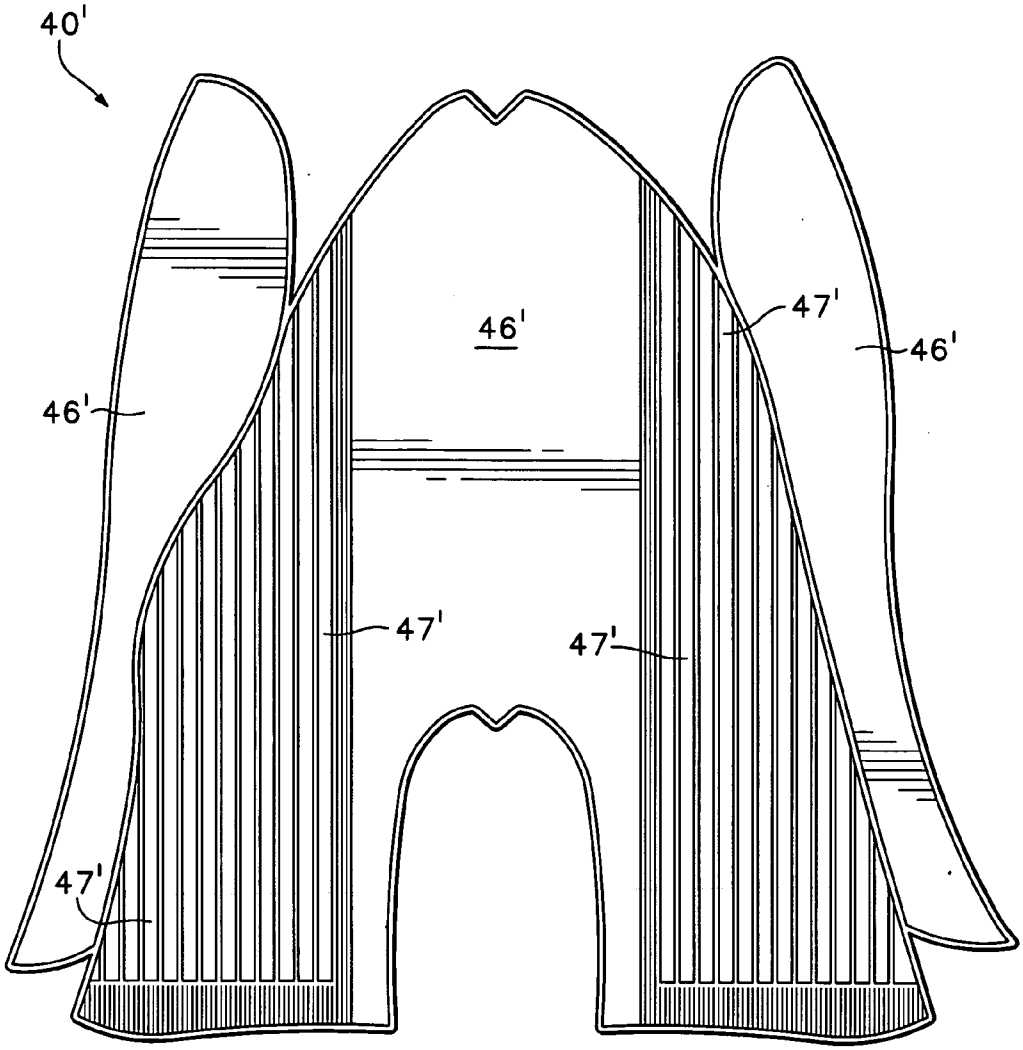

Figure 10

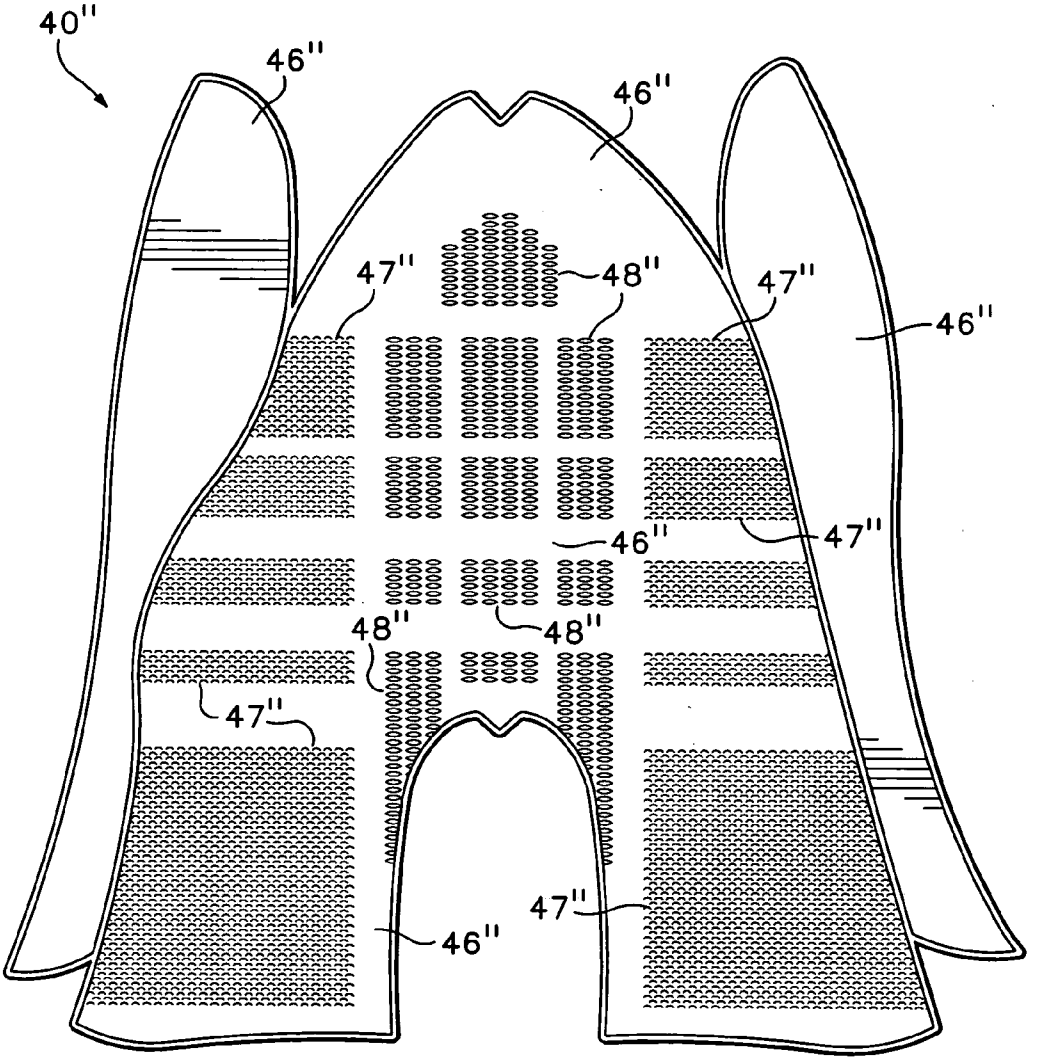

Figure 11

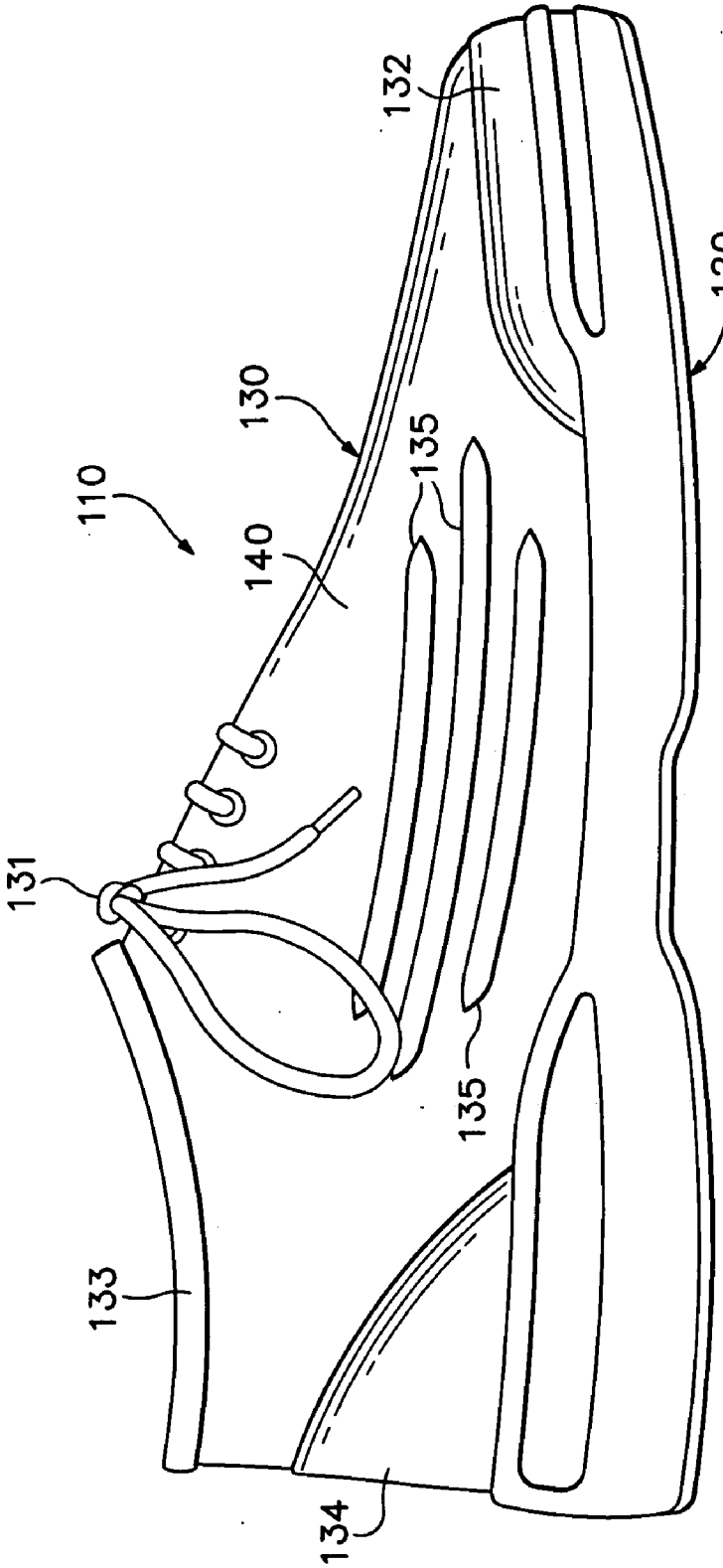

Figure 12

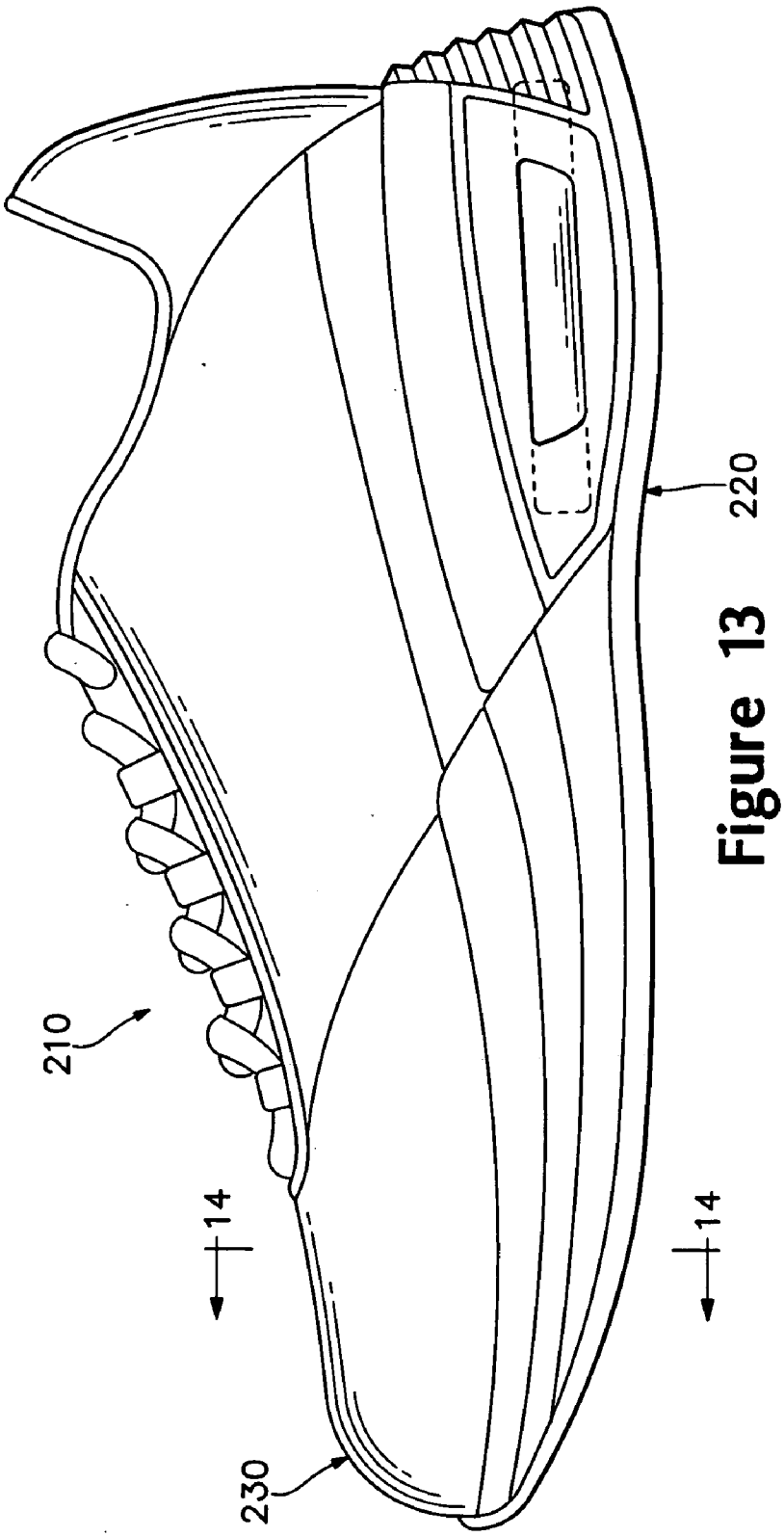

Figure 13

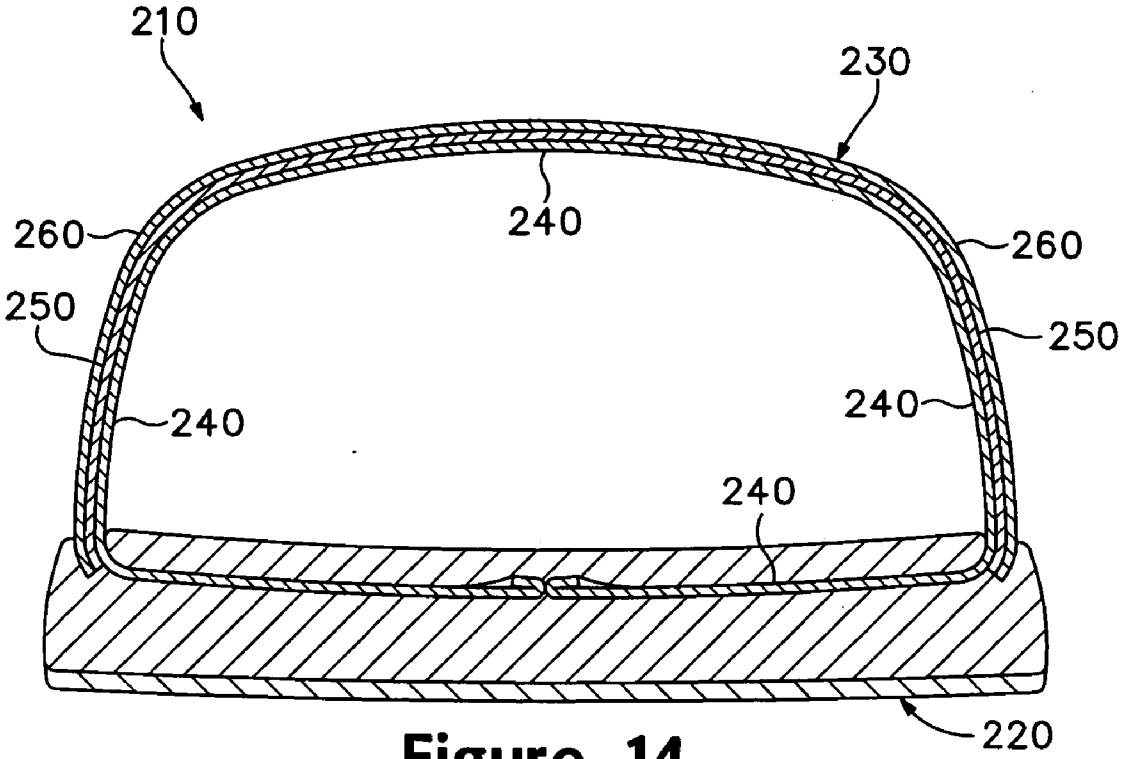

Figure 14

ARTICLE OF FOOTWEAR HAVING A TEXTILE UPPER

BACKGROUND OF THE INVENTION

[0001] 1. Field of the Invention

[0002] The present invention relates to footwear. The invention concerns, more particularly, an article of footwear incorporating an upper that is at least partially formed from a textile material.

[0003] 2. Description of Background Art

[0004] Conventional articles of athletic footwear include two primary elements, an upper and a sole structure. The upper provides a covering for the foot that securely receives and positions the foot with respect to the sole structure. In addition, the upper may have a configuration that protects the foot and provides ventilation, thereby cooling the foot and removing perspiration. The sole structure is secured to a lower surface of the upper and is generally positioned between the foot and the ground. In addition to attenuating ground reaction forces and absorbing energy (i.e., imparting cushioning), the sole structure may provide traction and control potentially harmful foot motion, such as over pronation. Accordingly, the upper and the sole structure operate cooperatively to provide a comfortable structure that is suited for a wide variety of ambulatory activities, such as walking and running. The general features and configuration of the conventional upper are discussed in greater detail below.

[0005] The upper forms a void on the interior of the footwear for receiving the foot. The void has the general shape of the foot, and access to the void is provided by an ankle opening. Accordingly, the upper extends over the instep and toe areas of the foot, along the medial and lateral sides of the foot, and around the heel area of the foot. A lacing system is often incorporated into the upper to selectively increase the size of the ankle opening and permit the wearer to modify certain dimensions of the upper, particularly girth, to accommodate feet with varying proportions. In addition, the upper may include a tongue that extends under the lacing system to enhance the comfort of the footwear, and the upper may include a heel counter to limit movement of the heel.

[0006] Various materials may be utilized in manufacturing the upper. The upper of an article of athletic footwear, for example, may be formed from multiple material layers that include an exterior layer, an intermediate layer, and an interior layer. The materials forming the exterior layer of the upper may be selected based upon the properties of wear-resistance, flexibility, and air-permeability, for example. With regard to the exterior layer, the toe area and the heel area may be formed of leather, synthetic leather, or a rubber material to impart a relatively high degree of wear-resistance. Leather, synthetic leather, and rubber materials may not exhibit the desired degree of flexibility and air-permeability. Accordingly, various other areas of the exterior layer of the upper may be formed from a synthetic or natural textile. The exterior layer of the upper may be formed, therefore, from numerous material elements that each impart different properties to specific portions of the upper.

[0007] An intermediate layer of the upper may be formed from a lightweight polymer foam material that provides cushioning and protects the foot from objects that may contact the upper. Similarly, an interior layer of the upper may be formed of a moisture-wicking textile that removes perspiration from the area immediately surrounding the foot. In some articles of athletic footwear, the various layers may be joined with an adhesive, and stitching may be utilized to join elements within a single layer or to reinforce specific areas of the upper.

[0008] Although the materials selected for the upper vary significantly, textile materials often form at least a portion of the exterior layer and interior layer. A textile may be defined as any manufacture from fibers, filaments, or yarns characterized by flexibility, fineness, and a high ratio of length to thickness. Textiles generally fall into two categories. The first category includes textiles produced directly from webs of filaments or fibers by randomly interlocking to construct non-woven fabrics and felts. The second category includes textiles formed through a mechanical manipulation of yarn, thereby producing a woven fabric, for example.

[0009] Yarn is the raw material utilized to form textiles in the second category. In general, yarn is defined as an assembly having a substantial length and relatively small cross-section that is formed of at least one filament or a plurality of fibers. Fibers have a relatively short length and require spinning or twisting processes to produce a yarn of suitable length for use in textiles. Common examples of fibers are cotton and wool. Filaments, however, have an indefinite length and may merely be combined with other filaments to produce a yarn suitable for use in textiles. Modern filaments include a plurality of synthetic materials such as rayon, nylon, polyester, and polyacrylic, with silk being the primary, naturally-occurring exception. Yarn may be formed of a single filament, which is conventionally referred to as a monofilament yarn, or a plurality of individual filaments grouped together. Yarn may also include separate filaments formed of different materials, or the yarn may include filaments that are each formed of two or more different materials. Similar concepts also apply to yarns formed from fibers. Accordingly, yarns may have a variety of configurations that generally conform to the definition provided above.

[0010] The various techniques for mechanically manipulating yarn into a textile include interweaving, intertwining and twisting, and interlooping. Interweaving is the intersection of two yarns that cross and interweave at right angles to each other. The yarns utilized in interweaving are conventionally referred to as warp and weft. Intertwining and twisting encompasses procedures such as braiding and knotting where yarns intertwine with each other to form a textile. Interlooping involves the formation of a plurality of columns of intermeshed loops, with knitting being the most common method of interlooping.

[0011] The textiles utilized in footwear uppers generally provide a lightweight, air-permeable structure that is flexible and comfortably receives the foot. In order to impart other properties to the footwear, including durability and stretch-resistance, additional materials are commonly combined with the textile, including leather, synthetic leather, or rubber, for example. With regard to durability, U.S. Pat. No. 4,447,967 to Zaino discloses an upper formed of a textile material that has a polymer material injected into specific zones to reinforce the zones against abrasion or other forms of wear. Regarding stretch resistance, U.S. Pat. No. 4,813,158 to Brown and U.S. Pat. No. 4,756,098 to Boggia both disclose a substantially inextensible material that is secured to the upper, thereby limiting the degree of stretch in specific portions of the upper.

[0012] From the perspective of manufacturing, utilizing multiple materials to impart different properties to an article

of footwear may be an inefficient practice. For example, the various materials utilized in a conventional upper are not generally obtained from a single supplier. Accordingly, a manufacturing facility must coordinate the receipt of specific quantities of materials with multiple suppliers that may have distinct business practices or may be located in different regions or countries. The various materials may also require additional machinery or different assembly line techniques to cut or otherwise prepare the material for incorporation into the footwear. In addition, incorporating separate materials into an upper may involve a plurality of distinct manufacturing steps requiring multiple individuals. Employing multiple materials, in addition to textiles, may also detract from the breathability of footwear. Leather, synthetic leather, or rubber, for example, are not generally permeable to air. Accordingly, positioning leather, synthetic leather, or rubber on the exterior of the upper may inhibit air flow through the upper, thereby increasing the amount of perspiration, water vapor, and heat trapped within the upper and around the foot.

SUMMARY OF THE INVENTION

[**0013**] The present invention is an upper for an article of footwear, the upper incorporating a textile element formed with a knitting machine, for example. In one aspect of the invention, the textile element has edges that are joined together to define at least a portion of a void for receiving a foot. In another aspect of the invention, the textile element has a first area and a second area of unitary construction. The first area is formed of a first stitch configuration, and the second area is formed of a second stitch configuration that is different from the first stitch configuration to impart varying textures to a surface of the textile element. The knitting machine may have a configuration that forms the textile element through either warp knitting or weft knitting.

[**0014**] Another aspect of the invention involves a method of manufacturing an article of footwear. The method includes a step of mechanically-manipulating a yarn with a circular knitting machine, for example, to form a cylindrical textile structure. In addition, the method involves removing at least one textile element from the textile structure, and incorporating the textile element into an upper of the article of footwear.

[**0015**] In another aspect of the invention, an article of footwear has an upper and a sole structure secured to the upper. The upper incorporates a textile element formed with a knitting machine. The textile element is removed from a textile structure that includes an outline of the textile element, and the textile element has edges that are joined together to define at least a portion of a void for receiving a foot.

[**0016**] The advantages and features of novelty characterizing the present invention are pointed out with particularity in the appended claims. To gain an improved understanding of the advantages and features of novelty, however, reference may be made to the following descriptive matter and accompanying drawings that describe and illustrate various embodiments and concepts related to the invention.

DESCRIPTION OF THE DRAWINGS

[**0017**] The foregoing Summary of the Invention, as well as the following Detailed Description of the Invention, will be better understood when read in conjunction with the accompanying drawings.

[**0018**] **FIG. 1** is a lateral elevational view of an article of footwear having an upper in accordance with the present invention.

[**0019**] **FIG. 2** is a lateral elevational view of the upper.

[**0020**] **FIG. 3** is a top plan view of the upper.

[**0021**] **FIG. 4** is a rear elevational view of the upper.

[**0022**] **FIG. 5** is a bottom plan view of the upper.

[**0023**] **FIG. 6** is a first cross-sectional view of the upper, as defined by section line **6-6** in **FIG. 2**.

[**0024**] **FIG. 7** is a second cross-sectional view of the upper, as defined by section line **7-7** in **FIG. 2**.

[**0025**] **FIG. 8** is a plan view of a textile element that forms at least a portion of the upper.

[**0026**] **FIG. 9** is a perspective view of a textile structure that incorporates two of the textile element.

[**0027**] **FIG. 10** is a plan view of another textile element.

[**0028**] **FIG. 11** is a plan view of yet another textile element.

[**0029**] **FIG. 12** is a lateral elevational view of another article of footwear having an upper in accordance with the present invention.

[**0030**] **FIG. 13** is a lateral elevational view of yet another article of footwear having an upper in accordance with the present invention.

[**0031**] **FIG. 14** is a cross-sectional view of the footwear depicted in **FIG. 13**, as defined by section line **14-14**.

DETAILED DESCRIPTION OF THE INVENTION

[**0032**] The following discussion and accompanying figures disclose an article of footwear **10** and a method of manufacturing footwear **10**, or components thereof, in accordance with the present invention. Footwear **10** is depicted in the figures and discussed below as having a configuration that is suitable for athletic activities, particularly running. The concepts disclosed with respect to footwear **10** may, however, be applied to footwear styles that are specifically designed for a variety of other athletic activities, including basketball, baseball, football, soccer, walking, and hiking, for example, and may also be applied to various non-athletic footwear styles. Accordingly, one skilled in the relevant art will recognize that the concepts disclosed herein may be applied to a wide range of footwear styles and are not limited to the specific embodiments discussed below and depicted in the figures.

[**0033**] The primary elements of footwear **10** are depicted in **FIG. 1** as being a sole structure **20** and an upper **30**. Sole structure **20** is secured to a lower portion of upper **30** and provides a durable, wear-resistant component that imparts cushioning as footwear **10** impacts the ground. Upper **30** is at least partially formed from a textile element **40** that defines an interior void for comfortably receiving a foot and securing a position of the foot relative to sole structure **20**. Various edges of textile element **40** are then secured together to form the shape of upper **30**. In some embodiments, textile element **40** may form substantially all of upper **30**, or textile element **40** may only be a portion of an upper.

[**0034**] Sole structure **20** has a generally conventional configuration that includes a midsole **21** and an outsole **22**.

Midsole **21** is secured to a lower portion of upper **30** and is formed of a polymer foam material, such as ethylvinylacetate or polyurethane. Accordingly, midsole **21** attenuates ground reaction forces and absorbs energy (i.e., provides cushioning) as sole structure **20** impacts the ground. To enhance the force attenuation and energy absorption characteristics of sole structure **20**, midsole **21** may incorporate a fluid-filled bladder, as disclosed in U.S. Pat. Nos. 4,183,156 and 4,219,945 to Rudy. Alternately or in combination, midsole **21** may incorporate a plurality of discrete, columnar support elements, as disclosed in U.S. Pat. Nos. 5,343,639 and 5,353,523 to Kilgore et al. Outsole **22** is secured to a lower surface of midsole **21** and may be formed from carbon black rubber compound to provide a durable, wear-resistant surface for engaging the ground. Outsole **22** may also incorporate a textured lower surface to enhance the traction characteristics of footwear **10**. In addition, footwear **10** may include an insole (not depicted), which is a relatively thin, cushioning member located within upper **30** and adjacent to a plantar surface of the foot for enhancing the comfort of footwear **10**.

[**0035**] Sole structure **20** is described above as having the elements of a conventional sole structure for athletic footwear. Other footwear styles, including, dress shoes and boots, for example, may have other types of conventional sole structures specifically tailored for use with the respective types of footwear. In addition to a conventional configuration, however, sole structure **20** may also exhibit a unique, non-conventional structure. Accordingly, the particular configuration of sole structure **20** may vary significantly within the scope of the present invention to include a wide range of configurations, whether conventional or non-conventional.

[**0036**] Upper **30** is depicted in **FIGS. 2-7** as having a lateral region **31**, an opposite medial region **32**, an instep region **33**, a lower region **34**, and a heel region **35**. Lateral region **31** extends through a longitudinal length of footwear **10** and is generally configured to contact and cover a lateral side of the foot. Medial region **32** has a similar configuration that generally corresponds with a medial side of the foot. Instep region **33** is positioned between lateral region **31** and medial region **32**, and instep region **33** extends over an instep area of the foot. Lower region **34** forms a bottom surface of upper **30** and also extends through the longitudinal length of footwear **10**. Heel region **35** forms a rear portion of upper **30** and is generally configured to contact and cover a heel area of the foot. In addition, lateral region **31**, medial region **32**, instep region **33**, and heel region **35** cooperatively define an ankle opening **36** for providing the foot with access to the void within upper **30**.

[**0037**] Upper **30** is at least partially formed from textile element **40**, which forms regions **31-35**, and may also include laces or other elements associated with a conventional upper for footwear. Textile element **40** is a single material element that is formed to exhibit a unitary (i.e., one-piece) construction, and textile element **40** is formed or otherwise shaped to extend around the foot. As depicted in **FIGS. 2-7**, textile element **40** forms both an exterior surface and an interior surface of upper **30**. Textile element **40** may be formed as a part of a larger textile element. Textile element **40** is then removed from the larger textile element and various edges of textile element **40** are secured together to form the shape of upper **30**. A plurality of seams **51-54** are formed, therefore, when joining the edges of the textile element. Seam **51** extends along the longitudinal length of lower region **34** and is centrally-located with respect to lateral region **31** and medial region **32**. Seam **52** is also centrally-located and extends upward along heel region **35**. A seam **53** is positioned in a forefoot area of upper **30** and joins a portion of lower region **34** with both of lateral region **31** and medial region **32**. In addition, a seam **54** is positioned in a rear area of upper **30** and joins a portion of lower region **34** with heel region **35**.

[**0038**] Textile element **40** exhibits the general shape depicted in **FIG. 8** prior to the formation of seams **51-54**. Following formation of seams **51-54**, however, textile element **40** exhibits the shape of upper **30** depicted in **FIGS. 2-7**. Seams **51-54** are formed by securing various edges of textile element **40** together. More specifically, (1) seam **51** is formed by securing an edge **41***a* with an edge **41***b*; (2) seam **52** is formed by securing an edge **42***a* with an edge **42***b*; (3) a first portion of seam **53** is formed by securing an edge **43***a* with an edge **43***b* (4) a second portion of seam **53** is formed by securing an edge **43***c* with an edge **43***d*; (5) a first portion of seam **54** is formed by securing an edge **44***a* with an edge **44***b*; and (6) a second portion of seam **54** is formed by securing an edge **44***c* with an edge **44***d*. Referring to **FIG. 8**, the positions of regions **31-35** and ankle opening **36** are identified to provide a frame of reference relating to the various portions of textile element **40**.

[**0039**] In order to join edges **41***a* and **41***b* to form seam **51**, textile element **40** is folded or otherwise overlapped such that edge **41***a* is placed adjacent to edge **41***b*. Stitching, an adhesive, or heat bonding, for example, is then utilized to secure edge **41***a* and edge **41***b*. Textile element **40**, as depicted in **FIG. 8**, has a generally planar configuration. Upon the formation of seam **51**, however, one portion of textile element **40** overlaps the other portion of textile element **40**. The volume between the overlapping portions effectively forms a portion of the void within upper **30** for receiving the foot.

[**0040**] The folding or overlapping of textile element **40** to form seam **51** places edge **42***a* adjacent to edge **42***b*, which facilitates the formation of seam **52**. With reference to **FIG. 8**, an edge **45** forms a generally u-shaped area in textile element **40**. Upon the joining of edges **42***a* and **42***b* to form seam **52**, the u-shaped area becomes an aperture in textile element **40** and effectively forms ankle opening **36**. Each of edges **43***a*-**43***d* and edges **44***a*-**44***d* are formed from a generally v-shaped area of textile element **40**. Accordingly, seams **53** and **54** may be formed by closing the v-shaped areas and securing the various edges together.

[**0041**] Following the formation of each of seams **51-54**, the manufacturing of upper **30** is essentially complete. Various finishing steps may be performed, such as reinforcing ankle opening **36**, for example. Upper **30** (i.e., textile element **40**) is then secured to sole structure **20**, with an adhesive, for example. The insole is then placed into the void within upper **30** and adjacent to lower region **34**. In some embodiments, various reinforcing members may be added to the exterior or interior surface of upper **20** in order to limit the degree of stretch in upper **20** or provide enhanced wear-resistance. In addition, a lacing system may be added to provide adjustability.

[**0042**] Textile element **40** is a single material element with a unitary construction, as discussed above. As defined for purposes of the present invention, unitary construction is intended to express a configuration wherein portions of a textile element are not joined together by seams or other connections, as depicted with textile element **40** in **FIG. 8**. Although the various edges **41***a*-**44***d* are joined together to

form seams **51-54**, the various portions of textile element **40** are formed as an unitary element without seams, as discussed below.

[**0043**] Textile element **40** is primarily formed from one or more yarns that are mechanically-manipulated through either an interweaving, intertwining and twisting, or interlooping process, for example. As discussed in the Background of the Invention section above, interweaving is the intersection of two yarns that cross and interweave at right angles to each other. The yarns utilized in interweaving are conventionally referred to as warp and weft. Intertwining and twisting encompasses procedures such as braiding and knotting where yarns intertwine with each other to form a textile. Interlooping involves the formation of a plurality of columns of intermeshed loops, with knitting being the most common method of interlooping. Textile element **40** may, therefore, be formed from one of these processes for manufacturing a textile.

[**0044**] A variety of mechanical processes have been developed to manufacture a textile. In general, the mechanical processes may be classified as either warp knitting or weft knitting. With regard to warp knitting, various specific sub-types that may be utilized to manufacture a textile include tricot, raschel, and double needle-bar raschel (which further includes jacquard double needle-bar raschel). With regard to weft knitting, various specific sub-types that may be utilized to manufacture a textile include circular knitting and flat knitting. Various types of circular knitting include sock knitting (narrow tube), body garment (seamless or wide tube), and jacquard.

[**0045**] Textile element **40** may be formed through any of the mechanical processes discussed above. Accordingly, textile element **40** may be formed on either a warp knitting machine or a weft knitting machine. One suitable knitting machine for forming textile element **40** is a wide-tube circular knit jacquard machine. Another suitable knitting machine for forming textile element **40** is a wide-tube circular knitting machine that is produced in the Lonati Group by Santoni S.p.A. of Italy under the SM8 TOP1 model number. This Santoni S.p.A. wide-tube circular knitting machine may form a textile structure having a diameter that ranges from 10 inches to 20 inches, with 8 feeds for each diameter. The machine exhibits a maximum 140 revolutions per minute for 10 inch diameters, and a maximum 120 revolutions per minute for 13 inch diameters. Furthermore, the machine gauge is variable between 16, 22, 24, 26, 28, and 32 needles per inch, and is suitable for various needle gauges ranging from 48 to 75.

[**0046**] A wide-tube circular knitting machine, as produced by Santoni S.p.A., forms a generally cylindrical textile structure and is capable of forming various types of stitches within a single textile structure. In general, the wide-tube circular knitting machine may be programmed to alter the design on the textile structure through needle selection. That is, the type of stitch that is formed at each location on the textile structure may be selected by programming the wide-tube circular knitting machine such that specific needles either accept or do not accept yarn at each stitch location. In this manner, various patterns, textures, or designs may be selectively and purposefully imparted to the textile structure.

[**0047**] An example of a textile structure **60** that may be formed with a wide-tube circular knitting machine is depicted in **FIG. 9**. Textile structure **60** has a generally cylindrical configuration, and the types of stitches vary throughout textile structure **60** so that a pattern is formed with the outline of textile element **40**. That is, differences in the stitches within textile structure **60** form an outline with the shape and proportions of textile element **40**.

[**0048**] The Santoni S.p.A. wide-tube circular knitting machine may form a textile structure having a diameter that ranges from 10 inches to 16 inches, as discussed above. Assuming that textile structure **60** exhibits a diameter of 10 inches, then the circumference of textile structure **60** is approximately 31 inches. In many circumstances, the total width of textile element **40** will be approximately 12 inches, depending upon the size of footwear **10**. The outlines for at least two textile elements **40** may, therefore, be formed on textile structure **60**. Referring to **FIG. 9**, the outline of textile element **40** is depicted on a front portion of textile structure **60**, and the outline of another textile element **40** is depicted on a rear portion of textile structure **60**. Accordingly, a first textile element **40** and a second textile element **40** may be simultaneously formed in a single textile structure **60**. As the diameter of textile element **60** is increased or the width of textile element **40** decreases, however, an even greater number of textile elements **40** may be outlined on textile structure **60**.

[**0049**] Textile structure **60** may be formed with a wide-tube circular knitting machine, as discussed above. The types of stitches that form textile structure **60** may be varied to form an outline of one or more textile elements **40** on textile structure **60**. That is, the wide-tube circular knitting machine may be programmed to form different types of stitches in textile structure **60** so as to outline one or more textile elements **40**. Each textile element **40** is then removed from textile structure **60** with a die-cutting, laser-cutting, or other conventional cutting operation. Once textile element **40** is removed from textile structure **60**, seams **51-54** may be formed and textile element **40** may be incorporated into footwear **10**.

[**0050**] The yarn forming textile element **40** may be generally defined as an assembly having a substantial length and relatively small cross-section that is formed of at least one filament or a plurality of fibers. Fibers have a relatively short length and require spinning or twisting processes to produce a yarn of suitable length for use in an interlooping process. Common examples of fibers are cotton and wool. Filaments, however, have an indefinite length and may merely be combined with other filaments to produce a yarn suitable for use in an interlooping process. Modern filaments include a plurality of synthetic materials such as rayon, nylon, polyester, and acrylic, with silk being the primary, naturally-occurring exception. Yarn may be formed of a single filament (conventionally referred to as a monofilament yarn) or a plurality of individual filaments. Yarn may also be formed of separate filaments formed of different materials, or the yarn may be formed of filaments that are each formed of two or more different materials. Similar concepts also apply to yarns formed from fibers. Accordingly, yarns may have a variety of configurations within the scope of the present invention that generally conform to the definition provided above.

[**0051**] In order to provide the stretch and recovery properties to upper **30**, and particularly textile element **40**, a yarn that incorporates an elastane fiber may be utilized. Elastane fibers are available from E.I. duPont de Nemours Company under the LYCRA trademark. Such fibers may have the configuration of covered LYCRA, wherein the fiber includes a LYCRA core that is surrounded by a nylon sheath. One suitable yarn, for example, includes a 70 denier elastane core

that is covered with nylon having a 2 ply, 80 denier, 92 filament structure. Other fibers or filaments exhibiting elastic properties may also be utilized.

[0052] As discussed above, a yarn that incorporates elastane fibers is suitable for textile element **40**. A plurality of other yarns, whether elastic or inelastic, are also suitable for textile element **40**. The characteristics of the yarn selected for textile element **40** depend primarily upon the materials that form the various filaments and fibers. Cotton, for example, provides a soft hand, natural aesthetics, and biodegradability. Elastane fibers, as discussed above, provide substantial stretch and recoverability. Rayon provides high luster and moisture absorption. Wool also provides high moisture absorption, in addition to insulating properties. Polytetrafluoroethylene coatings may provide a low friction contact between the textile and the skin. Nylon is a durable and abrasion-resistant material with high strength. Finally, polyester is a hydrophobic material that also provides relatively high durability. Accordingly, the materials comprising the yarn may be selected to impart a variety of physical properties to textile element **40**, and the physical properties may include, for example, strength, stretch, support, stiffness, recovery, fit, and form.

[0053] Textile element **40** is depicted as having a generally smooth, non-varied stitch configuration. That is, similar stitches are utilized throughout textile element **40** to impart a common texture to the various portions of textile element **40**. As discussed above, however, a wide-tube circular knitting machine is generally capable of forming various types of stitches within a single textile structure. The wide-tube circular knitting machine may, therefore, vary the stitches within textile element **40** to produce various patterns, designs, or textures, for example. Various types of stitches may also be formed with other types of knitting machines. With reference to **FIG. 10**, a textile element **40'** with the general shape of textile element **40** is depicted as having various areas with different textures. For example, a central area that corresponds with instep region **33** has a first texture **46'** that is generally smooth. In addition, textile element **40'** includes a second texture **47'** that is a plurality of longitudinal ribs. When incorporated into footwear **10**, the ribs will extend longitudinally along lateral region **31** and medial region **32**, and the ribs may extend into heel region **35**. The ribs may be present for aesthetic purposes, or may affect the stretch properties of upper **20**, for example. Accordingly, textile element **40'** exhibits areas with different textures in a single element of textile material.

[0054] Many conventional articles of footwear incorporate uppers with various material elements that each exhibit different properties. For example, a first material element may be smooth, and a second material element may be textured. The first and second material elements are then stitched together to form a portion of the conventional upper. Textile element **40'** also exhibits smooth and textured areas. In contrast with the conventional upper, however, first texture **46'** and second texture **47'** are incorporated into a single, unitary element of textile, rather than two separate elements that are stitched or otherwise joined together.

[0055] A textile structure **40"** is depicted in **FIG. 11** and has the general shape of both textile element **40** and textile element **40'**. Textile element **40"** includes areas with three different textures. A first texture **46"** is generally smooth and has the configuration of various strips that extends laterally across areas corresponding with lateral region **31**, medial region **32**, and instep region **33**. Various portions of textile element **40"** also include a second texture **47"**, which is generally rough in comparison with first texture **46"**. In addition, the area of textile element **40"** corresponding with instep region **33** includes a third texture **48"**. The different textures **46"-48"** are formed by merely varying the type of stitch formed by the wide-tube circular knitting machine at each location of textile element **40"**. Textures **46"-48"** may exhibit aesthetic differences, or the differences may be structural. For example, the degree of stretch in areas with textures **46"-48"** may be different, or the wear resistance of the areas may vary depending upon the stitch utilized. The air-permeability of textile element **40"** may also vary in the different areas. Third texture **48"** is formed to include a plurality of apertures that extend through textile element **40"**. The apertures may be formed by omitting stitches at specific locations during the wide-tube circular knitting process, and the apertures facilitate the transfer of air between the void within upper **20** and the area outside of upper **20**. Accordingly, the various stitches formed in textile element **40"**, or one of textile elements **40** or **40'**, may be utilized to vary the texture, physical properties, or aesthetics of footwear **10** within a single, unitary element of material.

[0056] In addition to varying the stitch types to form textures **46'-47'** and **46"-48"**, the type of yarn utilized in various areas of textile elements **40'** and **40"** may be changed to impart different properties. As discussed above, yarn may be formed from cotton, wool, elastane, rayon, nylon, and polyester, for example. Each of these yarn types may impart differing properties to the areas corresponding with textures **46'-47'** and **46"-48"**. For example, elastane may be utilized to impart stretch, wool may be utilized for insulation, and nylon may be utilized for durability. Accordingly, different yarn types may be utilized to impart different properties. The types of knitting that may be utilized to form different zones with different properties (e.g., yarn characteristics, textures, etc.) may vary significantly to include the various warp knitting and weft knitting processes discussed earlier, such as tricot, raschel, double needle-bar raschel, circular knitting, and flat knitting, for example.

[0057] An article of footwear **110** is depicted in **FIG. 12** and includes a sole structure **120** and an upper **130**. Upper **130** includes a textile element **140** having the general configuration of textile element **40**. As with textile element **40**, textile element **140** forms both an exterior surface and an interior surface of upper **130**. In addition, upper **130** includes a lace **131** and a plurality of elements **132-135** that also form a portion of the exterior surface. Lace **131** extends through a plurality of apertures formed in textile element **140**. The apertures may be formed by omitting stitches at specific locations. Element **132** is positioned in a forefoot area of footwear **110** and may be formed of leather or rubber, for example, to provide additional wear-resistance. Element **133** extends around the ankle opening to reinforce and limit stretch in the area of the ankle opening. Element **134** extends around the heel region to counter movement of the heel and seat the heel above sole structure **120**. Furthermore, elements **135** are substantially inextensible strips of material, such as leather or synthetic leather, that limit stretch on the lateral side of footwear **110**. Whereas upper **30** was almost exclusively formed by textile element **40**, upper **130** also includes lace **131** and elements **132-135**. Accordingly, an upper in accordance with the present invention may incorporate a plurality of additional components.

[0058] Another article of footwear **210** is depicted in **FIGS. 13-14** and includes a sole structure **220** and an upper **230**. Upper **230** includes a textile element **240** that forms an

interior layer. In addition, upper **230** includes an intermediate layer **250** and an exterior layer **260**. As discussed in the Background of the Invention section above, the upper of a conventional article of footwear may be formed from multiple material layers that include an exterior layer, a intermediate layer, and an interior layer. The materials forming the exterior layer of the upper may be selected based upon the properties of wear-resistance, flexibility, and air-permeability, for example. The intermediate layer of the upper may be formed from a lightweight polymer foam material that provides cushioning and protects the foot from objects that may contact the upper. Similarly, an interior layer of the upper may be formed of a moisture-wicking textile that removes perspiration from the area immediately surrounding the foot.

[**0059**] Upper **230** has a configuration that is similar to the configuration of the conventional upper in that various material layers are utilized. In contrast with the conventional upper, however, the interior layer is formed of textile element **240**, which is manufactured through the process discussed above. That is, textile element **240** is a single element of textile that forms the interior layer of upper **230**. A benefit to utilizing textile element **240** for the interior layer is that textile element **240** includes few seams that may contact the foot. In addition, the stitches utilized at various locations of textile element **240** may modify the texture of the interior surface of upper **230**, thereby limiting the degree of slip that occurs between the foot and upper **230** or enhancing the air-permeability of upper **230** in specific locations.

[**0060**] Various warp knitting or weft knitting processes may be utilized to form textile element **40**, or the various other textile elements discussed above. An advantage of this process is that various stitches may be incorporated into specific locations of textile element **40** to modify the physical properties or aesthetics of textile element **40**. Whereas a conventional upper includes various elements that stitched or adhesively joined, textile element **40** is a single, unitary element of material. From the perspective of manufacturing, utilizing multiple materials to impart different properties to an article of footwear may be an inefficient practice. By forming textile element **40** to be a single, unitary element of material, however, efficiency is increased in that upper **20** may include a single textile element, rather than numerous joined elements.

[**0061**] A variety of knitting processes may be utilized to form textile element **40**, as discussed above. As a specific example, a jacquard double needle-bar raschel knitting machine may be utilized to form a flat textile structure, and may also be utilized to form the textile structure to have the configuration of a spacer mesh textile. Unlike textile structure **60**, which exhibits a generally cylindrical configuration, the textile structure formed with the jacquard double needle-bar raschel knitting machine will have a flat configuration. Like textile structure **60**, however, an outline of a textile element may be imparted to the textile structure formed with the jacquard double needle-bar raschel knitting machine. That is, differences in the stitches within the textile structure may form an outline with the shape and proportions of the intended textile element. Accordingly, the textile element may be removed from the textile structure and incorporated into footwear **10**. In addition, the jacquard double needle-bar raschel knitting machine may be utilized to impart various textures, different properties, or different yarn types to the textile element. Similarly, other types of knitting, such as a flat knitting, may be utilized within the scope of the present invention to impart various textures, different properties, or different yarn types to the textile element.

[**0062**] The present invention is disclosed above and in the accompanying drawings with reference to a variety of embodiments. The purpose served by the disclosure, however, is to provide an example of the various features and concepts related to the invention, not to limit the scope of the invention. One skilled in the relevant art will recognize that numerous variations and modifications may be made to the embodiments described above without departing from the scope of the present invention, as defined by the appended claims.

That which is claimed is:

1. An article of footwear comprising:

an upper incorporating a textile element formed through a weft knitting process, the textile element having edges that are joined together to define at least a portion of a void for receiving a foot; and

a sole structure secured to the upper.

2. The article of footwear recited in claim 1, wherein the textile element forms at least a portion of a lateral side, a medial side, and an instep region of the upper.

3. The article of footwear recited in claim 1, wherein the edges include a pair of first edges that are joined to form a first seam extending longitudinally along a lower region of the upper.

4. The article of footwear recited in claim 3, wherein the edges include a pair of second edges that are joined to form a second seam extending along a heel region of the upper.

5. The article of footwear recited in claim 4, wherein the second seam extends vertically.

6. The article of footwear recited in claim 4, wherein the edges include at least a pair of third edges that are joined to form a third seam extending through a forefoot area of the upper.

7. The article of footwear recited in claim 1, wherein the textile element has a first area and a second area with a unitary construction, the first area being formed of a first stitch type, and the second area being formed of a second stitch type that is different from the first stitch type to impart varying textures to a surface of the textile element.

8. The article of footwear recited in claim 7, wherein the first stitch type provides a substantially smooth texture to the first area.

9. The article of footwear recited in claim 8, wherein the second stitch type provides a generally rough texture to the second area.

10. The article of footwear recited in claim 7, wherein at least one of the first stitch type and the second stitch type form an aperture in the textile element.

11. The article of footwear recited in claim 1, wherein the textile element is one of an exterior layer, an intermediate layer, and an interior layer of the upper.

12. The article of footwear recited in claim 1, wherein the upper includes an exterior layer, an intermediate layer, and an interior layer, and the textile element forms at least a portion of the interior layer.

13. The article of footwear recited in claim 1, wherein the textile layer forms at least a portion of both an interior surface and an exterior surface of the upper.

14. The article of footwear recited in claim 13, wherein at least one additional element is secured to the exterior surface and forms a portion of the exterior surface.

15. The article of footwear recited in claim 14, wherein the additional element is secured to a forefoot area of the upper.

16. The article of footwear recited in claim 14, wherein the additional element is secured to a heel area of the upper.

17. The article of footwear recited in claim 1, wherein the textile element forms an interior surface of the upper.

18. The article of footwear recited in claim 1, wherein the weft knitting process is circular knitting.

19. The article of footwear recited in claim 1, wherein the weft knitting process is flat knitting.

20. An article of footwear comprising:

an upper incorporating a textile element formed through a weft knitting process, the textile element having a first area and a second area with a unitary construction, the first area being formed of a first stitch configuration, and the second area being formed of a second stitch configuration that is different from the first stitch configuration to impart varying properties to the textile element; and

a sole structure secured to the upper.

21. The article of footwear recited in claim 20, wherein the first stitch configuration provides a substantially smooth texture to the first area, and the second stitch configuration provides a texture to the second area that is rougher than the smooth texture.

22. The article of footwear recited in claim 21, wherein the second stitch configuration forms a rib structure in the second area.

23. The article of footwear recited in claim 20, wherein at least one of the first stitch configuration and the second stitch configuration forms an aperture in the textile element.

24. The article of footwear recited in claim 20, wherein the textile element is one of an exterior layer, an intermediate layer, and an interior layer of the upper.

25. The article of footwear recited in claim 20, wherein the upper includes an exterior layer, an intermediate layer, and an interior layer, and the textile element forms at least a portion of the interior layer.

26. The article of footwear recited in claim 20, wherein the textile layer forms at least a portion of both an interior surface and an exterior surface of the upper.

27. The article of footwear recited in claim 20, wherein the textile element forms an interior surface of the upper.

28. An article of footwear comprising:

an upper incorporating a textile element having edges that are joined together to form seams and define at least a portion of a void for receiving a foot, the seams including a first seam and a second seam, the first seam extending from a heel area to a forefoot area of the footwear along a lower surface of the upper, and the second seam extending vertically in the heel area; and

a sole structure secured to the upper.

29. The article of footwear recited in claim 28, wherein the footwear includes a third seam extending through the forefoot area of the upper.

30. The article of footwear recited in claim 28, wherein the textile element has a first area and a second area with a unitary construction, the first area being formed of a first stitch type, and the second area being formed of a second stitch type that is different from the first stitch type to impart varying properties to the textile element.

31. The article of footwear recited in claim 30, wherein at least one of the first stitch type and the second stitch type form an aperture in the textile element.

32. The article of footwear recited in claim 30, wherein the varying properties include varying elasticity of the textile element.

33. The article of footwear recited in claim 30, wherein the varying properties include varying air permeability of the textile element.

34. The article of footwear recited in claim 28, wherein the textile element is one of an exterior layer, an intermediate layer, and an interior layer of the upper.

35. The article of footwear recited in claim 28, wherein the textile layer forms at least a portion of both an interior surface and an exterior surface of the upper.

36. The article of footwear recited in claim 28, wherein the textile layer forms an interior surface of the footwear, and at least one additional layer forms an exterior surface of the footwear.

37. The article of footwear recited in claim 28, wherein the textile element is formed through a weft knitting process.

38. The article of footwear recited in claim 37, wherein the weft knitting process is one of circular knitting and flat knitting.

39. The article of footwear recited in claim 28, wherein the textile element is formed through a warp knitting process.

40. The article of footwear recited in claim 39, wherein the warp knitting process is jacquard double needle-bar raschel.

41. An article of footwear comprising:

an upper incorporating a textile element formed with a knitting machine, the textile element being removed from a textile structure that includes an outline of the textile element, and the textile element having edges that are joined together to define at least a portion of a void for receiving a foot; and

a sole structure secured to the upper.

42. The article of footwear recited in claim 41, wherein the knitting machine is a wide-tube circular knitting machine.

43. The article of footwear recited in claim 41, wherein the knitting machine is a jacquard double needle-bar raschel knitting machine.

44. The article of footwear recited in claim 41, wherein the edges include a pair of first edges that are joined to form a first seam extending longitudinally along a lower region of the upper.

45. The article of footwear recited in claim 44, wherein the edges include a pair of second edges that are joined to form a second seam extending along a heel region of the upper.

46. The article of footwear recited in claim 45, wherein the edges include at least a pair of third edges that are joined to form a second seam extending through a forefoot area of the upper.

47. The article of footwear recited in claim 41, wherein the textile element has a first area and a second area with a unitary construction, the first area being formed of a first stitch type, and the second area being formed of a second stitch type that is different from the first stitch type to impart varying textures to a surface of the textile element.

48. The article of footwear recited in claim 41, wherein the textile element is one of an exterior layer, an intermediate layer, and an interior layer of the upper.

49. The article of footwear recited in claim 41, wherein the textile element forms an interior surface of the upper.

50. A method of manufacturing an article of footwear, the method comprising steps of:

mechanically-manipulating a yarn with a circular knitting machine to form a cylindrical textile structure;

removing at least one textile element from the textile structure;

incorporating the textile element into an upper of the article of footwear.

51. The method recited in claim 50, wherein the step of mechanically-manipulating includes utilizing a wide-tube circular knitting machine.

52. The method recited in claim 50, wherein the step of mechanically-manipulating includes forming a texture in the cylindrical textile structure with a shape of the textile element.

53. The method recited in claim 50, wherein the step of mechanically manipulating includes forming the textile element to include a first area and a second area with a unitary construction, the first area being formed of a first stitch configuration, and the second area being formed of a second stitch configuration that is different from the first stitch configuration to impart varying textures to a surface of the textile element.

54. The method recited in claim 50, wherein the step of mechanically manipulating includes forming at least two textile elements in the cylindrical textile structure.

55. The method recited in claim 50, wherein the step of mechanically manipulating includes forming apertures in the textile element.

56. The method recited in claim 50, wherein the step of incorporating includes securing a first pair of edges of the textile element to each other to form a first seam that extends along a lower region of the upper.

57. The method recited in claim 56, wherein the step of incorporating further includes securing a second pair of edges of the textile element to each other to form a second seam that extends along a heel region of the upper.

58. A method of manufacturing an article of footwear, the method comprising steps of:

mechanically-manipulating a yarn with a knitting machine to form a textile structure having an outline of at least one textile element;

removing the textile element from the textile structure;

incorporating the textile element into an upper of the article of footwear.

59. The method recited in claim 58, wherein the step of mechanically-manipulating includes utilizing a wide-tube circular knitting machine.

60. The method recited in claim 59, wherein the step of mechanically-manipulating includes forming a texture in the cylindrical textile structure with a shape of the textile element.

61. The method recited in claim 58, wherein the step of mechanically-manipulating includes utilizing a jacquard double needle-bar raschel knitting machine.

62. The method recited in claim 58, wherein the step of mechanically manipulating includes forming the textile element to include a first area and a second area with a unitary construction, the first area being formed of a first stitch configuration, and the second area being formed of a second stitch configuration that is different from the first stitch configuration to impart varying textures to a surface of the textile element.

63. The method recited in claim 58, wherein the step of incorporating includes securing a first pair of edges of the textile element to each other to form a first seam that extends along a lower region of the upper.

64. The method recited in claim 58, wherein the step of incorporating further includes securing a second pair of edges of the textile element to each other to form a second seam that extends along a heel region of the upper.

65. An article of footwear comprising:

an upper incorporating a textile element formed through a flat knitting process, the textile element having a first area and a second area with a unitary construction, the first area having a first set of properties, and the second area having a second set of properties that are different from the first set of properties to impart varying characteristics to the textile element; and

a sole structure secured to the upper.

66. The article of footwear recited in claim 65, wherein the first set of properties and the second set of properties are at least one of a stitch configuration and a yarn type.

67. The article of footwear recited in claim 65, wherein the textile element is one of an exterior layer, an intermediate layer, and an interior layer of the upper.

* * * * *