US009060562B2

(12) **United States Patent**
Meir et al.

(10) **Patent No.: US 9,060,562 B2**
(45) **Date of Patent: Jun. 23, 2015**

(54) **METHOD OF KNITTING A KNITTED COMPONENT WITH AN INTEGRAL KNIT TONGUE**

(71) Applicant: **Nike, Inc.**, Beaverton, OR (US)

(72) Inventors: **Adrain Meir**, Portland, OR (US); **Daniel A. Podhajny**, Beaverton, OR (US); **Daren P. Tatler**, Hillsboro, OR (US)

(73) Assignee: **NIKE, Inc.**, Beaverton, OR (US)

(*) Notice: Subject to any disclaimer, the term of this patent is extended or adjusted under 35 U.S.C. 154(b) by 141 days.

(21) Appl. No.: **13/781,551**

(22) Filed: **Feb. 28, 2013**

(65) **Prior Publication Data**

US 2013/0239625 A1 Sep. 19, 2013

Related U.S. Application Data

(63) Continuation-in-part of application No. 13/400,511, filed on Feb. 20, 2012, now Pat. No. 8,448,474.

(51) **Int. Cl.**
D04B 7/30 (2006.01)
A43B 1/04 (2006.01)
(Continued)

(52) **U.S. Cl.**
CPC ... ***A43B 1/04*** (2013.01); ***D04B 1/24*** (2013.01); ***A43B 23/0245*** (2013.01); ***A43B 23/0265*** (2013.01); ***A43B 23/26*** (2013.01); ***D04B 1/22*** (2013.01); ***D04B 15/56*** (2013.01); *D10B 2403/02411* (2013.01); *D10B 2403/032* (2013.01); *D10B 2501/043* (2013.01); ***A43B 23/0205*** (2013.01); ***D04B 7/28*** (2013.01); *D10B 2403/0113* (2013.01)

(58) **Field of Classification Search**
CPC D04B 1/24; D04B 2401/043; D04B 2403/032; A43B 1/04; A43B 23/0245; A43B 23/26
USPC ..... 66/169 R, 170, 171, 177; 2/3 R, 3 A, 84, 2/114, 47
See application file for complete search history.

(56) **References Cited**

U.S. PATENT DOCUMENTS

601,192 A 3/1898 Woodside
1,215,198 A 2/1917 Rothstein
(Continued)

FOREIGN PATENT DOCUMENTS

CN 1782156 6/2006
CN 102271548 12/2011
(Continued)

OTHER PUBLICATIONS

Declaration of Dr. Edward C. Frederick from the US Patent and Trademark Office Inter Partes Review of US Patent No. 7,347,011 (178 pp).
(Continued)

Primary Examiner — Danny Worrell
(74) *Attorney, Agent, or Firm* — Plumsea Law Group, LLC

(57) **ABSTRACT**

Methods of manufacturing a knitted component for an article of footwear that include knitting an upper with an integral knit tongue during a knitting process on a knitting machine are described. The knitting process forms the integral knit tongue of unitary knit construction with the upper so that the integral knit tongue extends through a throat area of the knitted component. The integral knit tongue can include raised elements formed of unitary knit construction with the tongue.

23 Claims, 28 Drawing Sheets

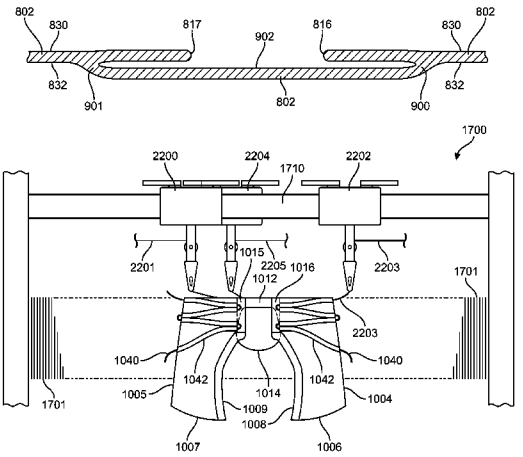

(51) **Int. Cl.**

D04B 1/24	(2006.01)
A43B 23/02	(2006.01)
A43B 23/26	(2006.01)
D04B 1/22	(2006.01)
D04B 15/56	(2006.01)
D04B 7/28	(2006.01)

(56) **References Cited**

U.S. PATENT DOCUMENTS

1,597,934	A	8/1926	Stimpson
1,888,172	A	11/1932	Joha
1,902,780	A	3/1933	Holden
1,910,251	A	5/1933	Joha
2,001,293	A	5/1935	Wilson
2,047,724	A	7/1936	Zuckerman
2,147,197	A	2/1939	Glidden
2,314,098	A	3/1943	McDonald
2,330,199	A	9/1943	Basch
2,343,390	A	3/1944	Ushakoff
2,400,692	A	5/1946	Herbert
2,440,393	A	4/1948	Clark
2,569,764	A	10/1951	Jonas
2,586,045	A	2/1952	Hoza
2,608,078	A	8/1952	Anderson
2,641,004	A	6/1953	Whiting et al.
2,675,631	A	4/1954	Doughty
3,694,940	A	10/1972	Stohr
3,704,474	A	12/1972	Winkler
3,766,566	A	10/1973	Tadokoro
3,778,856	A	12/1973	Christie
3,583,081	A	6/1974	Hayashi
3,952,427	A	4/1976	Von den Benken
3,972,086	A	8/1976	Belli
4,027,402	A	6/1977	Liu
4,031,586	A	6/1977	Von den Benken
4,211,806	A	7/1980	Civardi
4,255,949	A	3/1981	Thorneburg
4,317,292	A	3/1982	Melton
4,373,361	A	2/1983	Thorneburg
4,447,967	A	5/1984	Zaino
4,465,448	A	8/1984	Aldridge
4,499,741	A	2/1985	Harris
4,607,439	A	8/1986	Sogabe et al.
4,737,396	A	4/1988	Kamat
4,750,339	A	6/1988	Simpson et al.
4,756,098	A	7/1988	Boggia
4,785,558	A	11/1988	Shiomura
4,813,158	A	3/1989	Brown
5,095,720	A	3/1992	Tibbals
5,152,025	A	10/1992	Hirmas
5,192,601	A	3/1993	Neisler
5,345,638	A	9/1994	Nishida
5,353,524	A	10/1994	Brier
5,461,884	A	10/1995	McCartney
5,511,323	A	4/1996	Dahlgren
5,572,860	A	11/1996	Mitsumoto
5,575,090	A	11/1996	Condini
5,729,918	A	3/1998	Smets
5,735,145	A	4/1998	Pernick
5,746,013	A	5/1998	Fay
5,823,012	A	10/1998	Hacskaylo
6,308,438	B1	10/2001	Throneburg
6,321,574	B1	11/2001	Marker et al.
6,333,105	B1	12/2001	Tanaka et al.
6,401,364	B1	6/2002	Burt
6,558,784	B1	5/2003	Norton
6,588,237	B2	7/2003	Cole
6,910,288	B2	6/2005	Dua
6,931,762	B1	8/2005	Dua
7,051,460	B2	5/2006	Orei
7,056,402	B2	6/2006	Koerwien
7,347,011	B2	3/2008	Dua
7,441,348	B1	10/2008	Dawson
7,682,219	B2	3/2010	Falla
7,752,775	B2	7/2010	Lyden
7,770,306	B2	8/2010	Lyden
7,774,956	B2	8/2010	Dua
7,814,598	B2	10/2010	Dua
8,196,317	B2	6/2012	Dua
8,215,033	B2	7/2012	Carboy
8,225,530	B2	7/2012	Sokolowski
8,266,749	B2	9/2012	Dua
8,490,299	B2 *	7/2013	Dua et al. 36/50.1
8,621,891	B2 *	1/2014	Dua et al. 66/177
8,650,916	B2 *	2/2014	Dua et al. 66/177
8,745,895	B2 *	6/2014	Sokolowski et al. 36/50.1
8,800,172	B2 *	8/2014	Dua et al. 36/50.1
2002/0078599	A1	6/2002	Delgorgue
2002/0148258	A1	10/2002	Cole et al.
2003/0126762	A1	7/2003	Tseng
2003/0191427	A1	10/2003	Jay
2003/0200679	A1	10/2003	Wilson
2004/0118018	A1	6/2004	Dua
2005/0115284	A1	6/2005	Dua
2005/0193592	A1	9/2005	Dua
2005/0284000	A1	12/2005	Kerns
2007/0180730	A1	8/2007	Greene
2007/0294920	A1	12/2007	Baychar
2008/0017294	A1	1/2008	Bailey
2008/0110048	A1	5/2008	Dua
2008/0189830	A1	8/2008	Egglesfield
2008/0313939	A1	12/2008	Ardill
2009/0068908	A1	3/2009	Hinchcliff
2010/0051132	A1	3/2010	Glenn
2010/0154256	A1	6/2010	Dua
2010/0170651	A1	7/2010	Scherb
2011/0078921	A1	4/2011	Greene
2011/0185592	A1	8/2011	Nishiwaki
2012/0011744	A1	1/2012	Bell
2012/0233882	A1	9/2012	Huffa
2012/0233884	A1	9/2012	Greene
2012/0240429	A1	9/2012	Sokolowski
2012/0255201	A1	10/2012	Little

FOREIGN PATENT DOCUMENTS

DE	870963	C	3/1953
DE	1084173		6/1960
DE	19738433		4/1998
DE	19728848		1/1999
EP	0448714		10/1991
EP	0728860		8/1996
EP	0758693		2/1997
EP	1233091		8/2002
EP	1563752	A1	8/2005
FR	2171172		9/1973
GB	538865		8/1941
GB	1603487		11/1981
JP	H06113905		4/1994
JP	H08109553		4/1996
JP	H11302943		11/1999
JP	2005160697		6/2005
NL	7304678		10/1974
WO	9003744		4/1990
WO	0032861		6/2000
WO	0231247		4/2002
WO	2013126313		8/2013

OTHER PUBLICATIONS

David J. Spencer, Knitting Technology: A Comprehensive Handbook and Practical Guide (Third ed., Woodhead Publishing Ltd. 2001) (413 pp).

Excerpt of Hannelore Eberle et al., Clothing Technology (Third English ed., Beuth-Verlag GmnH 2002) (book cover and back; pp. 2-3, 83).

(56) **References Cited**

OTHER PUBLICATIONS

Letter from Bruce Huffa dated Dec. 23, 2013 (71 pages).
Non-Final Office Action mailed Oct. 17, 2012 in U.S. Appl. No. 13/400,511.
Non-Final Office Action mailed Dec. 19, 2012 in U.S. Appl. No. 13/474,531.
Notice of Allowance mailed Jan. 31, 2013 in U.S. Appl. No. 13/400,511.
International Search Report and Written Opinion mailed Jul. 30, 2014 in International Application No. PCT/US2014/018845.
Taiwanese Office Action dated Nov. 14, 2014 in Taiwanese Patent Application No. 102105769.
International Search Report and Written Opinion mailed Jun. 20, 2014 in International Application No. PCT/US2014/018852.

* cited by examiner

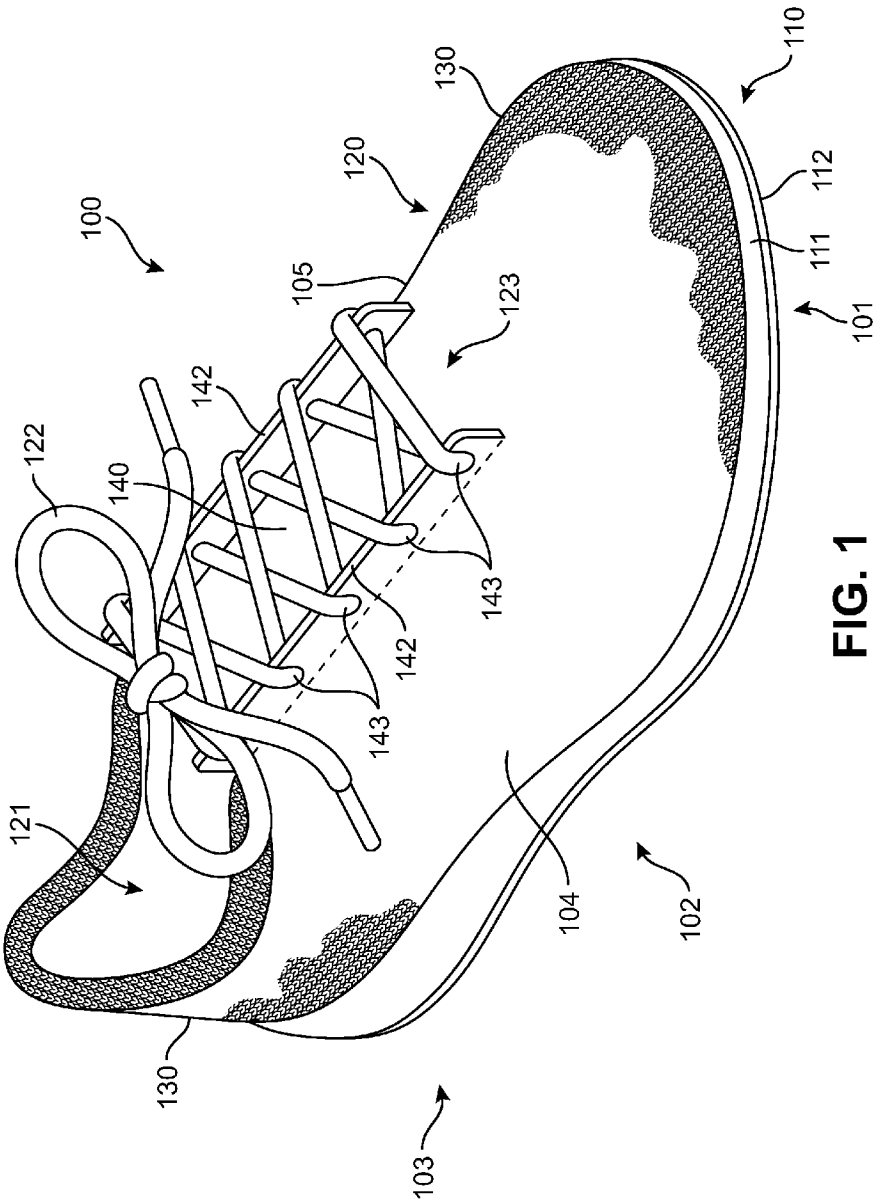
100
101
102
103
104
105
110
111
112
120
121
122
123
130
130
140
142
142
143
143

FIG. 1

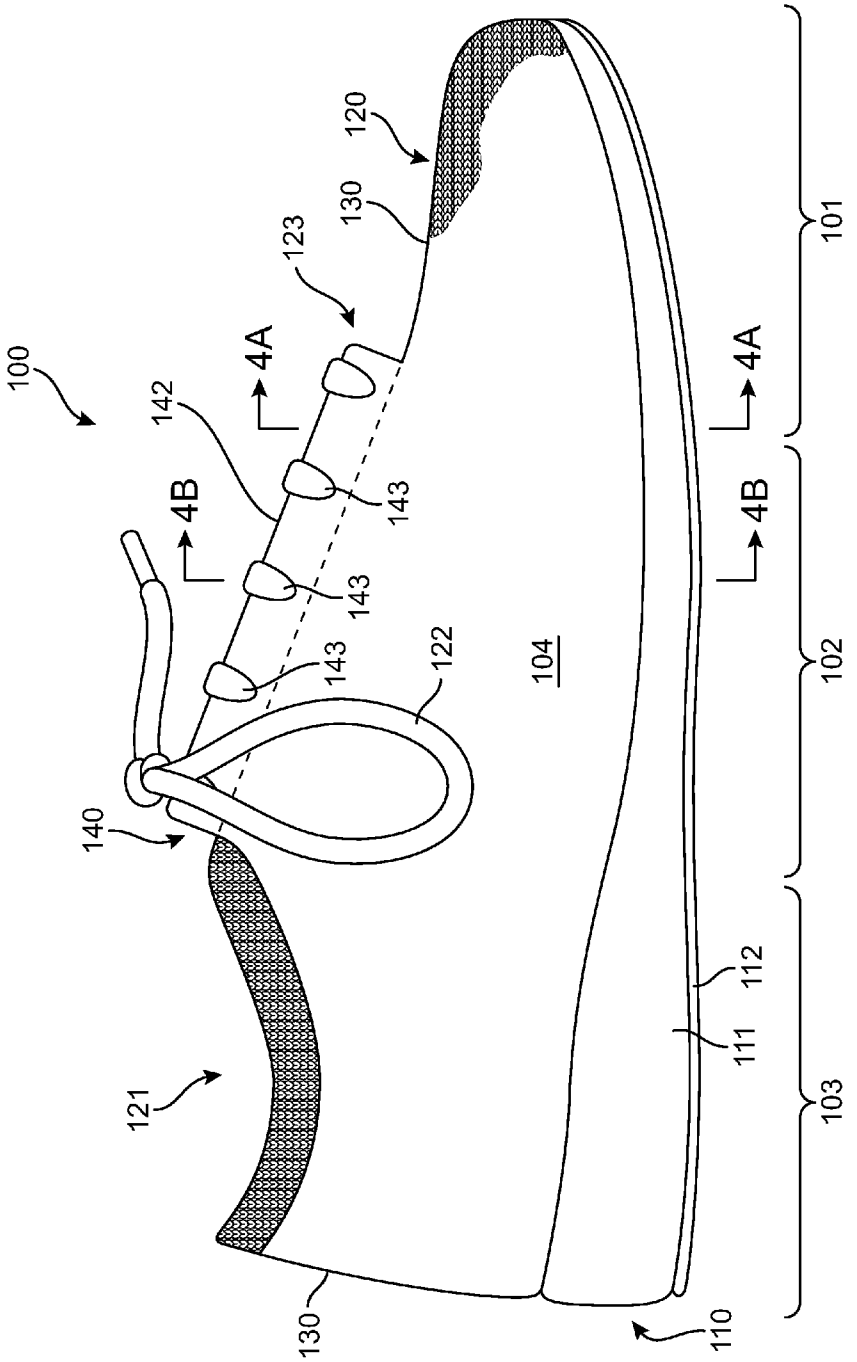
100
120
130
123
142
4A
4B
143
143
143
122
104
140
121
130
110
111
112
101
102
103
4A
4B

FIG. 2

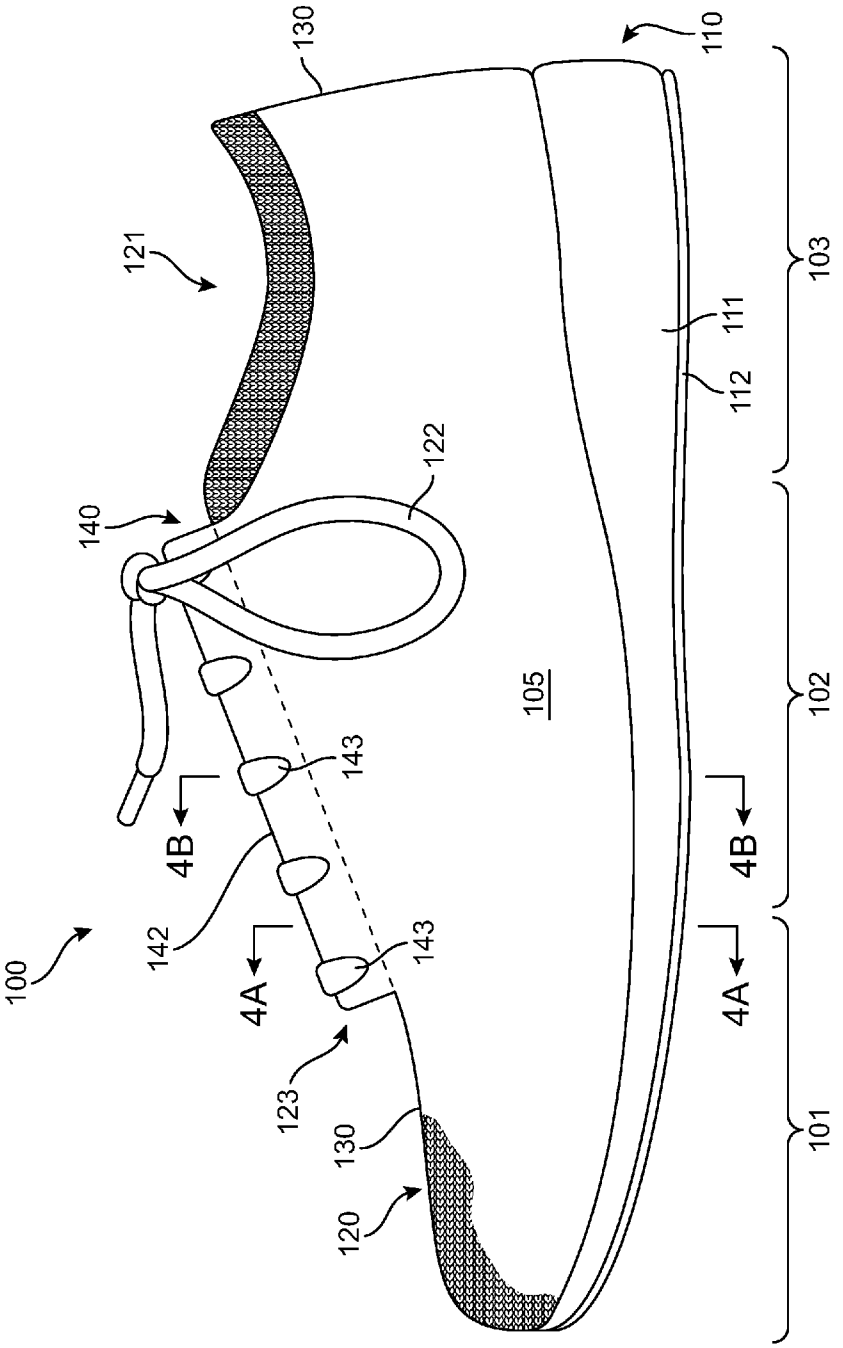
130
110
121
103
111
112
122
140
105
102
143
4B
4B
142
143
100
4A
4A
123
130
101
120

FIG. 3

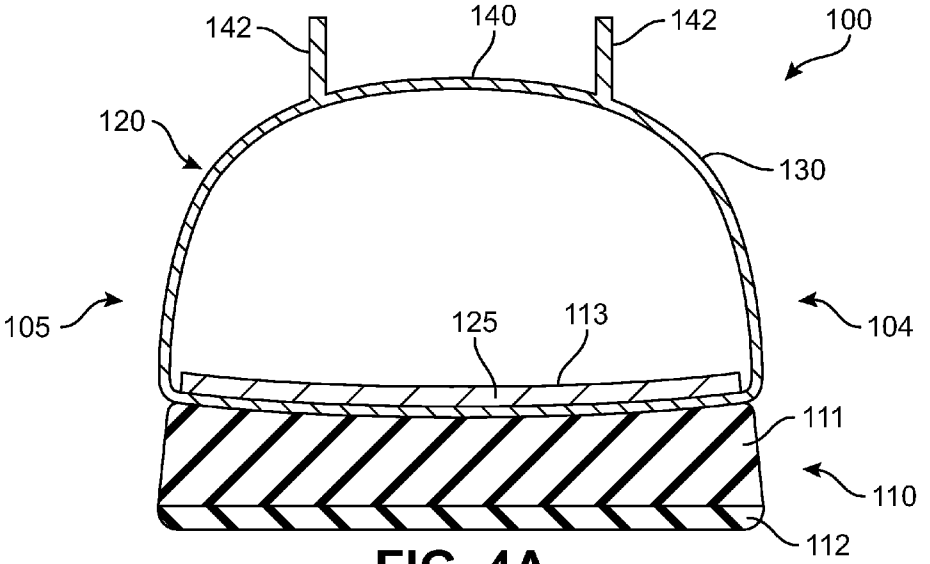
142
140
142
100
120
130
105
125
113
104
111
110
112

FIG. 4A

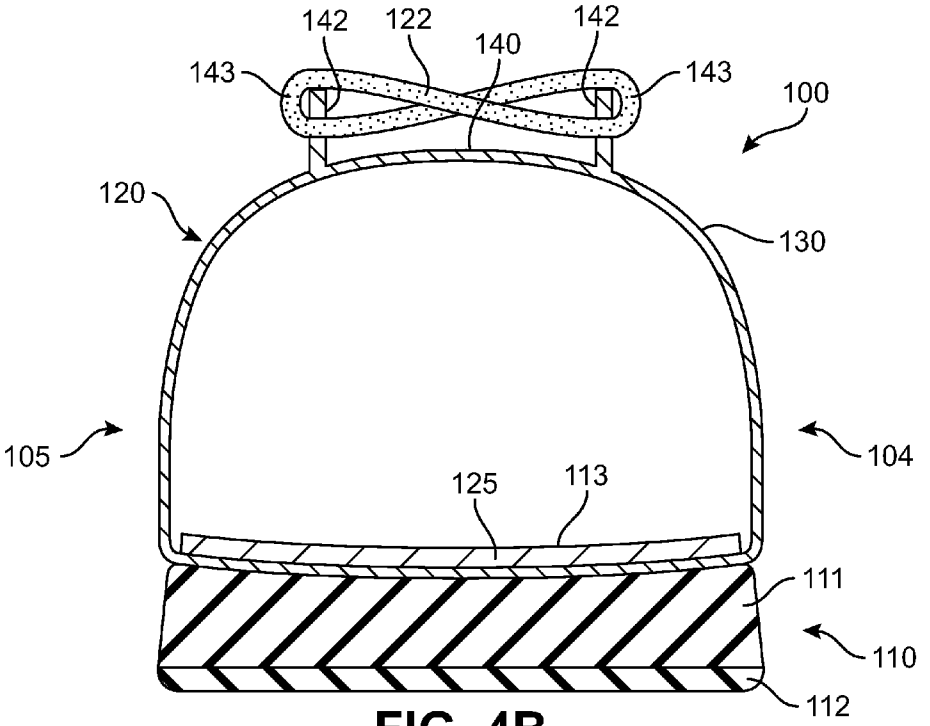
142
122
140
142
143
143
100
120
130
105
125
113
104
111
110
112

FIG. 4B

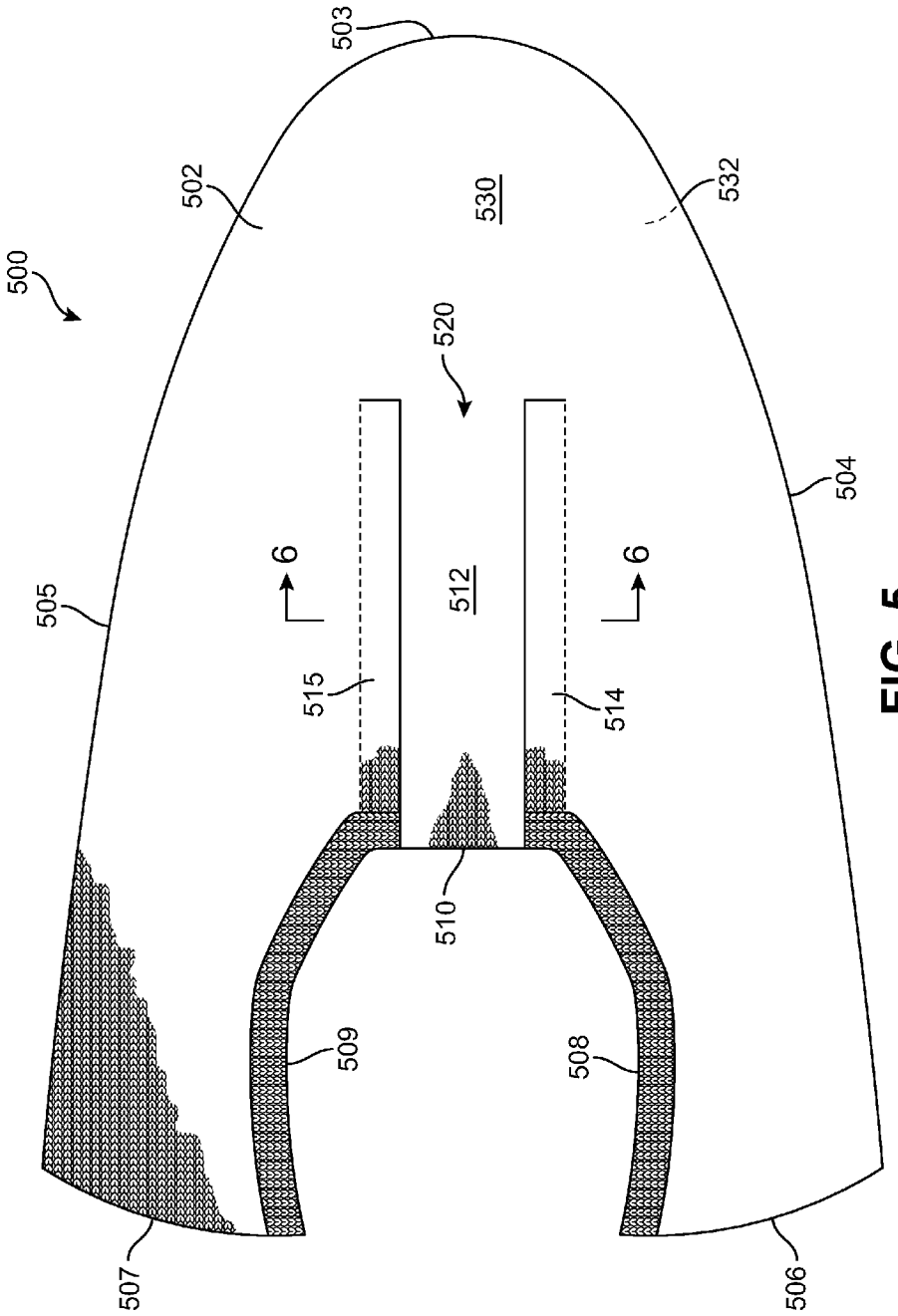
500
502
503
504
505
506
507
508
509
510
512
514
515
520
530
532
6
6

FIG. 5

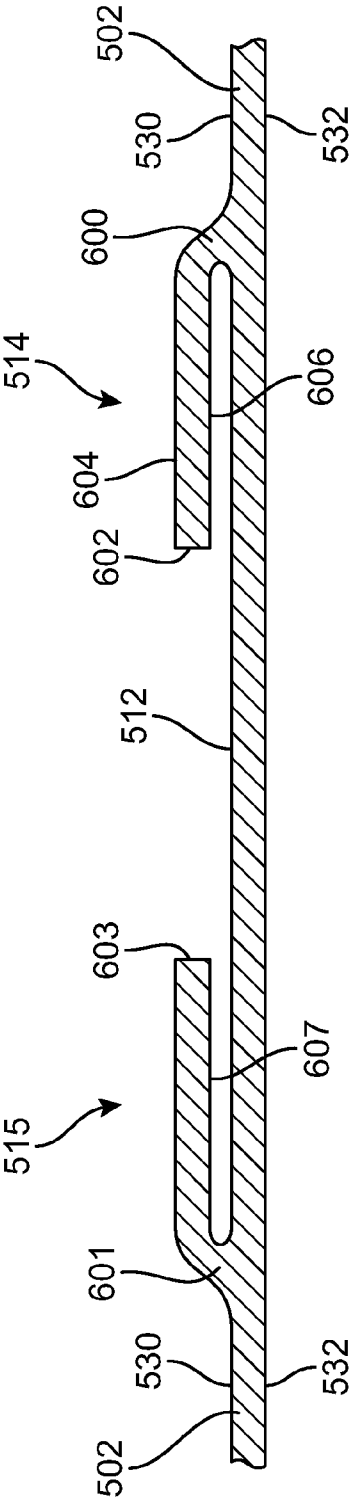

FIG. 6

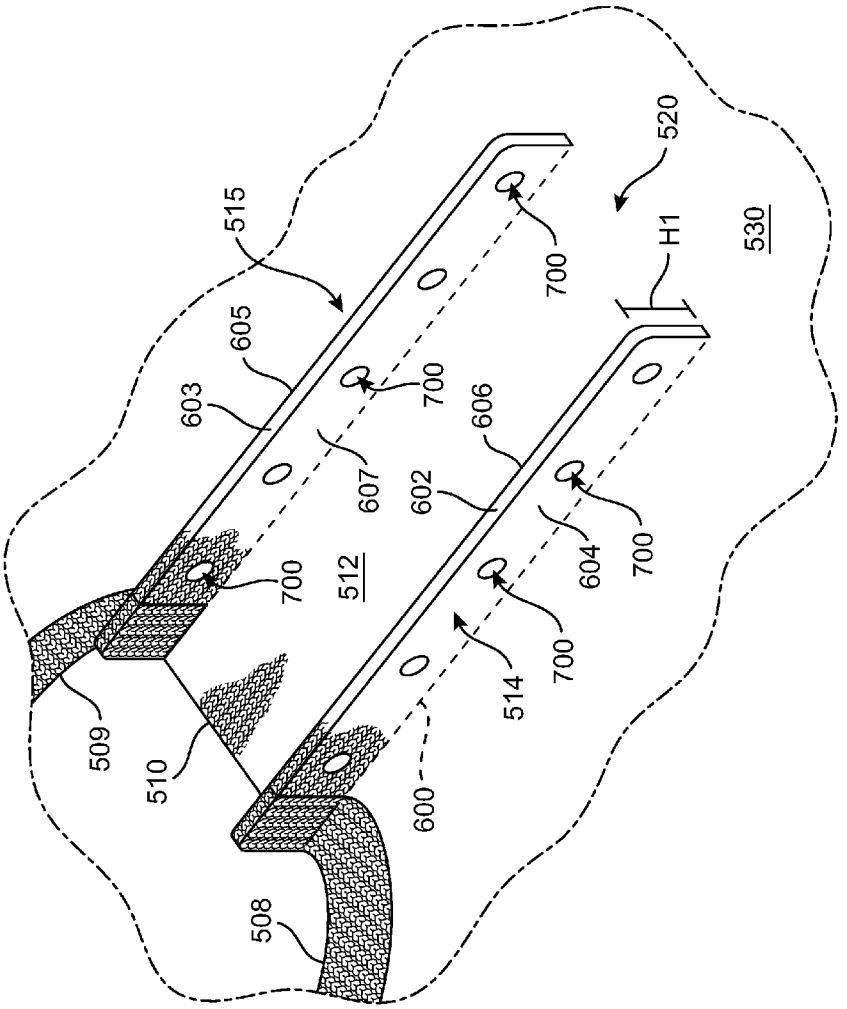
515
520
530
H1
605
603
700
607
606
602
604
512
514
509
510
600
508

FIG. 7

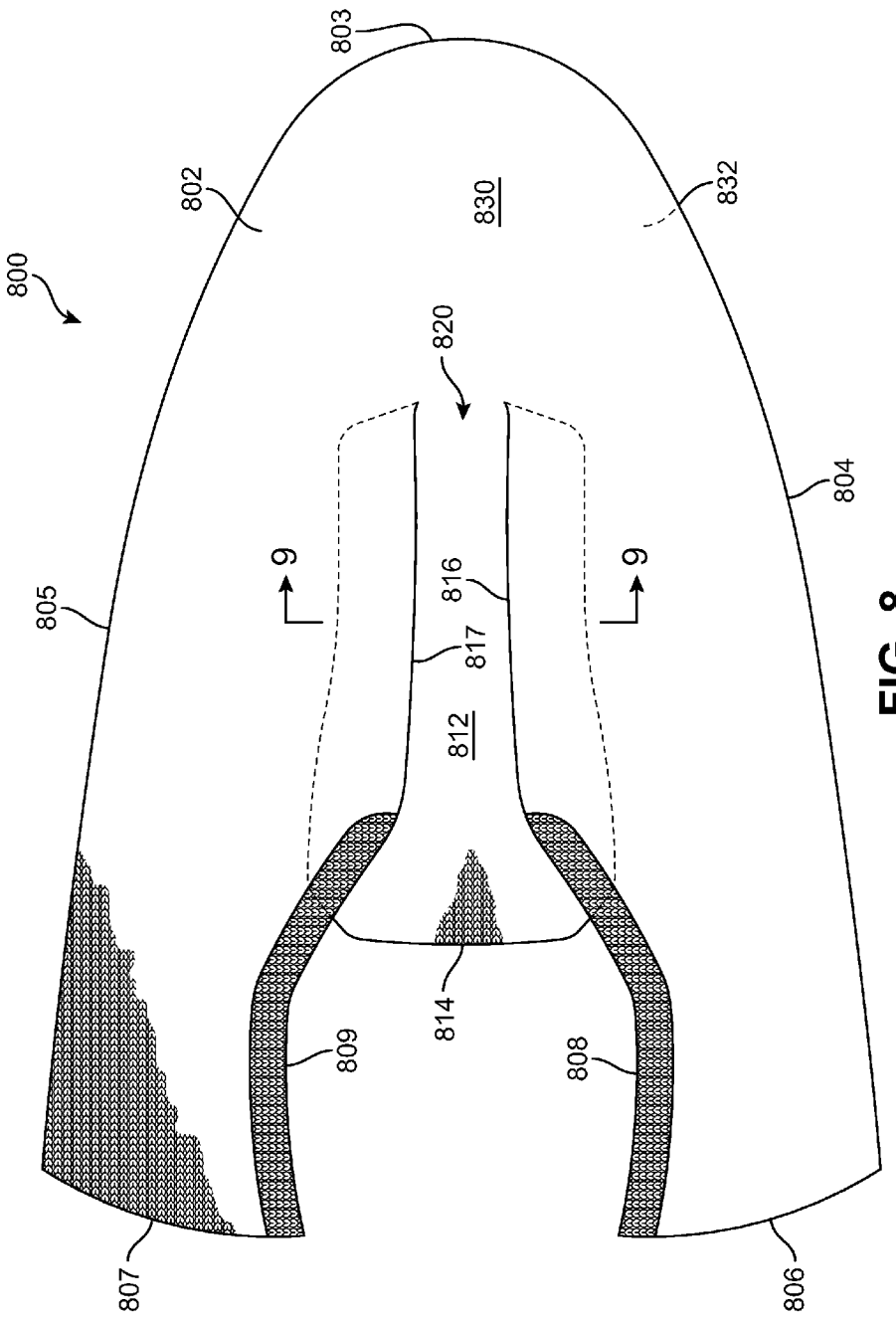
800
803
802
830
832
820
805
804
9
9
816
817
812
814
809
808
807
806

FIG. 8

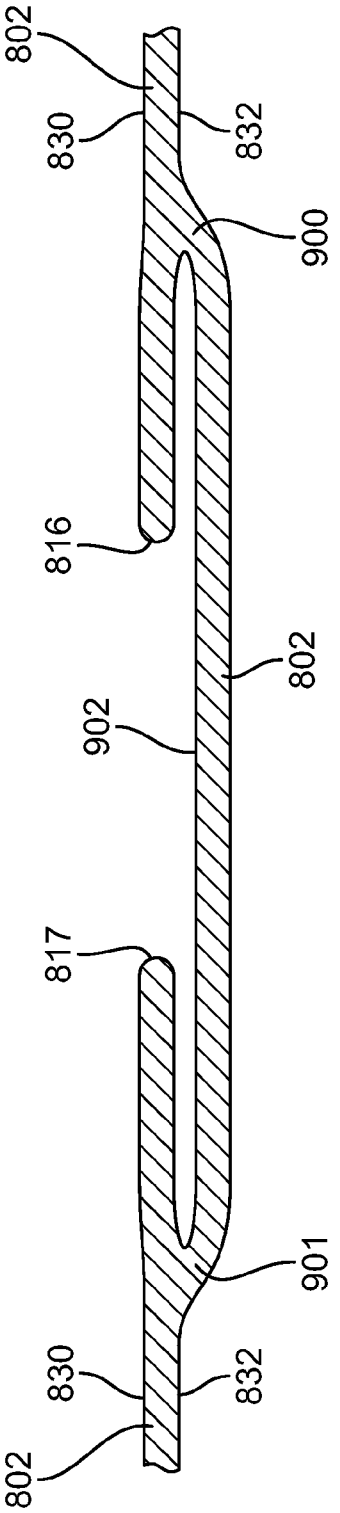

FIG. 9

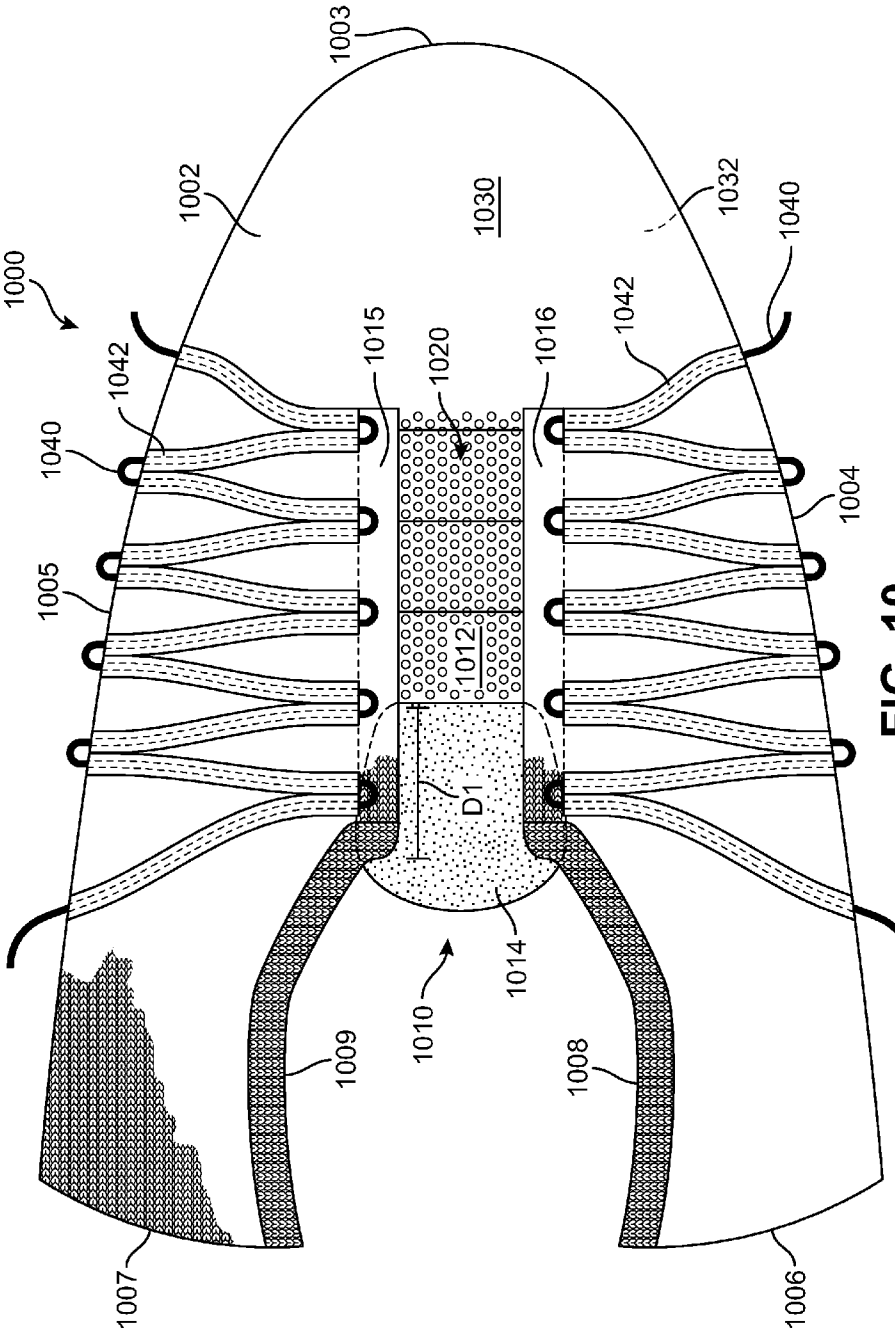
1000
1002
1003
1004
1005
1006
1007
1008
1009
1010
1012
1014
1015
1016
1020
1030
1032
1040
1042
D1

FIG. 10

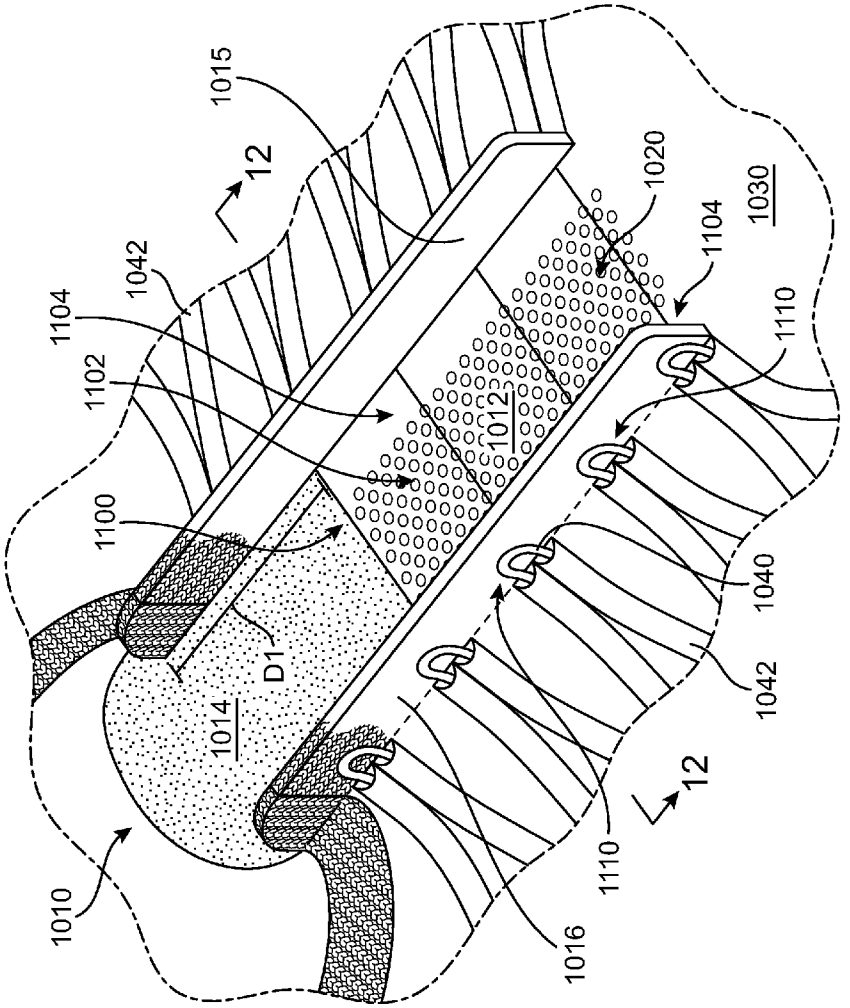
1015
12
1042
1104
1102
1100
1020
1104
1030
1110
1012
1040
1042
D1
1014
1010
1110
1016
12

FIG. 11

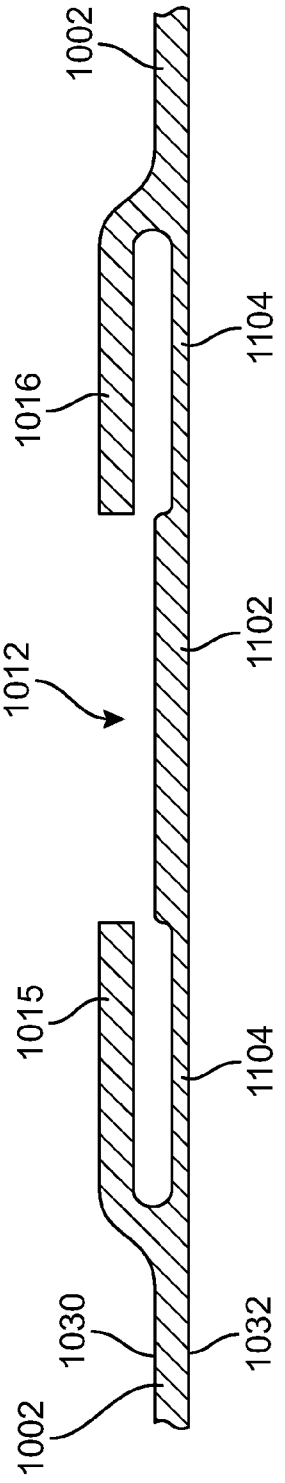

FIG. 12

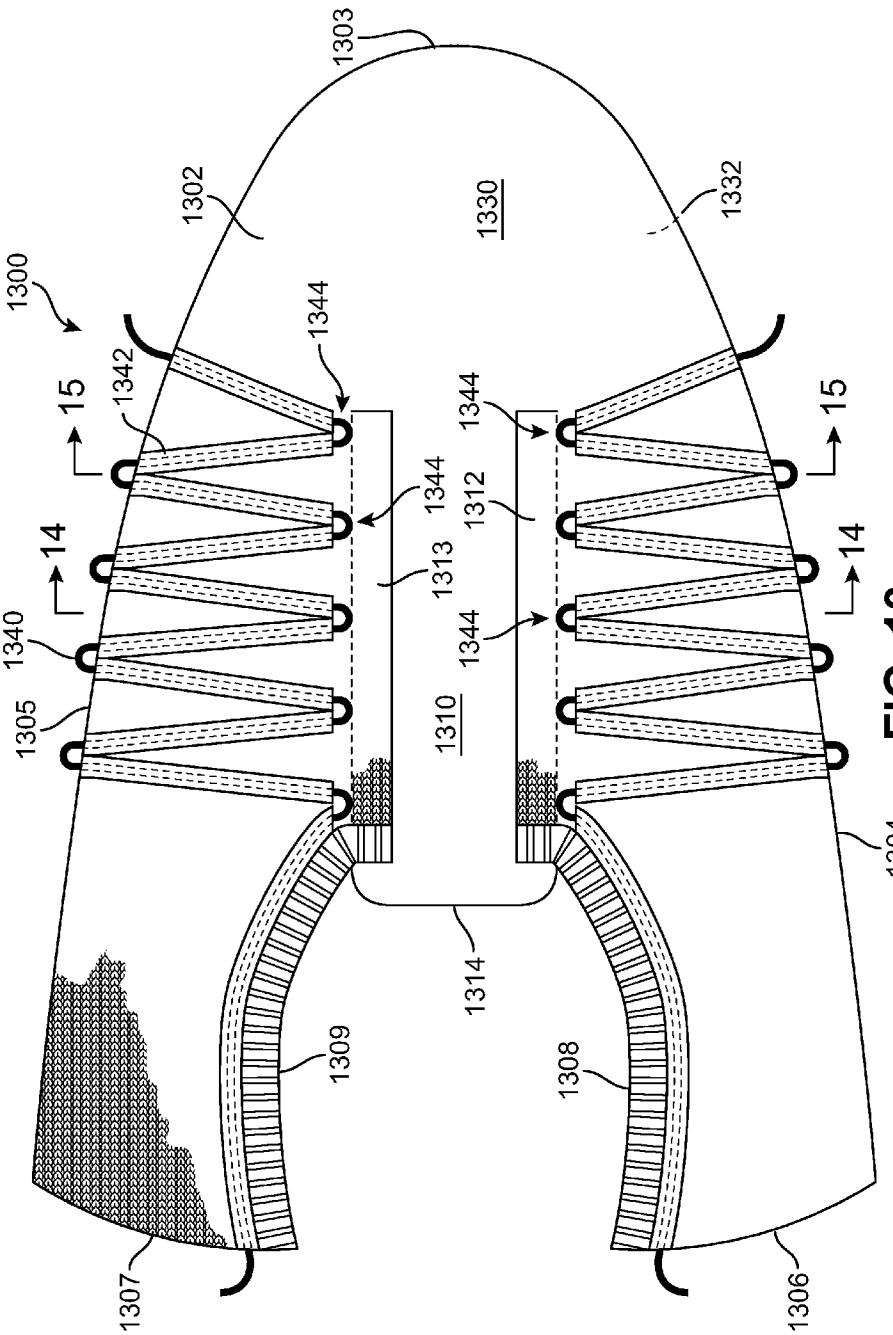
1300
1302
1303
1304
1305
1306
1307
1308
1309
1310
1312
1313
1314
1330
1332
1340
1342
1344
14
15

FIG. 13

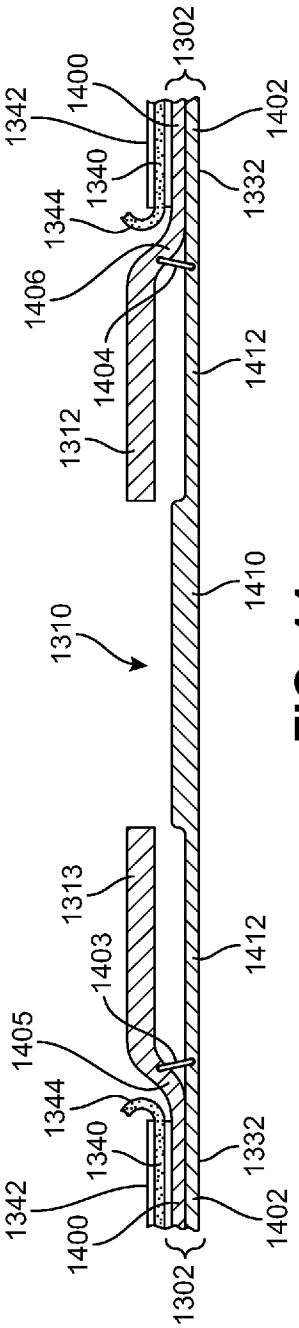
1342
1400
1302
1402
1340
1332
1344
1406
1404
1412
1312
1410
1310
1313
1403
1405

FIG. 14

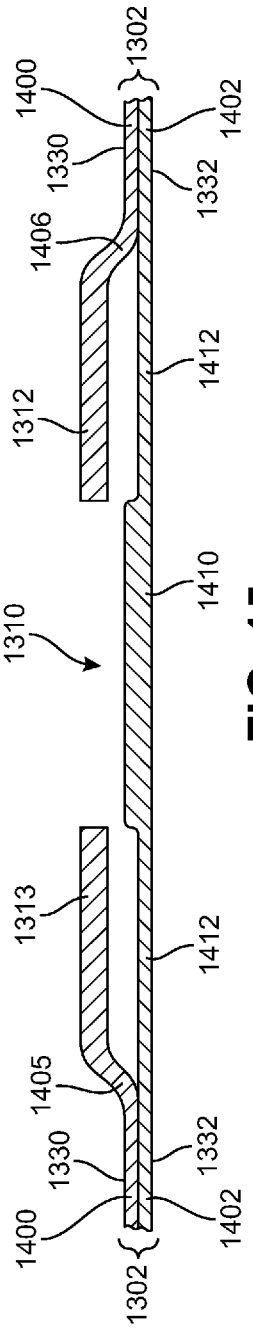
1400
1302
1402
1330
1332
1406
1412
1312
1410
1310
1313
1405

FIG. 15

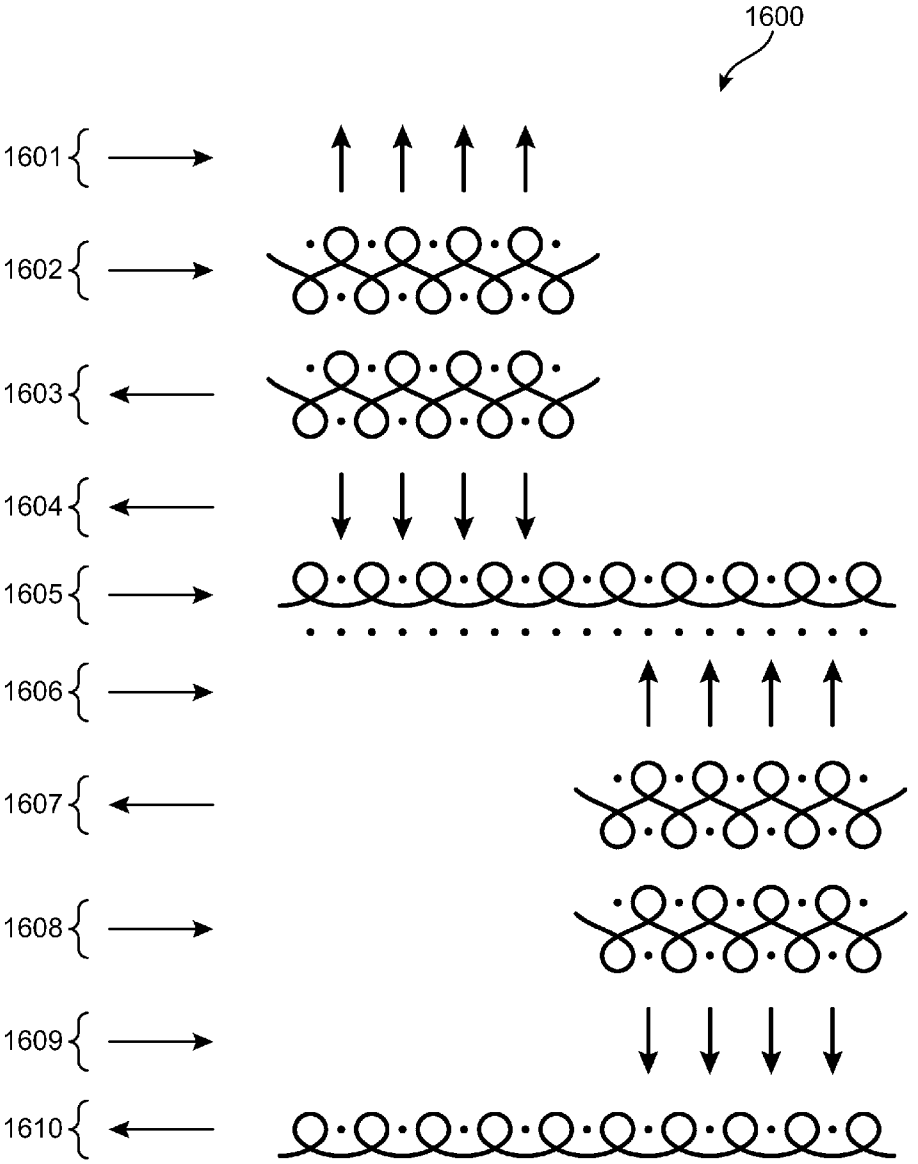

FIG. 16

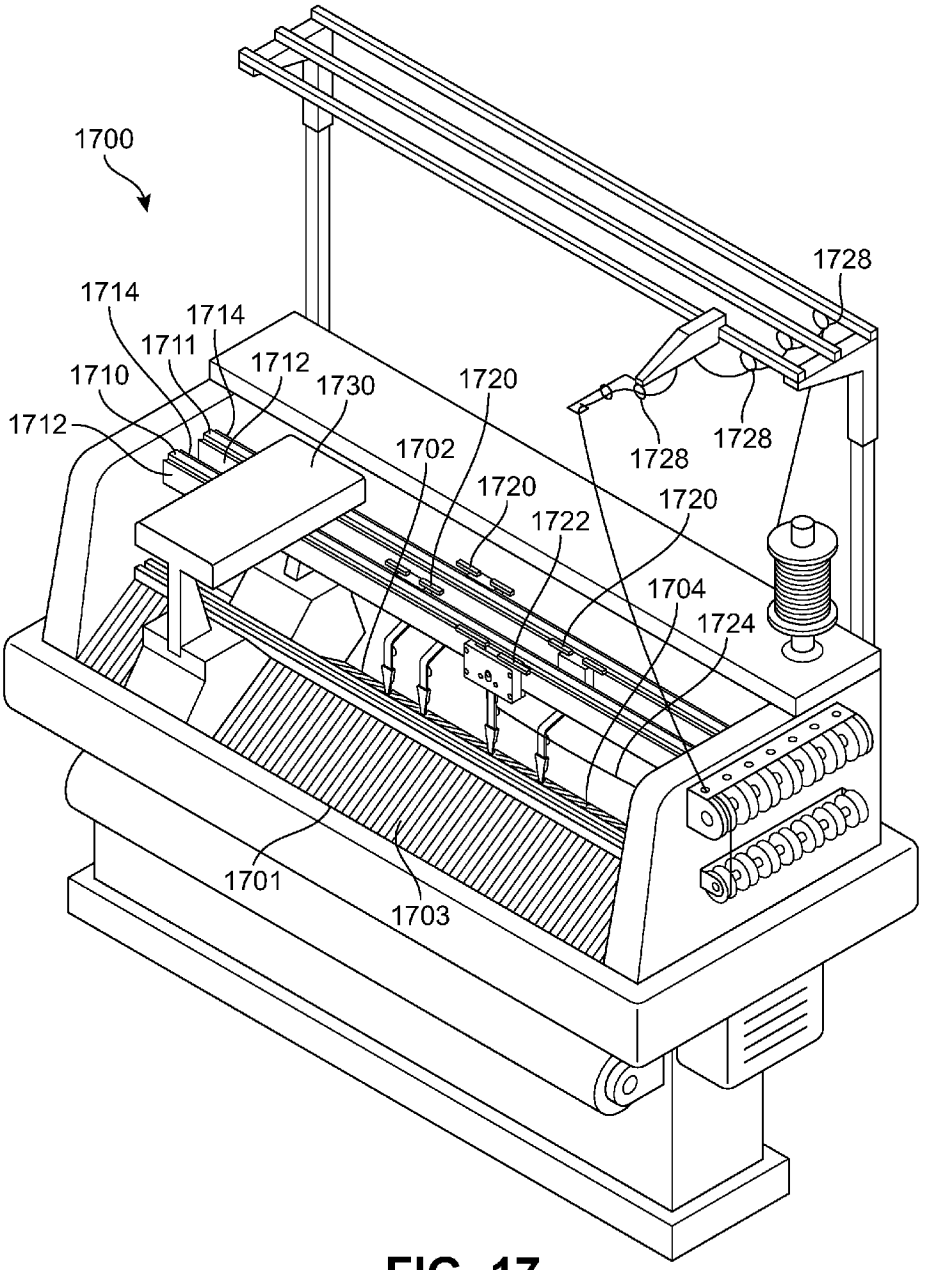
1700
1714
1714
1711
1712
1710
1730
1720
1712
1728
1728
1728
1702
1720
1720
1722
1704
1724
1701
1703

FIG. 17

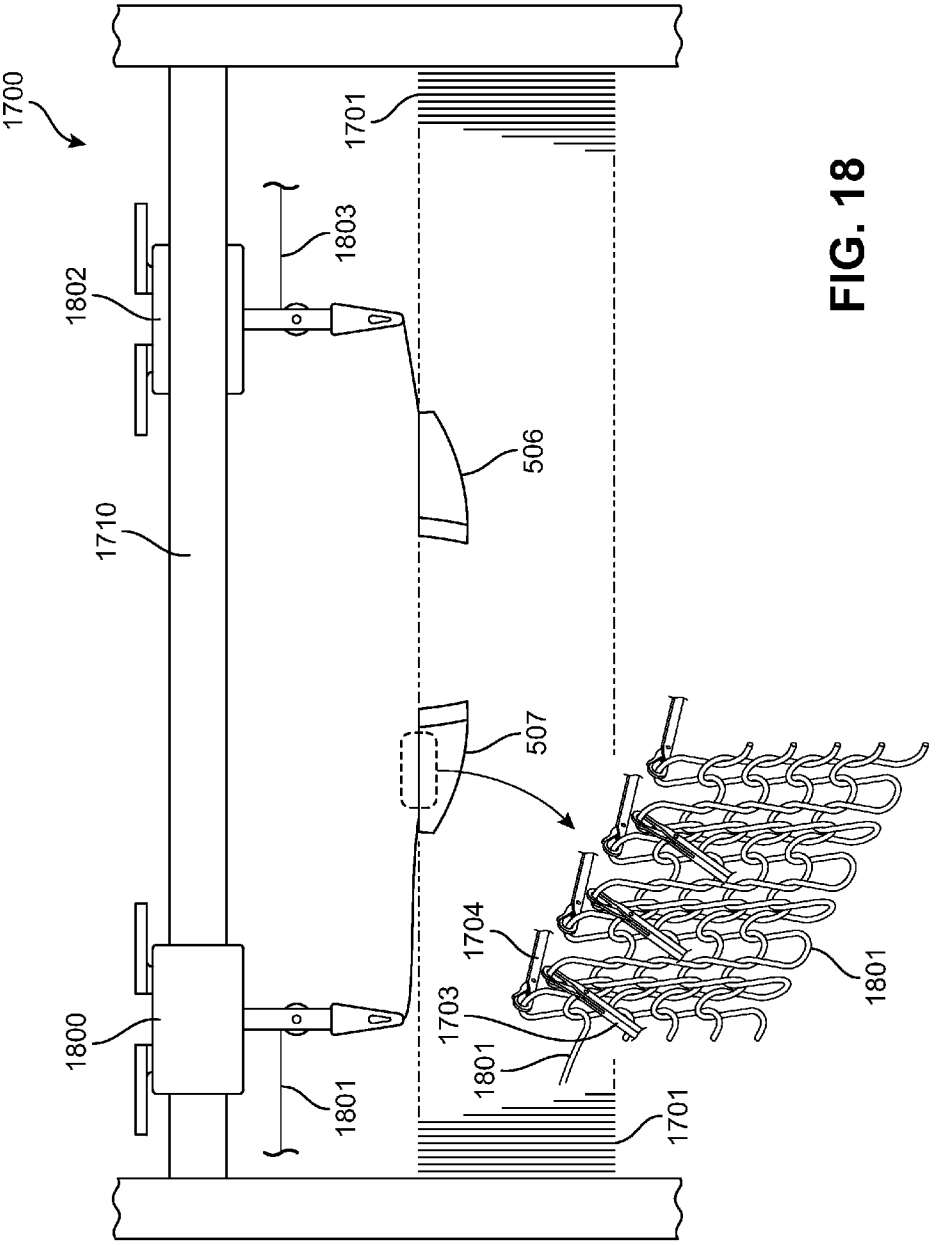
1700
1701
1803
1802
506
1710
507
1704
1801
1703
1801
1800
1801
1701

FIG. 18

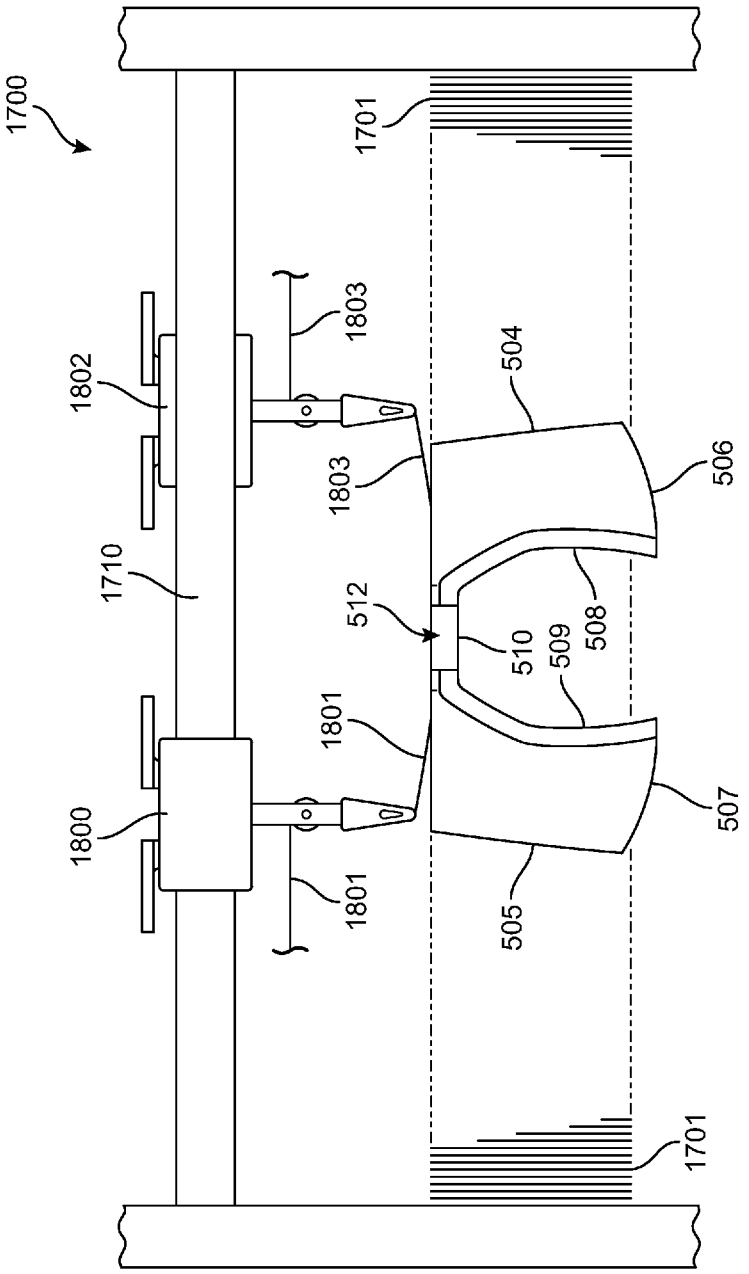
1700
1701
1803
1802
504
1803
506
1710
512
510
509
508
1801
1800
507
1801
505
1701

FIG. 19

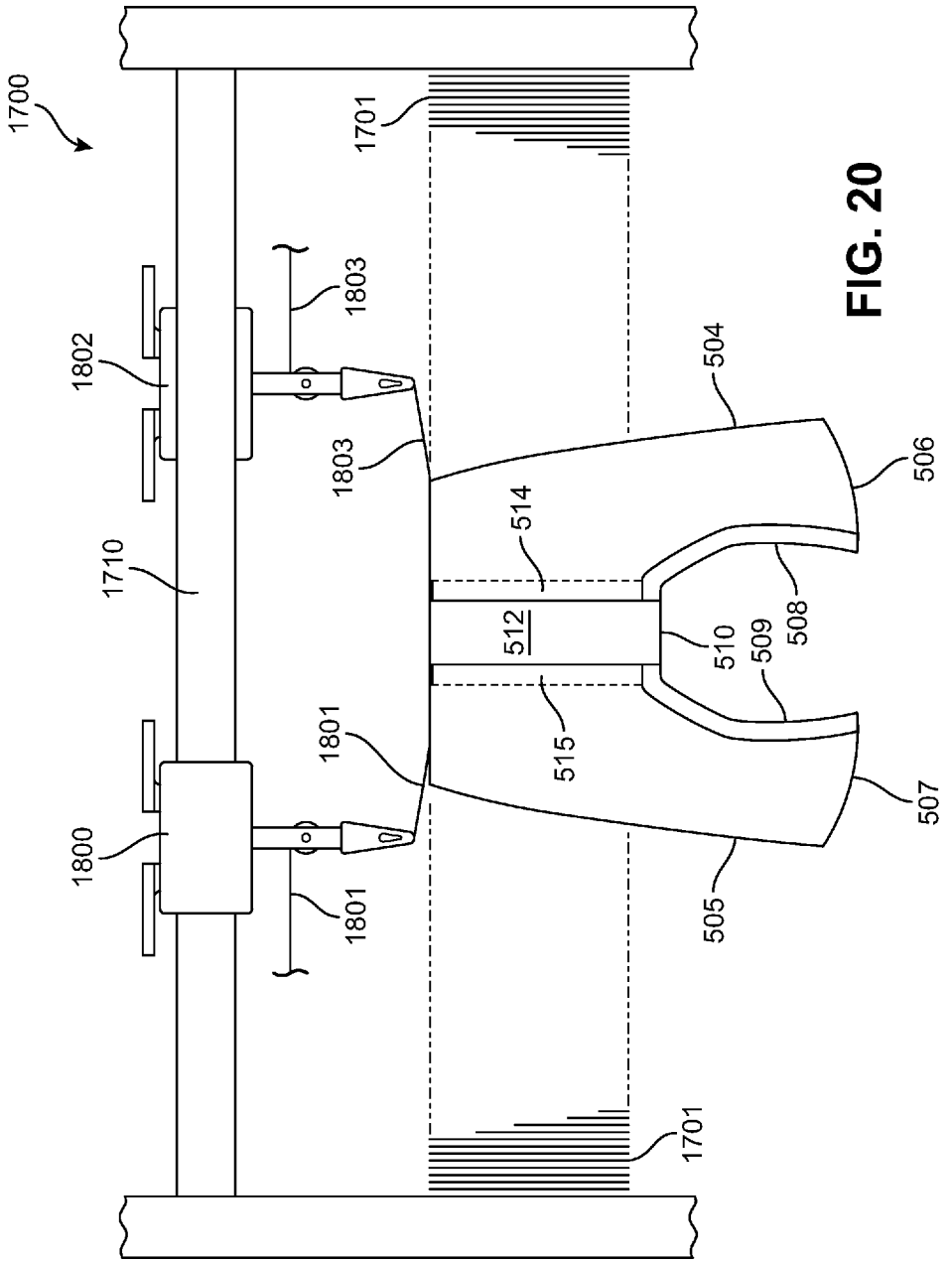
1700
1701
1803
1802
1803
504
506
514
1710
512
510
509
508
1801
515
507
1800
1801
505
1701

FIG. 20

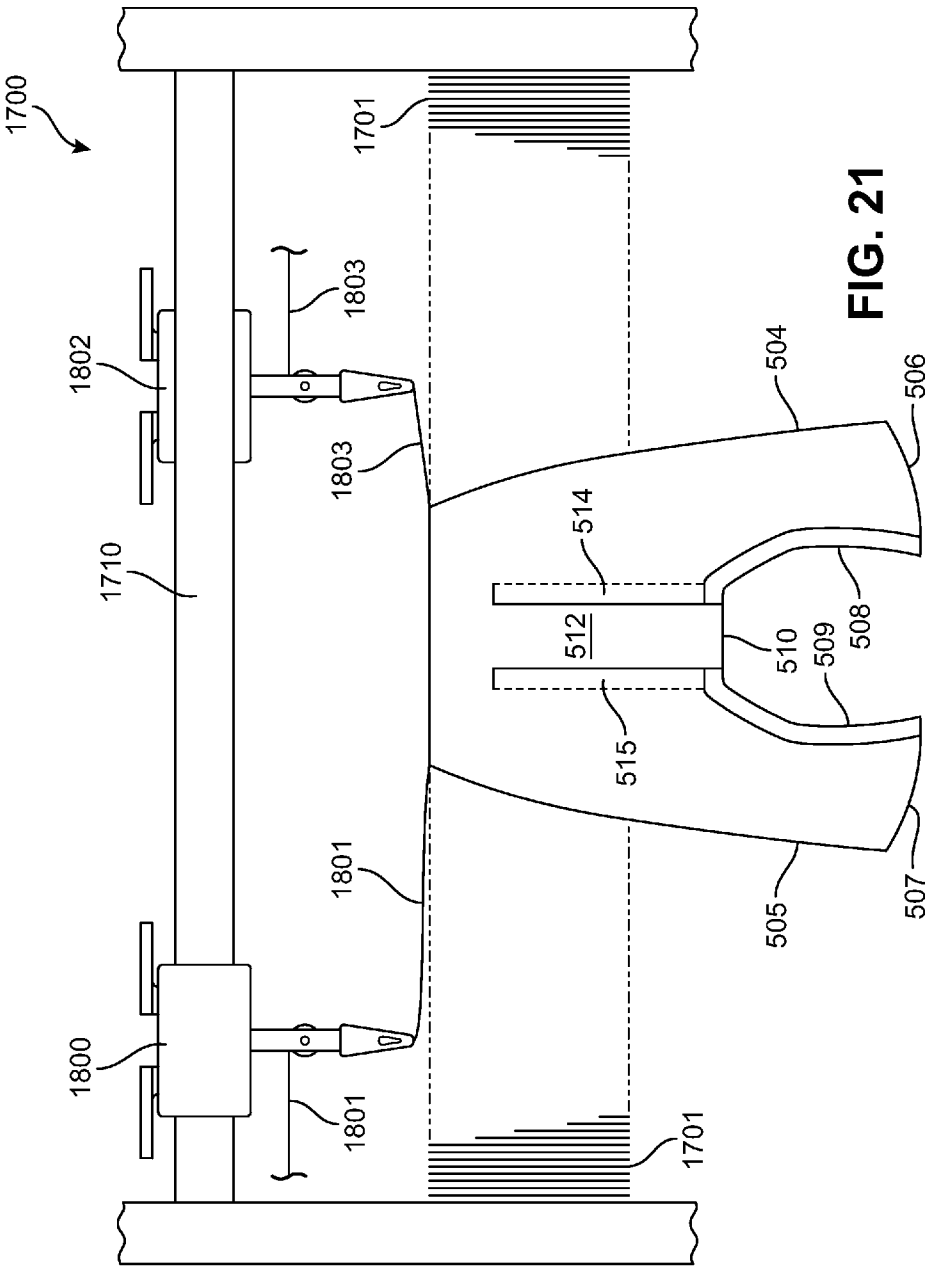
1700
1710
1800
1801
1802
1803
1701
504
505
506
507
508
509
510
512
514
515

FIG. 21

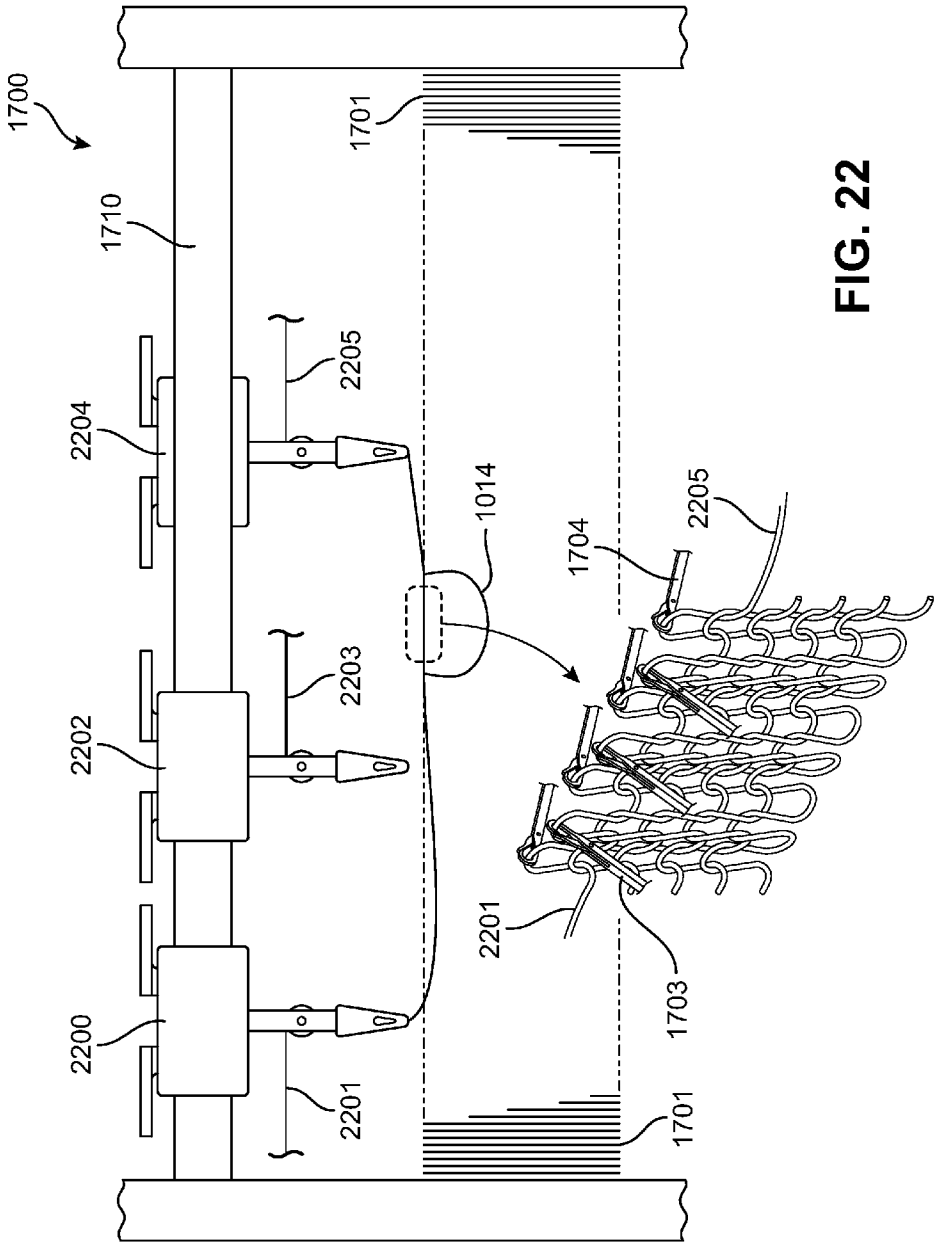
1700
1710
2204
2202
2200
2205
2203
2201
1014
1701
1704
2205
2201
1703
1701

FIG. 22

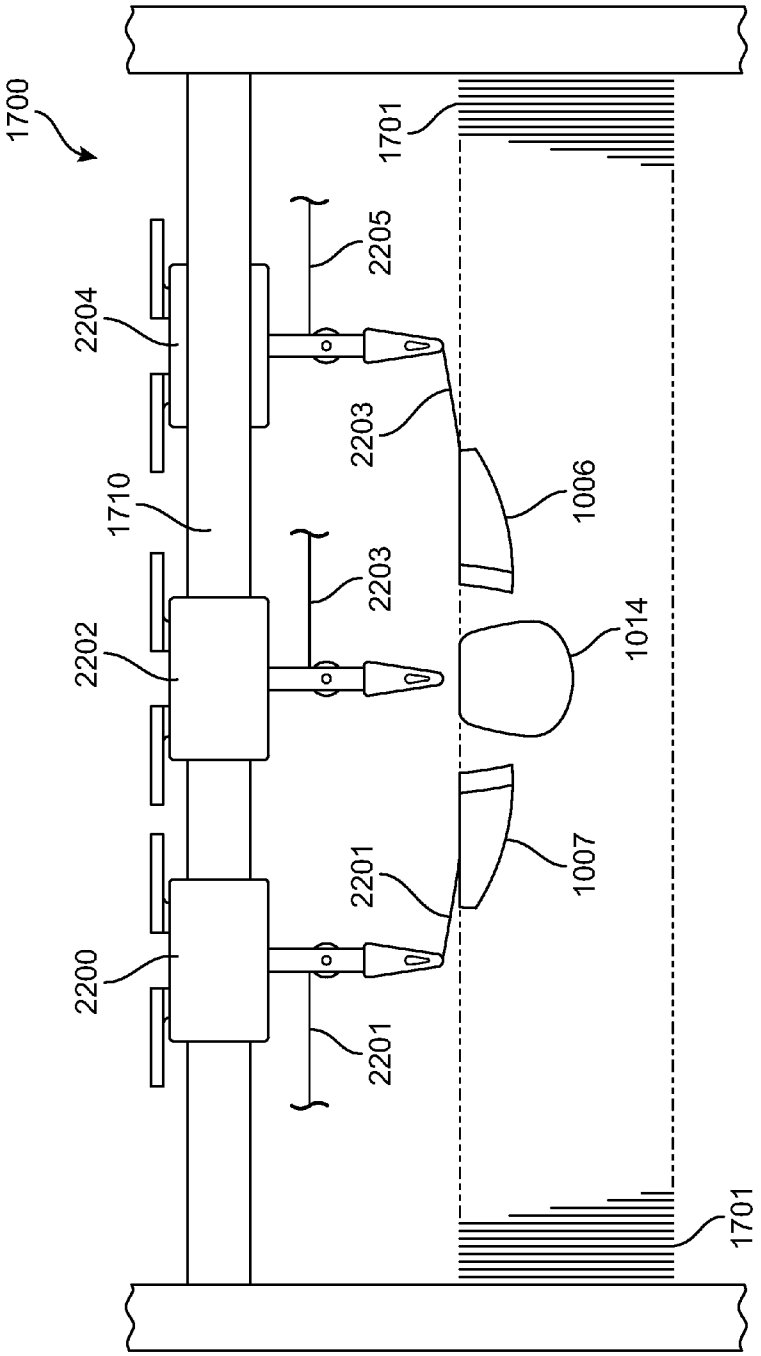
1700
2204
1710
2202
2200
2205
2203
2203
2201
2201
1701
1006
1014
1007
1701

FIG. 23

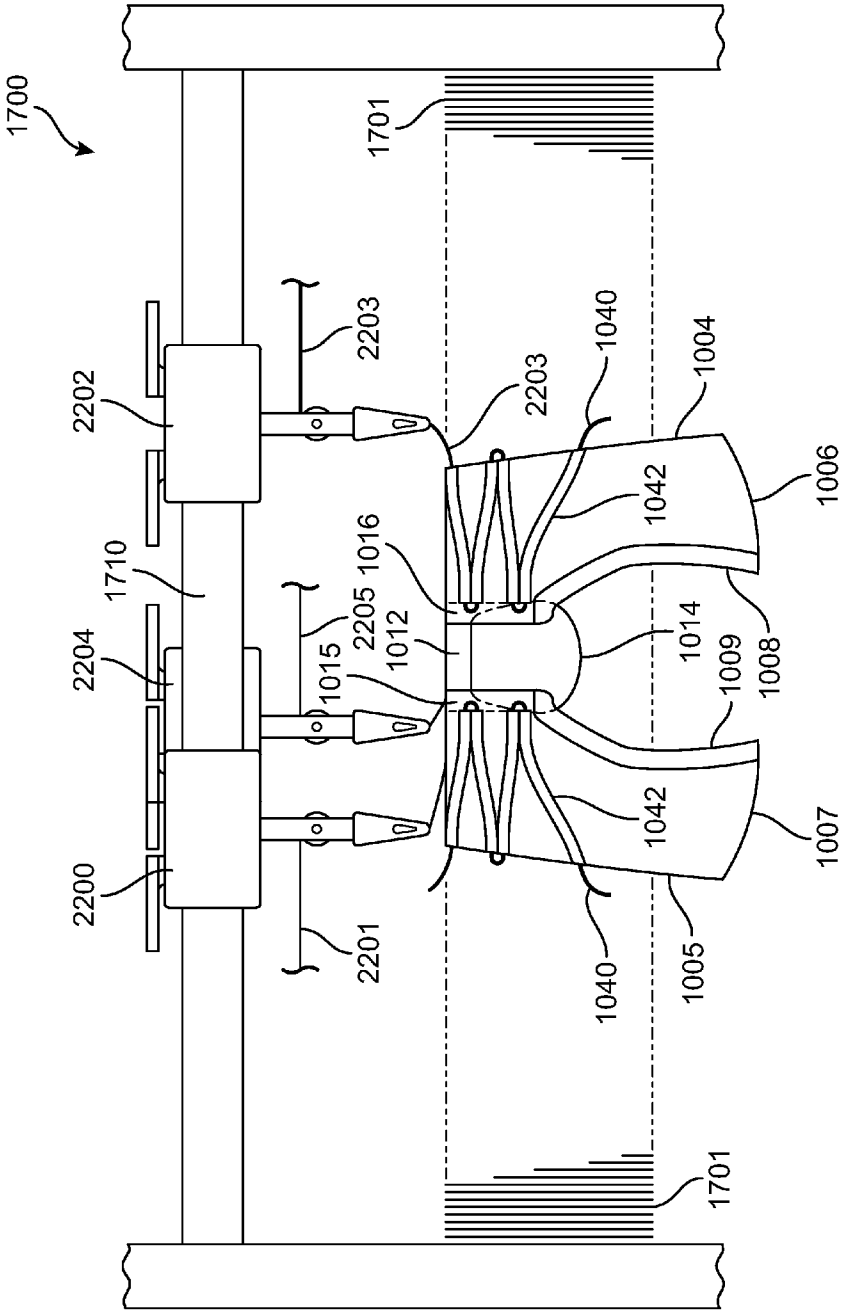
1700
1701
2203
2202
2203
1040
1004
1042
1006
1710
1016
2205
1012
1014
2204
1015
1009
1008
1042
1007
2200
2201
1040
1005
1701

FIG. 24

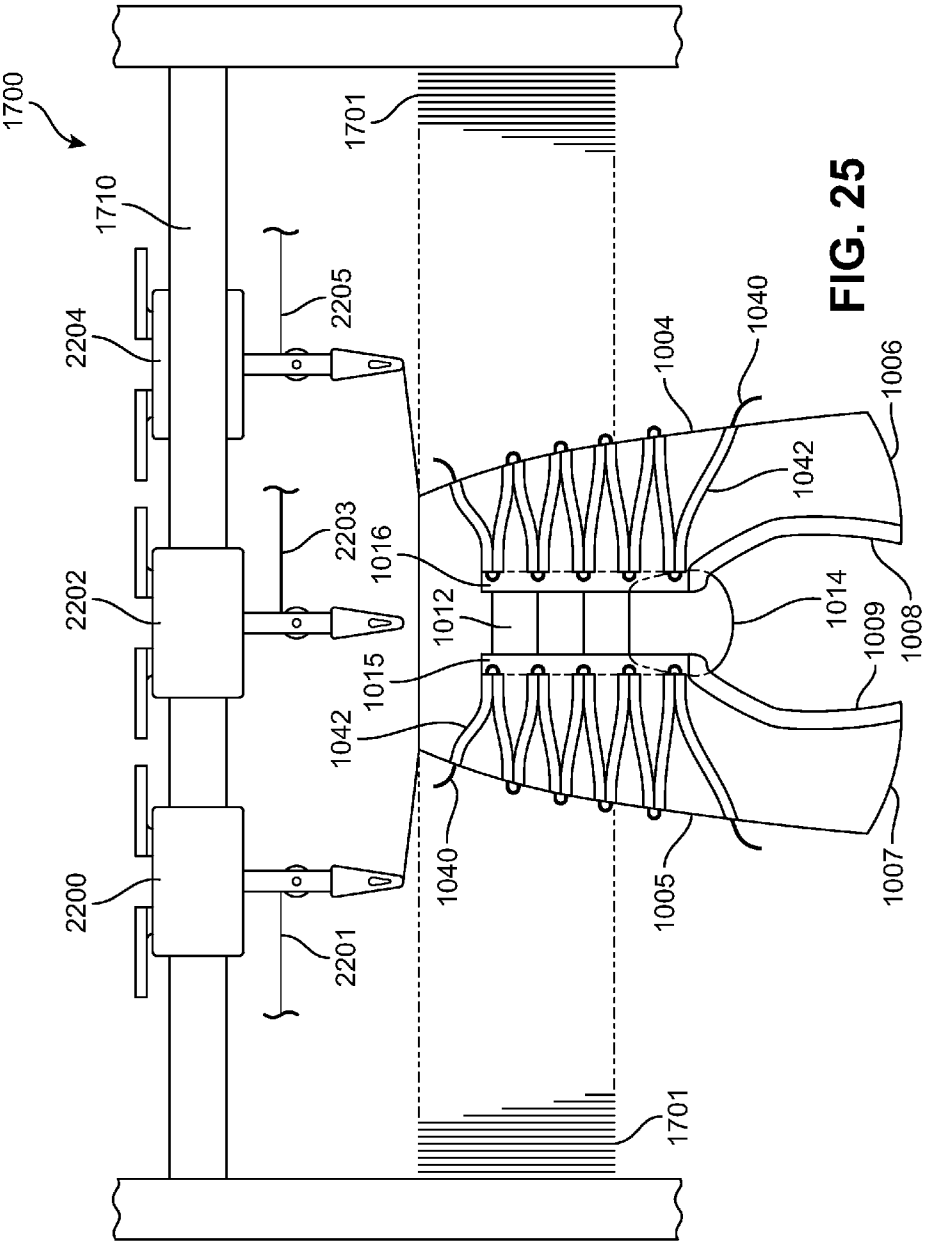
1700
1710
2204
2202
2200
2205
2203
2201
1701
1016
1012
1015
1042
1040
1004
1040
1042
1006
1014
1009
1008
1005
1007
1701

FIG. 25

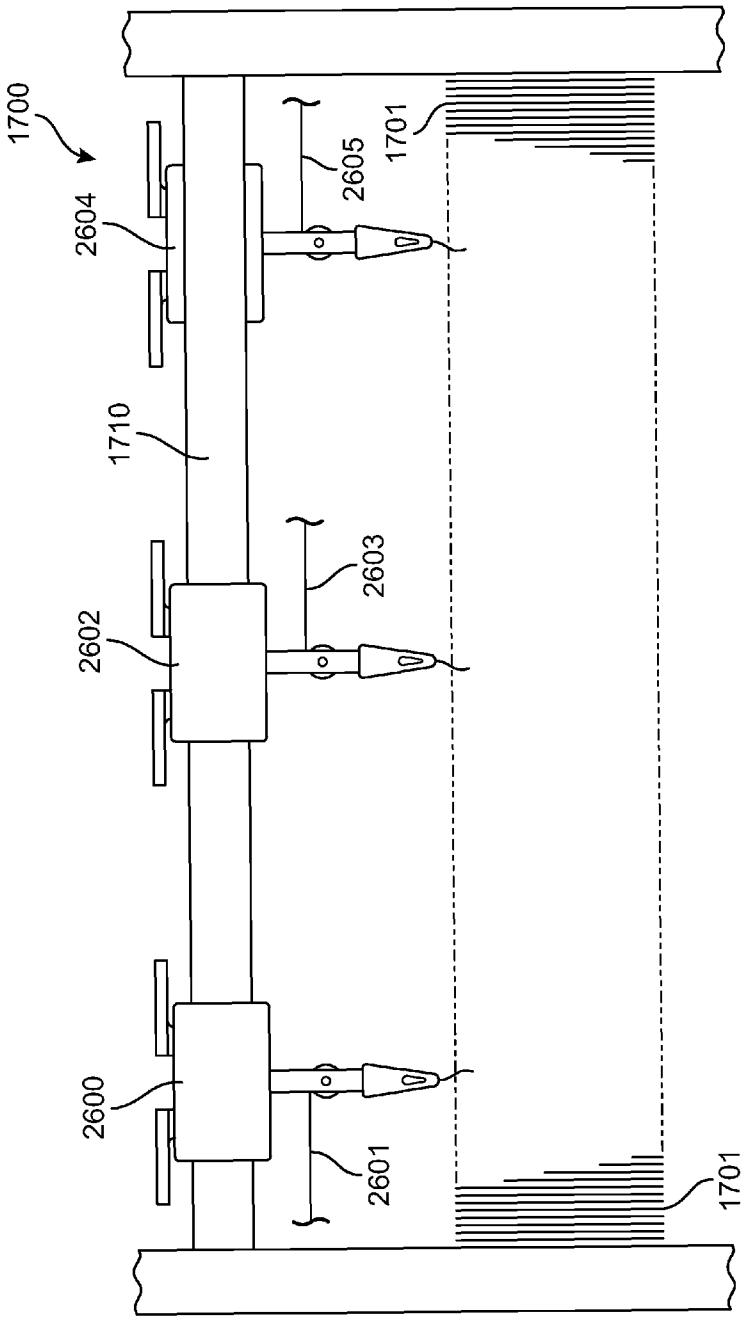

FIG. 26

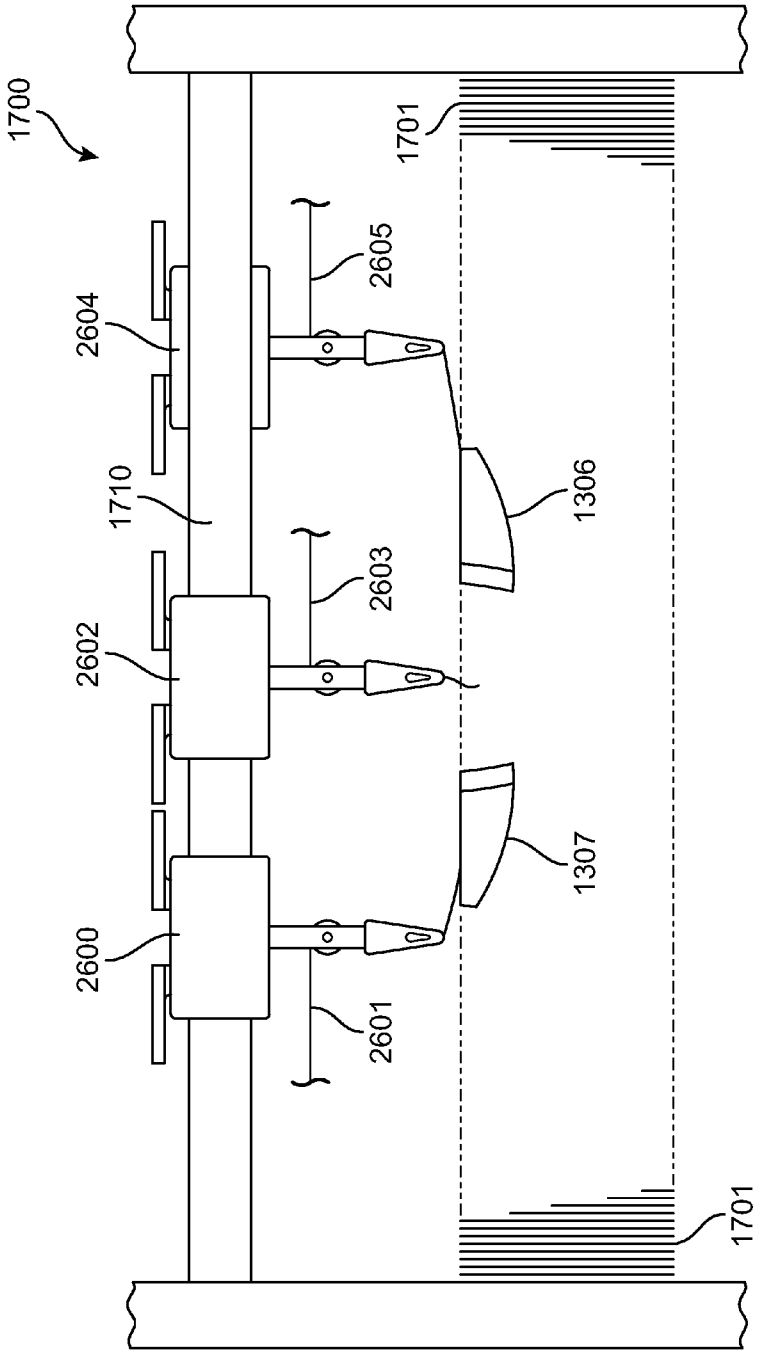

FIG. 27

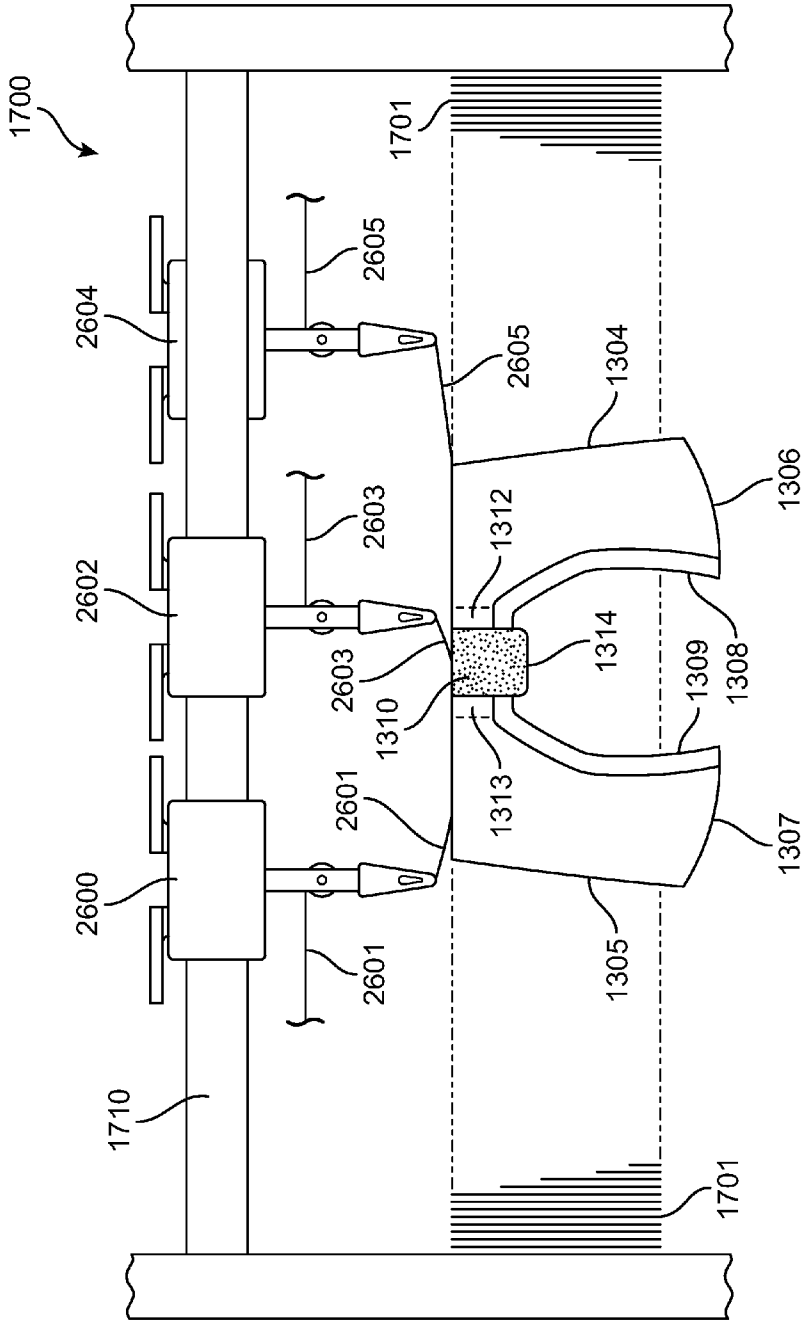
1700
1701
2605
2604
2605
1304
1306
2603
1312
2602
1314
2603
1309
1308
1310
1313
2601
1307
2600
1305
2601
1710
1701

FIG. 28

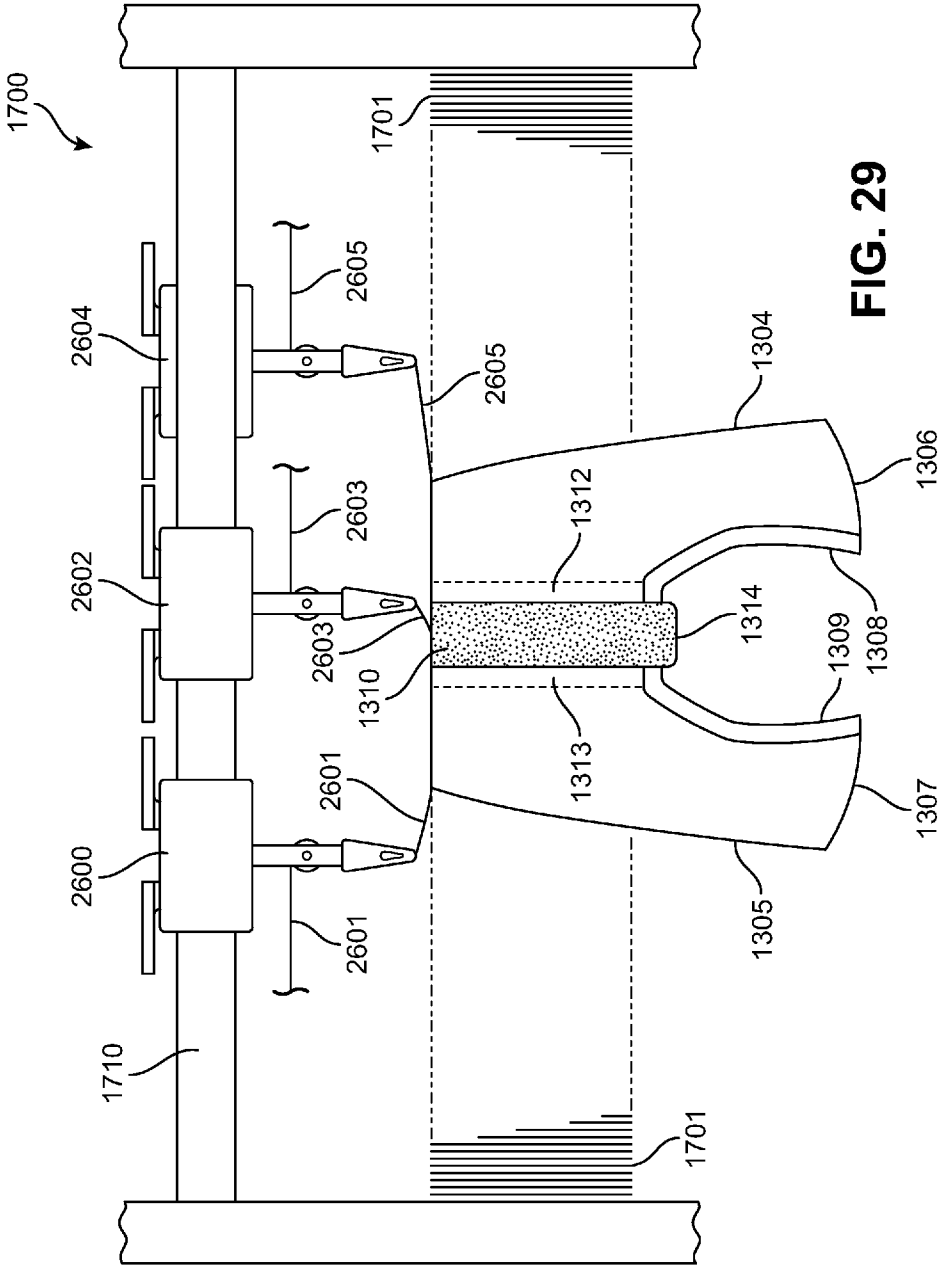
1700
1701
2604
2605
2605
2602
2603
2603
1310
2600
2601
2601
1710
1701
1304
1306
1312
1314
1309
1308
1313
1307
1305

FIG. 29

METHOD OF KNITTING A KNITTED COMPONENT WITH AN INTEGRAL KNIT TONGUE

CROSS-REFERENCE TO RELATED APPLICATION

This application is a continuation-in-part of co-pending U.S. patent application Ser. No. 13/400,511, entitled "Article Of Footwear Incorporating A Knitted Component With A Tongue", filed on Feb. 20, 2012, which application is hereby incorporated by reference in its entirety.

BACKGROUND

The present invention relates generally to methods of manufacturing articles of footwear, and, in particular, to a knitting process for a knitted component with an integral knit tongue for an article of footwear.

Conventional articles of footwear generally include two primary elements, an upper and a sole structure. The upper is secured to the sole structure and forms a void on the interior of the footwear for comfortably and securely receiving a foot. The sole structure is secured to a lower area of the upper, thereby being positioned between the upper and the ground. In athletic footwear, for example, the sole structure may include a midsole and an outsole. The midsole often includes a polymer foam material that attenuates ground reaction forces to lessen stresses upon the foot and leg during walking, running, and other ambulatory activities. Additionally, the midsole may include fluid-filled chambers, plates, moderators, or other elements that further attenuate forces, enhance stability, or influence the motions of the foot. The outsole is secured to a lower surface of the midsole and provides a ground-engaging portion of the sole structure formed from a durable and wear-resistant material, such as rubber. The sole structure may also include a sockliner positioned within the void and proximal a lower surface of the foot to enhance footwear comfort.

The upper generally extends over the instep and toe areas of the foot, along the medial and lateral sides of the foot, under the foot, and around the heel area of the foot. In some articles of footwear, such as basketball footwear and boots, the upper may extend upward and around the ankle to provide support or protection for the ankle. Access to the void on the interior of the upper is generally provided by an ankle opening in a heel region of the footwear. A lacing system is often incorporated into the upper to adjust the fit of the upper, thereby permitting entry and removal of the foot from the void within the upper. The lacing system also permits the wearer to modify certain dimensions of the upper, particularly girth, to accommodate feet with varying dimensions. In addition, the upper may include a tongue that extends under the lacing system to enhance adjustability of the footwear, and the upper may incorporate a heel counter to limit movement of the heel.

A variety of material elements (e.g., textiles, polymer foam, polymer sheets, leather, synthetic leather) are conventionally used in manufacturing the upper. In athletic footwear, for example, the upper may have multiple layers that each include a variety of joined material elements. As examples, the material elements may be selected to impart stretch-resistance, wear-resistance, flexibility, air-permeability, compressibility, comfort, and moisture-wicking to different areas of the upper. In order to impart the different properties to different areas of the upper, material elements are often cut to desired shapes and then joined together, usually with stitching or adhesive bonding. Moreover, the material elements are

often joined in a layered configuration to impart multiple properties to the same areas. As the number and type of material elements incorporated into the upper increases, the time and expense associated with transporting, stocking, cutting, and joining the material elements may also increase. Waste material from cutting and stitching processes also accumulates to a greater degree as the number and type of material elements incorporated into the upper increases. Moreover, uppers with a greater number of material elements may be more difficult to recycle than uppers formed from fewer types and numbers of material elements. By decreasing the number of material elements used in the upper, therefore, waste may be decreased while increasing the manufacturing efficiency and recyclability of the upper.

Therefore, there exists a need for an article of footwear that incorporates a knitted component with an integral knit tongue.

SUMMARY

Various configurations of an article of footwear may have an upper and a sole structure secured to the upper. A knitted component including the upper and an integral knit tongue is incorporated into the article of footwear. The upper and the integral knit tongue are formed as a one-piece knit element. The knit element defines a portion of an exterior surface of the upper and an opposite interior surface of the upper, with the interior surface defining a void for receiving a foot. The integral knit tongue is formed of unitary knit construction with the upper as a one-piece knit element and extends through a throat area of the upper. The integral knit tongue incorporates raised elements providing lace apertures for a lacing system.

In one aspect, the invention provides a method of manufacturing a knitted component for an article of footwear, the method comprising: knitting a portion of the knitted component defining an upper with a knitting machine, the upper including a portion of at least one of an exterior surface of the knitted component and an opposite interior surface of the knitted component; and knitting an integral knit tongue that is of unitary knit construction with the upper with the knitting machine, the integral knit tongue extending through a throat area of the knitted component; and wherein the integral knit tongue is joined by knitting with the knitting machine to a forward portion of the throat area and at least along a portion of a lateral side and a medial side of the throat area of the knitted component extending from the forward portion to an ankle opening of the upper.

In another aspect, the invention provides a method of manufacturing a knitted component for an article of footwear, the method comprising: knitting a first portion of the knitted component defining an upper with a first feeder of a knitting machine, the upper including a portion of at least one of an exterior surface of the knitted component and an opposite interior surface of the knitted component; knitting a second portion of the knitted component defining the upper with a second feeder of the knitting machine; and knitting an integral knit tongue that is of unitary knit construction with the upper with at least one of the first feeder and the second feeder of the knitting machine, the integral knit tongue extending through a throat area of the knitted component; and wherein the integral knit tongue is joined by knitting with the knitting machine to a forward portion of the throat area and at least along a portion of a lateral side and a medial side of the throat area of the knitted component extending from the forward portion to an ankle opening of the upper.

In another aspect, the invention provides a method of manufacturing a knitted component for an article of footwear, the method comprising: knitting a first portion of the knitted component defining an upper with a first feeder of a knitting machine, the upper including a portion of at least one of an exterior surface of the knitted component and an opposite interior surface of the knitted component; knitting a second portion of the knitted component defining the upper with a second feeder of the knitting machine; and knitting an integral knit tongue that is of unitary knit construction with the upper with a third feeder of the knitting machine, the integral knit tongue extending through a throat area of the knitted component; and wherein the integral knit tongue is joined by knitting with the knitting machine to a forward portion of the throat area and at least along a portion of a lateral side and a medial side of the throat area of the knitted component extending from the forward portion to an ankle opening of the upper.

Other systems, methods, features and advantages of the invention will be, or will become, apparent to one of ordinary skill in the art upon examination of the following figures and detailed description. It is intended that all such additional systems, methods, features and advantages be included within this description and this summary, be within the scope of the invention, and be protected by the following claims.

BRIEF DESCRIPTION OF THE DRAWINGS

The invention can be better understood with reference to the following drawings and description. The components in the figures are not necessarily to scale, emphasis instead being placed upon illustrating the principles of the invention. Moreover, in the figures, like reference numerals designate corresponding parts throughout the different views.

FIG. **1** is an isometric view of an exemplary embodiment of an article of footwear;

FIG. **2** is a lateral side view of an exemplary embodiment of an article of footwear;

FIG. **3** is a medial side view of an exemplary embodiment of an article of footwear;

FIG. **4**A is a cross-sectional view of the article of footwear, as defined by section lines **4**A in FIGS. **2** and **3**;

FIG. **4**B is a cross-sectional view of the article of footwear, as defined by section lines **4**B in FIGS. **2** and **3**;

FIG. **5** is a top plan view of an exemplary embodiment of a knitted component with an integral knit tongue;

FIG. **6** is a cross-sectional view of the knitted component with the integral knit tongue, as defined by section line **6** in FIG. **5**;

FIG. **7** is an enlarged schematic view of the integral knit tongue of the knitted component;

FIG. **8** is a top plan view of an alternate embodiment of a knitted component with an integral knit tongue;

FIG. **9** is a cross-sectional view of the knitted component with the integral knit tongue, as defined by section line **9** in FIG. **8**;

FIG. **10** is a top plan view of an alternate embodiment of a knitted component with an integral knit tongue having a partially integral portion;

FIG. **11** is an enlarged schematic view of the integral knit tongue of the knitted component having a partially integral portion;

FIG. **12** is a cross-sectional view of the knitted component with the integral knit tongue having a partially integral portion, as defined by section line **12** in FIG. **11**;

FIG. **13** is a top plan view of an alternate embodiment of a knitted component with an integral knit tongue having partially decoupled knit elements;

FIG. **14** is a cross-sectional view of the integral knit tongue of the knitted component having partially decoupled knit elements, as defined by section line **14** in FIG. **13**;

FIG. **15** is a cross-sectional view of the integral knit tongue of the knitted component having partially decoupled knit elements, as defined by section line **15** in FIG. **13**;

FIG. **16** is a loop diagram of an exemplary embodiment of an integral knit tongue;

FIG. **17** is an isometric view of an exemplary embodiment of a knitting machine;

FIG. **18** is a schematic view of internal components of the knitting machine in operation;

FIG. **19** is a schematic view of internal components of the knitting machine in operation to manufacture a knitted component with an integral knit tongue;

FIG. **20** is a schematic view of internal components of the knitting machine in operation to manufacture a knitted component with an integral knit tongue;

FIG. **21** is a schematic view of internal components of the knitting machine in operation to manufacture a knitted component with an integral knit tongue;

FIG. **22** is a schematic view of internal components of the knitting machine in operation to manufacture a knitted component with an integral knit tongue having a partially integral portion;

FIG. **23** is a schematic view of internal components of the knitting machine in operation to manufacture a knitted component with an integral knit tongue having a partially integral portion;

FIG. **24** is a schematic view of internal components of the knitting machine in operation to manufacture a knitted component with an integral knit tongue having a partially integral portion;

FIG. **25** is a schematic view of internal components of the knitting machine in operation to manufacture a knitted component with an integral knit tongue having a partially integral portion;

FIG. **26** is a schematic view of internal components of the knitting machine in operation to manufacture a knitted component with an integral knit tongue having partially decoupled knit layers;

FIG. **27** is a schematic view of internal components of the knitting machine in operation to manufacture a knitted component with an integral knit tongue having partially decoupled knit layers;

FIG. **28** is a schematic view of internal components of the knitting machine in operation to manufacture a knitted component with an integral knit tongue having partially decoupled knit layers; and

FIG. **29** is a schematic view of internal components of the knitting machine in operation to manufacture a knitted component with an integral knit tongue having partially decoupled knit layers.

DETAILED DESCRIPTION

The following discussion and accompanying figures disclose a variety of concepts relating to knitted components and the manufacture of knitted components. Although the knitted components may be used in a variety of products, an article of footwear that incorporates one of the knitted components is disclosed below as an example. In addition to footwear, the knitted components may be used in other types of apparel (e.g., shirts, pants, socks, jackets, undergarments), athletic equipment (e.g., golf bags, baseball and football gloves, soccer ball restriction structures), containers (e.g., backpacks, bags), and upholstery for furniture (e.g., chairs, couches, car

seats). The knitted components may also be used in bed coverings (e.g., sheets, blankets), table coverings, towels, flags, tents, sails, and parachutes. The knitted components may be used as technical textiles for industrial purposes, including structures for automotive and aerospace applications, filter materials, medical textiles (e.g. bandages, swabs, implants), geotextiles for reinforcing embankments, agrotextiles for crop protection, and industrial apparel that protects or insulates against heat and radiation. Accordingly, the knitted components and other concepts disclosed herein may be incorporated into a variety of products for both personal and industrial purposes.

Footwear Configurations

FIGS. **1** through **15** illustrate various footwear configurations according to the principles described and illustrated herein. In particular, FIGS. **1**-**4**B illustrate an exemplary embodiment of an article of footwear incorporating a knitted component including an upper and an integral knit tongue.

FIGS. **1** through **4**B illustrate an exemplary embodiment of an article of footwear **100**, also referred to simply as footwear **100**. In some embodiments, article of footwear **100** may include a sole structure **110** and an upper **120**. Although footwear **100** is illustrated as having a general configuration suitable for running, concepts associated with footwear **100** may also be applied to a variety of other athletic footwear types, including baseball shoes, basketball shoes, cycling shoes, football shoes, tennis shoes, soccer shoes, training shoes, walking shoes, and hiking boots, for example. The concepts may also be applied to footwear types that are generally considered to be non-athletic, including dress shoes, loafers, sandals, and work boots. Accordingly, the concepts disclosed with respect to footwear **100** may be applied to a wide variety of footwear types.

For reference purposes, footwear **100** may be divided into three general regions: a forefoot region **101**, a midfoot region **102**, and a heel region **103**, as shown in FIGS. **1**, **2**, and **3**. Forefoot region **101** generally includes portions of footwear **100** corresponding with the toes and the joints connecting the metatarsals with the phalanges. Midfoot region **102** generally includes portions of footwear **100** corresponding with an arch area of the foot. Heel region **103** generally corresponds with rear portions of the foot, including the calcaneus bone. Footwear **100** also includes a lateral side **104** and a medial side **105**, which extend through each of forefoot region **101**, midfoot region **102**, and heel region **103** and correspond with opposite sides of footwear **100**. More particularly, lateral side **104** corresponds with an outside area of the foot (i.e., the surface that faces away from the other foot), and medial side **105** corresponds with an inside area of the foot (i.e., the surface that faces toward the other foot). Forefoot region **101**, midfoot region **102**, and heel region **103** and lateral side **104**, medial side **105** are not intended to demarcate precise areas of footwear **100**. Rather, forefoot region **101**, midfoot region **102**, and heel region **103** and lateral side **104**, medial side **105** are intended to represent general areas of footwear **100** to aid in the following discussion. In addition to footwear **100**, forefoot region **101**, midfoot region **102**, and heel region **103** and lateral side **104**, medial side **105** may also be applied to sole structure **110**, upper **120**, and individual elements thereof.

In an exemplary embodiment, sole structure **110** is secured to upper **120** and extends between the foot and the ground when footwear **100** is worn. In some embodiments, the primary elements of sole structure **110** are a midsole **111**, an outsole **112**, and a sockliner **113** (shown in FIGS. **4**A and **4**B). Midsole **111** is secured to a lower surface of upper **120** and may be formed from a compressible polymer foam element (e.g., a polyurethane or ethylvinylacetate foam) that attenuates ground reaction forces (i.e., provides cushioning) when compressed between the foot and the ground during walking, running, or other ambulatory activities. In other embodiments, midsole **111** may incorporate plates, moderators, fluid-filled chambers, lasting elements, or motion control members that further attenuate forces, enhance stability, or influence the motions of the foot, or midsole **111** may be primarily formed from a fluid-filled chamber. Outsole **112** is secured to a lower surface of midsole **111** and may be formed from a wear-resistant rubber material that is textured to impart traction. Sockliner **113** is located within upper **120** and is positioned to extend under a lower surface of the foot to enhance the comfort of footwear **100**. Although this configuration for sole structure **110** provides an example of a sole structure that may be used in connection with upper **120**, a variety of other conventional or nonconventional configurations for sole structure **110** may also be used. Accordingly, in other embodiments, the features of sole structure **110** or any sole structure used with upper **120** may vary.

In some embodiments, upper **120** defines a void within footwear **100** for receiving and securing a foot relative to sole structure **110**. The void is shaped to accommodate the foot and extends along a lateral side of the foot, along a medial side of the foot, over the foot, around the heel, and under the foot. Access to the void is provided by an ankle opening **121** located in at least heel region **103**. In some embodiments, a throat area **123** extends from ankle opening **121** in heel region **103** over an area corresponding to an instep of the foot to an area adjacent to forefoot region **101**. In an exemplary embodiment, an integral knit tongue **140** is formed of unitary knit construction with upper **120** and extends through throat area **123** of upper **120** between lateral side **104** and medial side **105**.

A lace **122** extends through various lace apertures **143** in raised elements **142** of integral knit tongue **140** and permits the wearer to modify dimensions of upper **120** to accommodate proportions of the foot. More particularly, lace **122** permits the wearer to tighten upper **120** around the foot, and lace **122** permits the wearer to loosen upper **120** to facilitate entry and removal of the foot from the void (i.e., through ankle opening **121**). In addition, integral knit tongue **140** of upper **120** extends under lace **122** to enhance the comfort of footwear **100**. In further configurations, upper **120** may include additional elements, such as (a) a heel counter in heel region **103** that enhances stability, (b) a toe guard in forefoot region **101** that is formed of a wear-resistant material, and (c) logos, trademarks, and placards with care instructions and material information.

Many conventional footwear uppers are formed from multiple material elements (e.g., textiles, polymer foam, polymer sheets, leather, synthetic leather) that are joined through stitching or bonding, for example. In contrast, a majority of upper **120** is formed from a knitted component **130**, which extends through each of forefoot region **101**, midfoot region **102**, and heel region **103**, along both lateral side **104** and medial side **105**, over forefoot region **101**, and around heel region **103**. In addition, knitted component **130** forms portions of both an exterior surface and an opposite interior surface of upper **120**. As such, knitted component **130** defines at least a portion of the void within upper **120**. In some configurations, knitted component **130** may also extend under the foot. Referring to FIGS. **4**A and **4**B, however, a strobel sock **125** is secured to knitted component **130** and an upper surface of midsole **111**, thereby forming a portion of upper **120** that extends under sockliner **113**.

In some embodiments, knitted component **130** may include upper **120** and integral knit tongue **140** formed of unitary knit construction. Knitted components that include upper **120** and integral knit tongue **140** may be formed with a relatively smaller number of material elements. As discussed in the Background section above, decreasing the number of material elements used in forming an upper may decrease waste, while also increasing the manufacturing efficiency and recyclability of the upper. The tongue and other portions, such as the collar, of conventional uppers are often formed from multiple separate material elements that are later joined together. As discussed in greater detail below, however, integral knit tongue element may be primarily formed through knitting processes (rather than stitch and turn methods) that decrease waste and increase manufacturing efficiency and recyclability. Additionally, the structure of integral knit tongue element **140** may incorporate smaller numbers of seams or other discontinuities, thereby enhancing the overall comfort of footwear **100**.

Additional advantages of constructing integral knit tongue **140** during the knitting process and of unitary knit construction with upper **120** include providing more efficient manufacture and common properties. More particularly, manufacturing efficiency may be increased by forming more of knitted component **130** during the knitting process and eliminating various steps (e.g., making a separate tongue, securing the tongue) that are often performed manually. Integral knit tongue **140** and upper **120** may also have common properties when formed from the same yarn (or type of yarn) or with similar knit structures. For example, using the same yarn in both of integral knit tongue **140** and upper **120** imparts similar durability, strength, stretch, wear-resistance, biodegradability, thermal, and hydrophobic properties. In addition to physical properties, using the same yarn in both of integral knit tongue **140** and upper **120** may impart common aesthetic or tactile properties, such as color, sheen, and texture. Using the same knit structures in both of integral knit tongue **140** and upper **120** may also impart common physical properties and aesthetic properties. These advantages may also be present when at least a portion of integral knit tongue **140** and at least a portion of upper **120** are formed from a common yarn (or type of yarn) or with common knit structures.

Knitted Component Configurations

FIGS. **5** through **15** illustrate various embodiments of knitted components that may be incorporated into articles of footwear in a similar manner as the exemplary embodiment of FIGS. **1** through **4**B. The knitted components illustrated in FIGS. **5** through **15** are depicted separate from a remainder of footwear **100**. However, it should be understood that each of the embodiments of knitted components described herein may be combined with the elements of footwear **100**, described above, to form an article of footwear incorporating the knitted component.

Referring now to FIG. **5**, an exemplary embodiment of a first knitted component **500** is shown in a top plan view. First knitted component **500** may be substantially similar to knitted component **130**, described above. In some embodiments, first knitted component **500** includes a first portion defining an upper **502** and a second portion defining an integral knit tongue **512**. In an exemplary embodiment, first knitted component **500** incorporates upper **502** and integral knit tongue element **512** formed of unitary knit construction. As used herein and in the claims, a knitted component (e.g., first knitted component **500**, or other knitted components described herein) is defined as being formed of "unitary knit construction" when formed as a one-piece element through a knitting process. That is, the knitting process substantially forms the various features and structures of first knitted component **500** without the need for significant additional manufacturing steps or processes. A unitary knit construction may be used to form a knitted component having structures or elements (including upper **502** and integral knit tongue **512**) that include one or more courses of yarn or other knit material that are joined such that the structures or elements include at least one course in common (i.e., sharing a common yarn) and/or include courses that are substantially continuous between each of the structures or elements. With this arrangement, a one-piece element of unitary knit construction is provided.

Although portions of first knitted component **500** may be joined to each other (e.g., edges of first knitted component **500** being joined together) following the knitting process, first knitted component **500** remains formed of unitary knit construction because it is formed as a one-piece knit element. Moreover, first knitted component **500** remains formed of unitary knit construction when other elements (e.g., a lace, logos, trademarks, placards with care instructions and material information, structural elements) are added following the knitting process.

In an exemplary embodiment, the primary element of first knitted component **500** is a knit element forming upper **502** and integral knit tongue **512**. A knit element may be formed from at least one yarn that is manipulated (e.g., with a knitting machine) to form a plurality of intermeshed loops that define a variety of courses and wales. That is, the knit element forming first knitted component **500** has the structure of a knit textile. Other embodiments of knitted components, including the embodiments described below, may include a knit element and at least one tensile element.

First knitted component **500** has a generally U-shaped configuration that is outlined by an outer perimeter and an inner perimeter. In this embodiment, the outer perimeter includes a front perimeter edge **503**, a lateral perimeter edge **504**, a medial perimeter edge **505**, and a pair of heel edges, including a lateral heel edge **506** and a medial heel edge **507**. The inner perimeter of first knitted component **500** includes a lateral inner edge **508**, a medial inner edge **509**, and a front inner edge **510**. When incorporated into an article of footwear, including footwear **100**, front perimeter edge **503**, lateral perimeter edge **504**, medial perimeter edge **505**, and at least a portion of lateral heel edge **506** and medial heel edge **507** lays against an upper surface of a midsole and is joined to a strobel sock (e.g., midsole **111** and strobel sock **125**, described above). In addition, lateral heel edge **506** and medial heel edge **507** are joined to each other and extend vertically in a heel region. In some configurations of footwear, a material element may cover a seam between lateral heel edge **506** and medial heel edge **507** to reinforce the seam and enhance the aesthetic appeal of the footwear. Taken together, lateral inner edge **508**, medial inner edge **509**, and front inner edge **510** form an ankle opening, including ankle opening **121** described above, and extends forward to a throat area **520** where integral knit tongue **512** is located. Additionally, in some embodiments, throat area **520** may further include a lace and lace apertures for receiving the lace.

In addition, first knitted component **500** may have a first surface **530** and an opposite second surface **532**. First surface **530** forms a portion of the exterior surface of upper **502**, whereas second surface **532** forms a portion of the interior surface of upper **502**, thereby defining at least a portion of the void within upper **502**.

In various embodiments, a knitted component may incorporate various types of yarn that impart different properties to separate areas of the upper. For example, one area of first

knitted component **500** may be formed from a first type of yarn that imparts a first set of properties, and another area of first knitted component **500** may be formed from a second type of yarn that imparts a second set of properties. In this configuration, properties may vary throughout upper **502** by selecting specific yarns for different areas of first knitted component **500**.

The properties that a particular type of yarn will impart to an area of a knitted component partially depend upon the materials that form the various filaments and fibers within the yarn. Cotton, for example, provides a soft hand, natural aesthetics, and biodegradability. Elastane and stretch polyester each provide substantial stretch and recovery, with stretch polyester also providing recyclability. Rayon provides high luster and moisture absorption. Wool also provides high moisture absorption, in addition to insulating properties and biodegradability. Nylon is a durable and abrasion-resistant material with relatively high strength. Polyester is a hydrophobic material that also provides relatively high durability.

In addition to materials, other aspects of the yarns selected for a knitted component may affect the properties of the upper. For example, a yarn forming first knitted component **500** may be a monofilament yarn or a multifilament yarn. The yarn may also include separate filaments that are each formed of different materials. In addition, the yarn may include filaments that are each formed of two or more different materials, such as a bi-component yarn with filaments having a sheath-core configuration or two halves formed of different materials. Different degrees of twist and crimping, as well as different deniers, may also affect the properties of upper **502**. Accordingly, both the materials forming the yarn and other aspects of the yarn may be selected to impart a variety of properties to separate areas of upper **502**.

In some embodiments, integral knit tongue **512** may be centrally-located in throat area **520** of first knitted component **500** and may extend from an ankle opening in a heel region over an area corresponding to an instep of the foot to an area adjacent to a forefoot region, as well as extending between a lateral side and a medial side of first knitted component. In an exemplary embodiment, integral knit tongue **512** is formed of unitary knit construction with upper **502** at a forward portion of throat area **520** of first knitted component **500**. That is, integral knit tongue **512** is joined through knitting to upper **502** at the forward portion of throat area **520** such that integral knit tongue **512** and upper **502** include at least one course in common and/or include courses that are substantially continuous between integral knit tongue **512** and upper **502** at the forward portion of throat area **520**.

In an exemplary embodiment, integral knit tongue **512** may be further formed of unitary knit construction with upper **502** along the sides of integral knit tongue **512** extending along a length of throat area **520** of first knitted component **500**. Accordingly, integral knit tongue **512** is joined through knitting to upper **502** along each of a lateral side and a medial side of throat area **520** such that integral knit tongue **512** and upper **502** include at least one course in common and/or include courses that are substantially continuous between integral knit tongue **512** and upper **502** along the sides extending through throat area **520**.

In some embodiments, integral knit tongue **512** may include raised elements disposed on opposite sides of throat area **520** and extending along the length of integral knit tongue **512**. Raised elements may be a portion of integral knit tongue **512** that are formed through the knitting process to be a flap or overhanging portion of integral knit tongue **512** that extends outward away from first surface **530** of upper **502**. As shown in FIG. **5**, integral knit tongue **512** includes a lateral raised element **514** and a medial raised element **515**. In an exemplary embodiment, lateral raised element **514** and medial raised element **515** are formed of unitary knit construction with integral knit tongue **512** and upper **502** according to the method below. With this arrangement, lateral raised element **514** and medial raised element **515** include one or more common courses and/or courses that are substantially continuous with integral knit tongue **512** and upper **502**.

In some embodiments, raised elements associated with an integral knit tongue, including lateral raised element **514** and medial raised element **515** associated with integral knit tongue **512**, may include one or more lace apertures disposed at various locations along the raised element for receiving a lace. In some cases, the lace apertures may be a void or opening within the knitted structure forming the raised element that is sufficient to allow a lace to pass through. In other cases, the lace apertures may be a hole or opening that is cut or removed from the material forming the raised elements. In still other cases, the lace apertures may include additional elements, including, but not limited to loops, grommets, eyelets, eye hooks, or other suitable lace receiving members.

Referring now to FIG. **6**, a cross-sectional view of integral knit tongue **512** is illustrated. In an exemplary embodiment, raised elements are formed of unitary knit construction with integral knit tongue **512** and upper **502** such that first knitted component **500** is a one-piece element. In this embodiment, lateral raised element **514** is joined with upper **502** at a first proximal end **600** and medial raised element **515** is joined with upper **502** at a second proximal end **601**. Each raised element extends outward from first surface **530** of upper **502** in a flap-like arrangement to form an overhanging portion of integral knit tongue **512**. In this embodiment, lateral raised element **514** extends outward from first proximal end **600** to a first distal end **602** and includes a first outward facing side **604** and a first inward facing side **606**. Similarly, medial raised element **515** extends outward from second proximal end **601** to a second distal end **603** and includes a second outward facing side **605** and a second inward facing side **607**. In an exemplary embodiment, first outward facing side **604** and/or second outward facing side **605** may be oriented towards each side of first knitted component **500**, while first inward facing side **606** and/or second inward facing side **607** may be oriented towards the center of first knitted component **500** where integral knit tongue **512** is located.

In addition, as shown in FIG. **6**, lateral raised element **514** and medial raised element **515** are shown in a flat configuration such that first inward facing side **606** and/or second inward facing side **607** is oriented towards first surface **530**. In various embodiments, however, raised elements, including lateral raised element **514** and medial raised element **515**, may be positioned in an upright configuration. Referring now to FIG. **7**, lateral raised element **514** and medial raised element **515** are shown in an upright configuration such that first inward facing side **606** and/or second inward facing side **607** is oriented generally perpendicular to or at a raised angle with regard to first surface **530**. In some embodiments, the process of pulling upper **502** tight on opposite sides of integral knit tongue **512** (for example, by joining first knitted component **500** with a sole structure to form an article of footwear) may cause each of lateral raised element **514** and medial raised element **515** to move from the flat configuration to the upright configuration.

In an exemplary embodiment, lateral raised element **514** and medial raised element **515** of integral knit tongue **512** may extend a first height H**1** above first surface **530** of first knitted component **500**. In some embodiments, upright configuration of lateral raised element **514** and medial raised

element **515** may be used to incorporate lace apertures into integral knit tongue **512**. In this embodiment, a plurality of lace apertures **700** are shown disposed along the respective sides of lateral raised element **514** and medial raised element **515** and extending through from first outward facing side **604** to first inward facing side **606** and from second outward facing side **605** to second inward facing side **607**. In some cases, plurality of lace apertures **700** may be a void or opening within the knitted structure of integral knit tongue **512** forming the raised elements. In other cases, plurality of lace apertures **700** may have a different structure, including any of the suitable structures for lace apertures described above.

Referring to FIGS. **8** and **9**, an exemplary embodiment of a second knitted component **800** is shown in a top plan view. Second knitted component **800** may be substantially similar to knitted component **130** and/or first knitted component **500**, described above. In some embodiments, second knitted component **800** includes a first portion defining an upper **802** and a second portion defining an integral knit tongue **812**. In an exemplary embodiment, second knitted component **800** incorporates upper **802** and integral knit tongue **812** formed of unitary knit construction.

As with first knitted component **500**, second knitted component **800** has a generally U-shaped configuration that is outlined by an outer perimeter and an inner perimeter. In this embodiment, the outer perimeter includes a front perimeter edge **803**, a lateral perimeter edge **804**, a medial perimeter edge **805**, and a pair of heel edges, including a lateral heel edge **806** and a medial heel edge **807**. The inner perimeter of second knitted component **800** includes a lateral inner edge **808** and a medial inner edge **809** which may form an ankle opening. In addition, second knitted component **800** may have a first surface **830** forming a portion of the exterior surface of upper **802** and an opposite second surface **832** forming a portion of the interior surface of upper **802**.

In an exemplary embodiment, second knitted component **800** may include integral knit tongue **812** that includes a top end **814** that extends into the portion of second knitted component **800** that is associated with an ankle opening. Top end **814** may be generally free from other portions of second knitted component **800**. Integral knit tongue **812** may be formed of unitary knit construction with upper **802** at a forward portion of a throat area **820** of second knitted component **800** and along the sides of integral knit tongue **812** extending along a length of throat area **820**. In an exemplary embodiment, integral tongue **812** of second knitted component **800** does not include raised elements. Accordingly, in contrast with first knitted component **500**, second knitted component **800** includes a portion of upper **802** that extends over integral knit tongue **812** to form a lateral inner edge **816** and a medial inner edge **817**. More particularly, edges of integral knit tongue **812** are knit to an area of second knitted component **800** that is spaced outward from lateral inner edge **816** and medial inner edge **817**.

Referring now to FIG. **9**, a cross-sectional view of integral knit tongue **812** is illustrated. In an exemplary embodiment, edges of integral knit tongue **812** are formed of unitary knit construction with upper **802** such that second knitted component **800** is a one-piece element. In this embodiment, first edge **900** and second edge **902** of integral knit tongue **812** are joined with second surface **832** of upper **802** such that integral knit tongue **812** extends below lateral inner edge **816** and medial inner edge **817** of upper **802**. With this arrangement, a top surface of integral knit tongue **812** may be oriented facing towards second surface **832** of second knitted component **800** disposed on the portion of upper **802** extending out to lateral inner edge **816** and medial inner edge **817**. In an exemplary embodiment, the configuration of integral knit tongue **812** included in second knitted component **800** may be provided to lay in a substantially flat condition.

In various embodiments, provisions may be made within a knitted component to assist a wearer with inserting and/or removing a foot from an ankle opening of an article of footwear. In some embodiments, an integral knit tongue of a knitted component may be modified to allow for a larger ankle opening. FIGS. **10** through **15** illustrate alternate embodiments of knitted components that have been provided with mechanisms to allow a larger ankle opening when incorporated into an article of footwear.

FIGS. **10** through **12** illustrate an alternate embodiment of a knitted component that includes a mechanism to allow a larger ankle opening when incorporated into an article of footwear. Referring now to FIG. **10**, a top plan view of an alternate embodiment of a knitted component with an integral knit tongue having a partially integral portion is illustrated. In some embodiments, a third knitted component **1000** may include a first portion defining an upper **1002** and a second portion defining an integral knit tongue **1010**. Third knitted component **1000** may be substantially similar to knitted component **130**, first knitted component **500**, and/or second knitted component **800**, described above. As with first knitted component **500** and/or second knitted component **800**, third knitted component **1000** may have a generally U-shaped configuration that is outlined by an outer perimeter and an inner perimeter. In this embodiment, the outer perimeter includes a front perimeter edge **1003**, a lateral perimeter edge **1004**, a medial perimeter edge **1005**, and a pair of heel edges, including a lateral heel edge **1006** and a medial heel edge **1007**. The inner perimeter of third knitted component **1000** includes a lateral inner edge **1008** and a medial inner edge **1009** which may form an ankle opening. In addition, third knitted component **1000** may have a first surface **1030** forming a portion of the exterior surface of upper **1002** and an opposite second surface **1032** forming a portion of the interior surface of upper **1002**.

In some embodiments, third knitted component **1000** may further include additional structures. In an exemplary embodiment, third knitted component **1000** may include at least one tensile element **1040** that is inlaid within the knit structure of third knitted component **1000**. Suitable materials for tensile element **1040** may include, but is not limited to, yarn or an inlaid strand in the configuration of a filament (e.g., a monofilament), thread, rope, webbing, cable, or chain. Tensile element **1040** extends through third knitted component **1000** and passes between the various loops within a knit structure **1042** formed within third knitted component **1000**. Although tensile element **1040** generally extends along courses within knit structure **1042**, tensile element **1040** may also extend along wales within knit structure **1042**. Advantages of tensile element **1040** include providing support, stability, and structure. For example, tensile element **1040** assists with securing upper **1002** around the foot, limits deformation in areas of upper **1002** (e.g., imparts stretch-resistance) and operates in connection with a lace to enhance the fit of the article of footwear incorporating third knitted component.

A tensile element in the form of an inlaid strand or other suitable element, as well as the method of manufacturing a knitted component incorporating an inlaid strand and knit structures, for use in the embodiments described herein is disclosed in one or more of commonly-owned U.S. patent application Ser. No. 12/338,726 to Dua et al., entitled "Article of Footwear Having An Upper Incorporating A Knitted Component", filed on Dec. 18, 2008 and published as U.S. Patent

Application Publication Number 2010/0154256 on Jun. 24, 2010, and U.S. patent application Ser. No. 13/048,514 to Huffa et al., entitled "Article Of Footwear Incorporating A Knitted Component", filed on Mar. 15, 2011 and published as U.S. Patent Application Publication Number 2012/0233882 on Sep. 20, 2012, both of which applications are hereby incorporated by reference in their entirety (collectively referred to herein as the "Inlaid Strand cases").

In an exemplary embodiment, third knitted component **1000** incorporates upper **1002** and integral knit tongue **1010** formed of unitary knit construction such that at least a portion of upper **1002** and a portion of integral knit tongue **1010** are a one-piece element. In one embodiment, integral knit tongue **1010** may further include a first portion that is formed of unitary knit construction with upper **1002** along the sides of integral knit tongue **1010** and a second portion that is formed of unitary knit construction with the first portion, but is otherwise free from upper **1002**. In this embodiment, third knitted component **1000** includes integral knit tongue **1010** having a partially integral portion **1012** and a free portion **1014**.

In an exemplary embodiment, partially integral portion **1012** may be centrally-located in a throat area **1020** of third knitted component **1000** and may extend from a distance D**1** adjacent to an ankle opening in a heel region over an area corresponding to an instep of the foot to an area adjacent to a forefoot region, as well as extending between a lateral side and a medial side of third knitted component **1000**. In one embodiment, partially integral portion **1012** is formed of unitary knit construction with upper **1002** at a forward portion of throat area **1020** as well as along the sides extending along a length of throat area **1020** of third knitted component **1000**. Accordingly, partially integral portion **1012** is joined through knitting to upper **1002** along the forward portion and each of a lateral side and a medial side of throat area **1020** such that partially integral portion **1012** and upper **1002** include at least one course in common and/or include courses that are substantially continuous.

In an exemplary embodiment, integral knit tongue **1010** may include raised elements disposed on opposite sides of throat area **1020** and extending along the length of integral knit tongue **1010**. Raised elements may be a portion of integral knit tongue **1010** that are formed through the knitting process to be a flap or overhanging portion of integral knit tongue **1010** that extends outward away from first surface **1030** of upper **1002**. As shown in FIGS. **10** and **11**, integral knit tongue **1010** includes a lateral raised element **1016** and a medial raised element **1015** that are formed of unitary knit construction with upper **1002** and partially integral portion **1012** of integral knit tongue **1010**. Lateral raised element **1016** and/or medial raised element **1015** may be substantially similar to, and similarly formed as lateral raised element **514** and medial raised element **515**, described above.

Referring now to FIG. **11**, in an exemplary embodiment, free portion **1014** may be disposed at a top end of throat area **1020** of third knitted component **1000** adjacent to the ankle opening. In one embodiment, free portion **1014** is formed of a unitary knit construction with partially integral portion **1012** at a rearward portion **1100** of throat area **1020**, but is otherwise not joined or attached to other portions of upper **1002** and/or third knitted component **1000**. With this arrangement, an ankle opening may be provided with a larger opening corresponding to the location of rearward portion **1100** of partially integral portion **1012** of integral knit tongue **1010** that extends distance D**1** from the ankle opening along throat area **1020** of third knitted component **1000**. Free portion **1014** of integral knit tongue **1010** may serve to cover a foot of a wearer disposed within the ankle opening to enhance the comfort of the article of footwear incorporating third knitted component **1000**.

In some embodiments, partially integral portion **1012** of integral knit tongue **1010** may include multiple knit structures, including knit structures of different types. For example, partially integral portion **1012** may include a first knit structure **1102** and a second knit structure **1104**. First knit structure **1102** may be associated with a first knit type and may be centrally located and extending along integral knit tongue **1010** from rearward portion **1100** to the forward portion of throat area **1020**. Second knit structure **1104** may be associated with a second knit type and may be located along peripheral sides of integral knit tongue **1010** between first knit structure **1102** and each of lateral raised element **1016** and medial raised element **1015** extending similarly from rearward portion **1100** to the forward portion of throat area **1020**. In one embodiment, first knit structure **1102** and second knit structure **1104** may be different knit structures or different types of knit structures. For example, in some cases, first knit structure **1102** may be a mesh or similar knit type and second knit structure **1104** may be a jersey or similar knit type. In other cases, first knit structure **1102** may be a double-knit jersey structure and second knit structure **1104** may be a single-knit jersey structure. As shown in FIG. **12**, first knit structure **1102** may have a greater thickness than second knit structure **1104** disposed on either peripheral side of first knit structure **1102** extending along the length of partially integral portion **1012** of integral knit tongue **1010**.

In some embodiments, lace apertures for receiving a lace may be provided by tensile element **1040**. In an exemplary embodiment, a plurality of lace loops **1110** may be disposed at portions of tensile element **1040** that extend out from knit structure **1042** adjacent to lateral raised element **1016** and medial raised element **1015** on opposite sides of throat area **1020** of third knitted component **1000**. With this configuration, a lace (not shown) may be disposed through plurality of lace loops **1110** to assist with securing an article of footwear incorporating third knitted component **1000** onto a foot of a wearer. In other embodiments, lace apertures may have a different structure, including any of the suitable structures for lace apertures described above.

FIGS. **13** through **15** illustrate another alternate embodiment of a knitted component with a mechanism to allow a larger ankle opening when incorporated into an article of footwear. Referring now to FIG. **13**, a top plan view of an alternate embodiment of a knitted component with an integral knit tongue having partially decoupled knit elements is illustrated. In some embodiments, a fourth knitted component **1300** may include a first portion defining an upper **1302** and a second portion defining an integral knit tongue **1310**. Fourth knitted component **1300** may share one or more substantially similar features with knitted component **130**, first knitted component **500**, second knitted component **800**, and/or third knitted component **1000**, described above. As with the previous embodiments of knitted components, fourth knitted component **1300** may similarly have a generally U-shaped configuration that is outlined by an outer perimeter and an inner perimeter. In this embodiment, the outer perimeter includes a front perimeter edge **1303**, a lateral perimeter edge **1304**, a medial perimeter edge **1305**, and a pair of heel edges, including a lateral heel edge **1306** and a medial heel edge **1307**. The inner perimeter of fourth knitted component **1300** includes a lateral inner edge **1308** and a medial inner edge **1309** which may form an ankle opening. In addition, fourth knitted component **1300** may have a first surface **1330** forming a portion

of the exterior surface of upper **1302** and an opposite second surface **1332** forming a portion of the interior surface of upper **1302**.

In some embodiments, fourth knitted component **1300** may further include additional structures, including at least one tensile element **1340** that is inlaid within a knit structure **1342** of fourth knitted component **1300**. Tensile element **1340** may be substantially similar to tensile element **1040**, described above, including suitable materials and methods of manufacturing a knitted component incorporating tensile elements and knit structures disclosed in the Inlaid Strand cases. In an exemplary embodiment, tensile element **1340** may further include a plurality of lace loops **1344** that may be configured to receive a lace. Plurality of lace loops **1344** may be disposed at portions of tensile element **1340** that extend out from knit structure **1342** and may have a substantially similar structure as lace loops **1110**, described above. In some cases, lace loops **1344** may serve as lace apertures for receiving a lace. In other cases, lace loops **1344** may coordinate with one or more lace apertures disposed within raised elements of integral knit tongue **1310** to receive a lace. In still other cases, lace loops **1344** may be disposed through lace apertures disposed within raised elements and may receive a lace that extends through a throat area **1320** of upper **1302**.

In an exemplary embodiment, fourth knitted component **1300** incorporates upper **1302** and integral knit tongue **1310** formed of unitary knit construction such that at least a portion of upper **1302** and a portion of integral knit tongue **1310** are a one-piece element. In one embodiment, portions of upper **1302** may be formed from multiple knit element layers. Accordingly, integral knit tongue **1310** may be formed of unitary knit construction with at least one of the knit element layers.

In some embodiments, integral knit tongue **1310** may be centrally-located in throat area **1320** of fourth knitted component **1300** and may extend from a top end **1314** adjacent to an ankle opening in a heel region over an area corresponding to an instep of the foot to an area adjacent to a forefoot region, as well as extending between a lateral side and a medial side of upper **1302**. In an exemplary embodiment, integral knit tongue **1310** is formed of unitary knit construction with at least one knit element layer associated with upper **1302** at a forward portion of throat area **1320** and along the sides extending along a length of throat area **1320** of fourth knitted component **1300**.

In an exemplary embodiment, fourth knitted component **1300** may further include raised elements disposed on opposite sides of throat area **1320** and extending along the length of integral knit tongue **1310**. As shown in FIGS. **13** through **15**, fourth knitted component **1300** includes a lateral raised element **1312** and a medial raised element **1313** that are formed of unitary knit construction with at least one knit element layer of upper **1302**. Lateral raised element **1312** and/or medial raised element **1313** may be substantially similar to, and similarly formed as lateral raised elements **514**, **1016** and/or medial raised elements **515**, **1015**, described above.

In some embodiments, the portion of fourth knitted component **1300** forming integral knit tongue **1310** may made from a different material than the remaining portion of fourth knitted component **1300**. In an exemplary embodiment, integral knit tongue **1310** may be made from an elastic yarn that has a large degree of elasticity, while the remaining portions of fourth knitted component **1300** may be made from a regular yarn that is substantially inelastic or that has a smaller degree of elasticity compared with the elastic yarn. With this arrangement, integral knit tongue portion **1310** of fourth knitted component **1300** may be configured with throat area **1320** that is allowed to stretch to accommodate a foot of a wearer inserted through an ankle opening of an article of footwear incorporating fourth knitted component **1300**.

Additionally, in some embodiments, by forming integral knit tongue **1310** of unitary knit construction with a first knit element layer of fourth knitted component **1300** that is partially decoupled from a second knit element layer, the throat area **1320** may further be permitted to stretch to allow a larger ankle opening for an article of footwear incorporating fourth knitted component **1300**. The partial decoupling of the first knit element layer and the second knit element layer may be shown in FIGS. **14** and **15**.

Referring now to FIGS. **14** and **15**, in this embodiment, upper **1302** may include a first knit element layer **1400** associated with first surface **1330** of fourth knitted component **1300** and a second knit element layer **1402** associated with second surface **1332** of fourth knitted component **1300**. In an exemplary embodiment, first knit element layer **1400** and second knit element layer **1402** may be partially decoupled at the portion of fourth knitted component **1300** associated with integral knit tongue **1310**. That is, while other portions of fourth knitted component **1300** may include a single knit element having first surface **1330** on one side and second surface **1332** on the opposite side, the partially decoupled portion of fourth knitted component **1300** includes separate first knit element layer **1400** and second knit element layer **1402** disposed adjacent to one another, but not joined along the entirety of their surfaces. Accordingly, first surface **1330** is disposed on one side of first knit element layer **1400** and second surface **1332** is disposed on one side of second knit element layer **1402**. At other portions of fourth knitted component **1300**, first knit element layer **1400** and second knit element layer **1402** may be rejoined with one another through the knitting process so as to form a single knit element extending through the remaining portion of fourth knitted component **1300**.

In an exemplary embodiment, integral knit tongue **1310** may be formed of unitary knit construction with at least one knit element layer. In one embodiment, integral knit tongue **1310** is formed of unitary knit construction with second knit element layer **1402**. As shown in FIGS. **14** and **15**, integral knit tongue **1310** is joined through knitting to second knit element layer **1402** of upper **1302** along each of a lateral side and a medial side of throat area **1320** such that integral knit tongue **1310** and second knit element layer **1402** include at least one course in common and/or include courses that are substantially continuous between integral knit tongue **1310** and second knit element layer **1402** along the sides of upper **1302** extending through throat area **1320**. Similarly, in an exemplary embodiment, raised elements, including lateral raised element **1312** and medial raised element **1313**, may be formed of unitary knit construction with first knit element layer **1400**.

In some embodiments, integral knit tongue **1310** may include multiple knit structures, including knit structures of different types, as described above. For example, integral knit tongue **1310** may include a first knit structure **1410** and a second knit structure **1412**. First knit structure **1410** may be associated with a first knit type and may be centrally located and extending along integral knit tongue **1310** from a rearward portion to the forward portion of throat area **1320**. Second knit structure **1412** may be associated with a second knit type and may be located along peripheral sides of integral knit tongue **1310** between first knit structure **1410** and each of lateral raised element **1312** and medial raised element **1313** extending similarly from the rearward portion to the forward

portion of throat area **1320**. In this embodiment, first knit structure **1410** and second knit structure **1412** may be similar made of an elastic yarn, however, first knit structure **1410** may be a double-knit jersey structure and second knit structure **1412** may be a single-knit jersey structure. As shown in FIGS. **14** and **15**, first knit structure **1410** may have a greater thickness than second knit structure **1412**.

In some embodiments, portions of first knit element layer **1400** and second knit element layer **1402** may be joined to secure first knit element layer **1400** and second knit element layer **1402** at desired locations along integral knit tongue **1310**. As shown in FIG. **14**, a first yarn **1404** may be used to join first knit element layer **1400** to second knit element layer **1402** at a first end **1406** where lateral raised element **1312** begins to extend outward over integral knit tongue **1310**. Similarly, a second yarn **1403** may be used to join first knit element layer **1400** to second knit element layer **1402** at a second end **1405** where medial raised element **1313** begins to extend outward over integral knit tongue **1310**. In some cases, first yarn **1404** and/or second yarn **1403** may include a single yarn or a plurality of yarns from fourth knitted component **1300** that join first knit element layer **1400** to second knit element layer **1402** during the knitting process. In other cases, first yarn **1404** and/or second yarn **1403** may include a stitch or a plurality of stitches that are used to join first knit element layer **1400** to second knit element layer **1402** after the knitting process.

In one embodiment, the location of first yarn **1404** and/or second yarn **1403** may be chosen to coincide with one or more of lace loops **1344** of tensile element **1340**. With this arrangement, first knit element layer **1400** and second knit element layer **1402** may be secured to each other at the location that corresponds to where a lace may be used to secure throat area **1320** of upper **1302** to fit onto a foot of a wearer of an article of footwear incorporating fourth knitted component **1300**. In contrast, the partially decoupled portion of fourth knitted component **1300** shown in FIG. **15** does not include first yarn **1404** and/or second yarn **1403** joining first knit element layer **1400** to second knit element layer **1402**. Accordingly, at the partially decoupled portion, first knit element layer **1400** and second knit element layer **1402** may be allowed to move independently of one another. This arrangement, together with the use of an elastic yarn to form one or more portions of second knit element layer forming integral knit tongue **1310**, allows throat area **1320** to stretch to allow a larger ankle opening for an article of footwear incorporating fourth knitted component **1300**.

Knitting Process for a Knitted Component

FIGS. **16** through **29** illustrate various knitting processes that may be used to manufacture a knitted component in accordance with the principles described herein. In various embodiments described herein, the different knit structures of a particular knitted component may be made using various types of knit structures, including knit types and yarn types.

In an exemplary embodiment, the integral knit tongue of a knitted component that includes raised elements along a medial side and a lateral side may be formed using a specific knitting process. For purposes of reference, FIG. **16** depicts a loop diagram of the manner in which raised elements associated with an integral knit tongue, including, for example, any of raised elements **142**, raised elements **514**, **515**, raised elements **1015**, **1016**, and/or raised elements **1312**, **1313** is formed with a knitting process **1600**.

As shown in FIG. **16**, knitting process **1600** for an integral knit tongue having raised elements may include loop diagrams indicating the direction and type of knitting operation being performed to make the integral knit tongue. It should be understood that the remaining portion of a knitted component may be made according to any suitable knitting process, knitting process **1600** details an exemplary knitting process for an integral knit tongue portion of the overall knitted component. Accordingly, in a first step **1601**, yarn is transferred to a back bed of a knitting machine. Next, in a second step **1602**, the yarn is knit along a first direction as shown, then back along a second, opposite direction in a third step **1603**. Next, in a fourth step **1604**, the yarn is transferred to a front bed of the knitting machine and the yarn is knit along the first direction in a fifth step **1605**. With this process, a raised element along one side of the integral knit tongue is formed. While an exemplary knit type is illustrated for fifth step **1605** which may form the central portion of an integral knit tongue, any suitable knit type may be used to make a central portion of the integral knit tongue having any desired knit structure.

Similarly, from fifth step **1605**, a raised element disposed on the opposite side of the integral knit tongue may also be formed. As shown in FIG. **16**, after completing knitting associated with fifth step **1605**, the yarn may be transferred to the back bed of the knitting machine at a sixth step **1606** and the yarn is knit along the second direction as shown in a seventh step **1607**, then back along in the opposite, first direction in an eighth step **1608**. The yarn may then be transferred back to the front bed of the knitting machine at a ninth step **1609** and the yarn is knit along the second direction in a tenth step **1610** along the entirety of the width of the integral knit tongue. The exemplary knitting process **1600** may be repeated multiple times to make an integral knit tongue with raised elements having the desired length along the knitted component. Similarly, portions of the integral knit tongue may be made wider or narrower by changing a number of needles that are associated with knitting process **1600**. For example, portions of knitting process **1600**, including fifth step **1605** and/or tenth step **1610**, may be varied to include a larger or smaller number of needles to correspondingly increase or decrease the width of the integral knit tongue. In addition, as noted above, other knitting processes not shown here may be used to make the remaining portions of the knitted component.

Additionally, the knit types illustrated in FIG. **16** are exemplary and in different embodiments may be varied. For example, as shown in knitting process **1600**, each raised element is made from a double-jersey half-gauge knit, whereas the central portion of the integral knit tongue is made from a single-jersey half-gauge knit. However, in other embodiments, one or more knit types may vary. For example, in some cases, the central portion of the integral knit tongue may include one or more portions of full-gauge (or "all-needle") single or double-jersey knit. In other cases, the width of various knit types along the central portion of the integral tongue may be varied repeatedly, for example, by using different numbers of needles, as noted above. Still other cases may include a combination of knit types and/or knit structures employing various combinations of knit, tuck, or float stitches.

Although knitting may be performed by hand, the commercial manufacture of knitted components is generally performed by knitting machines. FIG. **17** illustrates an exemplary embodiment of a knitting machine **1700** that is suitable for producing any of the knitted components described in the previous embodiments, including knitted component **130**, first knitted component **500**, second knitted component **800**, third knitted component **1000**, and/or fourth knitted component **1300**, as well as other configurations of knitted components not explicitly illustrated or described but made according to the principles described herein. In this embodiment, knitting machine **1700** has a configuration of a V-bed flat

knitting machine for purposes of example, but any of the knitted components or portions of knitted components may be produced on other types of knitting machines.

In an exemplary embodiment, knitting machine **1700** may include two needle beds, including a front needle bed **1701** and a back needle bed **1702**, that are angled with respect to each other, thereby forming a V-bed. Each of front needle bed **1701** and back needle bed **1702** include a plurality of individual needles that lay on a common plane, including needles **1703** associated with front bed **1701** and needles **1704** associated with back bed **1702**. That is, needles **1703** from front needle bed **1701** lay on a first plane, and needles **1704** from back needle bed **1702** lay on a second plane. The first plane and the second plane (i.e., the two needle beds **1701**, **1702**) are angled relative to each other and meet to form an intersection that extends along a majority of a width of knitting machine **1700**. As described in greater detail below, needles **1703**, **1704** each have a first position where they are retracted and a second position where they are extended. In the first position, needles **1703**, **1704** are spaced from the intersection where the first plane and the second plane meet. In the second position, however, needles **1703**, **1704** pass through the intersection where the first plane and the second plane meet.

A pair of rails, including a forward rail **1710** and a rear rail **1711**, extends above and parallel to the intersection of needle beds **1701**, **1702** and provide attachment points for multiple standard feeders **1720** and combination feeders **1722**. Each rail **1710**, **1711** has two sides, each of which accommodates either one standard feeder **1720** or one combination feeder **1722**. In this embodiment, rails **1710**, **1711** include a front side **1712** and a back side **1714**. As such, knitting machine **1700** may include a total of four feeders **1720** and **1722**. As depicted, the forward-most rail, forward rail **1710**, includes one combination feeder **1722** and one standard feeder **1720** on opposite sides, and the rearward-most rail, rear rail **1711**, includes two standard feeders **1720** on opposite sides. Although two rails **1710**, **1711** are depicted, further configurations of knitting machine **1700** may incorporate additional rails to provide attachment points for more standard feeders **1720** and/or combination feeders **1722**.

Due to the action of a carriage **1730**, feeders **1720** and **1722** move along rails **1710**, **1711** and needle beds **1701**, **1702**, thereby supplying yarns to needles **1703**, **1704**. As shown in FIG. **17**, a yarn **1724** is provided to combination feeder **1722** by a spool **1726**. More particularly, yarn **1724** extends from spool **1726** to various yarn guides **1728**, a yarn take-back spring, and a yarn tensioner before entering combination feeder **1722**. Although not depicted, additional spools may be used to provide yarns to feeders **1720** in a substantially similar manner as spool **1726**.

Standard feeders **1720** are conventionally-used for a V-bed flat knitting machine, such as knitting machine **1700**. That is, existing knitting machines incorporate standard feeders **1720**. Each standard feeder **1720** has the ability to supply a yarn that needles **1703**, **1704** manipulate to knit, tuck, and float. As a comparison, combination feeder **1722** has the ability to supply a yarn (e.g., yarn **1724**) that needles **1703**, **1704** knit, tuck, and float, and combination feeder **1722** further has the ability to inlay the yarn. Moreover, combination feeder **1722** has the ability to inlay a variety of different tensile elements, including yarn or other types of strands (e.g., filament, thread, rope, webbing, cable, or chain). Accordingly, combination feeder **1722** exhibits greater versatility than each standard feeder **1720**.

Standard feeders **1720** and combination feeder **1722** may have substantially similar configurations as the structure of standard feeders and the combination feeder described in U.S. patent application Ser. No. 13/400,511, entitled "Article Of Footwear Incorporating A Knitted Component With A Tongue", filed on Feb. 20, 2012, the disclosure of which has been incorporated by reference above.

The manner in which knitting machine **1700** operates to manufacture a knitted component will now be discussed in detail. Moreover, the following discussion will demonstrate the operation of one or more standard feeders **1720** and/or combination feeders **1722** during a knitting process. The knitting process discussed herein relates to the formation of various knitted components, which may be any knitted component, including knitted components that are similar to knitted components in the embodiments described above. For purposes of the discussion, only a relatively small section of a knitted component may be shown in the figures in order to permit the knit structure to be illustrated. Moreover, the scale or proportions of the various elements of knitting machine **1700** and a knitted component may be enhanced to better illustrate the knitting process. It should be understood that although a knitted component is formed between needle beds **1701**, **1702**, for purposes of illustration in FIGS. **18** through **29**, a knitted component is shown adjacent to needle beds **1701**, **1702** to (a) be more visible during discussion of the knitting process and (b) show the position of portions of the knitted component relative to each other and needle beds **1701**, **1702**. Also, although one rail, and limited numbers of standard feeders and combination feeders are depicted, additional rails, standard feeders, and combination feeders may be used. Accordingly, the general structure of knitting machine **1700** is simplified for purposes of explaining the knitting process.

FIGS. **18** through **21** illustrate an exemplary process of knitting a knitted component in the form of first knitted component **500**, described above. Referring to FIG. **18**, a portion of knitting machine **1700** that includes needles **1703** associated with front needle bed **1701**, needles **1704** associated with back needle bed **1702**, and forward rail **1710** is shown. Additionally, in this embodiment, knitting machine **1700** may include a first standard feeder **1800** and a second standard feeder **1802** that are substantially similar to standard feeder **1720**, described above. First standard feeder **1800** may be secured to a front side of front rail **1710** and second standard feeder **1802** may be secured to a rear side of front rail **1710**. In other embodiments, additional feeders may be used and may be located on the front or rear side of front rail **1710** and/or rear rail **1711**.

In this embodiment, a first yarn **1801** from a spool (not shown) passes through first standard feeder **1800** and an end of yarn **1801** extends outward from a dispensing tip at the end of first standard feeder **1800**. Although yarn **1801** is depicted, any other strand (e.g., filament, thread, rope, webbing, cable, chain, or yarn) may pass through first standard feeder **1800**. A second yarn **1803** similarly passes through second standard feeder **1802** and extends outward from a dispensing tip. In an exemplary embodiment, first yarn **1801** and second yarn **1803** may be used to form portions of first knitted component **500**. In this embodiment, loops of first yarn **1801** are shown forming an uppermost course of medial heel edge **507** of first knitted component **500** and are held by hooks located on ends of needles **1703** and needles **1704**. Similarly, loops of second yarn **1803** may be used to form lateral heel edge **506** of first knitted component **500**.

Next, as shown in FIG. **19**, knitting machine **1700** may use a similar process to add additional courses to the material forming first knitted component **500** to form further portions, including lateral perimeter edge **504**, medial perimeter edge **505**, lateral inner edge **508**, medial inner edge **509**, and front

inner edge **510** of integral knit tongue **512**. In this embodiment, first standard feeder **1800** and second standard feeder **1802** may form integral knit tongue **512** according to the loop diagram illustrated in FIG. **16**, above. FIG. **20** illustrates knitting machine **1700** completing the courses associated with knitting integral knit tongue **512**, lateral raised element **514**, medial raised element **515**, and a portion of the rest of first knitted component **500** forming upper **502**. FIG. **21** illustrates knitting machine **1700** nearly completing the knitting process of forming first knitted component **500**. By adding additional courses using a similar process, first knitted component **500** may be completed.

FIGS. **22** through **25** illustrate an exemplary process of knitting a knitted component in the form of third knitted component **1000**, described above. Referring to FIG. **22**, a portion of knitting machine **1700** that includes needles **1703** associated with front needle bed **1701**, needles **1704** associated with back needle bed **1702**, and forward rail **1710** is shown. Additionally, in this embodiment, knitting machine **1700** may include a first standard feeder **2200** and a second standard feeder **2204** that are substantially similar to standard feeder **1720**, described above and a combination feeder **2202** that is substantially similar to combination feeder **1722**, described above. First standard feeder **1800** and combination feeder **2202** may be secured to a front side of front rail **1710** and second standard feeder **2204** may be secured to a rear side of front rail **1710**. In other embodiments, additional feeders may be used and may be located on the front or rear side of front rail **1710** and/or rear rail **1711**.

In this embodiment, a first yarn **2201** from a spool (not shown) passes through first standard feeder **2200** and an end of yarn **2201** extends outward from a dispensing tip at the end of first standard feeder **2200**. Although yarn **2201** is depicted, any other strand (e.g., filament, thread, rope, webbing, cable, chain, or yarn) may pass through first standard feeder **2200**. A second yarn **2205** similarly passes through second standard feeder **2204** and extends outward from a dispensing tip. A third yarn **2203** passes through combination feeder **2202** to a dispensing tip. In an exemplary embodiment, third yarn **2203** may be a different type of yarn than first yarn **2201** and/or second yarn **2205**. In this embodiment, third yarn **2203** may be a tensile element or other inlaid strand. In an exemplary embodiment, first yarn **2201** and second yarn **2205** may be used to form portions of a knit element of third knitted component **1000**, whereas third yarn **2203** may be inlaid within the knit element as a tensile element of third knitted component **1000**. In other embodiments, however, third yarn **2203** may be used to form portions of a knit element of third knitted component **1000**.

In this embodiment, loops of first yarn **2201** and loops of second yarn **2205** are shown forming free portion **1014** of integral knit tongue **1010** of third knitted component **1000** and are held by hooks located on ends of needles **1703** and needles **1704**. Additionally, FIG. **23** illustrates knitting machine **1700** completing the courses forming free portion **1014**. In some embodiments, at least the final course of free portion **1014** may include cross-tuck stitches with a relatively tight or dense knit to ensure that free portion **1014** of integral knit tongue **1010** remains properly positioned on needles **1701**, **1702** during later stages of the knitting process to be joined with the remaining portion of integral knit tongue **1010**.

Knitting machine **1700** now begins the process of forming the remaining portion of the knit element forming third knitted component **1000**, in accordance with a similar knitting process discussed above. In an exemplary embodiment, loops of first yarn **2201** may then begin to form an uppermost course of medial heel edge **1007** of third knitted component **1000** and loops of second yarn **2205** may be used to form lateral heel edge **1006** of third knitted component **1000**.

Referring now to FIG. **24**, as the knitting process continues, first standard feeder **2200** and second standard feeder **2204** may continue adding courses to third knitting component **1000**, including lateral perimeter edge **1004**, medial perimeter edge **1005**, lateral inner edge **1008**, medial inner edge **1009**, and partially integral portion **1012** of integral knit tongue **1010**. In this embodiment, first standard feeder **2200** and second standard feeder **2204** may form partially integral portion **1012** of integral knit tongue **1010** according to the loop diagram illustrated in FIG. **16**, above. Additionally, in this embodiment, combination feeder **2202** inlays third yarn **2203** to form tensile element **1040**, as depicted in FIG. **24**, also in accordance with the knitting process discussed in the Inlaid Strand cases.

In an exemplary embodiment, during the knitting process depicted between FIG. **23** and FIG. **24**, free portion **1014** of integral knit tongue **1010** may remain stationary relative to needle beds **1701**, **1702**, as the portions of third knitted component **1000** move downward and may overlap free portion **1014** as successive courses are formed in third knitted component **1000**. This continues until a course is formed that is intended to join free portion **1014** to the partially integral portion **1012** of integral knit tongue **1010** formed with the rest of third knitted component **1000**. FIG. **25** illustrates knitting machine **1700** nearly completing the knitting process of forming third knitted component **1000**. By adding additional courses using a similar process, third knitted component **1000** may be completed.

Additionally, in the knitting process depicted in FIGS. **22** through **25**, the relative position of the various feeders on first rail **1710** may restrict the portions of third knitted component **1000** that may be formed by each respective feeder. For example, because of the placement of combination feeder **2202**, first standard feeder **2200** may be permitted to form both a front and back portion (associated with first surface **1030** and second surface **1032**, respectively) of third knitted component **1000** along a medial side and across partially integral portion **1012** of integral knit tongue **1010**, but be restricted from forming a portion of third knitted component **1000** along a lateral side. Similarly, second standard feeder **2204** may be permitted to form both the front and back portion of third knitted component **1000** along the lateral side and across partially integral portion **1012** of integral knit tongue **1010**, but be restricted from forming a portion of third knitted component **1000** along the medial side. With this arrangement, the knitting process depicted in FIGS. **22-25** may require that specific feeders are used to form specific portions of third knitted component **1000**.

FIGS. **26** through **29** illustrate an exemplary process of knitting a knitted component similar to fourth knitted component **1300**, described above. Referring to FIG. **26**, a portion of knitting machine **1700** that includes needles **1703** associated with front needle bed **1701**, needles **1704** associated with back needle bed **1702**, and forward rail **1710** is shown. Additionally, in this embodiment, knitting machine **1700** may include a first standard feeder **2600**, a second standard feeder **2602**, and a third standard feeder **2604** that are substantially similar to standard feeder **1720**, described above. In addition, in embodiments where fourth knitted component **1300** includes tensile elements, a combination feeder (not shown) that is substantially similar to combination feeder **1722**, described above, may be included to form tensile element **1340** according to the process described above with regard to the knitting process of third knitted component **1000** and as

described in the Inlaid Strand cases. For the purposes of ease of illustration, therefore, fourth knitted component **1300** will be illustrated in FIGS. **26** through **29** without tensile element **1340**.

Referring again to FIG. **26**, first standard feeder **2600** and second standard feeder **2602** may be secured to a front side of front rail **1710** and third standard feeder **2604** may be secured to a rear side of front rail **1710**. In other embodiments, additional feeders may be used and may be located on the front or rear side of front rail **1710** and/or rear rail **1711**.

In this embodiment, a first yarn **2601** from a spool (not shown) passes through first standard feeder **2600** and an end of yarn **2601** extends outward from a dispensing tip at the end of first standard feeder **2600**. Although yarn **2601** is depicted, any other strand (e.g., filament, thread, rope, webbing, cable, chain, or yarn) may pass through first standard feeder **2600**. A second yarn **2603** similarly passes through second standard feeder **2602** and extends outward from a dispensing tip. A third yarn **2605** also passes through third standard feeder **2604** to a dispensing tip in a similar manner. In an exemplary embodiment, second yarn **2603** may be a different type of yarn than first yarn **2601** and/or third yarn **2605**. In this embodiment, second yarn **2603** may be an elastic yarn that has a larger amount or degree of elasticity than first yarn **2601** and/or third yarn **2605**, which may be a substantially inelastic yarn or a yarn with a small amount or degree of elasticity. In an exemplary embodiment, first yarn **2601** and third yarn **2605** may be used to form lateral and medial portions of a knit element forming fourth knitted component **1300**, whereas second yarn **2603** may be used to form the elastic portion of integral knit tongue **1310** that is centrally-located within throat area **1320** of fourth knitted component **1300**. In other embodiments, however, second yarn **2603** may be further used to form other portions of the knit element of fourth knitted component **1300**.

Referring now to FIG. **27**, loops of first yarn **2601** are shown forming an uppermost course of medial heel edge **1307** of fourth knitted component **1300** and loops of third yarn **2605** may be used to form lateral heel edge **1306** of fourth knitted component **1300**. Second yarn **2603** may not yet be used to form any portion of fourth knitted component **1300**. Next, as shown in FIG. **28**, knitting machine **1700** may use a similar process to add additional courses to the material forming fourth knitted component **1300** to form further portions, including lateral perimeter edge **1304**, medial perimeter edge **1305**, lateral inner edge **1308**, and medial inner edge **1309**. In addition, at this point, second standard feeder **2602** may have begun to use second yarn **2603** to form portions of fourth knitted component **1300**, including integral knit tongue **1312**, which extends from needles **1701**, **1702** to the completed top end **1314**.

In this embodiment, second standard feeder **2602** may form integral knit tongue **1310** using an elastic yarn so as to permit throat area **1320** of fourth knitted component **1300** to stretch. In addition, fourth knitted component **1300** may be formed with one or more decoupled knit layers, as described above. FIG. **29** illustrates knitting machine **1700** completing the courses associated with knitting integral knit tongue **1310** and the rest of fourth knitted component **1300** forming upper **1302**. By adding additional courses using a similar process, fourth knitted component **1300** may be completed.

Additionally, in the knitting process depicted in FIGS. **26** through **29**, the relative position of the various feeders on first rail **1710** may restrict the portions of fourth knitted component **1300** that may be formed by each respective feeder. For example, because the placement of second standard feeder **2602** is needed to form integral knit tongue **1310** with an elastic second yarn **2603**, first standard feeder **2600** may be permitted to form both a front and back portion (associated with first surface **1330** and second surface **1332**, respectively) of fourth knitted component **1300** along only a medial side of fourth knitted component **1300**. Similarly, third standard feeder **2604** may be permitted to form both the front and back portion of fourth knitted component **1300** along only a lateral side of fourth knitted component **1300**. Accordingly, second standard feeder **2602** may be used to form integral knit tongue **1310** spanning between the lateral side and the medial side of fourth knitted component **1300**. With this arrangement, the knitting process depicted in FIGS. **26-29** may require that specific feeders are used to form specific portions of fourth knitted component **1300**.

The processes and methods for knitting a knitted component described above and illustrated in FIGS. **16** through **29** are exemplary and are not meant to be exhaustive. Therefore, it should be understood that additional knitted components including the features of the embodiments described herein, as well as similar knitted components not explicitly described herein, may be made using one or more knitting processes that are substantially similar to the knitting methods for knitted components described above and/or in the Inlaid Strands cases.

While various embodiments of the invention have been described, the description is intended to be exemplary, rather than limiting and it will be apparent to those of ordinary skill in the art that many more embodiments and implementations are possible that are within the scope of the invention. Accordingly, the invention is not to be restricted except in light of the attached claims and their equivalents. Also, various modifications and changes may be made within the scope of the attached claims.

What is claimed is:

1. A method of manufacturing a knitted component for an article of footwear, the method comprising:

knitting a portion of the knitted component defining an upper with a knitting machine, the upper including a portion of at least one of an exterior surface of the knitted component and an opposite interior surface of the knitted component; and

knitting an integral knit tongue that is of unitary knit construction with the upper with the knitting machine, the integral knit tongue extending through a throat area of the knitted component; and

wherein the integral knit tongue is joined by knitting with the knitting machine to: (1) a forward portion of the throat area, and (2) at least along a portion of both of a lateral side and a medial side of the throat area of the knitted component extending through a portion of a length of the throat area in a longitudinal direction from the forward portion to an ankle opening of the upper.

2. The method recited in claim **1**, further including a step of selecting the knitting machine to be a flat knitting machine.

3. The method recited in claim **1**, wherein the step of knitting the integral knit tongue includes forming a course of the integral knit tongue to include at least one common yarn with the upper.

4. The method recited in claim **1**, wherein the step of joining the integral knit tongue by knitting includes forming a course with the knitting machine that joins the integral knit tongue to the upper.

5. The method recited in claim **1**, wherein the integral knit tongue comprises a partially integral portion and a free portion, the method further comprising:

knitting the partially integral portion with the knitting machine of unitary knit construction with the upper at

the forward portion of the throat area and at least along the portion of both of the lateral side and the medial side of the throat area of the knitted component extending through the portion of the length of the throat area in the longitudinal direction; and

knitting the free portion with the knitting machines of unitary knit construction with the partially integral portion at a rearward portion of the integral knit tongue and remaining unattached to the remaining portions of the knitted component.

6. The method recited in claim **5**, wherein the step of knitting the free portion further comprises:

knitting the free portion of the integral knit tongue with the knitting machine;

holding the free portion on needles of the knitting machine;

knitting a first portion of the upper with the knitting machine while the free portion is held on the needles, the first portion of the upper including at least the rearward portion of the integral knit tongue;

joining the free portion to the integral knit tongue at the rearward portion; and

knitting a second portion of the upper with the knitting machine.

7. The method recited in claim **6**, wherein the step of knitting the first portion further comprises holding the free portion stationary with respect to a needle bed of the knitting machine during knitting of the first portion of the upper, and the first portion of the upper moving with respect to the free portion during knitting of the first portion of the upper;

wherein the step of joining the free portion includes forming a course with the knitting machine that joins the free portion to the integral knit tongue; and

wherein the step of knitting the second portion further comprises moving the free portion and the upper together during knitting of the second portion of the upper.

8. A method of manufacturing a knitted component for an article of footwear, the method comprising:

knitting a first portion of the knitted component defining an upper with a first feeder of a knitting machine, the upper including a portion of at least one of an exterior surface of the knitted component and an opposite interior surface of the knitted component;

knitting a second portion of the knitted component defining the upper with a second feeder of the knitting machine; and

knitting an integral knit tongue that is of unitary knit construction with the upper with at least one of the first feeder and the second feeder of the knitting machine, the integral knit tongue extending through a throat area of the knitted component; and

wherein the integral knit tongue is joined by knitting with the knitting machine to: (1) a forward portion of the throat area, and (2) at least along a portion of both of a lateral side and a medial side of the throat area of the knitted component extending through a portion of a length of the throat area in a longitudinal direction from the forward portion to an ankle opening of the upper.

9. The method recited in claim **8**, wherein the step of knitting the first portion further comprises:

knitting the exterior surface of the first portion of the upper with the first feeder;

knitting the opposite interior surface of the first portion of the upper with the first feeder; and

knitting at least a portion of the integral knit tongue with the first feeder.

10. The method recited in claim **9**, wherein the step of knitting the second portion further comprises:

knitting the exterior surface of the first portion of the upper with the second feeder;

knitting the opposite interior surface of the second portion of the upper with the second feeder; and

knitting at least a portion of the integral knit tongue with the second feeder.

11. The method recited in claim **8**, wherein the first portion of the upper is one of a medial side and a lateral side of the knitted component.

12. The method recited in claim **8**, wherein the step of knitting the integral knit tongue includes forming a course of the integral knit tongue to include at least one common yarn with the upper.

13. The method recited in claim **12**, further comprising forming at least one course of the first portion of the upper or the second portion of the upper with the knitting machine that is substantially continuous with at least one course of the integral knit tongue at the forward portion of the throat area of the upper.

14. The method recited in claim **12**, further comprising:

forming at least one course of the first portion of the upper that is substantially continuous with at least one course of the integral knit tongue along the lateral side of the throat area of the upper; and

forming at least one course of the second portion of the upper that is substantially continuous with at least one course of the integral knit tongue along the medial side of the throat area of the upper.

15. The method recited in claim **8**, wherein the integral knit tongue comprises a partially integral portion and a free portion, the method further comprising:

knitting the free portion of the integral knit tongue with at least one feeder of the knitting machine;

holding the free portion on needles of the knitting machine;

knitting the first portion of the upper with the first feeder of the knitting machine and knitting the second portion of the upper with the second feeder while the free portion is held on the needles, the first portion of the upper and the second portion of the upper including at least a rearward portion of the integral knit tongue;

joining the free portion to the integral knit tongue at the rearward portion; and

resuming knitting the first portion of the upper with the first feeder of the knitting machine and resuming knitting the second portion of the upper with the second feeder of the knitting machine.

16. A method of manufacturing a knitted component for an article of footwear, the method comprising:

knitting a first portion of the knitted component defining an upper with a first feeder of a knitting machine, the upper including a portion of at least one of an exterior surface of the knitted component and an opposite interior surface of the knitted component;

knitting a second portion of the knitted component defining the upper with a second feeder of the knitting machine; and

knitting an integral knit tongue that is of unitary knit construction with the upper with a third feeder of the knitting machine, the integral knit tongue extending through a throat area of the knitted component; and

wherein the integral knit tongue is joined by knitting with the knitting machine to: (1) a forward portion of the throat area, and (2) at least along a portion of both of a lateral side and a medial side of the throat area of the knitted component extending through a portion of a

length of the throat area in a longitudinal direction from the forward portion to an ankle opening of the upper.

17. The method recited in claim **16**, wherein the upper comprises a first type of yarn; and

wherein the integral knit tongue comprises a second type of yarn, the second type of yarn being different from the first type of yarn.

18. The method recited in claim **17**, wherein the second type of yarn is an elastic yarn.

19. The method recited in claim **16**, wherein the step of knitting the integral knit tongue includes forming a course of the integral knit tongue to include at least one common yarn with the upper.

20. The method recited in claim **19**, further comprising forming at least one course of the first portion of the upper or the second portion of the upper with the knitting machine that is substantially continuous with at least one course of the integral knit tongue at the forward portion of the throat area of the upper.

21. The method recited in claim **19**, further comprising:

forming at least one course of the first portion of the upper that is substantially continuous with at least one course of the integral knit tongue along the lateral side of the throat area of the upper; and

forming at least one course of the second portion of the upper that is substantially continuous with at least one course of the integral knit tongue along the medial side of the throat area of the upper.

22. The method recited in claim **16**, wherein the step of knitting the first portion further comprises:

knitting the exterior surface of the first portion of the upper with the first feeder; and

knitting the opposite interior surface of the first portion of the upper with the first feeder.

23. The method recited in claim **22**, wherein the step of knitting the second portion further comprises:

knitting the exterior surface of the first portion of the upper with the second feeder;

knitting the opposite interior surface of the second portion of the upper with the second feeder.

* * * * *

UNITED STATES PATENT AND TRADEMARK OFFICE

CERTIFICATE OF CORRECTION

PATENT NO. : 9,060,562 B2
APPLICATION NO. : 13/781551
DATED : June 23, 2015
INVENTOR(S) : Adrian Meir et al.

It is certified that error appears in the above-identified patent and that said Letters Patent is hereby corrected as shown below:

On the Title Page, item (72) Inventors:

"Adrain Meir" should read --Adrian Meir--

Signed and Sealed this
Eighth Day of December, 2015

Michelle K. Lee

Michelle K. Lee
Director of the United States Patent and Trademark Office