Morgan Chu
mchu@irell.com
Samuel K. Lu
slu@irell.com
Keith A. Orso
korso@irell.com
Thomas C. Werner
twerner@irell.com
Connor R. He-Schaefer
che-schaefer@irell.com
IRELL & MANELLA LLP
1800 Avenue Of The Stars, Suite 900
Los Angeles, CA 90067-4276
Telephone: (310) 277-1010
Facsimile: (310) 203-7199

Attorneys for Defendant and Counterclaim-Plaintiff Skechers U.S.A, Inc.

[Additional Counsel Listed on Signature Page]

UNITED STATES DISTRICT COURT

CENTRAL DISTRICT OF CALIFORNIA

NIKE, INC., Plaintiff, vs. SKECHERS U.S.A., INC., Defendant.	Case No. 2:23-cv-09346-AB-PVC **SKECHERS U.S.A., INC.'S RESPONSIVE CLAIM CONSTRUCTION BRIEF**

TABLE OF CONTENTS

Page

I. INTRODUCTION 1

II. ORDINARY AND CUSTOMARY MEANING 1

III. DISPUTED CLAIM TERMS 5

A. '749 Patent – "simultaneously knitting a textile element with a surrounding textile structure" 5

B. '562/'636 Patents - Upper with integral knit tongue, raised element 8

1. "integral knit tongue" 8

2. "raised element" 11

3. "ankle opening" 12

4. "throat area" 15

5. "knitting an integral knit tongue that is of unitary knit construction with the upper with the knitting machine[…], the integral knit tongue extending through a throat area of the knitted component" (Sections II.D.14-19 of Nike's Opening Brief) 16

6. "portion of the knitted component defining an upper" and variants thereof (Sections II.D.7-10 of Nike's Opening Brief) 18

C. '781 and '511 Patents – Flat knit textile element with flat knit edges 20

1. "a flat knit textile element having: (1) flat knit edges free of surrounding textile structure such that the flat knit edges are not surrounded by textile structure from which the textile element must be removed" ('781 and '511 Patents) 20

Skechers EX1010
Skechers v Nike

Page

2. The ribs "extending … toward the heel region" ('781 Patent) 22

D. All Patents – "article of footwear".....24

Skechers EX1010
Skechers v Nike

TABLE OF AUTHORITIES[1]

Page(s)

Cases

Altiris, Inc. v. Symantec Corp.,
318 F.3d 1363 (Fed. Cir. 2003) 8

Amazon.com v. Barnesandnoble.com, Inc.,
239 F.3d 1343 (Fed. Cir. 2001) 8

Aylus Networks, Inc. v. Apple Inc.,
856 F.3d 1353 (Fed. Cir. 2017) 8

Baxter Healthcare Corp. v. Mylan Lab'ys Ltd.,
346 F. Supp. 3d 643 (D.N.J. 2016) 2, 3

CCS Fitness, Inc. v. Brunswick Corp.,
288 F.3d 1359 (Fed. Cir. 2002) 22

Corrigent Corp. v. Dell Techs. Inc.,
No. 22-496, 2024 WL 2747047 (D. Del. May 29, 2024) 2, 3

Eon Corp. IP Holdings v. Silver Springs Networks, Inc.,
815 F.3d 1314 (Fed. Cir. 2016) 1, 4

Goldenberg v. Cytogen, Inc.,
373 F.3d 1158 (Fed. Cir. 2004) 2, 11

Hoist Fitness Sys., Inc. v. TuffStuff Fitness Int'l, Inc.,
No. 17-01388, 2018 WL 11350298 (C.D. Cal. Oct. 24, 2018) 3

Indacon, Inc. v. Facebook, Inc.,
824 F.3d 1352 (Fed. Cir. 2016) 2, 10

Irdeto Access, Inc. v. Echostar Satellite Corp.,
383 F.3d 1295 (Fed. Cir. 2004) 2, 10, 11

Ironburg Inventions Ltd. v. Valve Corp.,
64 F.4th 1274 (Fed. Cir. 2023) 3

[1] Unless otherwise noted, all emphases are added.

Skechers EX1010
Skechers v Nike

J.T. Eaton & Co. v. Atl. Paste & Glue Co.,
106 F.3d 1563 (Fed. Cir. 1997) 1

Largan Precision Co., Ltd. v. Genius Electronic Optical Co., Ltd.,
No. 13-cv-02502, 2014 WL 5358426 (N.D. Cal. Oct. 20, 2014) 5, 18

Maytag Corp. v. Electrolux Home Products, Inc.,
411 F. Supp. 2d 1008 (N.D. Iowa 2006) 3

Nike, Inc. v. Adidas AG,
812 F.3d 1326 (Fed. Cir. 2016) 20

NobelBiz, Inc. v. Global Connect, LLC,
701 F. App'x 994 (Fed. Cir. July 19, 2017) 4

O2 Micro Int'l Ltd. v. Beyond Innovation Tech. Co., Ltd.,
521 F.3d 1351 (Fed. Cir. 2008) ..... *passim*

Omega Eng'g, Inc. v. Raytek Corp.,
334 F.3d 1314 (Fed. Cir. 2003) 22

Ormco Corp. v. Align Tech., Inc.,
498 F.3d 1307 (Fed. Cir. 2007) 18

Phillips v. AWH Corp.,
415 F.3d 1303 (Fed. Cir. 2005) (en banc) 1, 4, 5

Styku, LLC v. Fit3D, Inc.,
No. CV 17-01882, 2018 U.S. Dist. Lexis 206444 (C.D. Cal.
Dec. 4, 2018) 2, 3

Sulzer Textil A.G. v. Picanol N.V.,
358 F.3d 1356 (Fed. Cir. 2004) 4

Williamson v. Citrix Online, LLC,
792 F.3d 1339 (Fed. Cir. 2015) 11

Zipshade Indus. (B.V.I.) Corp. v. Lowes Home Ctrs., LLC,
No. 2:14-cv-05934, 2017 WL 2766163 (C.D. Cal. June 26, 2017) 22

Skechers EX1010
Skechers v Nike

I. INTRODUCTION

Simply proposing that no claim construction is necessary, as Nike does throughout its brief, is an invitation to error where, as here, not every term has such a meaning to a person having ordinary skill in the art and, for those terms that do, actual disputes exist over what that ordinary and customary meaning is. As set forth herein and in Skechers' opening brief, Skechers' constructions should be adopted.

II. ORDINARY AND CUSTOMARY MEANING

For every single claim term identified for construction by Skechers, Nike's position is: "Ordinary and customary meaning, i.e. [repeat claim term]; no further construction necessary." Nike's blanket position is flawed for at least two fundamental reasons.

First, Nike's position wrongly assumes that every claim term has an ordinary and customary meaning. "[T]he question is not whether there is a settled ordinary meaning of the terms in some abstract sense of the words." *Eon Corp. IP Holdings v. Silver Springs Networks, Inc.*, 815 F.3d 1314, 1321 (Fed. Cir. 2016). After all, rarely does a claim term consist of words that cannot be found in a dictionary. The question is whether the claim term has an ordinary and customary meaning in the art.

If it exists, "the ordinary and customary meaning of a claim term is the meaning that the term would have to a person of ordinary skill in the art in question at the time of the invention…." *Phillips v. AWH Corp.*, 415 F.3d 1303, 1313 (Fed. Cir. 2005) (en banc). "Importantly, the person of ordinary skill in the art is deemed to read the claim term not only in the context of the particular claim in which the disputed term appears, but in the context of the entire patent, including the specification." *Id.*

It is not uncommon for a claim term to lack an ordinary and customary meaning in the art. *See, e.g.*, *J.T. Eaton & Co. v. Atl. Paste & Glue Co.*, 106 F.3d 1563, 1570 (Fed. Cir. 1997) ("[T]he dispositive claim limitation is a term unknown to those of ordinary skill in the art at the time the patent application was filed."); *Goldenberg v. Cytogen, Inc.*, 373 F.3d 1158, 1164 (Fed. Cir. 2004) ("The parties agree that the term

Skechers EX1010
Skechers v Nike

… has no accepted meaning to one of ordinary skill in the art….”); *Indacon, Inc. v. Facebook, Inc.*, 824 F.3d 1352, 1357 (Fed. Cir. 2016) (“We agree … that these terms have no plain or established meaning to one of ordinary skill in the art.”).

When a term “has no accepted meaning to one of ordinary skill in the art,” courts “construe it only as broadly as is provided for by the patent itself.” *Goldenberg*, 373 F.3d at 1164; *Irdeto Access, Inc. v. Echostar Satellite Corp.*, 383 F.3d 1295, 1300 (Fed. Cir. 2004) (“[A]bsent such an accepted meaning, we construe a claim term only as broadly as provided for by the patent itself.”); *Indacon*, 824 F.3d at 1357 (terms having “no plain or established meaning to one of ordinary skill in the art … ordinarily cannot be construed broader than the disclosure in the specification”).

Second, Nike’s blanket position is flawed because it assumes that if a claim term does have an ordinary and customary meaning, then no construction will be required. But the parties often do not agree on what the ordinary and customary meaning of a claim term is. *See, e.g., Corrigent Corp. v. Dell Techs. Inc.*, No. 22-496, 2024 WL 2747047, at *6 n.7 (D. Del. May 29, 2024) (“[T]he parties here dispute what the plain and ordinary meaning is.”); Ex. 1[2] (*Styku, LLC v. Fit3D, Inc.*, No. CV 17-01882, 2018 U.S. Dist. Lexis 206444, at *26 (C.D. Cal. Dec. 4, 2018)) (“The Court agrees with the parties that nothing in the intrinsic record indicates that ‘interface’ is being used in a manner that departs from its ordinary meaning, but finds it necessary to resolve the dispute over the plain meaning.”); *Baxter Healthcare Corp. v. Mylan Lab’ys Ltd.*, 346 F. Supp. 3d 643, 659-60 (D.N.J. 2016) (“[T]he parties agree that this commonly-understood term should be construed in accordance with its ordinary meaning, but diverge on the actual plain and ordinary meaning.”); *Maytag Corp. v. Electrolux Home Products, Inc.*, 411 F. Supp. 2d 1008, 1037 (N.D. Iowa 2006) (“It

[2] All references to lettered exhibits are to exhibits to the Declaration of Michael M. Rosen filed in support of Skechers’ Opening Claim Construction Brief. All references to numbered exhibits are to exhibits to the Declaration of Connor R. He-Schaefer filed in support of this brief.

Skechers EX1010
Skechers v Nike

has been this court's experience that parties in patent cases rarely agree on the 'ordinary meaning [of patent terms] as understood by a person of skill in the art….'").

Alternatively, the parties may agree on the ordinary and customary meaning of a term but dispute whether "the patentee act[ed] as a 'lexicographer' by redefining a claim phrase to have a special meaning," or whether the ordinary and customary meaning does not apply because the "patentee ma[de] a 'specification disclaimer' or 'specification disavowal'" or "prosecution history disclaimer." D.I. 55 at 4-5.

Whatever the nature of the disagreement, it is well settled that "[w]hen the parties present a fundamental dispute regarding the scope of a claim term, it is the court's duty to resolve it," as the Federal Circuit ruled in *O2 Micro Int'l Ltd. v. Beyond Innovation Tech. Co., Ltd.*, 521 F.3d 1351, 1362 (Fed. Cir. 2008).

"*O2 Micro* does not require an ***affirmative*** construction for a claim term simply because its meaning is disputed by the parties." *Hoist Fitness Sys., Inc. v. TuffStuff Fitness Int'l, Inc.*, No. 17-01388, 2018 WL 11350298, at *8 (C.D. Cal. Oct. 24, 2018). Resolution of a claim construction dispute can take any number of forms. For example, a court can provide an affirmative construction in accordance with the ordinary and customary meaning of a claim term. *See, e.g.*, *Ironburg Inventions Ltd. v. Valve Corp.*, 64 F.4th 1274, 1286 (Fed. Cir. 2023) ("The district court … explain[ed] that 'the patent[] use[s] the word "elongate" in its usual sense, as a modifier indicating that an element is "notably long in comparison to its width,"' stated '[t]he term "elongate member" means what it says' and gave the term its plain and ordinary meaning."); *Corrigent*, 2024 WL 2747047, at *6-7 (construing "subsidiary module"); *Styku,* 2018 U.S. Dist. Lexis 206444, at *25-29 (construing "interface"); *Baxter*, 346 F. Supp. 3d at 659-63 (construing "aqueous"); *Maytag*, 411 F. Supp. 2d at 1043-47 (construing "groove"). But a court can also provide written guidance regarding the scope of the ordinary and customary meaning. *See, e.g.*, *Hoist Fitness Sys.,* 2018 WL 11350298, at *8 (rejecting a party's "narrower construction" and "otherwise address[ing] the parties' claim construction disputes").

Skechers EX1010
Skechers v Nike

Indeed, in all of the cases cited by Nike for the proposition that ordinary and customary meaning should apply, the courts provided either an affirmative claim construction or written guidance regarding the scope of the ordinary and customary meaning. *See* Ex. 2 (chart of cases cited by Nike in which the Federal Circuit found that disputed claim terms had their ordinary and customary meaning, but provided such affirmative claim constructions or written guidance).

And the Federal Circuit has repeatedly found legal error when a district court simply states that no construction is necessary without addressing a claim construction dispute. *O2 Micro*, 521 F.3d at 1361 (finding error where "the district court failed to resolve the parties' dispute" when it ruled that the term "'needs no construction' because the term has a 'well-understood definition'"); *Eon Corp.*, 815 F.3d at 1319 (finding "legal error" because "[b]y determining only that the terms should be given their plain and ordinary meaning, the court left [a] question of claim scope unanswered, leaving it for the jury to decide"); *NobelBiz, Inc. v. Global Connect, LLC*, 701 F. App'x 994, 997 (Fed. Cir. July 19, 2017) (finding "[t]he same error" as in *O2 Micro* where "the parties presented a clear dispute regarding the proper scope of the claims" but "the district court concluded that because 'the term is not ambiguous and will easily be understood by a jury, plain and ordinary meaning will prevail'" without offering a construction).

Even in the absence of a dispute, construing a claim term in accordance with its ordinary and customary meaning may be necessary simply because the terms are technical or "have a particular meaning in a field of art" with which the jurors cannot be expected to have familiarity. *Phillips*, 415 F.3d at 1314. "[I]n many cases, the meaning of a claim term as understood by persons of skill in the art is not readily apparent." *O2 Micro*, 521 F.3d at 1360. Courts construe claims "so that the jury will be able to 'intelligently determine the questions presented'" to them. *Sulzer Textil A.G. v. Picanol N.V.*, 358 F.3d 1356, 1366 (Fed. Cir. 2004) (citation omitted); *Largan Precision Co., Ltd. v. Genius Electronic Optical Co., Ltd.*, No. 13-cv-02502, 2014

Skechers EX1010
Skechers v Nike

WL 5358426, at *3–4 (N.D. Cal. Oct. 20, 2014) (explaining that "even a term with a plain and ordinary meaning … may require construction" to "explain[], in language comprehensible to a jury, what the term means to a person of ordinary skill in the art").

"In some cases, the ordinary meaning of claim language as understood by a person of skill in the art may be readily apparent even to lay judges" or may be coextensive with the ordinary and customary meaning generally. *Phillips*, 415 F.3d at 1314. But courts often articulate constructions even then, though "the claim construction in such cases involves little more than the application of the widely accepted meaning of commonly understood words." *Id.*

III. DISPUTED CLAIM TERMS

A. <u>'749 Patent – "simultaneously knitting a textile element with a surrounding textile structure"</u>

Nike contends that the "word 'surrounding' is not the type of technical term that requires clarification" but insists that Figure 14 shows that "the word 'surrounding' as used in the '749 patent is not limited to 'border[ing] on all sides.'" D.I. 55 at 8. Nike is either disputing the ordinary meaning of "surrounding" or is arguing that the patentee acted as its own lexicographer, but it does not disclose which position it is taking and fails to support any position whatsoever. It never articulates an ordinary meaning for "surrounding," let alone offer any evidentiary support for one. Nor does it point to any lexicography on the part of the applicants. The term "surrounding textile structure" does not appear anywhere in the patent specification, apart from in the claims.

Skechers EX1010
Skechers v Nike

Nike's reliance on Figure 14 is misplaced. The figure is a cross-sectional view of the forefoot area of a shoe showing multiple layers of an upper, including an interior layer 240 that encircles or encloses a void for receiving a foot. A colorized version of Figure 14 (inset, annotated) shows interior layer 240 in blue. Nike argues that "the word 'surrounding' as used in the '749 Patent is not limited to 'border[ing] on all sides'" because the patent states that interior layer 240 "may be formed of a moisture-wicking textile that removes perspiration from the area immediately surrounding the foot" " (quoting '749 Patent at 10:45-48) and yet Figure 14 allegedly shows "the interior layer only 'immediately surround[s]' the foot on three sides." D.I. 55 at 8. But that argument should be rejected even if interior layer 240—which extends all the way around the foot—is deemed not to "immediately surround[]" the foot. The patent excerpt on which Nike relies does not describe interior layer 240 as "immediately surrounding" the foot. Rather, the excerpt describes interior layer 240 as formed of a material "that removes perspiration from ***the area*** immediately surrounding the foot." '749 Patent at 10:47-48.

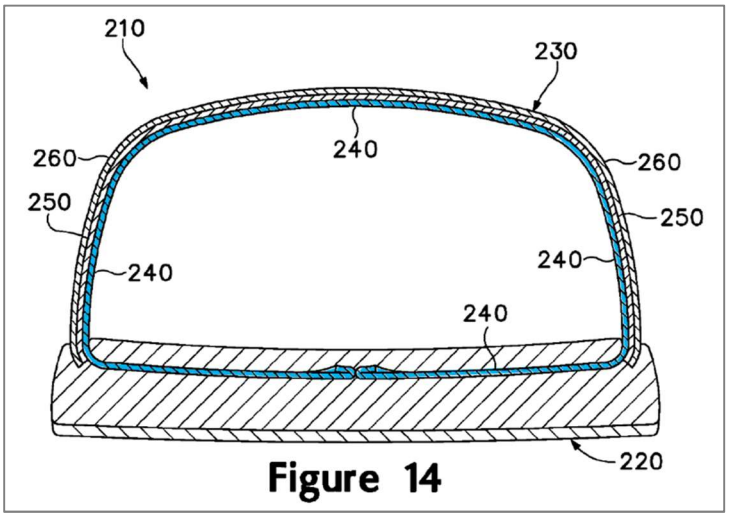

Figure 14

A layer need not itself "immediately surround" the foot in order to remove perspiration from the area immediately surrounding the foot. For example, a layer can remove perspiration from the area immediately surrounding the foot even if some parts of the layer are not in direct contact with the foot—e.g., it can wick perspiration away from something that ***is*** in direct contact with the foot. The bottom part of interior layer 240 in Figure 14, for instance, can wick perspiration away from something

placed on top of it—e.g., the red item in Nike's colorized figure—such as an insole. *See* D.I. 55 at 8.

A layer that does not encircle or enclose a foot also can remove perspiration from the area immediately surrounding the foot. For example, because the region adjacent to the top of the foot is part of the area immediately surrounding the foot, a layer that removes perspiration from that region is removing perspiration from the area immediately surrounding the foot—even if it does not also remove perspiration from other parts of that area. There is less total perspiration in the area immediately surrounding the foot than there was before.

Even if the patent's description of Figure 14 could be read to imply that the word "surrounding" is "not limited to 'border[ing] on all sides'" (and there is no basis to do so), that would hardly be enough to meet what Nike describes as the "exacting" standard for "redefining a claim phrase to have a special meaning," D.I. 55 at 4, because the patent also plainly uses "surrounded" consistent with its ordinary meaning when it describes fibers that "may have the configuration of covered LYCRA, wherein the fiber includes a LYCRA core that is ***surrounded*** by a nylon sheath," '749 Patent at 8:34-36.

Further, Nike's position that "the word 'surrounding' as used in the '749 Patent is not limited to 'border[ing] on all sides'" is inconsistent with the position that Nike and its expert are concurrently taking in an *inter partes* review (IPR) proceeding brought by a third party challenging the validity of the '749 Patent based on a reference to Zuckerman. A colorized version of FIG. 1 in Zuckerman from Nike's papers (inset), shows purple textile structures adjacent to a green textile "blank." Ex. D at 33. In the IPR, just two weeks ago, Nike and its expert

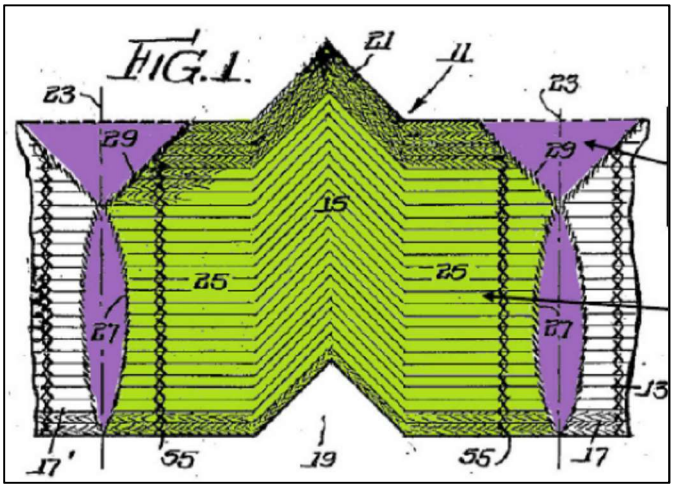

argued that "a POSITA [person of ordinary skill in the art] would not have understood Zuckerman's textile structures (one adjacent the blank on each side) to be a textile structure 'surrounding' the blank." *Id.* (citing Ex. E at ¶¶ 41-43). Nike cannot have it both ways, arguing for broad claim scope (in this Court) for infringement and narrow scope (in the PTAB) for validity: "Because the claims of a patent measure the invention at issue, the claims must be interpreted and given the same meaning for purposes of both validity and infringement analyses." *Amazon.com v. Barnesandnoble.com, Inc.*, 239 F.3d 1343, 1351 (Fed. Cir. 2001). Further, "statements made by a patent owner during an IPR proceeding can be considered during claim construction and relied upon to support a finding of prosecution disclaimer." *Aylus Networks, Inc. v. Apple Inc.*, 856 F.3d 1353, 1360-61 (Fed. Cir. 2017).

B. <u>'562/'636 Patents - Upper with integral knit tongue, raised element</u>

1. <u>"integral knit tongue"</u>

Nike does not dispute that the '562 and '636 Patents coined the term "integral knit tongue," but argues that "integral knit tongue" is "not a technical phrase that requires further clarification" and asserts that no construction is necessary "because when construing a phrase comprised of several common words, courts simply apply the established meanings of the individual words." D.I. 55 at 18 (internal quote omitted). Nike cites the Federal Circuit's treatment of the term "boot selection flag" in *Altiris, Inc. v. Symantec Corp.*, 318 F.3d 1363, 1372 (Fed. Cir. 2003), but in *Altiris*, the Federal Circuit did not rule that no construction was necessary. Nor did it purport to construe the term simply by repeating it. Rather, the court construed "boot selection flag" to mean "one or more bits of data or information indicating which boot cycle (automation or normal) has been selected." *Id.* at 1373. It further clarified that "'boot selection flag' encompasses the use of multiple flags to select the boot cycle." *Id.*

Skechers EX1010
Skechers v Nike

Given what it means for two things to be integrated, given what knitting is, and given the well-understood shape of a tongue both generally and in the context of shoes, applying the established meanings of individual words, an "integral knit tongue" would be a flap of knit material connected with the rest of an upper by knitting (as opposed to, e.g., stitching) at a forward area of the upper over the instep, as exemplified in the inset drawing, where the two sides of the tongue (highlighted in yellow) are not connected to the upper. But the claims themselves contemplate that an "integral knit tongue" can have sides connected by knitting to the upper. Accordingly, the claimed integral knit tongue "loses the features characteristic for a tongue," Ex. F at 10 (Written Opinion of the International Searching Authority); *see also* D.I. 56 at 6-7, making it impossible to determine whether certain articles of footwear do or do not have an "integral knit tongue" and rendering the claims indefinite—unless the applicants defined an "integral knit tongue" to include something more. Here, the applicants did just that. They implicitly defined "integral knit tongue" to be the "throat area between overhanging portions of the upper or adjacent to one or more raised elements." *See* D.I. 56 at 8-11.

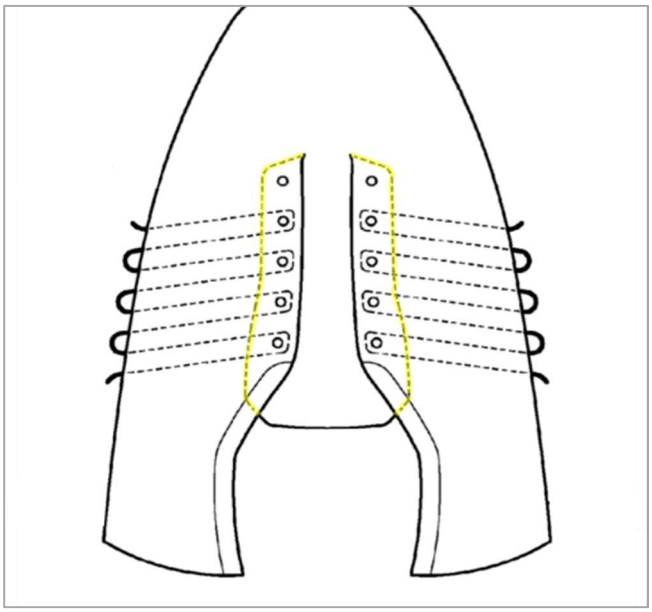

Nike argues that this construction is "inconsistent with the intrinsic record" because "the phrase 'overhanging portion' does not appear once in any of the claims of the '562 or '636 patents." D.I. 55 at 18-19. But that is no inconsistency. In fact, one might expect that the phrase "overhanging portion" would not appear in any claims, given the appearance of "integral knit tongue," which the applicants implicitly defined with respect to overhanging portions. In any event, Nike cites no authority for the

Skechers EX1010
Skechers v Nike

proposition that claim constructions must be limited to repeating and repositioning words that already appear in the claims.

Nike also argues that Skechers' construction "would improperly render the phrase 'raised element' elsewhere in the independent claims of the '636 patent superfluous" because those claims expressly require "at least one raised element…." D.I. 55 at 19. But Skechers' construction of "integral knit tongue" does not likewise require at least one raised element. Rather, it disjunctively describes the "integral knit tongue" as "between overhanging portions of the upper ***or*** adjacent to one or more raised elements." Accordingly, under Skechers' construction, an "integral knit tongue" need not include any raised elements, consistent with the patents, which, Nike points out, "expressly explain that 'raised elements' are not required." *Id.* at 20.

Nike contends that Skechers' construction should not reference "overhanging portions" and "raised elements" because "the specifications only provide such features as examples" that can be found "[i]n some embodiments" or "may" be included in others. *Id.* But Skechers' construction does not require that overhanging portions are found in all embodiments or that raised elements are always included. Rather, consistent with the specification, Skechers' construction provides that overhanging portions can be found in some embodiments and raised elements may be included in others.

Moreover, Nike cannot escape the patents' implicit definition of "integral knit tongue" by characterizing the supporting disclosures of the patents as merely exemplary. As noted above, Nike does not dispute that the '562 and '636 Patents coined the term "integral knit tongue." There is no accepted meaning in the art, and "absent such an accepted meaning, [the Federal Circuit will] construe a claim term only as broadly as provided for by the patent itself"—even if the patent uses "language such as 'for example,' 'may,' and 'normally.'" *Irdeto*, 383 F.3d at 1300; *Indacon*, 824 F.3d at 1357 (reiterating that terms having "no accepted meaning in the art … ordinarily cannot be construed broader than the disclosure in the specification"). Here,

Skechers EX1010
Skechers v Nike

Nike fails to offer even a hypothetical example of an "integral knit tongue" that is not the throat area between overhanging portions of an upper or adjacent to one or more raised elements, let alone identify in the specification any disclosure of such an "integral knit tongue." Accordingly, Skechers' proposed construction should be adopted.

2. "raised element"

Nike does not contend that "raised element" is a term of art. Like "integral knit tongue," "raised element" is a coined term that has no accepted meaning in the field. Indeed, the word "element" is simply a verbal construct signifying a "thing"—in the Federal Circuit's view, a "nonce word." *See, e.g.*, *Williamson v. Citrix Online, LLC*, 792 F.3d 1339, 1350 (Fed. Cir. 2015) (holding that the word "element" is a "nonce word[] that reflect[s] nothing more than [a] verbal construct…."). Accordingly, the term must be construed "only as broadly as provided for by the patent itself." *Irdeto*, 383 F.3d at 1300; *Goldenberg*, 373 F.3d at 1164 (construing "the term 'marker substance' … only as broadly as is provided for in the patent itself" because the term "has no accepted meaning to one of ordinary skill in the art").

Nike argues that "raised element" should not be construed to be "a flap or overhanging portion that extends outward away from the surface of the upper and along the length of the side of the tongue" because the specification says that "[r]aised elements ***may be*** a portion of integral knit tongue 512 that are formed through the knitting process to be a flap or overhanging portion of integral knit tongue 512[.]" D.I. 55 at 20 (emphasis in original). But Nike fails to identify any other general or specific description or disclosure of a "raised element" in the specification. The term "raised element" does not extend to other, undisclosed structures—to be identified later by Nike at its convenience—simply because the specification uses the word "may" in connection with the only description of "raised elements" that appears in the patent. *See, e.g., Irdeto*, 383 F.3d at 1300; *Goldenberg*, 373 F.3d at 1164.

Nike also argues that Skechers' construction is "inconsistent with Skechers' other proposed constructions" on the ground that "Skechers proposes that an 'integral knit tongue' must include a 'throat area between ***overhanging portions*** of the upper ***or adjacent to one or more raised elements***,' which it separately defines here as 'overhanging portions.'" D.I. 55 at 20 (emphasis in original). But there is no inconsistency. Skechers' construction of "integral knit tongue" refers to an area between "overhanging portions **of the upper**," e.g., in the absence of raised elements, whereas Skechers' construction of "raised element" describes the raised element itself as being a flap or overhanging portion. In any event, these constructions of coined terms are both driven by the specification, as they must be. *See, e.g.,* '562 Patent at FIG. 9 and 11:61-67 (describing a "portion of upper 802 extending out to lateral inner edge 816 and medial inner edge 817" and "integral knit tongue 812 extend[ing] below lateral inner edge 816 and medial inner edge 817 of upper 802"); *see also id.* at FIG. 6, 9:63-66 (describing raised elements as "a flap or overhanging portion of integral knit tongue 512").

3. "ankle opening"

The parties dispute the meaning of "ankle opening" and claim construction is therefore necessary. *O2 Micro*, 521 F.3d at 1362. A live dispute exists because Skechers' claim construction requires the ankle opening formed by the knitted component to, among other things, have "edges … encircling the ankle when a foot is fully inserted into the opening." In contrast, Nike argues, relying upon Figure 5, that the knitted component has a "generally U-shaped configuration" that "does ***not*** 'encircl[e] the ankle.'" D.I. 55 at 11 (citing FIG. 5).

Nike's argument ignores that Skechers' proposed construction provides that the ankle opening is "encircling the ankle ***when a foot is fully inserted into the opening***" of the upper—*i.e,* when the upper has been assembled. Figure 5 depicts a flat knitted

Skechers EX1010
Skechers v Nike

component ***before*** it is assembled into an upper. Thus, Nike's reliance upon Figure 5 makes no sense in view of the claim language and the specification.

The claims require the "knitted component," such as item 500 depicted in Figure 5, to "defin[e] an upper," which the specification describes as in turn "defining a void for receiving a foot," '562 Patent at 2:29, and having an "ankle opening." *See, e.g.*, *id.* at 2:49; cl. 1. The demonstrative below, based on Fig. 5 of the Patent, shows how the knitted component is assembled to form an upper.

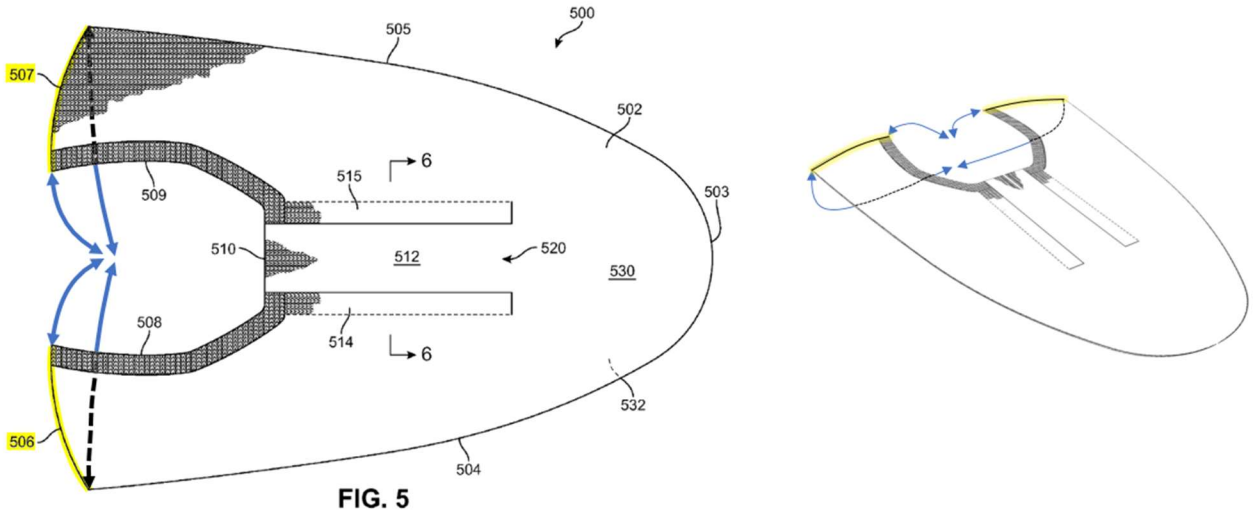

FIG. 5

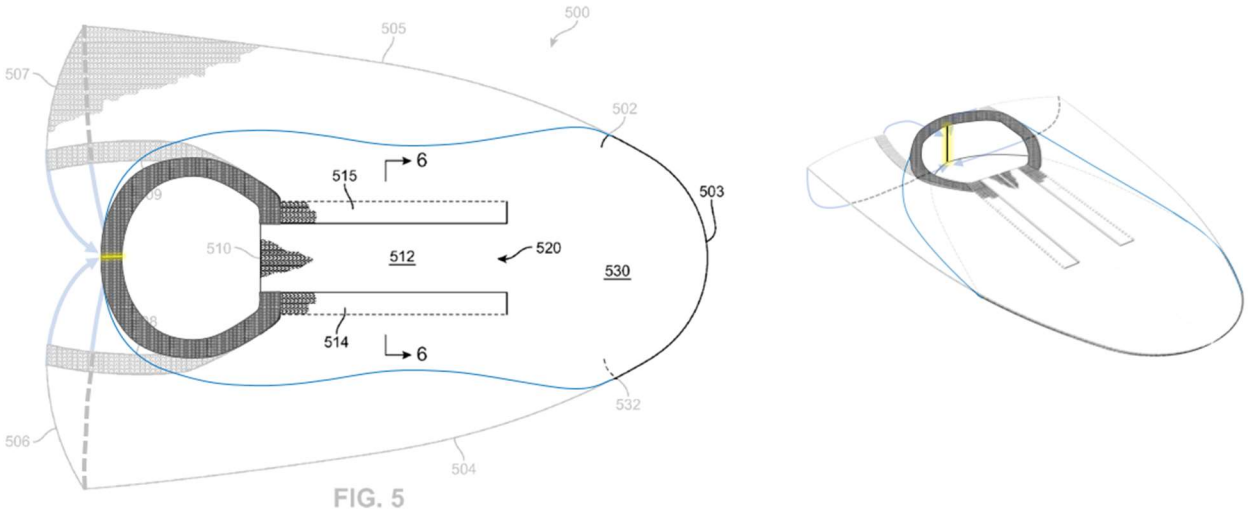

FIG. 5

The specification describes, consistent with the claims, how the knitted component depicted in Figure 5 is intended to be assembled into an upper with all of these claimed limitations: "lateral heel edge 506 and medial heel edge 507 ***are joined to each other*** and extend vertically in a heel region." *Id.* at 8:47-49. In other words, as shown in the above demonstrative and inset in Figure 1 (annotated), the space between lateral heel edge 506 and medial heel edge 507 forming the open part of the "U" identified and relied upon by Nike ***disappears*** when the two edges are stitched together to form the upper 120 with ankle opening 121. *Id.* at 6:27-28. Importantly, the specification does not identify any ankle opening in the unassembled upper of Figure 5. The patent identifies ankle openings in assembled uppers. *See, e.g.*, *id.* (Figures 2-3).[3]

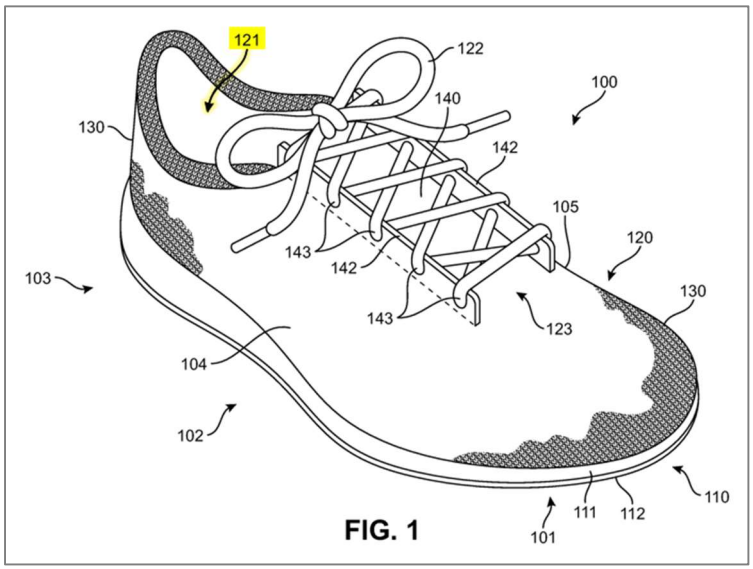

FIG. 1

Nike argues that Skechers' construction is inconsistent with the specifications of the '562 and '636 Patents because the patents supposedly state that a "lateral inner edge 1008 and a medial inner edge 1009" of knitted component 1000 in Figure 10 "may form an ankle opening," D.I. 55 at 11 (quoting '562 Patent at 12:31-34), and yet Figure 10 supposedly illustrates that those edges "would not 'encircl[e] the ankle when the foot is fully inserted into the opening' in view of the 'free portion 1014' of the integral knit tongue." *Id.* (referring to annotated figures, D.I. 55 at 12). But the specifications do not say that the lateral and medial edges ***alone*** may form an ankle opening. In fact, the specifications describe an "inner perimeter" of knitted component

[3] Nike argues that the claims do not require that the "'portion of the knitted component' have its edges joined," D.I. 55 at 11, but Skechers never took the position that the claimed portion of the knitted component must have its edges joined.

1000 that "***includes*** a later inner edge 1008 and a medial inner edge 1009." '562 Patent at 12:31-33. It is this inner perimeter, marked in red in Nike's annotated figure, that forms the ankle opening when the knitted component 1000 is assembled to form an upper. *See* D.I. 55 at 12.

4. <u>"throat area"</u>

Nike's brief confirms that the boundaries of the "throat area" (a term with which a lay jury is unlikely to be familiar in the footwear context) are, indeed, in dispute, thereby requiring construction. *See O2 Micro*, 521 F.3d at 1362. The specification consistently describes "throat area" as follows: "In some embodiments, a throat area 123 extends from ankle opening 121 in heel region 103 over an area corresponding to an instep of the foot to an area adjacent to forefoot region 101." '562 Patent at 6:28-31; *see also id.* at Figure 1 (inset; annotated); 8:52-58; 9:34-59. Although this passage references "some embodiments," all other embodiments of "throat areas" described in the specification conform to this description. *See, e.g.*, FIG. 5 (element 520), FIG. 8 (element 820), FIG. 10 (element 1020), and element 1320 (identified but not appearing in the figures).

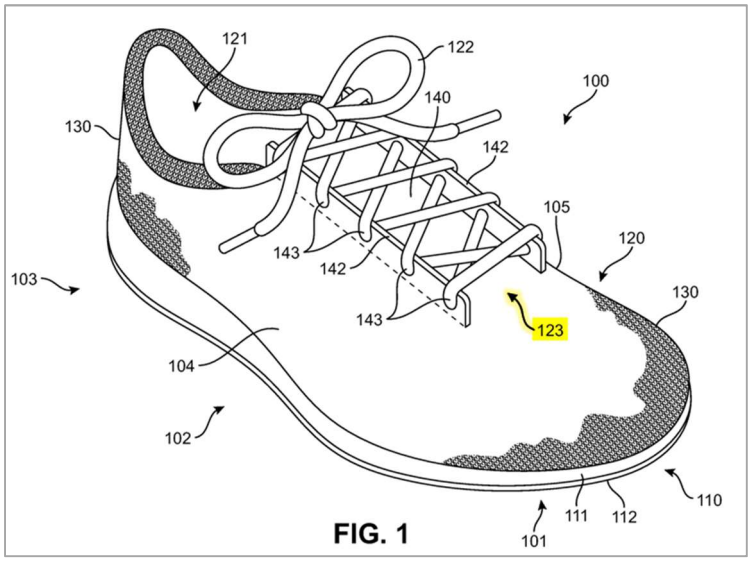

FIG. 1

Nike argues that the applicants' consistent description of "throat area" would "contradict the surrounding claim language for each independent Throat Area Claim." D.I. 55 at 17. But there is no such contradiction. Instead, Nike confuses the claimed throat area with the integral knit tongue: the former is ***a location on the upper*** into which the latter, ***a component of the shoe***, extends. That the throat area extends from

an ankle opening to an area adjacent to the forefoot region in no way precludes the integral knit tongue from extending from a portion of the throat area to an ankle opening.

5. "knitting an integral knit tongue that is of unitary knit construction with the upper with the knitting machine[…], the integral knit tongue extending through a throat area of the knitted component" (Sections II.D.14-19 of Nike's Opening Brief)

This claim term is related to the next claim term, "'portion of the knitted component defining an upper' and variants thereof." Nike's contention that "[t]here is no express requirement that the knitted component defining the upper must include the entire, or 'rest of,' the upper," D.I. 55 at 21, is belied by both the claim language and the specification. As Skechers explained in its opening brief for "portion of the knitted component defining the upper," the claim language requires that "the knitted component defin[es the] upper." *See* D.I. 56 at 15. Nike would have this Court re-write the claims to recite instead that "the knitted component defin[es] ***a portion of*** the upper" such that other non-knitted components could define other portions of the upper. But that is not what the claims say. (By way of example, a lid does not "define a box;" it only "defines a portion of a box"). The Court should decline Nike's invitation to re-write the claims.

Moreover, the specification confirms that the claim language "an integral knit tongue that is of ***unitary knit construction*** with the upper" means that the tongue and the upper are a one-piece knit element:

> As used herein ***and in the claims***, ***a knitted component … is defined as being formed of "unitary knit construction" when formed as a one-piece element through a knitting process***.... A unitary knit construction may be used to form a knitted component having structures or elements (including upper 502 and integral knit tongue 512) that include one or more courses of yarn or other knit material that are joined such that the structures or elements include at least one course in common (i.e., sharing a common yarn) and/or include courses that are substantially continuous between each of the structures or elements. With this

> arrangement, a one-piece element of unitary knit construction is provided.

'562 Patent at 7:62-8:12. This comports with the Summary of the Invention in both the '562 and '636 Patents, which explains that "[t]he upper and the integral knit tongue are formed as a ***one-piece knit element***." *Id.* at 2:25-26; '636 Patent at 2:29-31.

In contrast, Nike relies on the absence of the words "entire" or "rest of" from the claims, and takes out of context a sliver of the specification (6:54-55) that, when read in full, describes a knitted component 130 that does in fact define an upper:

> In contrast, a majority of upper 120 is formed from a ***knitted component 130, which extends through each of forefoot region 101, midfoot region 102, and heel region 103, along both lateral side 104 and medial side 105, over forefoot region 101, and around heel region 103***.

'562 Patent at 6:54-59. Other elements may then be added to the exterior or interior surfaces of the knitted component such that additional portions of the ***already defined*** upper are formed:

> In addition, knitted component 130 forms portions of both an exterior surface and an opposite interior surface of upper 120. As such, knitted component 130 defines at least a portion of the void within upper 120. In some configurations, knitted component 130 may also extend under the foot. Referring to FIGS. 4A and 4B, however, a strobel sock 125 is secured to knitted component 130 and an upper surface of midsole 111, thereby forming a portion of upper 120 that extends under sockliner 113.

Id. at 6:59-67. Nike points to nothing else in the intrinsic record to support its interpretation. *See* D.I. 55 at 21-25.

With respect to similar terms in the '636 Patent, Nike objects that Skechers' construction "adds the limitation 'unitary knit construction'" into the claims. *Id.* at 24. But like the '562 Patent, the '636 Patent specification consistently describes the integral knit tongue as being "formed of unitary knit construction with the upper." *See, e.g.*, '636 Patent at 2:34-3:4; 6:35-38; 7:4-26; 7:58-8:26; 9:41-67. While the

"claim language does not expressly recite [the term], that is what [it] mean[s], and that is all that the specification describes." *Ormco Corp. v. Align Tech., Inc.*, 498 F.3d 1307, 1316 (Fed. Cir. 2007). "[T]o attribute to the claims a meaning broader than any indicated in the patents and their prosecution history would be to ignore the totality of the facts of the case and exalt slogans over real meaning." *Id.* Tellingly, Nike offers no explanation of how the '636 Patent's integral knit tongue could possibly be "formed with the upper" other than as a "one-piece element" through unitary knit construction.

Finally, as explained above, the alleged "contradict[ion]" Nike points to with respect to the throat area is nothing more than a result of Nike's misapprehension of the term and of Skechers' construction.

6. <u>"portion of the knitted component defining an upper" and variants thereof (Sections II.D.7-10 of Nike's Opening Brief)</u>

Skechers incorporates by reference its arguments from the preceding section, which largely relate to this section as well. Additional arguments relating to this claim term and variants thereof are set forth below.

First, Nike asserts that these terms are "not … technical phrase[s] that require[] further clarification." D.I. 55 at 13. Nike further claims—incorrectly—that Skechers "concedes that the meaning of the words 'knitting,' 'portion,' 'define,' and 'upper' are all readily ascertainable by using these words in its proposed construction." *Id.*; *see also id.* at 14-16 (similar). Nike cites no authority to support its argument that the use of words appearing in a claim constitutes any form of concession that no construction is required. *See Largan Precision*, 2014 WL 5358426, at *8 (construing "curvature radius of the … surface of the … lens element" as "The ***radius*** of the circle tangent to the ***surface of the lens element*** on the concave side at the point where the ***surface of the lens element*** intersects the optical axis and having the same ***curvature*** at the point of tangency as does the ***surface of the lens element***.").

Skechers EX1010
Skechers v Nike

Second, Nike complains that Skechers' construction "replaces 'knitted component' with 'knitted element,'" allegedly because the phrase "knitted element" does not appear in the patent specification. D.I. 55 at 13. A quick search reveals that the phrase "knit element(s)" appears over sixty times in the patent specification. Moreover, the patent specification uses the term "one-piece element [formed] through a knitting process" as part of the express definition of "unitary knit construction" (the subject of the preceding section of this brief). '562 Patent at 7:65-67. This same quotation (but with different phrases emphasized) appears in the immediately preceding section:

> As used herein and in the claims, a knitted component … is defined as being formed of "unitary knit construction" when formed as ***a one-piece element through a knitting process***…. A unitary knit construction may be used to form a knitted component having structures or elements (including upper 502 and integral knit tongue 512) that include one or more courses of yarn or other knit material that are joined such that the structures or elements include at least one course in common (i.e., sharing a common yarn) and/or include courses that are substantially continuous between each of the structures or elements. With this arrangement, ***a one-piece element of unitary knit construction*** is provided.

'562 Patent at 7:62-8:12. This and other passages, *see, e.g.*, '562 Patent at 2:25-26 ("The upper and the integral knit tongue are formed as ***a one-piece knit element***."), form the basis for Skechers' construction.

Third, Nike suggests that the addition of the words "when further knit" in Skechers' construction imposes a temporal requirement on the claim language. D.I. 55 at 13-14. It does not; it merely clarifies that a complete upper comprises the claimed "portion" plus an integral knit tongue because both need to be knit together for there to be a "unitary knit construction" or for the tongue to be "integral." Indeed, the specification clearly describes how the knitted component (with both structures) defines an upper in its entirety. *See* '562 Patent at 6:54-59.

Fourth, Nike's argument that claims 1 and 13 of the '636 Patent do not use the term "unitary knit construction" ignores the fact that the claims do use "integral knit tongue." D.I. 55 at 16. For the reasons set forth with respect to integral knit tongue, this limitation still requires a "one-piece knitted element." *See also* '562 Patent at 2:25-26 ("The upper and the integral knit tongue are formed as a one-piece knit element.").

Nike's arguments with respect to the "ankle opening" language in Skechers' construction fail for the reasons described above.

C. <u>'781 and '511 Patents – Flat knit textile element with flat knit edges</u>

1. <u>"a flat knit textile element having: (1) flat knit edges free of surrounding textile structure such that the flat knit edges are not surrounded by textile structure from which the textile element must be removed" ('781 and '511 Patents)</u>

Nike quietly omits the first part of the claim term at issue when it argues that "the phrase 'flat knit edges free of surrounding textile structure such that the flat knit edges are not surrounded by textile structure from which the textile element must be removed' does not on its face require the textile element have 'only' flat knit edges." D.I. 55 at 9. The actual claim term at issue is "***a flat knit textile element having: (1)*** flat knit edges free of surrounding textile structure such that the flat knit edges are not surrounded by textile structure from which the textile element must be removed." The PTAB construed this very term to describe a "knit to shape textile element formed by flat knitting, having flat knit edges," Ex. J at 22-23, and Nike did not dispute that construction on appeal. *See Nike, Inc. v. Adidas AG*, 812 F.3d 1326 (Fed. Cir. 2016).

In fact, on appeal, Nike explained to the Federal Circuit that "'knit to shape[]' mean[s] that the textile element is knit into its final form in the first instance" and "the edges of the textile are 'flat knit edges,'" whereas "if a textile element is cut from a larger web of material, its edges must be treated (such as by further stitching or searing) in order to prevent fraying and unraveling." Ex. K at 6-7. Nike also stated

that "a requirement for a 'flat knit' textile element having 'flat knit edges'" is "that the upper is not removed from a larger textile material but is knit to shape in the first instance." *Id.* at 14. Accordingly, as the PTAB found, and as Nike conceded, the claim term at issue, which on its face refers to "a flat knit textile element having [] flat knit edges," does indeed require the textile element to have only flat knit edges.

During prosecution of the '781 Patent, Nike "stated that the phrase 'flat knit edges' does require structure and is not merely a statement of how the textile element is made" (e.g., by flat knitting). Ex. 7 to Gershoni Decl. at NIKE-SKX_0507570. The examiner agreed with Nike and confirmed: "'Flat knit edges' have a finished edge that would be present in a finished article and therefore the phrase has been treated as requiring such." *Id.* Thus, the examiner agreed that ***every*** flat-knit edge is a "finished edge."

Nike argues that the examiner's statement "defined" the phrase "'flat knit edges' … to 'have ***a finished edge*** that would be present in a finished article'—not 'only' finished edges." D.I. 55 at 10. Nike cites no authority for the proposition that patent examiners can unilaterally engage in lexicography to define claim terms on behalf of applicants. But even assuming they could, the examiner's statement here simply does not define "flat knit edges" such that a textile element having a single finished edge qualifies as a flat-knit textile element having "flat knit edges" plural.

And even if the examiner's statement could be understood to so define "flat knit edges," the proper construction of the larger claim term at issue here would not change. In fact, such a definition would further support Skechers' construction because it would not make sense to characterize the multiple edges of a flat knit textile element together as "a finished edge" if each of the multiple edges is not also a finished edge.

2. <u>The ribs "extending … toward the heel region" ('781 Patent)</u>

Nike contends that "the full-scope of the phrase 'extending … toward the heel region' as used in the '781 patent does not exclude 'extending in a diagonal or vertical orientation,'" and that "the full-scope of the phrase … does not require the presence of an 'ankle opening'" because the claims "do not mention the phrase 'ankle opening' or word 'ankle' once." D.I. 55 at 12-13. Nike also argues that such an interpretation "would read out Figure 10 … , which depicts ribs that would extend in a diagonal orientation when the heel edges are secured to each other." *Id*.

Nike is wrong on both fronts. ***First***, during prosecution, Nike expressly distinguished the '781 Patent's scope from prior-art ribs that were described by the applicants as extending "***in a diagonal or vertical orientatio*n** up towards the ***ankle opening***." *See* D.I. 56 at 21–22 (quoting Ex. M at 8). Skechers' construction reflects this express disclaimer. *See CCS Fitness, Inc. v. Brunswick Corp.*, 288 F.3d 1359, 1367 (Fed. Cir. 2002) ("[A] claim term will not carry its ordinary meaning if … the patentee distinguished that term from prior art [or] expressly disclaimed subject matter …"). *See also Omega Eng'g, Inc. v. Raytek Corp.*, 334 F.3d 1314, 1324 (Fed. Cir. 2003) (explaining that when a patentee "disavow[s] a certain meaning to obtain his patent, … prosecution disclaimer attaches and narrows the ordinary meaning of the claim congruent with the scope of the surrender," even when what was surrendered was "expressly disclosed in the written description"); *Zipshade Indus. (B.V.I.) Corp. v. Lowes Home Ctrs., LLC*, No. 2:14-cv-05934, 2017 WL 2766163, at *12 (C.D. Cal. June 26, 2017) ("[P]ublished case law makes clear that a disclaimer/disavowal can occur from a simple statement differentiating the patent in question from prior art[.]").

Second, Skechers' construction does not read out Figure 10. Nike's brief fails to show how an upper assembled from the flat knitted component depicted in Figure 10 would look. As the specification explains (with reference to earlier figures), the

claimed "upper" has a "[heel] seam 52 [(in yellow on left)] [that] is formed by securing an edge 42a with an edge 42b [(both in yellow on right)]." '781 Patent at 6:19-20.

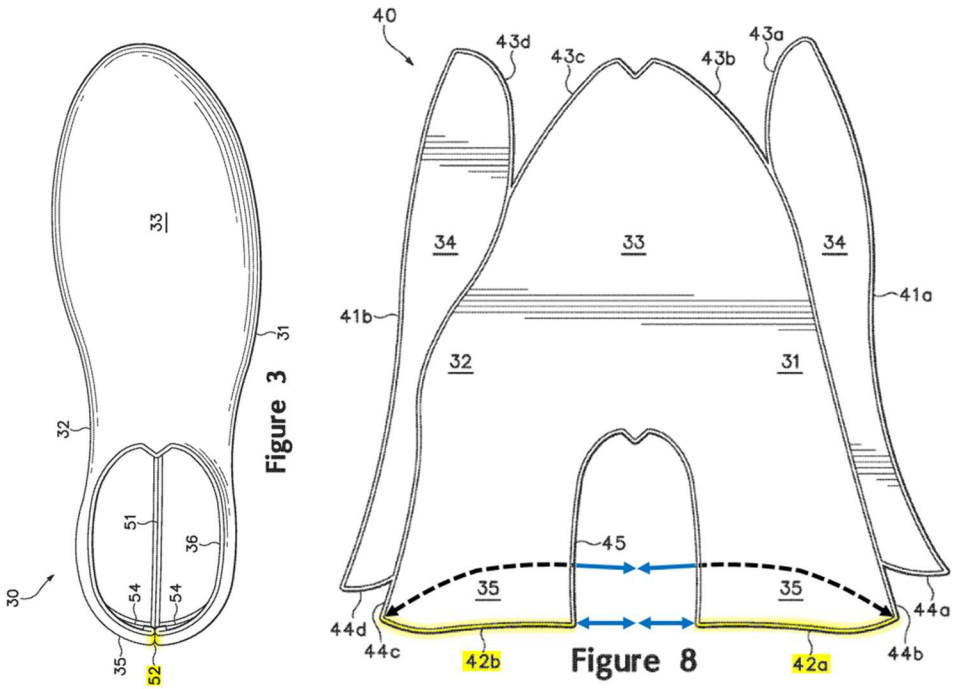

'781 Patent, FIGs. 3, 8 (annotations added). Thus, in the claimed upper (assembled from the flat knit component), the parallel ribs depicted below in Figure 10 extend toward the heel seam at the very back of the shoe, not the ankle opening. Indeed the region of the upper surrounding the ankle opening has no ribs whatsoever.

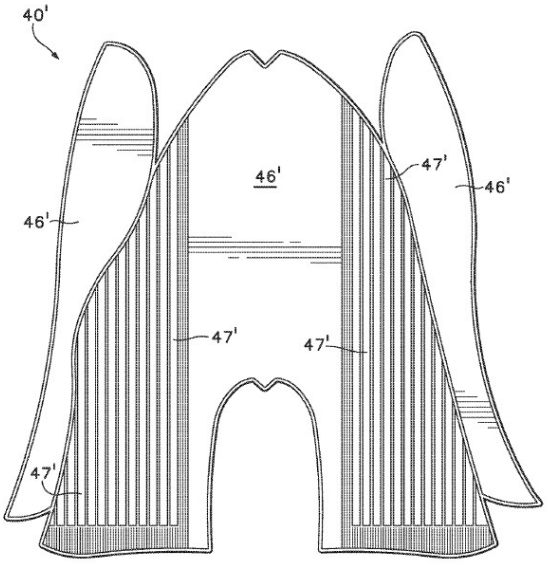

Figure 10

D. <u>All Patents – "article of footwear"</u>

As set forth in Skechers' opening brief, both the intrinsic and extrinsic evidence demonstrate why a person of ordinary skill in the art would understand the term "an article of footwear" in line with Skechers' proposed construction, which comes almost verbatim from the definition set forth in *The Complete Footwear Dictionary*. *See* Ex. N at 4. The only minor difference between that definition and Skechers' proposed construction is Skechers' proposed addition of "(e.g. socks)" to help the jury understand that "hose" includes socks, as the same dictionary recognizes elsewhere. *Id.* at 5-6.

In its opening brief, Nike argues that "article of footwear" is "not a technical phrase that requires further clarification." D.I. 55 at 6. Yet its position is negated by its own clarification—however incorrect—that an article of footwear does ***not*** include socks. For this reason alone, a dispute exists, and construction is required. *O2 Micro*, 521 F.3d at 1362.

Nike additionally argues that "article of footwear" cannot include socks because several claims and portions of the specification state that the article of footwear contains an upper and a sole structure. D.I. 55 at 6-7. However, that ***some*** articles of footwear include uppers and soles does not mean that ***all*** articles of footwear must do so (and Nike has not argued that it has acted as its own lexicographer here).

Finally, Nike contends that the specifications of the two patents "expressly distinguish between 'footwear' and 'socks'" by including socks in a list of "other types of apparel." *Id.* at 7. But socks can be ***both*** footwear ***and*** apparel. The intrinsic evidence indicates that footwear includes socks. For instance, U.S. Patent No. 2,675,631, which was cited during prosecution of all asserted patents and therefore constitutes intrinsic evidence, recites that "the invention is generally applicable to knitted ***footwear of all types, e.g.*** hose, golf hose, three-quarter hose, half-hose and

socks." Ex. 3 at 4:55-58. In addition, Patent Publication EP 2,805,638, which was cited during the prosecution of the '484 Patent, recites that "[t]he present invention relates to a ***footwear such as socks***, shoes, and the like knitted seamlessly with a flat knitting machine, and a knitting method for a knit fabric of producing the footwear" and that "***[t]he footwear of the present invention includes socks, tabi (mitten socks)***, shoes or the upper of the shoes, and the like." Ex. 4 at [0001], [0007]. Moreover, U.S. Patent No. 2,904,980, which was also cited during prosecution of the '484 Patent and constitutes intrinsic evidence, recites that "[t]his invention relates to knitted articles of footwear and particularly to socks which are intended for sport, informal and house wear." Ex. 5 at 1:15-17. Finally, in its remand decision in IPR2016-00922, where Adidas challenged the validity of the '749 Patent, the PTAB held that U.S. Patent No. 3,985,003 to Reed "specifically ***identifies stockings and hosiery*** (*id*. at 1:33-35, 5:57-58), ***e.g., footwear***, as garments manufactured by circular knitting." Ex. 6 at 28. All of this intrinsic evidence further confirms Skechers' construction, *i.e.*, that an "article of footwear" includes socks.

Dated: June 7, 2024

IRELL & MANELLA LLP

By: */s/ Connor R. He-Schaefer*
Connor R. He-Schaefer

Morgan Chu (70446)
mchu@irell.com
Samuel K. Lu (171969)
slu@irell.com
Keith A. Orso (217490)
korso@irell.com
Thomas C. Werner (223792)
twerner@irell.com
Connor R. He-Schaefer (341545)
che-schaefer@irell.com
IRELL & MANELLA LLP
1800 Avenue of the Stars, Suite 900
Los Angeles, California 90067-4276

Skechers EX1010
Skechers v Nike

Telephone: (310) 277-1010
Facsimile: (310) 203-7199

Jonathan M. Lindsay (208840)
jlindsay@irell.com
Jie Gao (348941)
jgao@irell.com
IRELL & MANELLA LLP
840 Newport Center Drive, Suite 400
Newport Beach, CA 92660
Telephone: (949) 760-0991
Facsimile: (949) 760-5200

Michael M. Rosen (230964)
mrosen@irell.com
IRELL & MANELLA LLP
750 17th Street NW
Suite 850
Washington, DC 20006
Telephone: (202) 777-6500

Attorneys for Defendant
And Counterclaim-Plaintiff
Skechers U.S.A., Inc.

Skechers EX1010
Skechers v Nike