May 5, 1931. H. M. KNILANS 1,803,554

ATHLETIC SHOE

Filed March 26, 1930

Fig. 1.

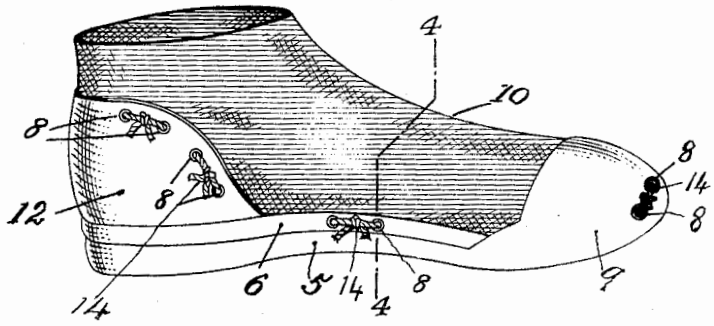

Fig. 2.

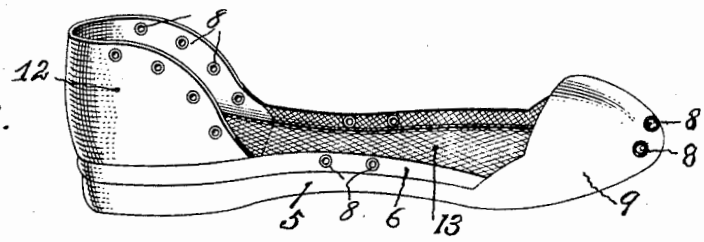

Fig. 4.

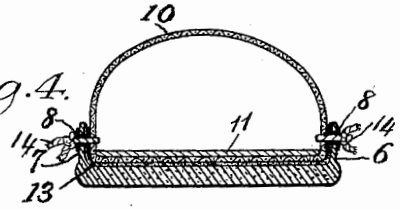

Fig. 3.

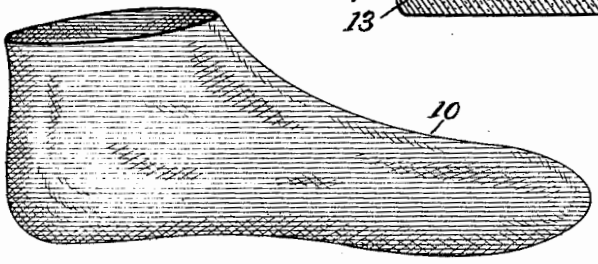

Inventor,
Harold M. Knilans,
by Thurs Adkleman
Attorney.

Patented May 5, 1931 1,803,554

UNITED STATES PATENT OFFICE

HAROLD M. KNILANS, OF SHREVEPORT, LOUISIANA

ATHLETIC SHOE

Application filed March 26, 1930. Serial No. 439,102.

This invention relates to shoes, and particularly to sport shoes of the type used in playing games, such as basketball, although, of course, its utility may extend to other functions.

It is an object of this invention to provide a shoe having an elastic upper which may be readily applied to or removed from a sole and counter, the said sole also including a portion arching the toe of the upper.

It is a further object of this invention to produce a shoe which is laceless, although it will remain in place during its use owing to elasticity of the upper which is intended to closely fit the foot and retain the shoe in place. However, the shoe may be expeditiously removed and this is a great advantage where quick changes have to be resorted to, as is the case where a player receives an injury which requires the attention of a coach or the like, as a trainer may tape an ankle or instep during intermission and have the player ready to continue play at the next period.

Other advantages may be attributed to the invention, in that it is comparatively inexpensive, as well as efficient and satisfactory in use.

With the foregoing and other objects in view, the invention consists in the details of construction, and in the arrangement and combination of parts to be hereinafter more fully set forth and claimed.

In describing the invention in detail, reference will be had to the accompanying drawings forming part of this application, wherein like characters denote corresponding parts in the several views, and in which—

Figure 1 illustrates a perspective view of a shoe embodying the invention;

Figure 2 illustrates a perspective view of the sole portion with the counter applied thereto;

Figure 3 illustrates a perspective view of the upper or elastic knit sock to be assembled with the sole and counter; and

Figure 4 illustrates a sectional view of the shoe on the line 4—4 of Fig. 1.

The present embodiment of the invention, as illustrated, comprises a sole portion 5 with side flanges 6 and 7, each of which flanges has eyelets, such as 8. The sole is formed with a toe portion 9 which receives the toe of the sock-like upper 10, which upper is preferably formed of elastic knit material capable of snugly fitting the user.

An insole 11 is preferably applied to the interior of the sock or upper and this will prevent friction when running or stopping or starting.

A counter 12 is seated within the flanges and it may be secured to the inner surface of the sole and flanges in any appropriate way. Preferably the inner part of the sole and flanges are faced with canvas, as illustrated at 13, a condition which results in reinforcing and strengthening the structure.

The upper or sock portion is secured in place by flexible members or ties 14 which extend through the material of the sole portion and the upper or sock and they are knotted to insure the retention of the parts assembled, as illustrated.

It is intended that the portion 9 of the toe shall be sufficiently rigid and strong so as to prevent dislodgment of the toe of the user from the toe cap, and the strength of this cap will be determined by the strain incident to its use.

The toe portion 9 also has eyelets 8 and coinciding apertures respectively for the reception of a tie such as 14.

I claim:

1. In a shoe of the character described, a sole having side flanges and a toe cap, the said flanges having apertures, a counter secured to the sole at the rear thereof, and an elastic sock-like upper attached to said flanges and counter, the said toe portion of said upper being inserted under the toe cap.

2. In a shoe of the character described, a sole having side flanges and a toe cap, a counter secured to the sole at its rear end, the said flanges and counter having apertures, an elastic sock-like upper applied to said sole, toe cap and counter, fastenings extending thorugh the flanges and upper, and fastenings extending through the counter and upper for securing the parts assembled.

3. In a shoe of the character described, a

sole having side flanges and a toe cap, a counter secured to the sole at its rear end, the said flanges and counter having apertures, an elastic sock-like upper applied to said sole, toe cap and counter, fastenings extending through the flanges and upper, fastenings extending through the counter and upper for securing the parts assembled, and an insole applied to the interior of the upper.

HAROLD M. KNILANS.