US010165879B2

(12) **United States Patent**
Davies et al.

(10) **Patent No.: US 10,165,879 B2**
(45) **Date of Patent: *Jan. 1, 2019**

(54) **DRINK CONTAINERS**

(71) Applicant: **CamelBak Products, LLC**, Petaluma, CA (US)

(72) Inventors: **Jeff Davies**, Windsor, CA (US); **Derek Gavin Sullivan**, Austin, TX (US)

(73) Assignee: **CamelBak Products, LLC**, Petaluma, CA (US)

(*) Notice: Subject to any disclaimer, the term of this patent is extended or adjusted under 35 U.S.C. 154(b) by 0 days.

This patent is subject to a terminal disclaimer.

(21) Appl. No.: **15/817,013**

(22) Filed: **Nov. 17, 2017**

(65) **Prior Publication Data**

US 2018/0070751 A1 Mar. 15, 2018

Related U.S. Application Data

(63) Continuation of application No. 15/398,569, filed on Jan. 4, 2017, now Pat. No. 9,820,595, which is a

(Continued)

(51) **Int. Cl.**
A47G 19/22 (2006.01)
A47G 21/18 (2006.01)

(Continued)

(52) **U.S. Cl.**
CPC ***A47G 19/2272*** (2013.01); ***A47G 19/2266*** (2013.01); ***A47G 21/18*** (2013.01);

(Continued)

(58) **Field of Classification Search**
CPC A47G 19/2266; A47G 19/2272; A47G 21/18; B65D 51/242; B65D 47/065; B65D 47/2031

(Continued)

(56) **References Cited**

U.S. PATENT DOCUMENTS

2,936,934 A 5/1960 Kubiliunas
3,181,743 A 5/1965 Libit et al.

(Continued)

FOREIGN PATENT DOCUMENTS

EP 0266067 A1 5/1988
EP 1095599 A2 5/2001

(Continued)

OTHER PUBLICATIONS

Description and photographs of Thermos® Foogo™ Straw Bottle purchased Dec. 2008.

(Continued)

Primary Examiner — Robert Poon
(74) *Attorney, Agent, or Firm* — Dascenzo Intellectual Property Law, P.C.; David S. D'Ascenzo

(57) **ABSTRACT**

Drink containers with mouthpiece assemblies having a dispensing configuration and a stowed configuration. A mouthpiece assembly defines a liquid passage through which drink liquid may be dispensed when the mouthpiece assembly is in the dispensing configuration and includes means for selectively restricting the flow of drink liquid through the liquid passage when the mouthpiece assembly is in the stowed configuration. In some examples, the means for selectively restricting the flow of drink liquid include a tube that at least partially defines the liquid passage and which includes a crimping region. The crimping region may be constructed of a resiliently and reversibly deformable material that is adapted to restrict the flow of drink liquid through the liquid passage when the mouthpiece assembly is in the stowed configuration. In some embodiments, the mouthpiece assembly includes a means for automatically releasing the mouthpiece assembly from its stowed configuration to a dispensing configuration.

20 Claims, 4 Drawing Sheets

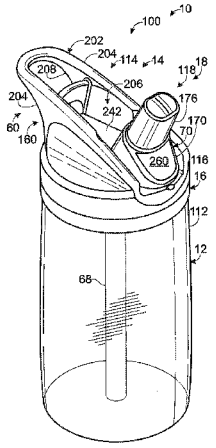

Related U.S. Application Data

continuation of application No. 13/479,962, filed on May 24, 2012, now Pat. No. 9,782,028, which is a continuation of application No. 12/357,114, filed on Jan. 21, 2009, now Pat. No. 8,191,727.

(51) **Int. Cl.**
B65D 47/06 (2006.01)
B65D 47/20 (2006.01)
B65D 51/24 (2006.01)

(52) **U.S. Cl.**
CPC ***B65D 47/065*** (2013.01); ***B65D 47/2031*** (2013.01); ***B65D 51/242*** (2013.01)

(58) **Field of Classification Search**
USPC 220/252, 705, 707–709; 215/387–389
See application file for complete search history.

(56) **References Cited**

U.S. PATENT DOCUMENTS

3,283,967	A	11/1966	Akers	
3,294,293	A	12/1966	Johns	
3,907,179	A	9/1975	Pehr et al.	
4,485,963	A	12/1984	Panicci	
4,860,934	A	8/1989	Komischke	
5,065,909	A	11/1991	Pino et al.	
5,203,468	A	4/1993	Hsu	
5,242,079	A	9/1993	Stephens et al.	
5,273,172	A	12/1993	Rossbach et al.	
5,332,131	A	7/1994	Pehr	
5,337,918	A	8/1994	Wang	
5,392,968	A	2/1995	Dark	
5,465,866	A	11/1995	Belcastro	
5,518,142	A	5/1996	Lin	
5,520,304	A	5/1996	Lin	
5,582,320	A	12/1996	Lin	
5,873,478	A	2/1999	Sullivan et al.	
5,884,793	A	3/1999	Wang	
5,897,013	A	4/1999	Manganiello	
6,050,445	A	4/2000	Manganiello	
6,059,154	A	5/2000	Bigotte et al.	
6,070,767	A	6/2000	Gardner et al.	
6,116,458	A	9/2000	Dark	
6,276,560	B1	8/2001	Belcastro	
6,279,773	B1	8/2001	Kiyota	
6,390,341	B1	5/2002	Ohmi et al.	
6,422,415	B1	7/2002	Manganiello	
6,607,092	B2	8/2003	Manganiello et al.	
6,609,624	B2	8/2003	Goto et al.	
6,675,998	B2	1/2004	Forsman et al.	
6,745,949	B2	6/2004	Lee	
6,915,961	B2	7/2005	Renz et al.	
7,059,490	B2	6/2006	Son	
7,147,126	B2	12/2006	Samson et al.	
7,201,284	B2	4/2007	Clark et al.	
D547,606	S	7/2007	Forsman	
D547,607	S	7/2007	Forsman	
7,255,241	B2	8/2007	Yoneoka et al.	
7,533,783	B2	5/2009	Choi et al.	
9,820,595	B2 *	11/2017	Davies	A47G 19/2272
2002/0040909	A1 *	4/2002	Goto	A47G 19/2266 220/709
2003/0085232	A1	5/2003	Leinenweber	
2003/0102318	A1	6/2003	Lee	
2003/0218015	A1	11/2003	Randolph et al.	
2004/0069783	A1 *	4/2004	Chen	A47G 19/2266 220/254.3
2004/0159820	A1	8/2004	Yang	
2005/0029271	A1	2/2005	McDonough	
2005/0056610	A1	3/2005	Randolph et al.	
2005/0056652	A1	3/2005	Cezeaux	
2005/0133519	A1	6/2005	McDonough	
2005/0205587	A1	9/2005	Sampson et al.	
2005/0218242	A1	10/2005	Renz et al.	
2006/0226110	A1	10/2006	Choi et al.	
2007/0039959	A1	2/2007	Choi et al.	
2008/0237233	A1	10/2008	Choi et al.	
2010/0170902	A1	7/2010	Britto et al.	
2010/0181329	A1	7/2010	Davies et al.	
2010/0193462	A1 *	8/2010	Roth	A47G 19/2288 215/229

FOREIGN PATENT DOCUMENTS

GB	2279130	A	12/1994
JP	2002-326655	A	11/2002
WO	WO 98/46106		10/1998
WO	WO 00/49922		8/2000

OTHER PUBLICATIONS

English-language abstract of Japanese Patent No. 2002-326655A, European Patent Office, Nov. 12, 2002.

* cited by examiner

Fig. 1

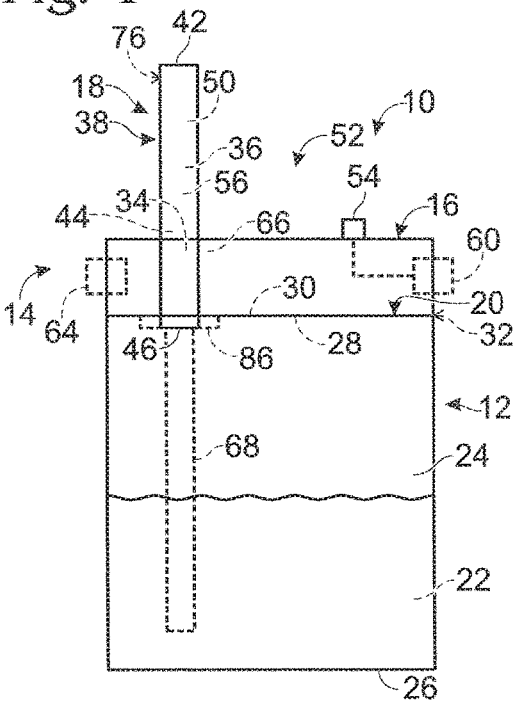

Fig. 2

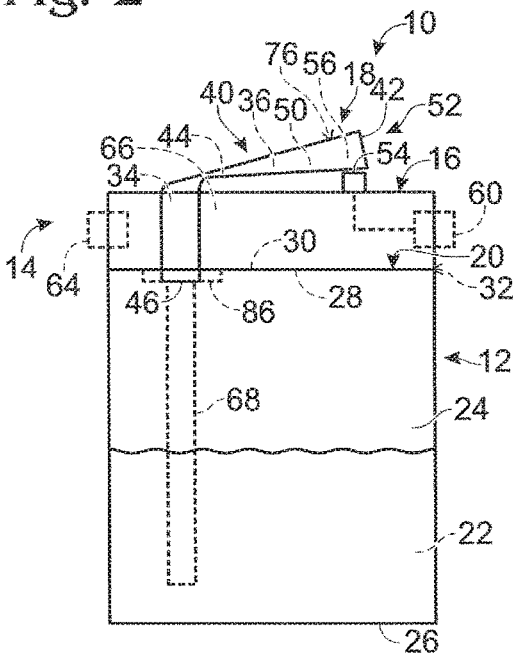

Fig. 3

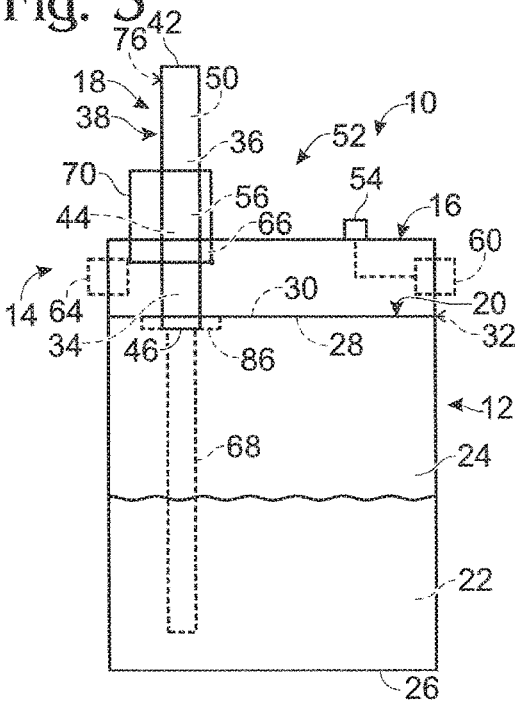

Fig. 4

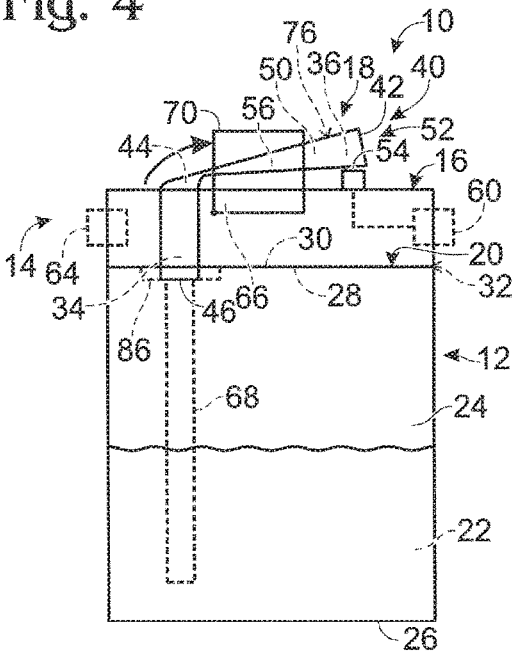

Fig. 5

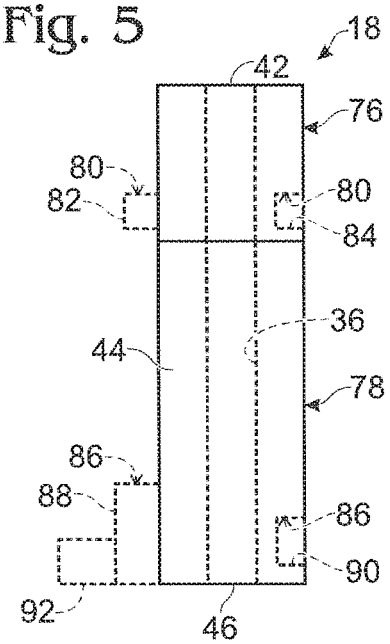

Fig. 7

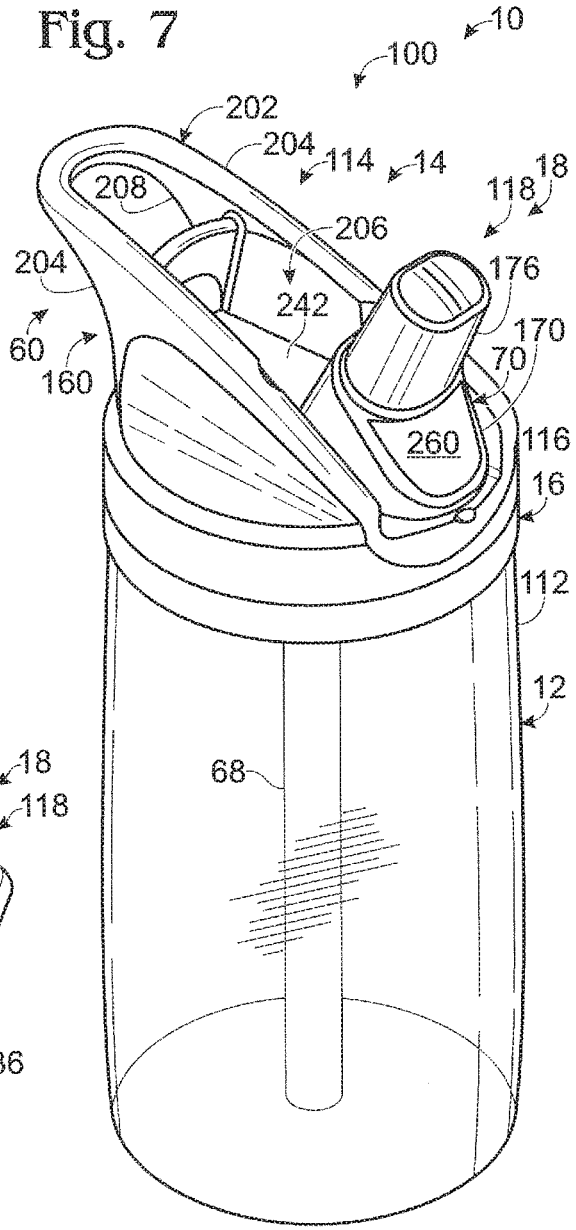

Fig. 6

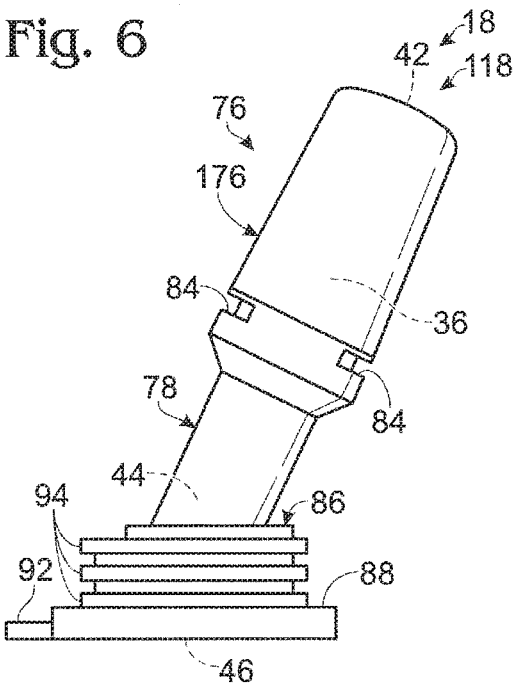

Fig. 8

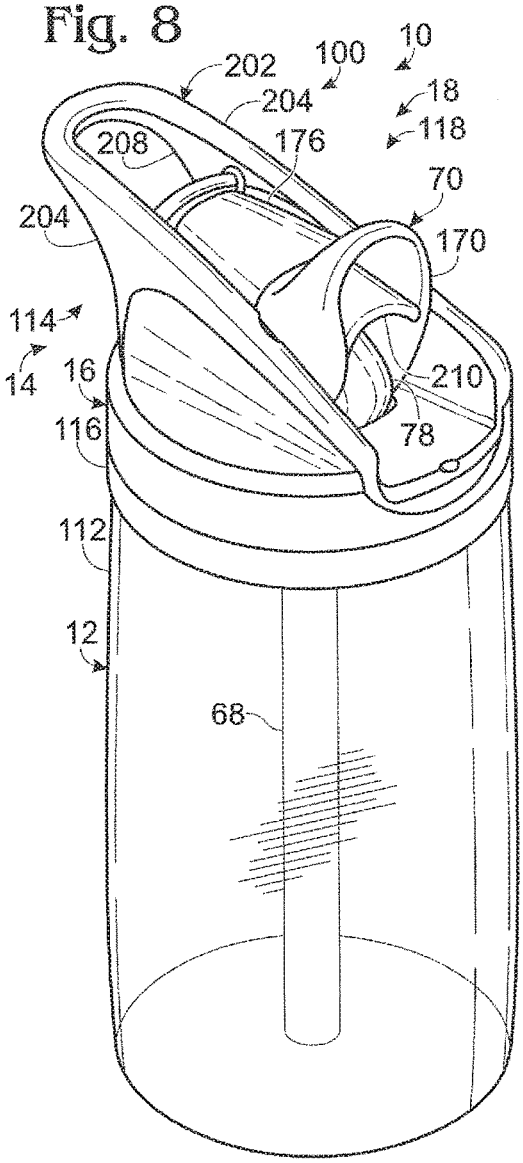

Fig. 9

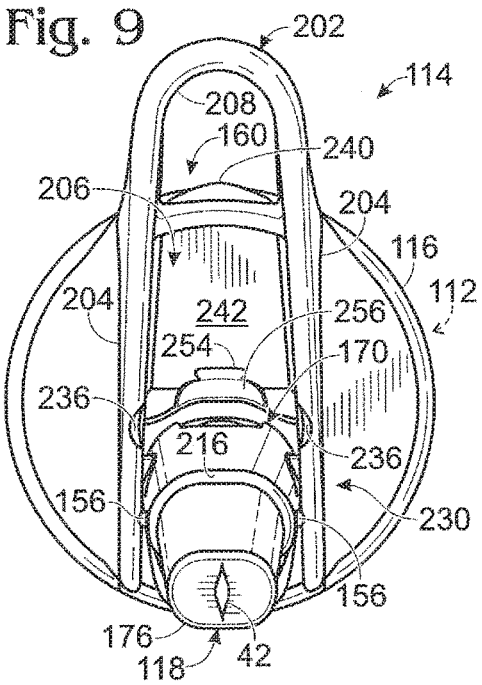

Fig. 10

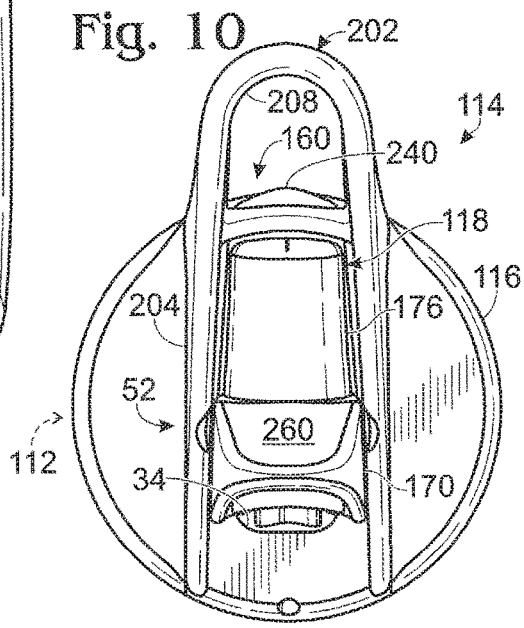

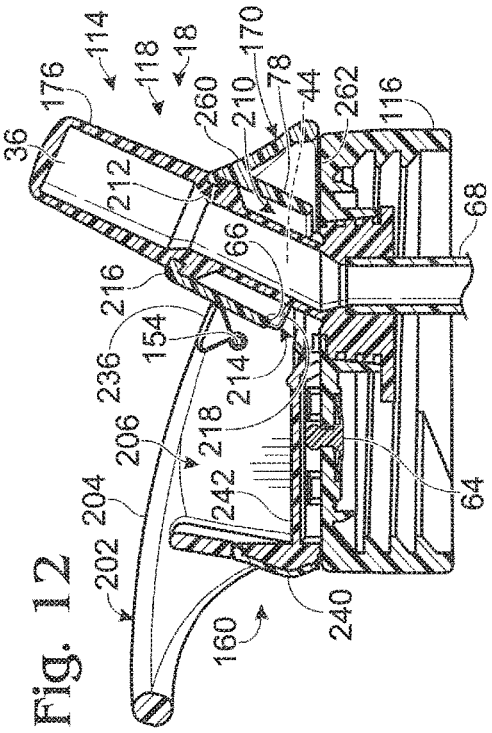

Fig. 12

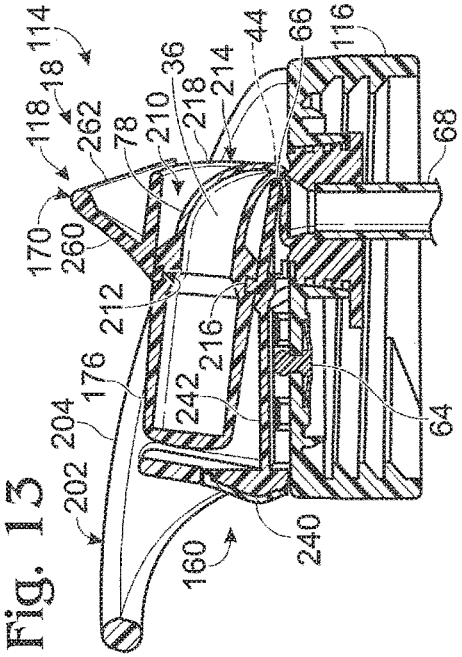

Fig. 13

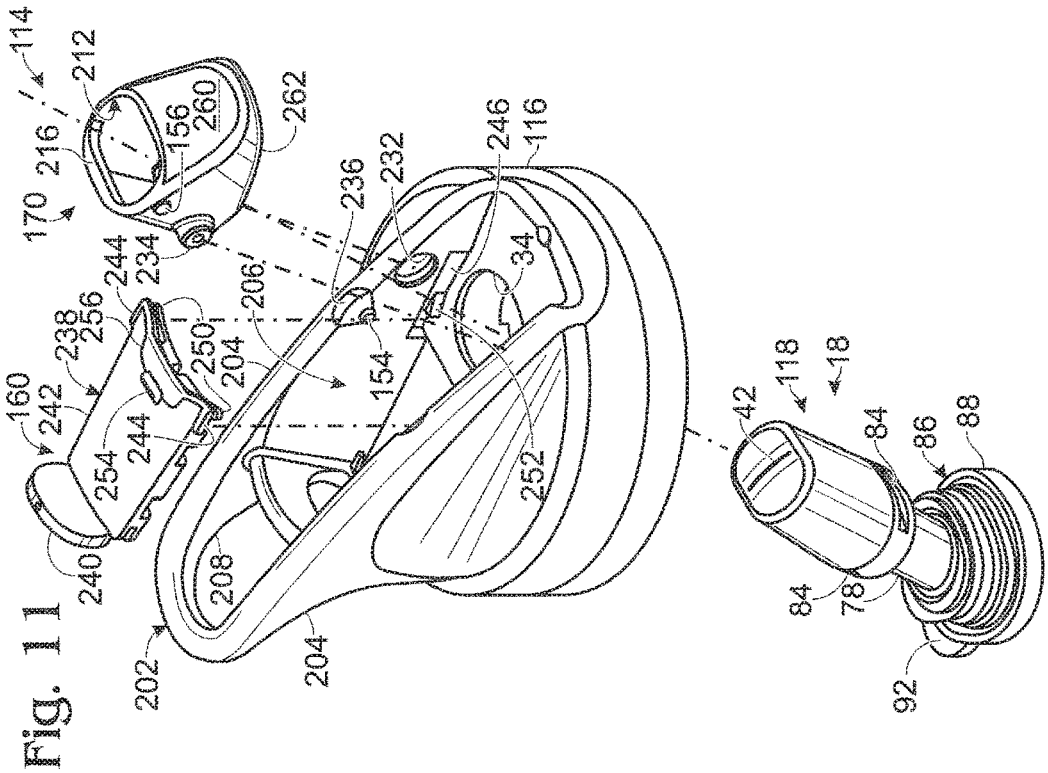

Fig. 11

DRINK CONTAINERS

RELATED APPLICATIONS

The present application is a continuation patent application that claims priority under 35 U.S.C. § 120 to U.S. patent application Ser. No. 15/398,569, which is entitled "Drink Containers," was filed on Jan. 4, 2017, issued on Nov. 21, 2017 as U.S. Pat. No. 9,820,595, and which claims priority to U.S. patent application Ser. No. 13/479,962, which is entitled "Drink Containers," was filed on May 24, 2012, issued on Oct. 10, 2017 as U.S. Pat. No. 9,782,028, and which claims priority to U.S. patent application Ser. No. 12/357,114, which is entitled "Drink Containers," was filed on Jan. 21, 2009, and issued on Jun. 5, 2012 as U.S. Pat. No. 8,191,727. The complete disclosures of the above-identified patents are incorporated herein by reference.

FIELD OF THE DISCLOSURE

The present disclosure relates generally to drink containers, and more particularly to drink containers with mouthpiece assemblies that have a dispensing configuration and a stowed configuration.

BACKGROUND OF THE DISCLOSURE

For some time, people have recognized the need to stay hydrated. Conventionally, many individuals carry drink bottles that contain water or other potable beverages. These bottles are typically formed from plastic or metal and include a cap. Some conventional drink bottles include a threaded or other neck from which a user drinks liquid contained in the drink bottle after removal of the cap. Some conventional drink bottles include a spout, or nozzle, from which the drink liquid may be drawn from the drink bottle without removing the cap of the drink bottle. Conventional spouts typically include a flexible straw or a rigid spout having an outlet through which drink liquid may flow.

SUMMARY OF THE DISCLOSURE

Drink containers according to the present disclosure include a liquid container and a cap assembly with a mouthpiece assembly that is adapted to be selectively configured between a dispensing configuration, in which drink liquid may be selectively dispensed from the liquid container, and a stowed configuration, in which drink liquid is restricted from being dispensed from the liquid container. In some examples, the mouthpiece assembly includes a tube portion, at least a portion of which defines a crimping region that is constructed of a resiliently deformable material and that is adapted to restrict the flow of drink liquid therethrough when the mouthpiece assembly is in the stowed configuration. Some examples of drink containers according to the present disclosure further include a user-release mechanism that is adapted to automatically, upon user actuation, release the mouthpiece assembly from the stowed configuration to the dispensing configuration. In some examples, the mouthpiece assembly is biased toward the dispensing configuration and thus moves automatically under its bias upon release by the user-release mechanism. In some examples, the mouthpiece assembly includes a user-actuated mouthpiece, such as a bite-actuated mouthpiece, having an open position and a closed position. Such a mouthpiece may enable a user to selectively receive drink liquid from the liquid container via the mouthpiece assembly when the mouthpiece assembly is in the dispensing configuration and the user-actuated mouthpiece is in the open position.

BRIEF DESCRIPTION OF THE DRAWINGS

FIG. **1** is a schematic illustration of a drink container according to the present disclosure with the drink container's mouthpiece assembly illustrated in a dispensing configuration.

FIG. **2** is a schematic illustration of the drink container of FIG. **1** with the mouthpiece assembly illustrated in a stowed configuration.

FIG. **3** is another schematic illustration of a drink container according to the present disclosure with the drink container's mouthpiece assembly illustrated in a dispensing configuration.

FIG. **4** is a schematic illustration of the drink container of FIG. **3** with the mouthpiece assembly illustrated in a stowed configuration.

FIG. **5** is a schematic illustration of at least a portion of a mouthpiece assembly according to the present disclosure.

FIG. **6** is a side view of an illustrative, non-exclusive example of at least a portion of a mouthpiece assembly according to the present disclosure.

FIG. **7** is an isometric view of an illustrative, non-exclusive example of a drink container according to the present disclosure including the mouthpiece assembly of FIG. **6**, with the drink container illustrated with the mouthpiece assembly in its dispensing configuration.

FIG. **8** is an isometric view of the drink container of FIG. **7** with its mouthpiece assembly in its stowed configuration.

FIG. **9** is a top view of the cap assembly of the drink container of FIG. **7** with the cap assembly's mouthpiece assembly in its dispensing configuration.

FIG. **10** is a top view of the cap assembly of FIG. **9** with the mouthpiece assembly in its stowed configuration.

FIG. **11** is an isometric exploded view of the cap assembly of FIG. **9**.

FIG. **12** is a cross-sectional side elevation view of the cap assembly of FIG. **9** with the mouthpiece assembly in its dispensing configuration.

FIG. **13** is a cross-sectional side elevation view of the cap assembly of FIG. **9** with the mouthpiece assembly in its stowed configuration.

DETAILED DESCRIPTION AND BEST MODE OF THE DISCLOSURE

Drink containers according to the present disclosure are schematically illustrated in FIGS. **1-4** and are indicated generally at **10**. Drink containers **10** according to the present disclosure are designed to receive and selectively dispense to a user a volume of potable drink liquid. Illustrative, non-exclusive examples of drink liquids that may be used in drink containers **10** according to the present disclosure include such potable liquids as water, juice, sports drinks, milk, soft drinks, and the like. Drink containers **10** include a liquid container **12** and a cap assembly **14** having a unique mouthpiece assembly.

Liquid containers **12** according to the present disclosure are adapted to receive and hold or otherwise contain up to a predetermined volume of drink liquid **22** for selective consumption by a user. Liquid containers **12** may include an open neck **20**, through which drink liquid **22** may be selectively poured, or otherwise dispensed, into an internal compartment **24** of the liquid container, and from which the

drink liquid may be selectively dispensed from the internal compartment to a user. It is within the scope of the present disclosure that neck **20** may (but is not required in all embodiments to) define the only opening through which drink liquid may be added to or removed from the liquid container. As discussed in more detail herein, when cap assembly **14** is operatively coupled to the liquid container, this selective dispensing of the drink liquid may be responsive to whether or not a mouthpiece assembly of the cap assembly has been configured to a dispensing configuration, and in some embodiments, whether a mouthpiece portion of the mouthpiece assembly has been configured to an open configuration. As used herein, "selective" and "selectively," when modifying an action, movement, configuration, or other activity of one or more components or characteristics of a drink container according to the present disclosure, means that the specified action, movement, configuration, or other activity is a direct or indirect result of user manipulation of an aspect of, or one or more components of, the drink container.

Liquid containers **12** may have any suitable shape and be formed from any suitable material or combination of materials to hold up to a predetermined volume of drink liquid. Illustrative, non-exclusive examples of suitable sizes, or capacities, of liquid containers **12** (i.e., volume of drink liquid **22** able to be received into a liquid container at one time) include 4 oz., 6 oz., 8 oz., 10 oz., 12 oz., 16 oz., 20 oz., 24 oz., 32 oz., 36 oz., 4-11 oz., 12-19 oz., 19-25 oz., 12-36 oz., 25-36 oz., and 10-70 oz. (with these illustrative examples referring to liquid (fluid) ounces of drink liquid that may be received at one time into an empty liquid container). It is within the scope of the present disclosure that liquid containers having different sizes, including sizes that are smaller than, larger than, or within the illustrative sizes and/or ranges presented above, may be used without departing from the scope of the present disclosure.

An illustrative, non-exclusive example of a material that may be used to construct liquid containers **12** according to the present disclosure includes the TRITAN™ copolyester polymer developed by Eastman Chemical Company. Other illustrative, non-exclusive examples of materials that may be suitable for construction of liquid containers according to the present disclosure include polycarbonate and metal, such as aluminum. Further illustrative, non-exclusive examples are disclosed in U.S. Patent Application Publication No. 2006/0226110, the entire contents of which are hereby incorporated by reference.

Liquid containers **12** may be (but are not required to be) rigid or at least semi-rigid and may include a bottom surface **26** such that a liquid container may be generally self-supporting, or free-standing. In such embodiments, drink containers **10** may be referred to as drink bottles. In some illustrative, non-exclusive embodiments, a liquid container **12** according to the present disclosure may be constructed of polyethylene or other material that permits the liquid container to be reversibly collapsed during use. Such an illustrative, non-exclusive example may permit opposing portions of the liquid container to be urged toward or even into contact with each other to reduce the volume of the liquid container and thereby aid in the dispensing of drink liquid **22** therefrom. In such an embodiment, the liquid container may be configured to return automatically to its prior configuration upon reduction of the pressure that was applied to urge the sides of the liquid container toward each other.

Cap assemblies **14** according to the present disclosure may be adapted to be removably coupled to a liquid container **12** to cover, or otherwise enclose, the neck **20** thereof. When so coupled to a liquid container, a cap assembly **14** restricts drink liquid within the liquid container's internal compartment **24** from being dispensed from the drink container other than through a liquid passage **36** defined by the cap assembly. When this liquid passage is obstructed or otherwise closed or sealed, the cap assembly prevents drink liquid from being dispensed from the liquid container. Accordingly, any drink liquid in the internal compartment of the liquid container is prevented from being dispensed to a user or otherwise removed from the liquid container until either the cap assembly is uncoupled from the liquid container or until the liquid passage is configured by a user to a configuration in which drink liquid may flow therethrough.

Cap assemblies **14** according to the present disclosure include a base **16** and a mouthpiece assembly **18**. Furthermore, cap assemblies **14** define a liquid passage **36**, through which drink liquid **22** may be selectively drawn, or otherwise dispensed, by a user from the internal compartment of an attached liquid container **12**.

Although not required in all embodiments, cap assembly **14** is typically removably coupled to liquid container **12**, such as to neck **20** thereof, to permit selective and non-destructive removal and replacement (i.e., uncoupling and recoupling) of the cap assembly relative to the liquid container. For example, cap assembly **14** may be uncoupled from the liquid container to permit the liquid container to receive a volume of drink liquid, after which the cap assembly may be recoupled to the liquid container. Accordingly, drink containers **10** according to the present disclosure may include a coupling assembly **32**, with the liquid container **12** including coupling structure **30** and the cap assembly **14** including coupling structure **28**, which is adapted to selectively mate with coupling structure **30**. In such an embodiment, neck **20** of the liquid container may include coupling structure **30**, and base **16** of cap assembly **14** may include coupling structure **28**. Coupling assembly **32** may provide a liquid-tight connection between the cap assembly and the liquid container. When such a connection is established between the cap assembly and the liquid container, the cap assembly may restrict liquid from being dispensed from the drink container other than through a through-passage **34** and/or a liquid passage **36** defined by the cap assembly. Illustrative, non-exclusive examples of coupling assembly **32** that may be incorporated into drink containers according to the present disclosure include (but are not limited to) threads, snap-fit arrangements, friction-fit arrangements, clasp arrangements, etc.

Base **16** further includes a through-passage **34** through which the mouthpiece assembly **18** at least partially, if not completely, extends to enable the mouthpiece assembly to receive drink liquid from the internal compartment **24** of liquid container **12** and selectively permit the drink liquid to flow through the liquid passage defined by the mouthpiece assembly for dispensing to a user.

Mouthpiece assemblies **18** according to the present disclosure define the liquid passage **36**, through which drink liquid from the liquid container may be selectively drawn by a user. Mouthpiece assemblies **18** define an inlet **46**, which is in fluid communication with the internal compartment of the liquid container when the cap assembly is coupled thereto, and an outlet **42**, through which drink liquid from the liquid container may be selectively dispensed through the liquid passage to a user. Mouthpiece assemblies **18** may be selectively configured between a dispensing configuration **38**, in which the mouthpiece assembly permits drink liquid to flow from the internal compartment of the liquid container (such as illustrated in FIGS. **1** and **3**) at least into

the liquid passage of the mouthpiece assembly, and a stowed configuration **40**, in which the mouthpiece assembly restricts the flow of drink liquid through the liquid passage to outlet **42** (such as illustrated in FIGS. **2** and **4**).

When operatively positioned to extend through the through-passage of the base, the mouthpiece assembly may be restricted from being removed therefrom, at least without first uncoupling the cap assembly from the drink container to permit access to the underside of the cap assembly. Mouthpiece assembly **18** may therefore be described as being anchored, or at least selectively anchored, to base **16** and/or to through-passage **34** of base **16**. Additionally or alternatively, mouthpiece assembly **18** may in some embodiments be described as being configured to be non-destructively removed from through-passage **34** from the underside of the cap assembly but not from the top side of the cap assembly. As an illustrative, non-exclusive example, the mouthpiece assembly and the through-passage may have a friction-fit arrangement. As another illustrative, non-exclusive example, the mouthpiece assembly may include an anchor, or anchor portion, **86** that is sized so as not to fit through the through-passage of the base, such as by being too large to fit therethrough. Other configurations are also within the scope of the present disclosure.

As illustrated in FIGS. **1** and **3**, at least a portion of the mouthpiece assembly **18** (such as a mouthpiece portion **76** thereof) may project generally away from the base of the cap assembly when the mouthpiece assembly is in the dispensing configuration **38**, and as illustrated in FIGS. **2** and **4**, at least a portion of the mouthpiece assembly (such as a mouthpiece portion **76** thereof) may extend generally against, adjacent to, or otherwise along the base of the cap assembly when the mouthpiece assembly is in the stowed configuration **40**. In the schematically illustrated examples of FIGS. **1-4**, the mouthpiece assembly, or at least a portion thereof, is adapted to be pivoted by a user between the dispensing and stowed configurations. Other configurations are also within the scope of the present disclosure. For example, in some embodiments, a mouthpiece assembly may be configured to be selectively positioned within a range of dispensing positions.

Mouthpiece assemblies **18** include at least a crimping region **44**, which permits drink liquid to flow through liquid passage **36** when the mouthpiece assembly is in the dispensing configuration, and which prevents, or at least restricts, drink liquid from flowing through liquid passage **36** when the mouthpiece assembly is in the stowed configuration. For example, in some mouthpiece assemblies **18** according to the present disclosure, the crimping region may be constructed of a resiliently deformable material such that when the mouthpiece assembly, or at least a portion thereof, is pivoted, or otherwise folded, the crimping region of the mouthpiece assembly becomes crimped, or folded on itself, such that opposing walls of the crimping region come into contact with each other and effectively, or at least partially, seal the liquid passage within the crimping region of the mouthpiece assembly. When in such a crimped configuration, drink fluid is restricted or even prevented from flowing through the liquid passage from its inlet to its outlet due to the obstruction formed by the crimping region.

Mouthpiece assemblies **18** according to the present disclosure are biased toward the dispensing configuration and therefore may be described as having a biasing mechanism **50**. The bias of a mouthpiece assembly according to the present disclosure may be provided by the internal bias created by the material from which at least a portion of the mouthpiece assembly is constructed. For example, at least a portion of a mouthpiece assembly, such as crimping region **44**, may be constructed of a resiliently deformable material. An illustrative, non-exclusive example of a suitable resiliently deformable material includes (but is not limited to) silicone. Additionally or alternatively, a biasing mechanism **50** may include at least one spring. Other configurations are also within the scope of the present disclosure.

Cap assemblies **14** according to the present disclosure further include a mouthpiece securing mechanism **52** that is adapted to selectively retain the mouthpiece assembly in stowed configuration **40**. Accordingly, a user of a drink container **10** may selectively configure, or move, the mouthpiece assembly from the dispensing configuration into the stowed configuration to prevent, or at least restrict, drink liquid from being dispensed from the drink container, for example, when not using the drink container, when transporting the drink container, or in other situations in which a user may wish to prevent drink liquid from being dispensed. When a user wishes to drink from the drink container and thus dispense drink liquid therefrom, the user may reconfigure the mouthpiece assembly from stowed configuration **40** to dispensing configuration **38**. In some embodiments, the mouthpiece assembly may be biased to its dispensing configuration, such as by including a suitable biasing mechanism or structure. In such an embodiment, the mouthpiece assembly may be configured to move automatically via, or under, its bias to the dispensing configuration upon release from its stowed configuration.

Mouthpiece securing mechanism **52** includes a first catch structure **54** and a second catch structure **56**. First catch structure **54** may be coupled to, integral to, formed as part of, or otherwise disposed on or within the base or other portion of the cap assembly, and second catch structure **56** may be coupled to, integral to, formed as part of, or otherwise disposed on or within the mouthpiece assembly. Accordingly, first and second catch structures **54**, **56** may be adapted to be selectively engaged, or mated, with each other to retain the mouthpiece assembly in the stowed configuration, as schematically illustrated in FIGS. **2** and **4**.

To permit the reconfiguring of the mouthpiece assembly from the stowed configuration to the dispensing configuration, cap assemblies **14** according to the present disclosure may (but are not required to) include a user release mechanism **60** that is adapted to automatically disengage the first and second catch structures from each other upon actuation of the user release mechanism and thereby release the mouthpiece assembly to move via its bias from the stowed configuration to the dispensing configuration. As schematically illustrated in FIGS. **1-4**, the optional user release mechanism may therefore be tied to, or otherwise have a mechanical relationship with, the second catch structure of the base of the cap assembly. Additionally or alternatively, a user release mechanism according to the present disclosure may be tied to, or otherwise have a mechanical relationship with, the first catch structure of the mouthpiece assembly. Although schematically illustrated as part of the base of the cap assembly, a user release mechanism according to the present disclosure may also be part of, integral to, or otherwise disposed on, the mouthpiece assembly or the liquid container. Other configurations are also within the scope of the present disclosure.

Cap assemblies **14** according to the present disclosure may further include (but are not required to include) a vent, or air return assembly, **64** that is adapted to permit air from external the drink container to enter the internal compartment **24** of the liquid container **12** without having to pass through the liquid passage **36** of the mouthpiece assembly

18. Vent 64 is illustrated as being implemented on the base 16 of the cap assembly 14, with the particular position and/or orientation of the vent on the base not being critical to a particular embodiment. Vent 64, when present, may include no valve or may include a valve, such as a one-way and/or a pressure-actuated valve. It is within the scope of the present disclosure that the vent, when present, may be implemented as part of the mouthpiece assembly or as part of or on the liquid container. Other configurations are also within the scope of the present disclosure. Illustrative, non-exclusive examples of vents that may be utilized with or incorporated into drink containers according to the present disclosure are disclosed in U.S. Patent Application Publication No. 2006/0226110, incorporated herein.

Cap assemblies 14 according to the present disclosure may include (but are not required to include) a crimping portion 66 that is adapted to engage and crimp the crimping region 44 of the mouthpiece assembly. Additionally or alternatively, crimping portion 66 may be adjacent crimping region 44 of the mouthpiece assembly and adapted to engage and crimp the crimping region to prevent, or at least restrict, the flow of drink liquid through the liquid passage when the mouthpiece assembly is in the stowed configuration. That is, the crimping portion of the cap assembly may engage and facilitate the crimping region's folding upon and/or over itself when the mouthpiece assembly is reconfigured from the dispensing configuration to the stowed configuration. Crimping portion 66 may include any suitable structure, such as a lip, a flange, an edge, or any other structure that engages, either directly or indirectly, the crimping region of the mouthpiece assembly and facilitates crimping thereof when the mouthpiece assembly is reconfigured to the stowed configuration. For example, the crimping portion of the cap assembly may be defined by a portion, such as a lip or opening, of the through-passage 34. Other configurations are also within the scope of the present disclosure.

Drink containers 10 according to the present disclosure may include an optional straw 68 that is integral to or selectively coupled to, either directly or indirectly, the mouthpiece assembly and that extends into the liquid container, such as to (or at least proximate) a lower (internal) region of the liquid container. When present, straw 68 may enable a user to draw drink liquid from the drink container via outlet 42 without having to tip the drink container so that drink liquid may flow into the liquid passage 36. For example, some users may prefer to draw drink liquid from the drink bottle without having to lift and tilt the drink container to the generally horizontal or even inverted configuration that would be used if straw 68 were not present. Additionally or alternatively, some users may prefer or find it easier to draw drink liquid from the drink container using straw 68 rather than having to lift and tip the drink container.

Cap assemblies 14 according to the present disclosure optionally may include a collar member 70, as schematically represented in the example illustrated in FIGS. 3-4. In some embodiments, the collar member may be rigid or at least semi-rigid. In some examples of cap assemblies 14, the collar member 70, when present, may (but is not required to) be described as a component, or sub-part, of mouthpiece assembly 18. When present, the collar member may be pivotally coupled to the base or another portion of the cap assembly. In such examples, the cap assemblies may be described as including a hinge arrangement between the collar member and the base of the cap assembly such that the collar member together with at least a portion of the mouthpiece assembly may be pivoted from the stowed configuration to the dispensing configuration, as indicated by an arrow in FIG. 4, and vice versa. In such examples, the optional crimping portion 66 of the cap assembly may be defined by at least a portion of the collar member. In some examples, the collar member may be described as being external to the liquid passage defined by the mouthpiece assembly. Additionally or alternatively, collar members according to the present disclosure may surround, at least partially surround, encircle, or at least partially encircle a portion of the mouthpiece assembly, such as the crimping region of the mouthpiece assembly. Additionally or alternatively, collar members according to the present disclosure may include more than one discrete component, with at least one or more such discrete components being generally adjacent a portion of the mouthpiece assembly, including the crimping region of the mouthpiece assembly. Collar members according to the present disclosure also may be described as pivoting members or crimping members.

In examples of drink containers 10 that include a collar member 70, second catch structure 56 of mouthpiece securing mechanism 52 may be (but is not required to be) integral to, part of, or otherwise disposed on the collar member. Additionally or alternatively, examples of drink containers according to the present disclosure that include collar member 70 may include a second catch structure 56 that is integral to, part of, or otherwise disposed on a portion of, or another portion of, the mouthpiece assembly.

FIG. 5 schematically depicts an illustrative, non-exclusive example of a mouthpiece assembly 18, or at least a portion thereof, according to the present disclosure, which may be used with any drink container 10 and/or cap assembly 14 according to the present disclosure. As discussed, a mouthpiece assembly according to the present disclosure may optionally include a collar member. As illustrated and discussed, mouthpiece assembly 18 defines liquid passage 36 through which drink liquid may selectively flow, and further defines inlet 46 and outlet 42 of the liquid passage.

FIG. 5 graphically illustrates that mouthpiece assemblies 18 according to the present disclosure (including those depicted in FIGS. 1-4) include at least a mouthpiece portion 76 and a tube, or tube portion, 78. Mouthpiece portion 76 includes outlet 42 and is adapted to permit a user to selectively receive and consume drink liquid from the drink container. Mouthpiece portion 76 may take a variety of configurations including (but not limited to) mouthpiece portions that include a user-actuated valve adapted to permit selective dispensing of drink liquid from the drink container, mouthpiece portions that permit a user to draw, or suck, drink liquid from the drink container, mouthpiece portions that permit a user to squeeze drink liquid from the drink container, and/or other configurations of mouthpiece portions. Illustrative, non-exclusive examples of mouthpiece portions, including bite-actuated mouthpieces, that may be utilized with or incorporated into mouthpiece assemblies according to the present disclosure are disclosed in U.S. Patent Application Publication No. 2006/0226110, incorporated herein.

In examples of mouthpiece portions that include a user-actuated valve, such as a bite-actuated valve, the user-actuated valve may restrict dispensing of liquid from the liquid container even though the mouthpiece assembly may be in the dispensing configuration. When the mouthpiece portion includes a bite-actuated valve, which refers to a valve that is urged from a closed configuration to an open configuration by a user biting upon the valve (such as opposed sidewalls thereof) the mouthpiece portion may be referred to as a bite-actuated mouthpiece. Bite-actuated valves (and/or bite-actuated mouthpieces) are typically

biased to a closed configuration, and thus automatically return from an open configuration to a closed configuration upon release of the compressive forces being applied thereto by a user, such as by a user's teeth and/or mouth.

In examples of drink containers that include a collar member, as discussed, mouthpiece portions according to the present disclosure may (but are not required to) include structure **80** for securing the mouthpiece portion to the collar member. In some such examples, structure **80** may include one or more of a lip, flange, or other protrusion **82** adapted to engage and mate with a corresponding one or more of a channel or depression of the collar member, when present. Additionally or alternatively, structure **80** may include one or more of a channel or depression **84** that defines a seat for, and that is adapted to engage and mate with, a corresponding one or more of a lip, flange, or other protrusion of the collar member, when present. Accordingly, when assembled, structure **80** may restrict relative movement between the mouthpiece portion and the collar member and/or may restrict lateral translation of the collar member relative to the mouthpiece portion. Additionally or alternatively, other portions of mouthpiece assemblies, including the tube portion, may incorporate structure **80**. Structure **80** may additionally or alternatively be referred to as mouthpiece-securing structure **80**.

Tube **78** defines at least a portion of liquid passage **36** for drink liquid to flow from the internal compartment of the liquid container to mouthpiece portion **76**. Tube **78** may include crimping region **44**, which, as discussed, may be constructed of a resiliently deformable material and be adapted to prevent, or at least restrict, the flow of drink liquid through the liquid passage when the mouthpiece is in the stowed configuration. In some embodiments, tube **78** may include or define inlet **46** of the liquid passage. In embodiments where the tube does not include or define the inlet of the liquid passage, the tube is in fluid communication with the inlet of the passage.

As discussed, mouthpiece assemblies **18** according to the present disclosure may be adapted for selective anchoring, or coupling, to the base of the cap assembly and/or through the through-passage of the cap assembly. In some such examples, mouthpiece assemblies **18** may include structure for securing the mouthpiece assembly to the base of the cap assembly. For example, the mouthpiece assembly may include an anchor, or anchor portion, **86** that is adapted to prevent, or at least restrict, passing of the anchor portion through the through-passage of the base of the cap assembly. Anchor portion **86** may extend from tube **78** and/or may include a flange **88**, at least a portion of which may be sized to prevent, or at least restrict, passing of the anchor portion through the through-passage of the base of the cap assembly. Additionally or alternatively, anchor portion **86** may extend into tube **78** and/or may define a channel, depression, or other recess **90** that is sized and shaped to engage and mate with corresponding structure of the base of the cap assembly. Anchor portion **86** may, but is not required to, define the inlet to the liquid passage through the mouthpiece assembly. Anchor portions **86** and/or tubes **78** according to the present disclosure may further include (but are not required to include) an, or an additional, tab, or flange, **92** shaped, sized, or otherwise adapted for a user to grasp and thereby remove the mouthpiece assembly from the base of the cap assembly. Mouthpiece assemblies that include such an anchor portion may be described as being configured to be selectively coupled to and decoupled from the base of the cap assembly via an underside of the base, and thus not from a top side of the cap assembly.

Turning now to FIGS. **6-13**, an illustrative, non-exclusive example of a drink container **10** according to the present disclosure and various component parts thereof are illustrated. Where appropriate, the reference numerals from the schematic illustrations of FIGS. **1-5** are used to designate corresponding parts of drink containers **10** according to the present disclosure; however, the examples of FIGS. **6-13** are non-exclusive and do not limit the present disclosure to the illustrated embodiment. That is, neither drink containers nor various component parts thereof are limited to the specific embodiment disclosed and illustrated in FIGS. **6-13**, and drink containers according to the present disclosure may incorporate any number of the various aspects, configurations, characteristics, properties, etc. illustrated in the embodiment of FIGS. **6-13**, of FIGS. **1-4**, as well as variations thereof and without requiring the inclusion of all such aspects, configurations, characteristics, properties, etc. For the purpose of brevity, each previously discussed component part, or variant thereof, may not be discussed again with respect to FIGS. **6-13**; however, it is within the scope of the present disclosure that the previously discussed features, materials, variants, etc. may be utilized with the illustrated embodiment of FIGS. **6-13**. Similarly, it is also within the scope of the present disclosure that all of the component parts, and portions thereof, that are illustrated in FIGS. **6-13** are not required to all embodiments according to the present disclosure.

An illustrative, non-exclusive example of a mouthpiece assembly **18**, or at least a portion thereof, that may be used with drink containers **10** according to the present disclosure is illustrated in FIG. **6** and generally indicated at **118**. Mouthpiece assembly **118** is illustrated without an optional corresponding collar member; however, it is within the scope of the present disclosure that mouthpiece assembly **118** may further include a collar member, such as any of the collar members disclosed elsewhere herein. Mouthpiece assembly **118** includes a mouthpiece portion **76** in the form of a bite-actuated mouthpiece **176**, a tube **78**, and an anchor portion **86**. The bite-actuated mouthpiece, the tube, and the anchor portion collectively define a liquid passage **36**, with liquid passage **36** including an inlet **46** and an outlet **42**. Tube **78** includes a crimping region **44**.

As illustrated, bite-actuated mouthpiece **176** includes outlet **42**, through which drink liquid may be selectively dispensed. FIG. **9** illustrates the bite-actuated mouthpiece in an open, or dispensing, configuration with the outlet open to permit drink liquid to be dispensed therethrough, for example, as configured when a user applies opposing forces thereto with his/her teeth and/or lips. Bite-actuated mouthpiece **176** also includes a pair of channels **84** (as perhaps best seen in FIG. **11**) that are adapted to engage and mate with corresponding structure of a collar member.

Anchor portion **86** includes a flange **88** sized and shaped to prevent, or at least restrict, mouthpiece assembly **118** from passing through a corresponding through-passage of a base of a cap assembly. Anchor portion **86** further includes three additional flanges, or ribs, **94** that are sized and shaped to provide a friction-fit arrangement with a through-passage of a corresponding base of a cap assembly. Anchor portion **86** also includes a tab **92** sized and shaped for a user to grasp and thereby remove the mouthpiece portion, the tube, and the anchor portion from a base of a corresponding cap assembly by urging the mouthpiece assembly downward and away from the underside of the cap assembly.

The illustrative, non-exclusive bite-actuated mouthpiece **176**, tube **78**, and anchor portion **86** of mouthpiece assembly **118** illustrated in FIG. **6** are constructed as a unitary assem-

bly of a resiliently deformable material. As illustrated, the mouthpiece portion has a greater exterior perimeter than the tube, and the anchor portion has a greater exterior perimeter than the tube and the mouthpiece portion. This unitary construction and the illustrative, non-exclusive relative sizes are not required in all embodiments, and other configurations are within the scope of the present disclosure.

An illustrative, non-exclusive example of a drink container **10** including mouthpiece assembly **118** of FIG. **6** is illustrated in FIGS. **7-8**, is generally indicated at **100**, and may be referred to as a drink bottle **100**. Drink bottle **100** includes a liquid container **12** in the form of a rigid bottle **112**, and a cap assembly **14** indicated generally at **114**. Cap assembly **114** is further illustrated in FIGS. **9-13** with FIGS. **7**, **9**, and **12** illustrating mouthpiece assembly **118** in a dispensing configuration, and with FIGS. **8**, **10**, and **13** illustrating mouthpiece assembly **118** in a stowed configuration. In the illustrative non-exclusive example of drink bottle **100**, a portion of the mouthpiece assembly is adapted to be selectively pivoted between the dispensing configuration and the stowed configuration, and as discussed, may be biased to pivot automatically to the dispensing configuration when not restrained from moving under this bias.

Cap assembly **114** of drink bottle **100** includes a base **116** that includes a vent **64** in the form of an air return assembly with a pressure-actuated valve, a mouthpiece assembly **118** that includes a collar member **70**, and a user release mechanism **60**. Cap assembly **114** of drink bottle **100** further includes a handle **202** that projects away from base **116** and that includes a pair of lateral guards **204** that at least partially define a stowing region **206**. Stowing region **206** is sized and otherwise adapted to receive at least a portion of the mouthpiece assembly between the pair of lateral guards when the mouthpiece assembly is in the stowed configuration. In the non-exclusive example of drink bottle **100**, stowing region **206** receives bite-actuated mouthpiece **176** and at least a portion of tube **78**. When present, handle **202** may (but is not required to) define a closed perimeter, or boundary, **208** through which a lanyard, karabiner, belt, strap, user's finger, or other structure may extend to hold and/or retain the drink bottle in a selected position. Other configurations of cap assemblies and handles, including cap assemblies without handles, are also within the scope of the present disclosure. It is also within the scope of the present disclosure that other cap assemblies **14** and drink containers **10** may include a handle, including but not limited to the illustrative, non-exclusive example of a handle depicted in FIGS. **7-13**.

The illustrative, non-exclusive example of mouthpiece assembly **118** of drink bottle **100** includes an optional rigid collar member **70**, which is generally indicated at **170**. Rigid collar member **170** defines a through-passage **210** through which tube **78** and a portion of bite-actuated mouthpiece **176** extends. As perhaps best seen in FIGS. **12-13**, through-passage **210** is defined by an opening **212** that is distal to the anchor portion of the mouthpiece assembly and an opening **214** that is proximal to the anchor portion of the mouthpiece assembly. Opening **212** is defined by a rim **216** that engages the bite-actuated mouthpiece assembly **176**. That is, rim **216** engages and mates with channels **84** of the mouthpiece portion to effectively couple the rigid collar member to the mouthpiece portion and generally restrict lateral translation of the rigid collar member relative to the mouthpiece portion. Accordingly, when the rigid collar member is pivoted, at least the mouthpiece portion of the mouthpiece assembly pivots with it.

Opening **214** of the rigid collar member is defined by a rim **218**, which further defines a crimping portion **66**. As discussed, crimping portion **66** is adjacent crimping region **44** of tube **78** of the mouthpiece assembly. Accordingly, when the rigid collar member is pivoted from the dispensing configuration to the stowed configuration, the crimping portion **66** engages and crimps the crimping region of the tube to thereby restrict the flow of drink liquid through the liquid passage when the mouthpiece assembly is in the stowed configuration, as perhaps best seen in FIG. **13**.

In the illustrated example, the crimping portion of the rigid collar member does not engage the crimping region of the tube when the mouthpiece assembly is in the dispensing configuration, as perhaps best seen in FIG. **12**; however, it is within the scope of the present disclosure that the crimping portion of the rigid collar member does engage and even partially crimps the crimping region of the tube when the mouthpiece assembly is in the dispensing configuration, as long as the tube is not crimped to such a degree that drink liquid is prevented from flowing through the liquid passage when the mouthpiece assembly is in the dispensing configuration.

The rigid collar member of drink bottle **100** is pivotally, or hingedly, coupled to the handle of cap assembly **114**. Accordingly, handle **202** and rigid collar member **170** collectively define a hinge **230**, which is indicated in FIG. **9**. Lateral guards **204** each include a cylindrical depression **232** that is sized and shaped to mate with a corresponding cylindrical protrusion **234** extending from opposing sides of the rigid collar member, as perhaps best seen in FIG. **11**.

As discussed, cap assemblies **14** according to the present disclosure include a mouthpiece securing mechanism **52** that is adapted to selectively retain the mouthpiece assembly in the stowed configuration. As illustrated, the base of cap assembly **114** includes a first catch structure **54**, and the rigid collar member **170** includes a second catch structure **56** that is adapted to engage and mate with the first catch structure when the mouthpiece assembly is in the stowed configuration. The first catch structure of cap assembly **114** includes a pair of cylindrical depressions **154** extending into the lateral guards **204** of the optional handle **202**, and the second catch structure of the rigid collar member includes a pair of hemispherical protrusions **156** positioned and sized to mate with the depressions **154** and thereby retain the mouthpiece assembly in its stowed configuration upon a user configuring the mouthpiece assembly to its stowed configuration.

The lateral guards of drink cap assembly **114** further include (but are not required to include) a pair of channels, or depressions, **236** that provide clearance for the hemispherical protrusions **156** to pass when the mouthpiece assembly is reconfigured from the dispensing configuration to the stowed configuration and the first and second catch structures are engaged. Channels **236** may also be described as ramps. When the channels **236** are present, the hemispherical protrusions of the mouthpiece securing mechanism will not be overly worn-down due to engagement and friction with the lateral guards through repeated reconfigurations of the mouthpiece assembly by a user.

Cap assembly **114** of drink bottle **100** includes an optional user release mechanism **60**, indicated generally at **160**, and which is adapted to permit the reconfiguring of the mouthpiece assembly from the stowed configuration to the dispensing configuration. As perhaps best seen in FIG. **11**, user release mechanism **160** of drink bottle **100** includes a sliding member **238**. Sliding member **238** includes a user engagement pad **240** and an actuator, such as may be implemented and/or described as a generally planar portion **242**, that includes a pair of tabs **244** that slide within a pair of corresponding channels **246** that extend into lateral guards

204 of handle 202. Sliding member 238 is configured to slide relative to the base of the cap assembly upon user actuation of the user release mechanism 160 (i.e., upon user engagement and translation of the user engagement pad 240). Planar portion 242 of sliding member 238 partially defines stowing region 206 together with lateral guards 204 of handle 202.

Sliding member 238 also includes a pair of biasing members 250 that slide within channels 246, and which may be integral with the sliding member. Biasing members 250 may be described as springs or leaf springs and may include arcuate projections, or tabs, that are biased to the positions illustrated in FIG. 11. A pair of wedge-shaped tabs 252 is positioned within the channels 246, and when the sliding member 238 is caused to translate toward tube 78 of the mouthpiece assembly in response to user engagement and translation of the user engagement pad, biasing members 250 are compressed against the wedge-shaped tabs. When the user engagement pad is released by a user, the sliding member is biased, or springs, away from tube 78 of the mouthpiece assembly.

Sliding member 238 includes a collar engagement portion 254 that is adapted to engage the rigid collar member and force disengagement of the first and second catch structures upon actuation of the user release mechanism (i.e., upon engagement and translation of the user engagement pad). The collar engagement portion 254 of drink bottle 100 is in the form of a tab that extends away from the planar portion. Accordingly, upon actuation of user release mechanism 160, the collar engagement portion engages rim 216 of the rigid collar member and forces disengagement of the first and second catch structures. Additionally or alternatively, a collar engagement portion according to the present disclosure may be adapted to translate relative to and wedge the rigid collar member so that the rigid collar member is forced to pivot. Pivoting of the rigid collar member thereby forces disengagement of the first and second catch structures and thus forces the mouthpiece assembly to reconfigure from the stowed configuration to the dispensing configuration due to the bias of the mouthpiece assembly.

Sliding member 238 includes an optional depression 256 that extends into planar portion 242 and adjacent tab 254 (as perhaps best seen in FIG. 11). Depression 256 is sized and shaped to receive at least a portion of the rigid collar member when the mouthpiece assembly is in the stowed configuration.

In addition, or in the alternative, to user release mechanism 160 providing a mechanism for releasing the mouthpiece assembly from the stowed configuration to the dispensing configuration, mouthpiece assemblies according to the present disclosure also may include (but are not required to include) another form of user release mechanism 60. For example, the rigid collar member of drink bottle 100 may include a user engagement portion 260 that, when the mouthpiece assembly is in the stowed configuration, is adapted to receive a user-imparted force that pivots the mouthpiece assembly and thereby forces disengagement of the first and second catch structures of the mouthpiece securing mechanism. User engagement portion 260 may be described as a user release mechanism 60, or at least a portion thereof, according to the present disclosure.

Rigid collar member 170 of drink bottle 100 further includes an optional stop surface 262 that does not engage the base of the cap assembly when the mouthpiece assembly is in the stowed configuration but that does engage the base of the cap assembly when the mouthpiece assembly is in the dispensing configuration. Accordingly, the stop surface may thereby define a dispensing position of the mouthpiece portion. In other words, when the mouthpiece assembly is released from the stowed configuration, the stop surface may prevent the mouthpiece portion from pivoting beyond its intended position for dispensing drink liquid therefrom. Accordingly, the stop surface further prevents the tube of the mouthpiece assembly from folding over on itself, or crimping, in a direction opposite from the intended stowed configuration in which crimping of the tube is desired. Therefore, when a user is consuming drink liquid from the mouthpiece, the user may be prevented from accidentally restricting the liquid passage simply by imparting a pivoting force on the mouthpiece assembly away from the stowed configuration.

As seen in FIGS. 12-13, straw 68, when present, may be sized to be received within at least a portion of the liquid passage 36 of the mouthpiece assembly in a friction fit arrangement. Other configurations are also within the scope of the present disclosure.

The following lettered paragraphs represent non-exclusive ways of describing inventions according to the present disclosure.

A. A drink container, comprising:

a liquid container having a neck with an opening and having an internal compartment sized to hold a volume of potable drink liquid;

a cap assembly removably coupled to the liquid container, the cap assembly comprising:

- a base removably coupled to the neck of the liquid container and including a through-passage;
- a first catch structure;
- a mouthpiece assembly extending through the through-passage of the base and defining a liquid passage through which drink liquid from the liquid container may selectively flow, and further defining an inlet through which drink fluid in the internal compartment may enter the liquid passage and an outlet through which drink liquid from the internal compartment of the liquid container is selectively dispensed, wherein the mouthpiece assembly is configured to be selectively configured between a dispensing configuration, in which the liquid passage permits drink liquid to flow from the internal compartment at least into the liquid passage, and a stowed configuration, in which the liquid passage restricts the flow of drink liquid through the liquid passage, wherein the mouthpiece assembly is biased to the dispensing configuration, and wherein the mouthpiece assembly comprises:
  - a mouthpiece portion that includes the outlet;
  - a tube that defines at least a portion of the liquid passage for drink liquid to flow from the internal compartment to the mouthpiece portion, wherein the tube includes a crimping region constructed of a resiliently deformable material and is adapted to restrict the flow of drink liquid through the liquid passage when the mouthpiece assembly is in the stowed configuration; and
  - a second catch structure adapted to be selectively engaged with the first catch structure to retain the mouthpiece assembly in the stowed configuration; and
- a user release mechanism adapted to automatically disengage the first and second catch structures upon actuation of the user release mechanism and thereby release the mouthpiece assembly to move via its bias from the stowed configuration to the dispensing configuration.

A1 The drink container of paragraph A, wherein the user release mechanism includes a mouthpiece assembly engagement portion adapted to engage the mouthpiece assembly and force disengagement of the first and second catch structures upon actuation of the user release mechanism.

A2 The drink container of any preceding paragraph, wherein the mouthpiece assembly further includes a rigid collar member that is pivotally coupled to the base and which includes a crimping portion; wherein the crimping portion is adjacent the crimping region of the tube and external of the liquid passage, wherein the rigid collar member engages and crimps the crimping region to restrict the flow of drink liquid through the liquid passage when the mouthpiece assembly is in the stowed configuration.

A2.1 The drink container of paragraph A2, wherein the rigid collar member includes the second catch structure, and further wherein the user release mechanism includes a collar engagement portion that is adapted to engage the rigid collar member and force disengagement of the first and second catch structures upon actuation of the user release mechanism.

A2.1.1 The drink container of paragraph A2.1, wherein when the mouthpiece assembly is in the stowed configuration and upon actuation of the user release mechanism, the collar engagement portion is adapted to translate relative to and wedge the rigid collar member to force the rigid collar member to pivot.

A2.2 The drink container of paragraph A2, wherein the rigid collar member is engaged with the mouthpiece portion.

A2.2.1 The drink container of paragraph A2.2, wherein the rigid collar member does not engage the tube when the mouthpiece assembly is in the dispensing configuration.

A2.2.2 The drink container of paragraph A2.2, wherein the mouthpiece portion includes a seat for the rigid collar member in which the rigid collar member engages the mouthpiece portion, wherein the seat restricts relative movement between the mouthpiece portion and the rigid collar member.

A2.3 The drink container of paragraph A2, wherein the rigid collar member includes a user engagement portion, wherein when the mouthpiece assembly is in the stowed configuration and upon a user imparted force on the user engagement portion that pivots the rigid collar member, the first and second catch structures disengage and thereby release the mouthpiece assembly to move via its bias from the stowed configuration to the dispensing configuration.

A2.4 The drink container of paragraph A2, wherein the rigid collar member includes a stop surface that does not engage the base of the cap assembly when the mouthpiece assembly is in the stowed configuration and that engages the base of the cap assembly when the mouthpiece assembly is in the dispensing configuration to define a dispensing position of the mouthpiece portion.

A3 The drink container of any preceding paragraph, wherein the crimping region at least partially biases the mouthpiece assembly to the dispensing configuration.

A4 The drink container of any preceding paragraph, wherein the mouthpiece portion and the tube are constructed as a unitary assembly of the resiliently deformable material.

A4.1 The drink container of any preceding paragraph, wherein the mouthpiece assembly further includes an anchor portion extending from the tube, wherein the anchor portion is sized to restrict passage of the anchor portion through the through-passage of the base of the cap assembly.

A6 The drink container of any preceding paragraph, wherein the cap assembly further includes a handle that projects away from the base of the cap assembly, wherein the handle includes a pair of lateral guards that at least partially define a stowing region that receives at least a portion of the mouthpiece assembly between the pair of lateral guards when the mouthpiece assembly is in the stowed configuration.

A6.1 The drink container of paragraph A6, wherein the stowing region is at least partially defined by a portion of the user release mechanism.

A6.1.1 The drink container of paragraph A6.1, wherein the user release mechanism includes an actuator that is configured to slide relative to the base of the cap assembly upon user actuation of the user release mechanism, wherein the stowing region is defined by at least the pair of lateral guards and the actuator of the user release mechanism.

A7 The drink container of any preceding paragraph, wherein the mouthpiece assembly is configured to be selectively coupled to and decoupled from an operative position on the base of the cap assembly via an underside of the base but not via a top side of the base.

A7.1 The drink container of paragraph A7, wherein the mouthpiece assembly further includes an anchor portion extending from the tube, wherein the anchor portion is sized to restrict passage of the anchor portion through the through-passage of the base of the cap assembly.

A7.1.1 The drink container of paragraph A7.1, wherein the mouthpiece portion, the tube, and the anchor portion are constructed as a unitary assembly of the resiliently deformable material.

A8 The drink container of any preceding paragraph, wherein the mouthpiece portion includes a bite-actuated mouthpiece.

A8.1 The drink container of paragraph A8, wherein the mouthpiece portion and the tube are constructed as a unitary assembly of the resiliently deformable material.

B. A drink container, comprising:

a liquid container having a neck with an opening and having an internal compartment sized to hold a volume of potable drink liquid;

a cap assembly removably coupled to the liquid container, the cap assembly comprising:

a base removably coupled to the neck of the liquid container and including a through-passage;

a mouthpiece assembly extending through the through-passage of the base and defining a liquid passage through which drink liquid from the liquid container may selectively flow, and further defining an outlet through which drink liquid is selectively dispensed, wherein the mouthpiece assembly is configured to be selectively configured between a dispensing configuration, in which the liquid passage permits drink liquid to flow from the internal compartment, and a stowed configuration, in which the liquid passage restricts the flow of drink liquid through the liquid passage, wherein the mouthpiece assembly is biased to the dispensing configuration, and wherein the mouthpiece assembly comprises:

a mouthpiece portion including the outlet;

a tube that defines at least a portion of the liquid passage for drink liquid to flow from the internal compartment to the mouthpiece portion, wherein the tube includes a crimping region constructed of a resiliently deformable material and is adapted to restrict the flow of drink liquid through the liquid passage when the mouthpiece assembly is in the stowed configuration, wherein the mouthpiece portion and the tube are constructed as a unitary assembly of the resiliently deformable material; and

a rigid collar member pivotally coupled to the base and including a crimping portion adjacent the crimping region of the tube and adapted to engage and crimp the crimping region to restrict the flow of drink liquid through the liquid passage when the mouthpiece assembly is in the stowed configuration;

a mouthpiece securing mechanism adapted to selectively retain the mouthpiece assembly in the stowed configuration; and

a user release mechanism adapted to automatically release the mouthpiece assembly to move via its bias from the stowed configuration to the dispensing configuration.

B1 The drink container of paragraph B, wherein the mouthpiece portion includes a bite-actuated mouthpiece.

B2 The drink container of any of paragraphs B-B1, wherein the mouthpiece assembly further includes an anchor portion extending from the tube, wherein the anchor portion is sized to restrict passage of the anchor portion through the through-passage of the base of the cap assembly.

B2.1 The drink container of paragraph B2, wherein the mouthpiece portion, the tube, and the anchor portion are constructed as a unitary assembly of the resiliently deformable material.

B3 The drink container of any of paragraphs B-B2.1, wherein the rigid collar member is engaged with the mouthpiece portion.

B3.1 The drink container of paragraph B3, wherein the rigid collar member does not engage the tube when the mouthpiece assembly is in the dispensing configuration.

B3.1.1 The drink container of paragraph B3.1, wherein the mouthpiece portion includes a seat for the rigid collar member, with the rigid collar member engaging the mouthpiece portion therein, wherein the seat restricts relative movement between the mouthpiece portion and the rigid collar member.

B4 The drink container of any of paragraphs B-B3.1.1, wherein the rigid collar member includes a user engagement portion, wherein when the mouthpiece assembly is in the stowed configuration and upon a user imparted force on the user engagement portion that pivots the rigid collar member, the mouthpiece assembly is released from the stowed configuration.

B5 The drink container of any of paragraphs B-B4, wherein the rigid collar member includes a stop surface that does not engage the base of the cap assembly when the mouthpiece assembly is in the dispensing configuration and that engages the base of the cap assembly when the mouthpiece assembly is in the dispensing configuration to define a dispensing position of the mouthpiece portion.

C. A drink container, comprising

a liquid container having a neck with an opening and having an internal compartment sized to hold a volume of potable drink liquid;

a cap assembly removably coupled to the liquid container, the cap assembly comprising:

a base removably coupled to the neck of the liquid container and including a through-passage;

a mouthpiece assembly extending through the through-passage of the base and defining a liquid passage, wherein the mouthpiece assembly is configured to be selectively configured between a dispensing configuration in which the liquid passage permits drink liquid to flow from the internal compartment for consumption by a user and a stowed configuration in which the liquid passage restricts the flow of drink liquid through the liquid passage, wherein the mouthpiece assembly is biased to the dispensing configuration, and wherein the mouthpiece assembly comprises:

a mouthpiece portion including an outlet through which drink liquid from the internal compartment may be dispensed when the mouthpiece assembly is in the dispensing configuration; and

means for selectively restricting the flow of drink liquid through the liquid passage when the mouthpiece assembly is in the stowed configuration;

means for selectively securing the mouthpiece assembly in the stowed configuration; and

means for automatically releasing the mouthpiece assembly from the stowed configuration to the dispensing configuration in response to a user input.

C1 The drink container of paragraph C, wherein the mouthpiece assembly is a bite-actuated mouthpiece that is biased to a closed configuration through which drink liquid may not flow.

C2 The drink container of any of paragraphs C-C1, wherein the mouthpiece portion and the means for selectively restricting are a unitary assembly of a resiliently deformable material.

C3 The drink container of paragraph C2, wherein the mouthpiece assembly further includes an anchor portion, wherein the anchor portion is sized to restrict passage of the anchor portion through the through-passage of the base of the cap assembly, and wherein the unitary assembly includes the anchor portion.

D. A mouthpiece assembly that defines a liquid passage through which drink liquid from a liquid container may selectively flow, comprising:

a mouthpiece portion that defines an outlet to the mouthpiece assembly through which drink fluid may be selectively dispensed;

a tube that defines at least a portion of the liquid passage for drink liquid to flow from the liquid container to the mouthpiece portion, wherein the tube is at least partially constructed of a resiliently deformable material; and

an anchor portion extending from the tube, wherein the anchor portion is adapted to secure the mouthpiece assembly to a cap assembly of a liquid container;

wherein one of the tube and the anchor portion defines an inlet to the mouthpiece assembly through which drink fluid may selectively enter the liquid passage.

D1 The mouthpiece assembly of paragraph D, wherein the mouthpiece portion and the tube are constructed as a unitary assembly of the resiliently deformable material.

D2 The mouthpiece assembly of paragraph D, wherein the mouthpiece assembly, the tube, and the anchor portion are constructed as a unitary assembly of the resiliently deformable material.

D3 The mouthpiece assembly of any of paragraphs D-D2, wherein the mouthpiece portion has a greater exterior perimeter than the tube and the anchor portion has a greater exterior perimeter than the tube.

D4 The mouthpiece assembly of any of paragraphs D-D3, wherein the tube includes a crimping region constructed of the resiliently deformable material and is adapted to restrict the flow of drink fluid through the liquid passage when the tube is crimped.

D5 The mouthpiece assembly of any of paragraphs D-D4, wherein the mouthpiece assembly is configured to be selectively configured between a dispensing configuration, in which the liquid passage permits drink liquid to flow from the liquid container at least into the liquid passage, and a stowed configuration, in which the liquid passage restricts

the flow of drink liquid through the liquid passage, wherein the mouthpiece assembly is biased to the dispensing configuration.

D5.1 The mouthpiece assembly of paragraph D5, wherein the tube at least partially biases the mouthpiece assembly to the dispensing configuration.

D6 The mouthpiece assembly of any of paragraphs D-D5.1, wherein the mouthpiece portion includes a user-actuated valve.

D7 The mouthpiece assembly of any of paragraphs D-D6, wherein the mouthpiece portion includes a bite-actuated mouthpiece.

E A cap assembly, comprising:

a base adapted to be removably coupled to a liquid container and including a through-passage; and

a mouthpiece assembly according to any of paragraphs D-D7 and extending though the through-passage of the base.

E1 The cap assembly of paragraph E,

wherein the mouthpiece assembly is configured to be selectively configured between a dispensing configuration, in which the liquid passage permits drink liquid to flow from the internal compartment at least into the liquid passage, and a stowed configuration, in which the liquid passage restricts the flow of drink liquid through the liquid passage, wherein the mouthpiece assembly is biased to the dispensing configuration;

wherein the cap assembly includes a first catch structure; and

wherein the mouthpiece assembly includes a second catch structure adapted to be selectively engaged with the first catch structure to retain the mouthpiece assembly in the stowed configuration.

E2 The cap assembly of paragraph E1, wherein the cap assembly further includes a user release mechanism to automatically disengage the first and second catch structures upon actuation of the user release mechanism and thereby release the mouthpiece assembly to move via its bias from the stowed configuration to the dispensing configuration.

E2.1 The cap assembly of paragraph E2, wherein the user release mechanism includes a mouthpiece assembly engagement portion adapted to engage the mouthpiece assembly and force disengagement of the first and second catch structures upon actuation of the user release mechanism.

E2.2 The cap assembly of any of paragraphs E-E2.1,

wherein the tube include a crimping region;

wherein the mouthpiece assembly further includes a rigid collar member that is pivotally coupled to the base and which includes a crimping portion, wherein the crimping portion is adjacent the crimping region of the tube and external of the liquid passage, wherein the rigid collar member engages and crimps the crimping region to restrict the flow of drink liquid through the liquid passage when the mouthpiece assembly is in the stowed configuration.

E2.2.1 The cap assembly of paragraph E2.2, wherein the rigid collar member includes the second catch structure, and further wherein the user release mechanism includes a collar engagement portion that is adapted to engage the rigid collar member and force disengagement of the first and second catch structures upon actuation of the user release mechanism.

E2.2.1.1 The cap assembly of paragraph E2.2 or E2.2.1, wherein when the mouthpiece assembly is in the stowed configuration and upon actuation of the user release mechanism, the collar engagement portion is adapted to translate relative to and wedge the rigid collar member to force the rigid collar member to pivot.

E2.2.2 The cap assembly of any of paragraphs E2.2-E2.2.1.1, wherein the rigid collar member is engaged with the mouthpiece portion.

E2.2.2.1 The cap assembly of any of paragraphs E2.2-E2.2.2, wherein the rigid collar member does not engage the tube when the mouthpiece assembly is in the dispensing configuration.

E2.2.2.2 The cap assembly of any of paragraphs E2.2-E2.2.2.1, wherein the mouthpiece portion includes a seat for the rigid collar member in which the rigid collar member engages the mouthpiece portion, wherein the seat restricts relative movement between the mouthpiece portion and the rigid collar member.

E2.2.3 The cap assembly of any of paragraphs E2.2-E2.2.2.2, wherein the rigid collar member includes a user engagement portion, wherein when the mouthpiece assembly is in the stowed configuration and upon a user imparted force on the user engagement portion that pivots the rigid collar member, the first and second catch structures disengage and thereby release the mouthpiece assembly to move via its bias from the stowed configuration to the dispensing configuration.

E2.2.4 The cap assembly of any of paragraphs E2.2-E2.2.3, wherein the rigid collar member includes a stop surface that does not engage the base of the cap assembly when the mouthpiece assembly is in the stowed configuration and that engages the base of the cap assembly when the mouthpiece assembly is in the dispensing configuration to define a dispensing position of the mouthpiece portion.

E3 The cap assembly of any of paragraphs E-E2.2.4,

wherein the mouthpiece assembly is configured to be selectively configured between a dispensing configuration, in which the liquid passage permits drink liquid to flow from the internal compartment at least into the liquid passage, and a stowed configuration, in which the liquid passage restricts the flow of drink liquid through the liquid passage, wherein the mouthpiece assembly is biased to the dispensing configuration; and

wherein the cap assembly further comprises:

a handle that projects away from the base of the cap assembly, wherein the handle includes a pair of lateral guards that at least partially define a stowing region that receives at least a portion of the mouthpiece assembly between the pair of lateral guards when the mouthpiece assembly is in the stowed configuration.

E4 The cap assembly of any of paragraphs E-E3, wherein the mouthpiece assembly is configured to be selectively coupled to and decoupled from an operative position on the base of the cap assembly via an underside of the base but not via a top side of the base.

In the event that any of the references that are incorporated by reference herein define a term in a manner or are otherwise inconsistent with either the non-incorporated disclosure of the present application or with any of the other incorporated references, the non-incorporated disclosure of the present application shall control and the term or terms as used therein only control with respect to the patent document in which the term or terms are defined.

The disclosure set forth above encompasses multiple distinct inventions with independent utility. While each of these inventions has been disclosed in a preferred form or method, the specific alternatives, embodiments, and/or methods thereof as disclosed and illustrated herein are not to be considered in a limiting sense, as numerous variations are possible. The present disclosure includes all novel and non-obvious combinations and subcombinations of the various elements, features, functions, properties, methods and/or

steps disclosed herein. Similarly, where any disclosure above or claim below recites "a" or "a first" element, step of a method, or the equivalent thereof, such disclosure or claim should be understood to include one or more such elements or steps, neither requiring nor excluding two or more such elements or steps.

Inventions embodied in various combinations and subcombinations of features, functions, elements, properties, steps and/or methods may be claimed through presentation of new claims in a related application. Such new claims, whether they are directed to a different invention or directed to the same invention, whether different, broader, narrower, or equal in scope to the original claims, are also regarded as included within the subject matter of the present disclosure.

INDUSTRIAL APPLICABILITY

The drink containers of the present disclosure are applicable to the hydration fields, and are specifically applicable to portable drink containers from which users may selectively drink potable drink liquid.

The invention claimed is:

1. A drink container, comprising:

a liquid container having a neck with an opening and having an internal compartment sized to hold a volume of potable drink liquid; and

a cap assembly removably coupled to the liquid container, the cap assembly comprising:

a base removably coupled to the neck of the liquid container and including a through-passage;

a first catch structure coupled to the base;

a mouthpiece assembly extending through the through-passage of the base and defining a liquid passage through which drink liquid from the liquid container may selectively flow, and further defining an inlet through which drink liquid in the internal compartment may enter the liquid passage and an outlet through which drink liquid from the internal compartment of the liquid container is selectively dispensed; wherein the mouthpiece assembly is configured to be selectively configured between a dispensing configuration, in which the liquid passage permits drink liquid to flow from the internal compartment at least into the liquid passage, and a stowed configuration, in which drink liquid is restricted from being dispensed from the liquid container through the liquid passage; wherein the mouthpiece assembly is biased to the dispensing configuration; and wherein the mouthpiece assembly comprises:

a tube portion that defines at least a portion of the liquid passage for drink liquid to flow from the internal compartment to the outlet of the mouthpiece assembly; wherein the tube portion includes a crimping region constructed of a resiliently deformable material and adapted to prevent the flow of drink liquid through the liquid passage when the mouthpiece assembly is in the stowed configuration; wherein the crimping region includes opposing walls that are in contact with each other to seal the liquid passage within the crimping region when the mouthpiece assembly is in the stowed configuration;

a rigid collar member that is pivotally coupled to a portion of the cap assembly and through which the tube portion at least partially extends; and

a second catch structure adapted to be selectively engaged with the first catch structure to retain the mouthpiece assembly in the stowed configuration; and

a user release mechanism adapted to automatically disengage the first and second catch structures upon actuation of the user release mechanism and thereby release the mouthpiece assembly to move via its bias from the stowed configuration to the dispensing configuration;

wherein the cap assembly defines a stowing region sized to receive at least a portion of the mouthpiece assembly when the mouthpiece assembly is in the stowed configuration; wherein the user release mechanism includes a sliding member with a user engagement pad; wherein the user release mechanism is biased to urge the sliding member away from a position where the sliding member disengages the first and second catch structures; and wherein the sliding member is configured to slide relative to the base of the cap assembly to selectively disengage the first and the second catch structures.

2. The drink container of claim **1**, wherein the user engagement pad extends through a wall of the cap assembly for selective engagement by a user.

3. The drink container of claim **1**, wherein the sliding member is configured to slide relative to the base of the cap assembly within the stowing region to selectively disengage the first and the second catch structures.

4. The drink container of claim **1**, wherein the rigid collar member includes the second catch structure.

5. The drink container of claim **1**, wherein the tube portion includes structure for securing the tube portion to the rigid collar member and restricting relative movement between the tube portion and the rigid collar member.

6. The drink container of claim **1**, wherein the mouthpiece assembly further includes a mouthpiece portion that includes the outlet and is constructed of the resiliently deformable material.

7. The drink container of claim **6**, wherein the mouthpiece assembly includes mouthpiece-securing structure that secures the mouthpiece portion to the rigid collar member and restricts relative movement between the mouthpiece portion and the rigid collar member.

8. The drink container of claim **7**, wherein one of the mouthpiece portion and the tube portion includes the mouthpiece-securing structure; wherein the mouthpiece-securing structure includes one or more of a channel and a depression; wherein the rigid collar member includes one or more of a lip, a flange, and a protrusion; and wherein the one or more of the channel and the depression defines a seat that engages and mates with the one or more of the lip, the flange, and the protrusion.

9. The drink container of claim **6**, wherein the mouthpiece portion includes a bite-actuated mouthpiece; wherein the bite-actuated mouthpiece is selectively configured between an open configuration, in which the outlet is open and permits drink liquid to flow therethrough, and a closed configuration, in which the outlet restricts drink liquid from flowing therethrough; wherein the bite-actuated mouthpiece is biased to the closed configuration; and wherein the bite-actuated mouthpiece is selectively configured from the closed configuration to the open configuration responsive to a user biting upon opposed sidewalls of the bite-actuated mouthpiece.

10. The drink container of claim **6**, wherein the mouthpiece portion and the tube portion are constructed as a unitary assembly of the resiliently deformable material.

11. The drink container of claim **1**, wherein the mouthpiece assembly further includes an anchor portion that extends from the tube portion.

12. The drink container of claim **11**, wherein the anchor portion has a greater exterior perimeter than the tube portion.

13. The drink container of claim **11**, wherein the anchor portion and tube portion are constructed as a unitary assembly of the resiliently deformable material.

14. The drink container of claim **11**, wherein the anchor portion defines a recess that is sized and shaped to engage and mate with corresponding structure of the base of the cap assembly.

15. The drink container of claim **11**, wherein the anchor portion includes a projecting flange that provides a friction-fit arrangement with the through-passage of the base.

16. The drink container of claim **11**, wherein the anchor portion is sized to restrict passage of the anchor portion through the through-passage and thus restrict removal of the mouthpiece assembly via a top side of the cap assembly.

17. The drink container of claim **1**, wherein the crimping region at least partially biases the mouthpiece assembly to the dispensing configuration.

18. The drink container of claim **1**, wherein the cap assembly further includes a pair of lateral guards that at least partially define the stowing region, and wherein at least a portion of the mouthpiece assembly is received between the pair of lateral guards when the mouthpiece assembly is in the stowed configuration.

19. The drink container of claim **18**, wherein the cap assembly further includes a dust cover portion that extends between the lateral guards and which extends across the outlet when the mouthpiece assembly is in the stowed configuration.

20. The drink container of claim **1**, wherein the rigid collar member includes a stop surface that does not engage the base of the cap assembly when the mouthpiece assembly is in the stowed configuration and that engages the base of the cap assembly when the mouthpiece assembly is in the dispensing configuration to define a dispensing position of the mouthpiece portion.

* * * * *