US 20070039959A1

(19) United States

(12) Patent Application Publication

(10) Pub. No.: US 2007/0039959 A1

(43) Pub. Date: Feb. 22, 2007

Choi et al.

(54) DRINK BOTTLES WITH BITE-ACTUATED MOUTHPIECES

(76) Inventors: **Robert Choi**, Santa Rosa, CA (US); **Barley A. Forsman**, San Rafael, CA (US); **Jeremy Galten**, Petaluma, CA (US)

Correspondence Address:
KOLISCH HARTWELL, P.C.
200 PACIFIC BUILDING
520 SW YAMHILL STREET
PORTLAND, OR 97204 (US)

(21) Appl. No.: **11/588,476**

(22) Filed: **Oct. 26, 2006**

Related U.S. Application Data

(63) Continuation of application No. 11/313,488, filed on Dec. 20, 2005.

(60) Provisional application No. 60/670,828, filed on Apr. 11, 2005. Provisional application No. 60/706,700, filed on Aug. 8, 2005.

Publication Classification

(51) **Int. Cl.**

B65D	*39/00*	(2006.01)
B65D	*51/16*	(2006.01)
B65D	*51/00*	(2006.01)
B65D	*83/00*	(2006.01)
A47G	*19/22*	(2006.01)
B65D	*25/28*	(2006.01)

(52) **U.S. Cl.** **220/212.5**; 220/714; 220/709; 220/367.1; 215/388; 215/228

(57) **ABSTRACT**

Drink bottles, or containers, with bite-actuated mouthpieces. In some embodiments, the mouthpieces are self-sealing mouthpieces that are biased to return from a dispensing configuration to a closed configuration. The bottles may be rigid or collapsible and may include a removable cap assembly. In some embodiments, the bottles include a manual on/off valve adapted to prevent drink fluid from being dispensed regardless of the mouthpiece's configuration. In some embodiments, the bottles include a straw extending into the bottle and/or a drink tube extending from external of the bottle and/or an air return system. In some embodiments, the bottles include a dispensing spout that is pivotally coupled to the cap of the drink bottle. In some embodiments, the dispensing spout includes a mount for the mouthpiece and/or cooperates with the cap to provide a manual on/off valve to selectively restrict flow of drink fluid from the bottle regardless of the mouthpiece's configuration.

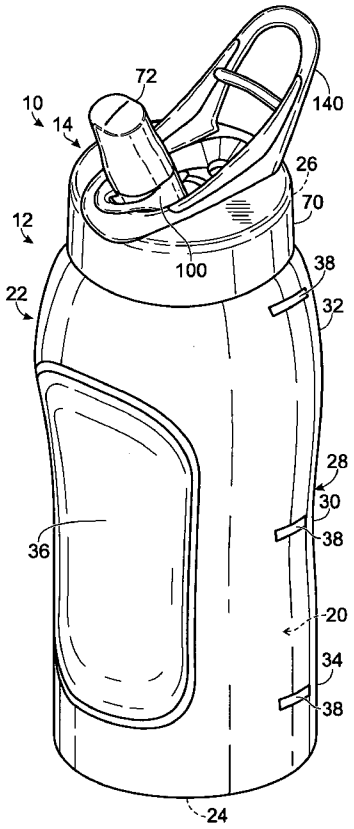

Fig. 1

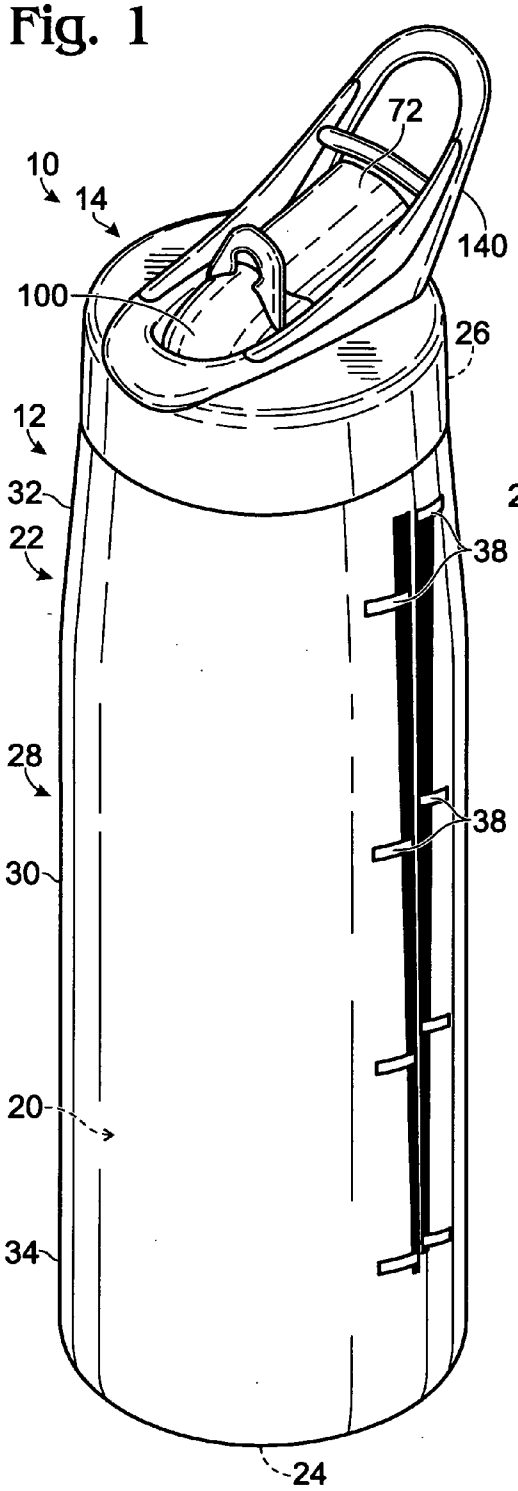
72
10
14
140
100
26
12
32
22
38
28
38
30
20
34
24

Fig. 2

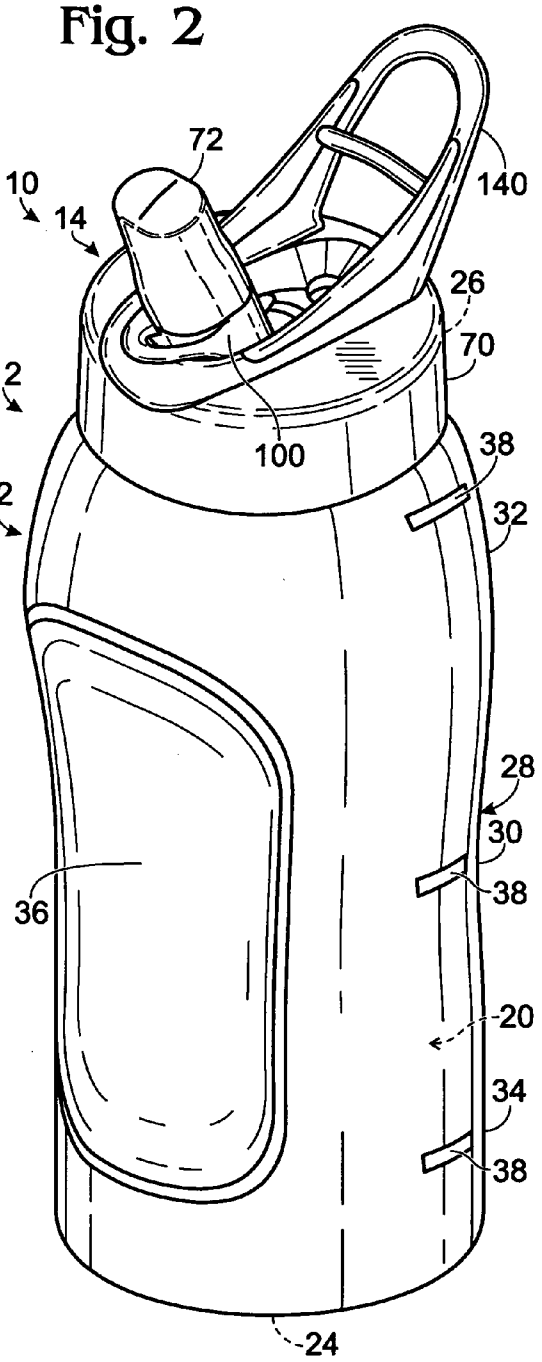
72
10
14
140
26
70
12
100
38
22
32
28
30
36
38
20
34
38
24

Fig. 3

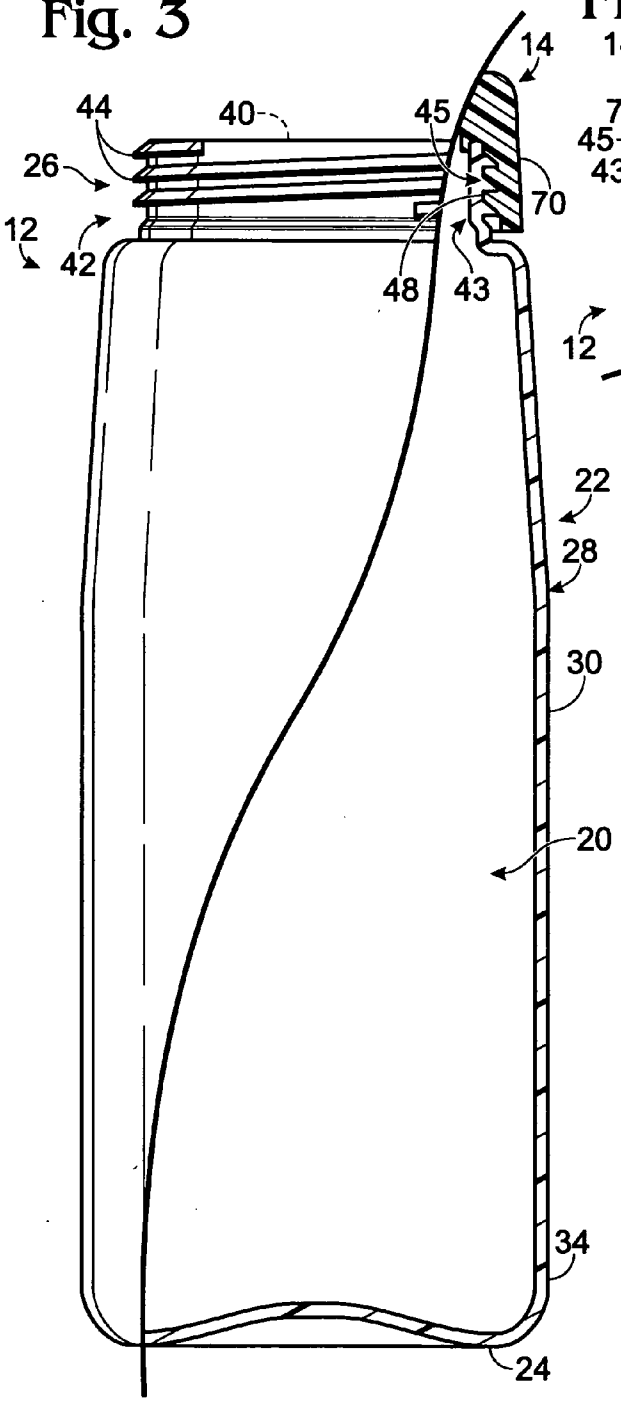

Fig. 4

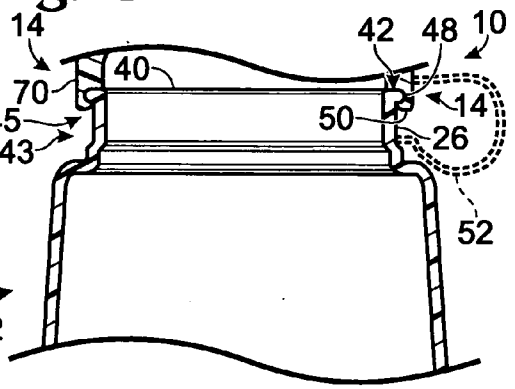

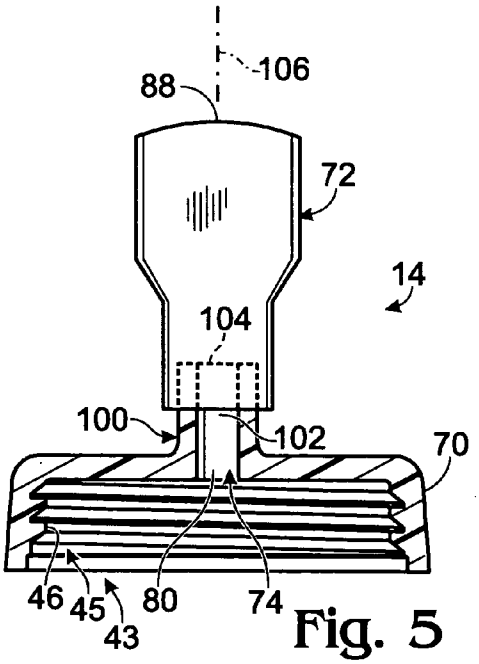

Fig. 5

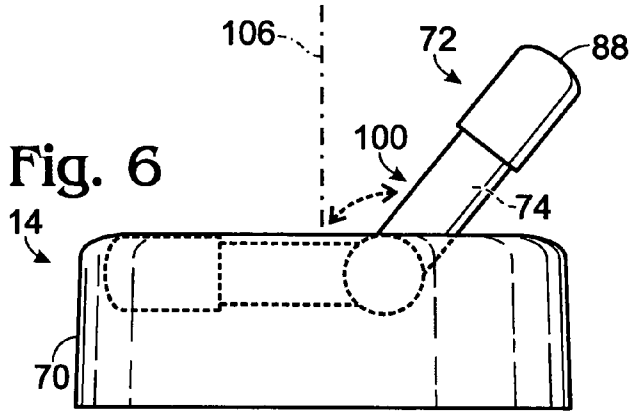

Fig. 6

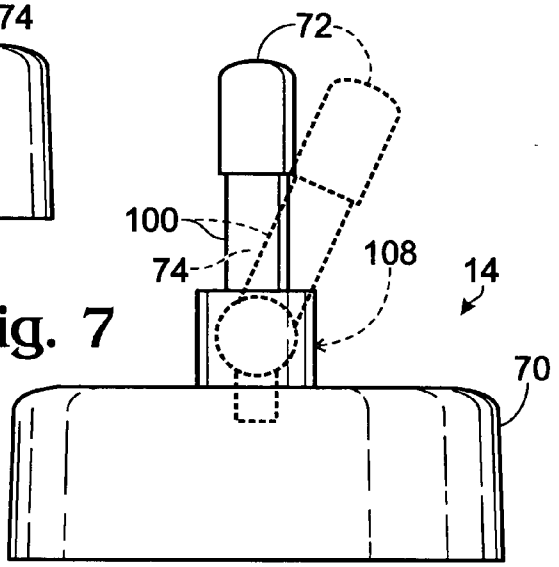

Fig. 7

Fig. 8

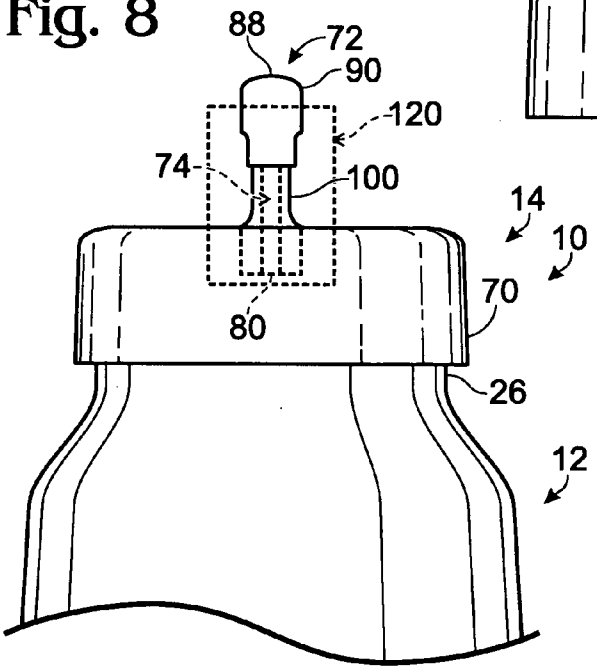

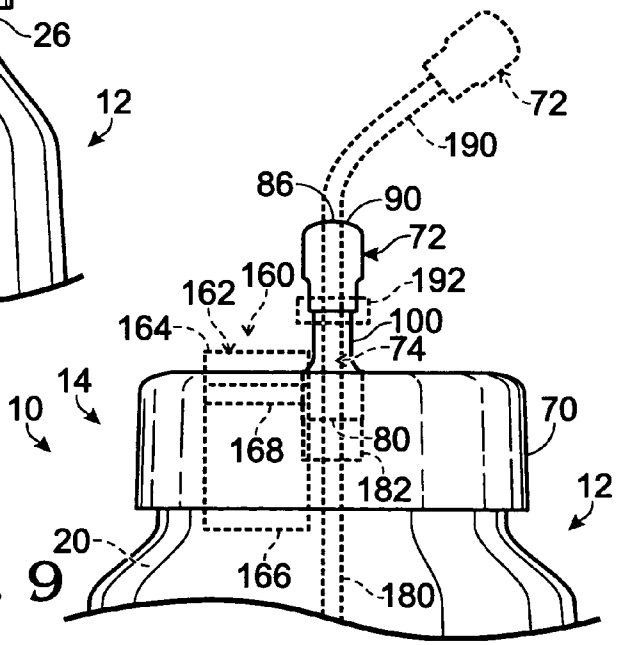

Fig. 9

Fig. 10

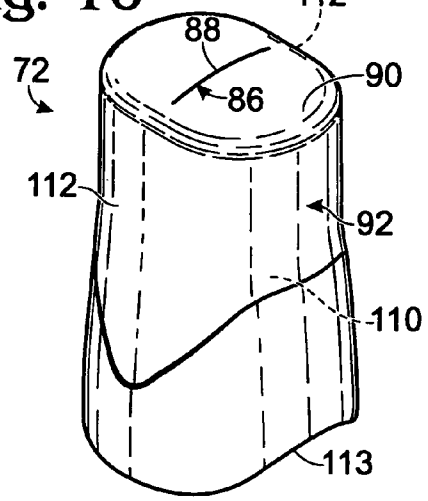

Fig. 11

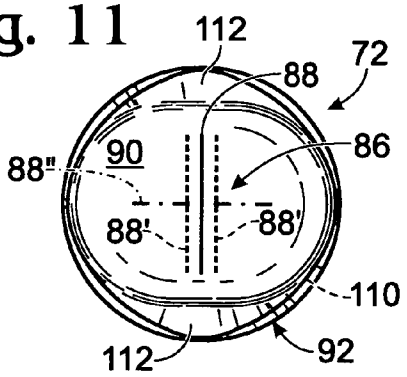

Fig. 12

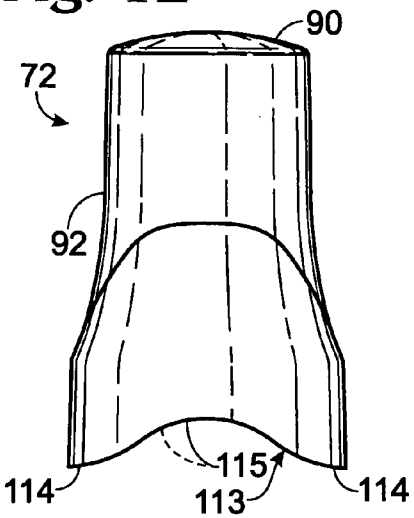

Fig. 13

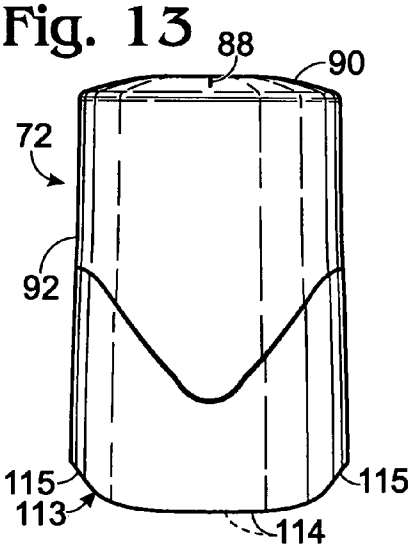

Fig. 14

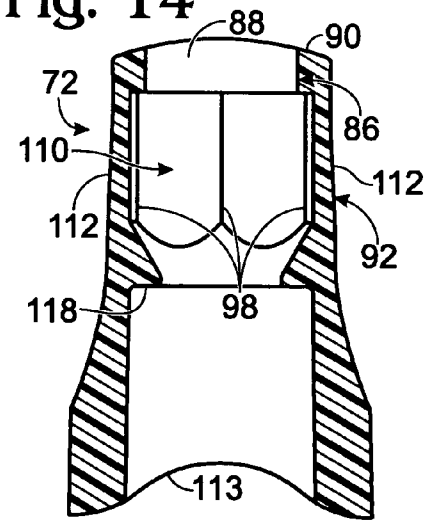

Fig. 15

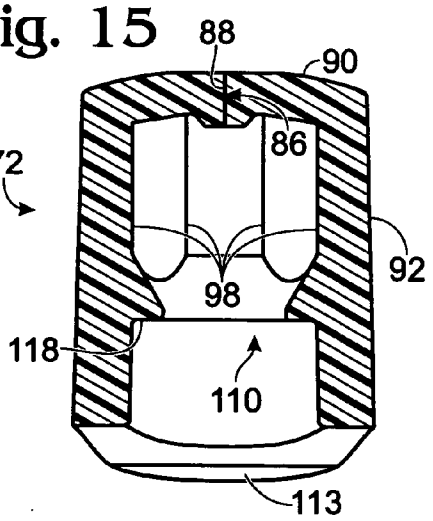

Fig. 16

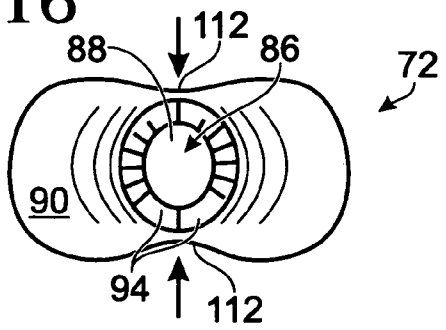

Fig. 17

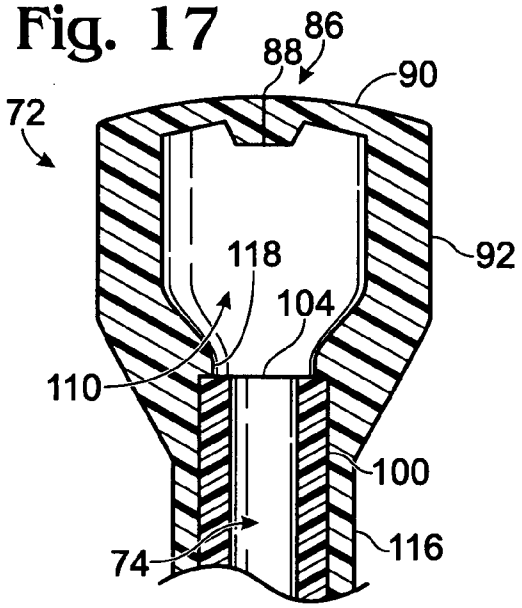

Fig. 18

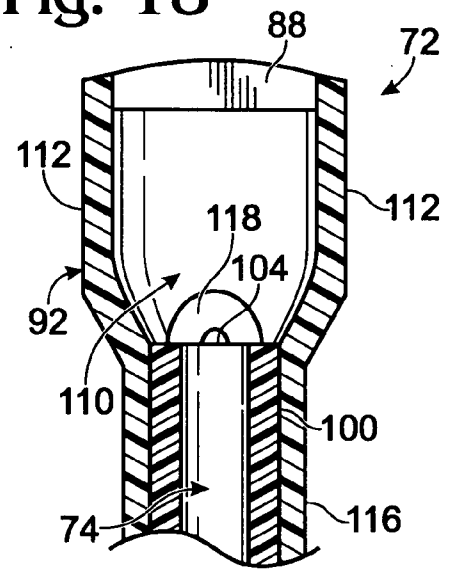

Fig. 19

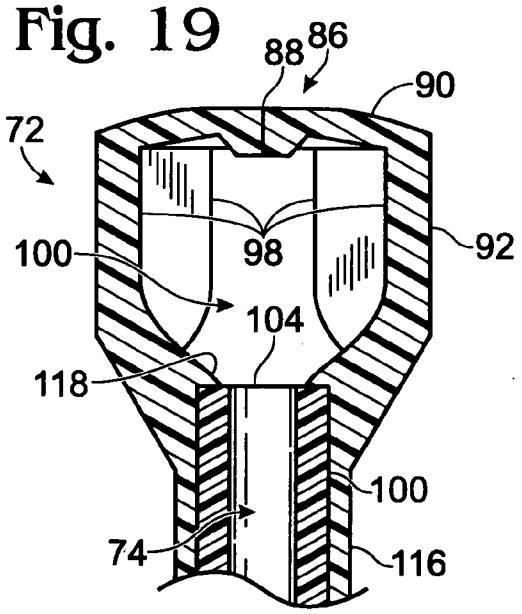

Fig. 20

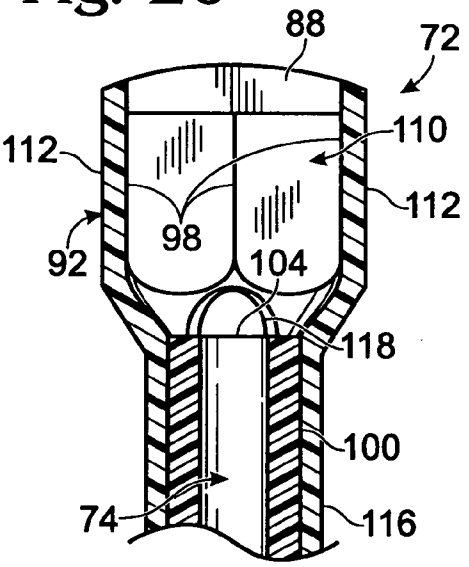

Fig. 21

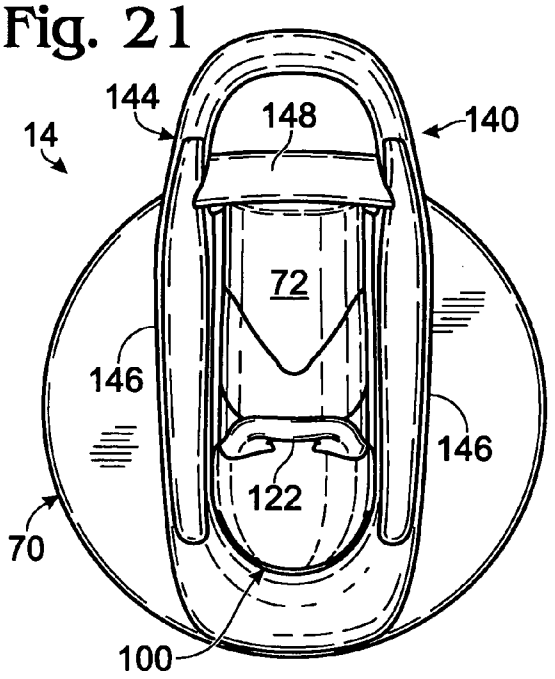

Fig. 22

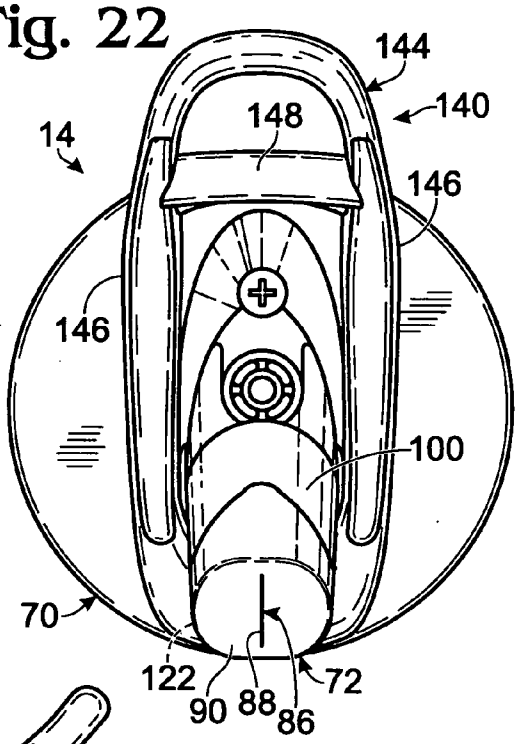

Fig. 23

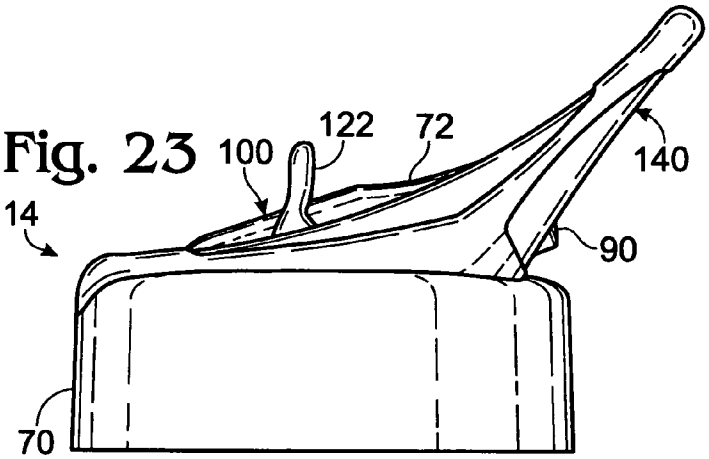

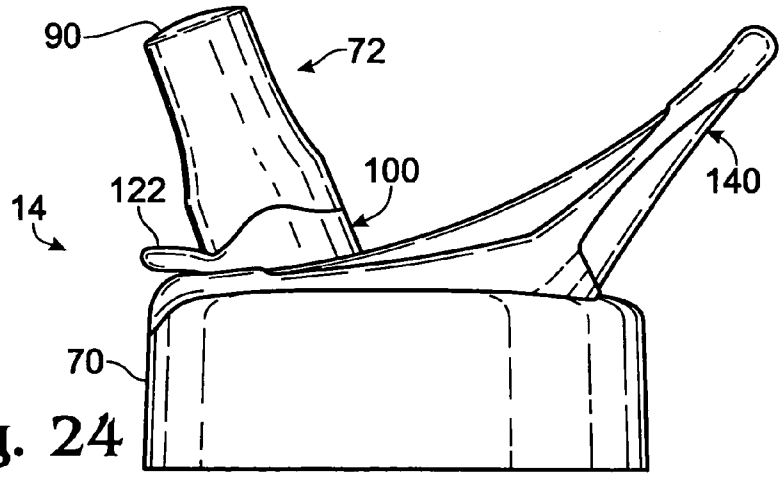

Fig. 24

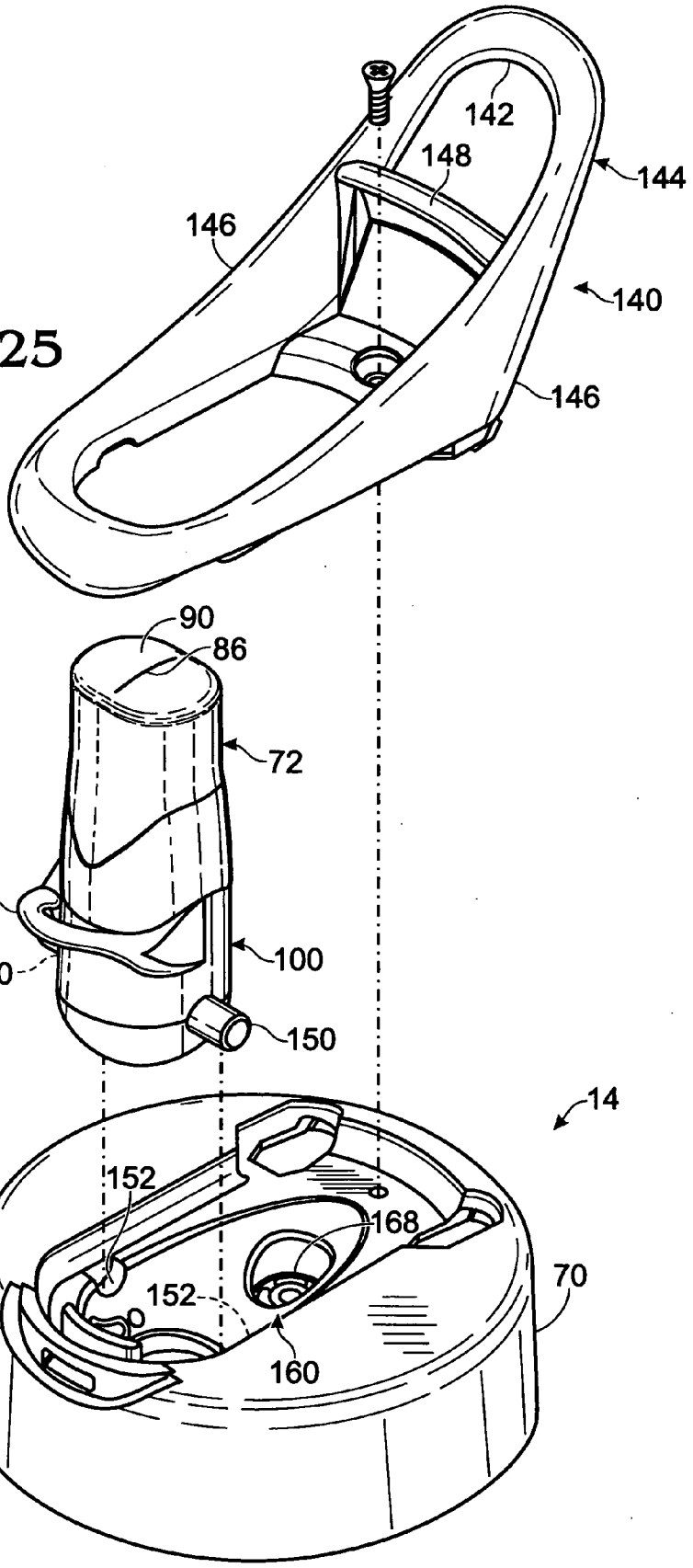
142
148
144
146
140
146
90
86
72
122
150
100
150
14
152
168
70
152
160

Fig. 25

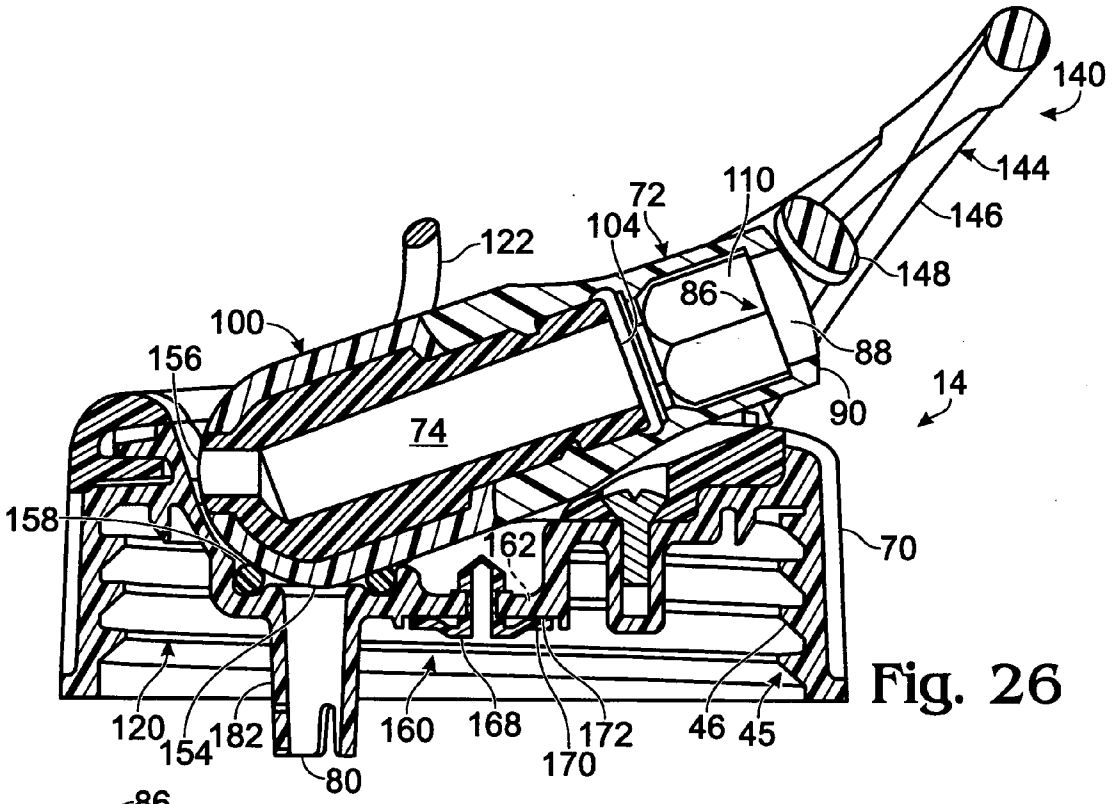
140
144
146
148
72
110
104
122
86
100
88
156
90
14
74
158
162
70
120
154
182
160
168
172
46
45
170
80

Fig. 26

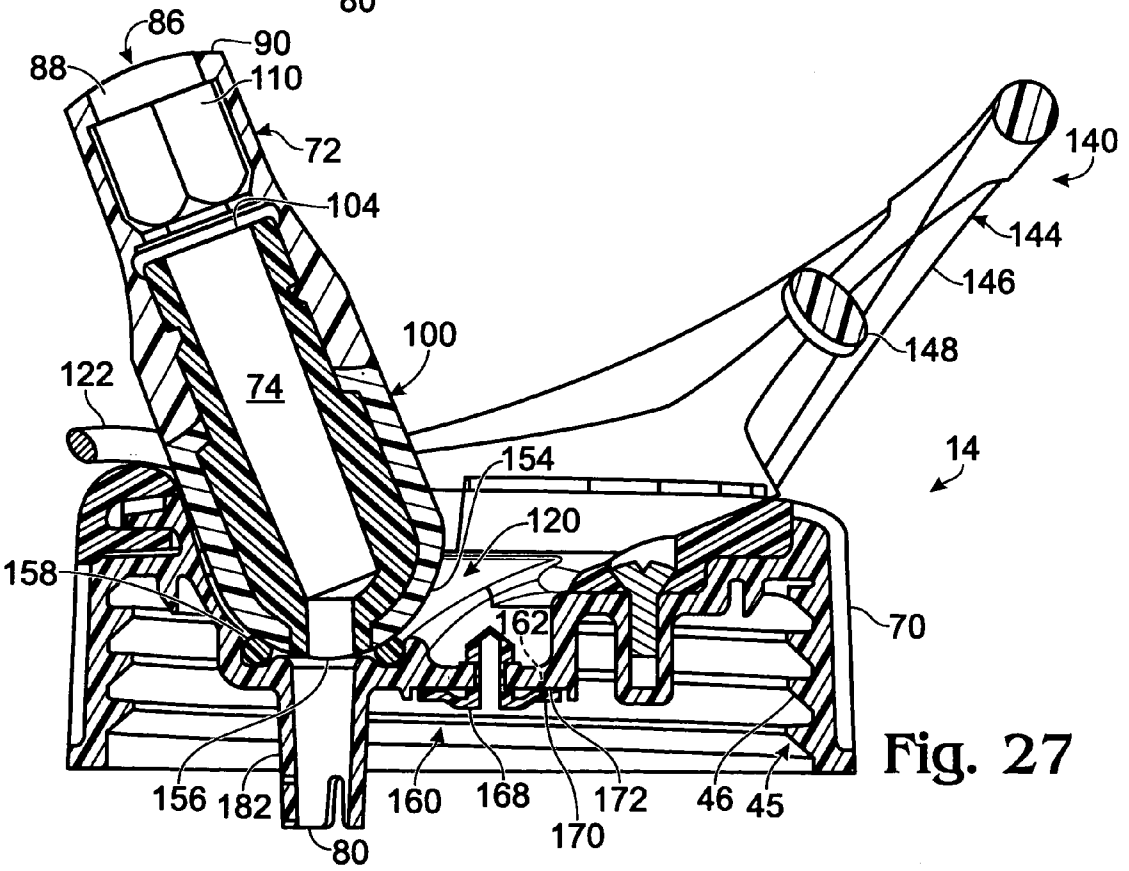
86
90
88
110
72
104
140
144
146
100
148
122
74
14
154
120
158
162
70
156
182
160
168
172
46
45
170
80

Fig. 27

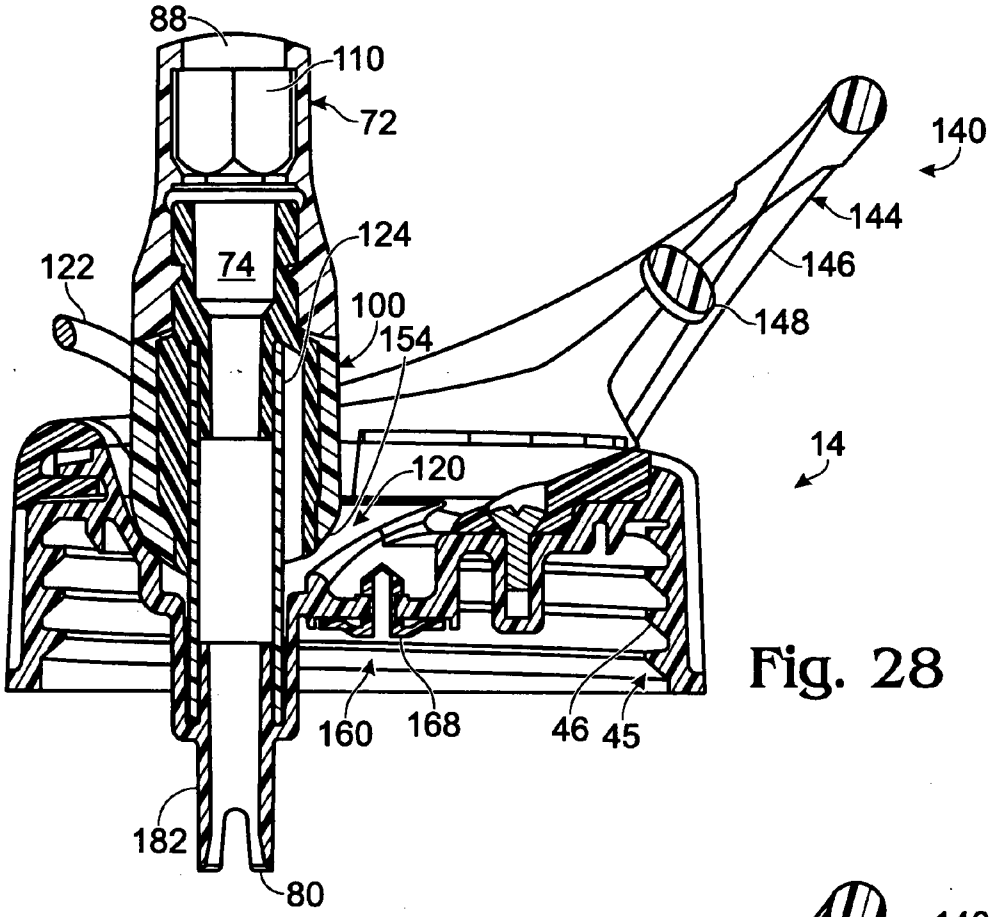
88
110
72
140
144
146
148
124
74
122
100
154
14
120
160
168
46
45
182
80

Fig. 28

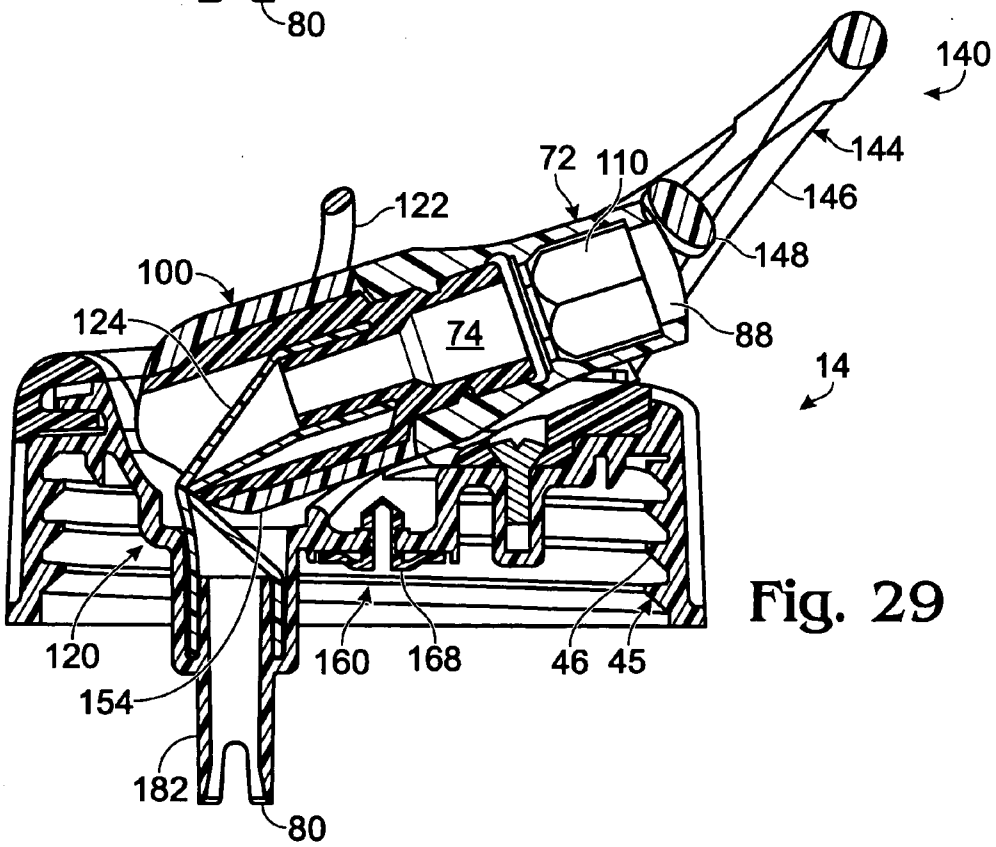
140
144
72
110
146
122
148
100
124
74
88
14
120
160
168
46
45
154
182
80

Fig. 29

DRINK BOTTLES WITH BITE-ACTUATED MOUTHPIECES

RELATED APPLICATIONS

[0001] The present application claims priority to U.S. Non-provisional patent application Ser. No. 11/313,488, which was filed on Dec. 20, 2005, and which claims priority to U.S. Provisional Patent Applications Ser. Nos. 60/670,828 and 60/706,700, which were respectively filed on Apr. 11, 2005 and Aug. 8, 2005. The complete disclosures of these applications are hereby incorporated herein for all purposes.

FIELD OF THE DISCLOSURE

[0002] The present disclosure relates generally to drink bottles, and more particularly to drink bottles with bite-actuated mouthpieces.

BACKGROUND OF THE DISCLOSURE

[0003] For some time people have recognized the need to stay hydrated. Conventionally, many individuals carry drink bottles that contain water or other potable beverages. These bottles are formed from plastic and include a cap. Some conventional drink bottles include a threaded or other neck from which a user drinks fluid contained in the drink bottle after removal of the cap. Some conventional drink bottles include a spout, or nozzle, from which the drink fluid may be drawn from the drink bottle without removing the cap of the drink bottle. Conventional spouts include straws and rigid spouts having an outlet through which drink fluid may flow. Other conventional drink bottles require the cap to be removed to permit drink fluid to be removed from the drink bottle.

SUMMARY OF THE DISCLOSURE

[0004] The present disclosure is directed to drink bottles that include bite-actuated mouthpieces. Bite-actuated mouthpieces are deformable mouthpieces which are urged from a closed, sealed configuration to a dispensing configuration when a user bites upon the mouthpiece. The mouthpieces may also be referred to as being self-sealing mouthpieces in that they are resiliently biased to automatically return to the closed configuration and thereby seal the slit or other opening through which drink fluid may flow when the valve is urged by a user to the dispensing, or open, configuration. In some embodiments, the bottles are rigid bottles, while in others they are collapsible bottles. In some embodiments, the bottles include a removable cap. In some embodiments, the bottles include a manual on/off valve that is adapted to prevent drink fluid from being dispensed regardless of the configuration of the bite-actuated mouthpiece. In some embodiments, the bottle includes a straw extending into the bottle and/or a drink tube extending from the cap of the bottle and to which the bite-actuated valve is in fluid communication. In some embodiments, the bottles include an air return system. In some embodiments, the bottles include a dispensing spout that is pivotally coupled to the cap of the drink bottle, and in some further embodiments, the dispensing spout includes a mount for a self-sealing, bite-actuated mouthpiece and/or cooperates with the cap to provide a manual on/off valve to selectively restrict flow of drink fluid from the bottle regardless of the configuration of the mouthpiece.

BRIEF DESCRIPTION OF THE DRAWINGS

[0005] FIG. **1** is a perspective view of a bite-actuated drink bottle according to the present disclosure.

[0006] FIG. **2** is a perspective view of another bite-actuated drink bottle according to the present disclosure.

[0007] FIG. **3** is a fragmentary, partial cross-sectional side elevation view of a fluid container that may be used with bite-actuated drink bottles according to the present disclosure.

[0008] FIG. **4** is a fragmentary cross-sectional side elevation view of portions of another bite-actuated drink bottle according to the present disclosure.

[0009] FIG. **5** is a partial cross-sectional side elevation view of a cap assembly that may be used with bite-actuated drink bottles according to the present disclosure.

[0010] FIG. **6** is a side elevation view of another cap assembly that may be used with bite-actuated drink bottles according to the present disclosure.

[0011] FIG. **7** is a side elevation view of another cap assembly that may be used with bite-actuated drink bottles according to the present disclosure.

[0012] FIG. **8** is a fragmentary somewhat schematic side elevation view of portions of another bite-actuated drink bottle according to the present disclosure.

[0013] FIG. **9** is a fragmentary somewhat schematic side elevation view of portions of another bite-actuated drink bottle according to the present disclosure.

[0014] FIG. **10** is an isometric view of a bite-actuated mouthpiece that may be used with bite-actuated drink bottles according to the present disclosure.

[0015] FIG. **11** is a top plan view of the mouthpiece of FIG. **10**.

[0016] FIG. **12** is a side elevation view of the mouthpiece of FIG. **10**.

[0017] FIG. **13** is a side elevation view of the mouthpiece of FIG. **10**.

[0018] FIG. **14** is a cross-sectional view of the mouthpiece of FIG. **12**.

[0019] FIG. **15** is a cross-sectional view of the mouthpiece of FIG. **13**.

[0020] FIG. **16** is a somewhat schematic top plan view of a bite-actuated mouthpiece in a dispensing configuration.

[0021] FIG. **17** is a cross-sectional view of another bite-actuated mouthpiece that may be used with bite-actuated drink bottles according to the present disclosure.

[0022] FIG. **18** is transverse cross-sectional view of the mouthpiece of FIG. **17**.

[0023] FIG. **19** is a cross-sectional view of another bite actuated mouthpiece that may be used with bite-actuated drink bottles according to the present disclosure.

[0024] FIG. **20** is a transverse cross-sectional view of the mouthpiece of FIG. **19**.

[0025] FIG. **21** is a top plan view of another suitable cap assembly for use with bite-actuated drink bottles according to the present disclosure, with the cap assembly's spout in a stowed configuration.

[0026] FIG. **22** is a top plan view of the cap assembly of FIG. **21**, with the cap assembly's spout in a dispensing configuration.

[0027] FIG. **23** is a side elevation view of the cap assembly of FIG. **21**.

[0028] FIG. **24** is a side elevation view of the cap assembly of FIG. **22**.

[0029] FIG. **25** is an exploded isometric view of the cap assembly of FIG. **21**.

[0030] FIG. **26** is a cross-sectional side elevation view of the cap assembly of FIG. **21**.

[0031] FIG. **27** is a cross-sectional side elevation view of the cap assembly of FIG. **22**.

[0032] FIG. **28** is a partial cross-sectional side elevation view of another cap assembly that may be used with bite-actuated drink bottles according to the present disclosure.

[0033] FIG. **29** is a partial cross-sectional side elevation view of the cap assembly of FIG. **28**, with the spout pivoted to a stowed configuration.

DETAILED DESCRIPTION AND BEST MODE OF THE DISCLOSURE

[0034] Examples of drink bottles according to the present disclosure are shown in FIGS. **1** and **2** and indicated generally at **10**. Drink bottles **10** according to the present disclosure include a fluid container **12** and a cap, or cap assembly, **14** that includes a mouthpiece **72**. Although referred to herein as being "drink bottles," it is within the scope of the present disclosure that the fluid container may have any suitable shape, including shapes that do not resemble conventional bottles, and may be formed from any suitable material. Accordingly, it is within the scope of the present disclosure that drink bottles **10** may additionally or alternatively be referred to as drink containers **10** and/or as beverage containers **10**. As discussed in more detail herein, drink bottles **10** according to the present disclosure will typically include a free-standing fluid container **12**. Drink bottles **10** according to the present disclosure will typically include a cap assembly with a base **70** that is adapted to be coupled to the fluid container and a bite-actuated mouthpiece, or valve assembly, **72** upon which a user may bite to configure the mouthpiece from a closed configuration to a dispensing configuration.

[0035] In FIGS. **1** and **2**, the cap assemblies are shown including optional pivotal mounts **100** to which the mouthpieces are mounted, and optional handles **140** that extend from the cap assembly. In FIG. **2**, the cap assembly is shown with the mount in a dispensing configuration in which the mouthpiece is oriented in a suitable position from which a user may draw drink fluid from the drink bottle through mouthpiece **72** when the user bites upon the mouthpiece or otherwise urges the mouthpiece from the illustrated sealed configuration to a dispensing configuration. In FIG. **1**, the illustrative example of a cap assembly **14** is shown with the mount in a stowed configuration, in which the mouthpiece is positioned closer to the base of the cap than in the dispensing configuration, with the stowed configuration typically corresponding to an orientation in which the mouthpiece is not suitably positioned for a user to bite upon the mouthpiece to configure the mouthpiece to a dispensing configuration. The stowed configuration may also be referred to as a retracted configuration, and the dispensing configuration may also be referred to as an extended configuration in which the distal end, or outlet, of the mount is oriented to extend generally away from the base of the cap assembly. The various configurations referred to herein may also be selectively referred to as positions without departing from the scope of the present disclosure.

[0036] As indicated in FIGS. **1-2** and perhaps best seen in FIG. **3**, fluid container **12** defines an internal compartment **20** that is sized to hold, or receive, up to a predetermined volume of potable drink fluid, or liquid. Illustrative examples of drink fluids include water, sports drinks, juices, energy drinks, and the like. Typically, container **12** will be sized to hold up to approximately two liters of drink fluid, with many embodiments of container **12** being sized to hold a maximum volume of less than two liters of drink fluid. It is within the scope of the present disclosure that container **12** may have any suitable size and shape, with illustrative, non-exclusive examples being shown in FIGS. **1-3**. Illustrative, non-exclusive examples of suitable sizes (i.e., capacities of drink fluid able to be received into the fluid container at one time) for fluid container **12** include 4 oz., 6 oz., 8 oz., 10 oz., 12 oz., 16 oz., 20 oz., 24 oz., 32 oz., 36 oz., 0.5 liters, 0.7 liters, 1 liter, 1.5 liters, 6-11 oz., 12-19 oz., 19-25 oz., 12-36 oz., 25-36 oz, and 10-70 oz. (with these illustrative examples referring to fluid ounces of drink fluid that may be poured in one filling into an empty fluid container). It is within the scope of the present disclosure that containers having different sizes, including sizes that are smaller than, larger than, or within the illustrative sizes and/or ranges presented above, may be used without departing from the scope of the present disclosure.

[0037] Fluid container **12** may be formed from any suitable material or combination of materials. Non-exclusive examples of factors that may be (but are not required to be) considered when selecting material(s) for the fluid container include the durability of the material, the intended potable drink fluid, or types of drink fluids, that will be contained in the fluid container, the intended life, or period of use, of the drink bottle, whether the fluid container is intended to be refilled or otherwise reused, environmental concerns, whether the fluid container is intended to resist being collapsed during use, whether the fluid container is designed to permit a user to collapse the fluid container inwardly when dispensing fluid therefrom, or to dispense drink fluid therefrom, whether the drink container (and optionally the cap assembly) is designed to be washed in a household dishwasher, etc. Illustrative examples of materials that may be used include polycarbonate, polyethylene, polypropylene, glass, metal, and the like. In some embodiments, it may be desirable for the material(s) to be selected so that the fluid container will be transparent, or at least translucent, so that a user may see the contents of the fluid container, or at least the level of drink fluid within the fluid container, through the walls, or wall structure, of the container. In some embodiments, it may be desirable for the material(s) to be selected so that the fluid container is rigid and resists being collapsed

when a user drinks from the container. In some embodiments, the material(s) may be selected so that the fluid container is designed to be collapsed (i.e., to permit opposing portions of the wall structure to be urged toward, or even into contact with, each other) during use. However, even fluid containers that are adapted to be collapsed during use, such as by a user squeezing the container, will tend to be at least semi-rigid in their construction and thereby adapted to be self-supporting. In some embodiments, the material(s) may be selected so that the fluid container is not breakable, i.e., will not shatter if dropped. Polyethylene will typically produce a collapsible fluid container that is translucent or opaque, but not transparent. Polycarbonate will typically produce a rigid, or stiff, fluid container that has a clear or glass-like appearance without the fragility of glass. Polypropylene will typically produce a fluid container that is more translucent and stiffer than polyethylene yet still able to be collapsed during use by a user squeezing the wall structure of the fluid container.

[**0038**] As indicated with respect to the illustrated examples of fluid containers shown in FIGS. **1-3**, container **12** includes a body **22** with a base, or bottom surface, **24** and a neck **26**, with the bottom surface and the neck being separated by wall structure **28**. As perhaps best seen in FIG. **3**, bottom surface **24** is adapted to support the drink bottle on a level surface. In other words, in the illustrative example, when the drink bottle is set upon a generally level surface, the bottom surface of the drink bottle will support the drink bottle in an upright configuration upon that surface. FIG. **3** also demonstrates that the bottom surface of the fluid container is not required to have a flat, or planar, configuration, although this configuration is within the scope of the present disclosure.

[**0039**] In the illustrated example shown in FIG. **2**, wall structure **28** has a contoured configuration, with the central region **30** of the wall structure being tapered, or defining a portion of the internal compartment that has a reduced cross-sectional area, relative to the corresponding upper and lower regions **32** and **34** of the wall structure. For example, the central region may be shaped to facilitate easier grasping of the drink bottle by a user. It is within the scope of the present disclosure that other configurations may be utilized. For example, the body may include a handle, or passage, that extends into, or through, the drink compartment. As another illustrative, non-exclusive example, the body may include a handle that projects outwardly from the wall structure. As yet another example, the wall structure may have a cylindrical or other geometrically shaped configuration. As shown in FIG. **1**, the container's wall structure **28** may have a generally cylindrical configuration. In the illustrated example, the upper region **32** of the wall structure has a tapered configuration relative to the central and lower regions **30** and **34** of the wall structure, and thereby has a smaller internal perimeter.

[**0040**] The cross-sectional configuration of the wall structural may be symmetrical throughout the upper, central, and lower regions, or at least one of the regions may have a cross-sectional configuration that is not symmetrical with the other regions and/or with respect to itself. For example, selectively shaping the cross-sectional configuration, or perimeter, of at least the central region may permit the drink bottle to be rotationally oriented by a user for drinking from the subsequently discussed bite-actuated valve assembly without requiring the user to look at the rotational position of the valve assembly relative to the user's hand that is holding the central region of the fluid container's wall structure. For example, and with reference to FIG. **2**, shaping the wall structure to have a depression or other unsymmetrical portion **36** on the central region of the wall structure generally beneath the bite-actuated mouthpiece may permit a user to grasp and orient the bottle for drinking from the mouthpiece simply by feeling the position of the unsymmetrical portion of the wall structure. However, this is but one of many suitable configurations and is not required. In FIGS. **1** and **2**, the wall structure includes gradations **38** to indicate the volume of fluid present in the container. As shown, the gradations are spaced-apart along the height of the fluid container to indicate or otherwise demarcate volumes of drink fluid. Gradations **38** provide another example of optional structure that may or may not be implemented in a particular embodiment without departing from the scope of the present disclosure.

[**0041**] Neck **26** provides an opening, or portal, through which drink fluid may be poured into the internal compartment of the fluid container and/or removed therefrom. Neck **26** will typically have a reduced cross-sectional area (or smaller perimeter) than the region of the fluid container from which it extends, although this configuration is not required. Neck **26** is adapted to interconnect, typically removably, with the cap assembly via any suitable mechanical interconnection, or coupling structure. In the illustrative example shown in FIG. **3**, neck **26** includes a portal **40** with a coupling structure **42** that includes threads **44** that are configured to be threadingly engaged by corresponding threads **46** on the base **70** of the cap assembly to permit the cap to be screwed, or threaded, onto the neck, such as shown in FIG. **3**. In the illustrative example shown in FIG. **3**, the cap assembly's threads **46** provide the coupling structure **45** of the base. It is within the scope of the present disclosure that coupling assembly **43** may be used to refer collectively to the coupling structures of the base and the neck, such as threads **44** and **46**.

[**0042**] Another example of a suitable coupling assembly **43** for interconnecting the cap assembly and the fluid container is shown in FIG. **4**. As shown, the cap assembly is configured to engage the neck with a coupling assembly **43** in the form of a friction fit assembly, with neck **26** including a coupling structure **42** that includes an external lip, or ledge, **48** over which a corresponding coupling structure **45** in the form of a flange, or internal ledge, **50** of the base of the cap assembly extends to couple the cap assembly onto the neck. Cap assembly **14** and/or neck **26** may form a fluid-tight seal therebetween without requiring the inclusion of gaskets, o-rings or seal-enhancing structure. However, it is also within the scope of the present disclosure that one or more such structures may be utilized.

[**0043**] As discussed, cap assembly **14** is connected, and typically removably connected, to the neck of the fluid container. By "removably connected," it is meant that the cap assembly is designed, or adapted, to be repeatedly connected to and disconnected from the neck of the fluid container without destruction of the cap assembly or the neck. When properly connected to the neck, the cap assembly forms a seal with the neck of the fluid container and thereby selectively seals the internal compartment of the container to prevent drink fluid from being dispensed there-

from through opening **40** except as permitted by the cap assembly. One or more of the cap assembly and the neck may include a compressible gasket or other sealing structure to assist in providing a water-tight seal between the cap assembly and the neck when the cap assembly is properly secured on the neck. When removed or otherwise disconnected from the fluid container, the cap assembly may be retained proximate the fluid container by a tether that interconnects the cap assembly and the fluid container to retain a connection between these components when the base of the cap assembly is not coupled to the neck of the fluid container. An optional tether is schematically illustrated in FIG. **4** at **52**. When present, the tether may be integrally formed with one or both of the cap assembly and the fluid container, or it may be coupled to the cap assembly and/or the fluid container via any suitable mechanism. It is also within the scope of the present disclosure that the cap assembly may not be coupled to the fluid container by a tether.

[**0044**] As discussed, and as somewhat schematically illustrated in FIG. **5**, cap assembly **14** includes a base **70**, which is adapted to interconnect with the neck of the fluid container. Cap assembly **14** further includes a mouthpiece, such as a bite-actuated mouthpiece **72**, which is adapted to selectively permit drink fluid to flow therethrough when the valve assembly is deformed from its closed configuration to a dispensing, or open, configuration. Cap assembly **14** further includes, or defines, a fluid conduit **74** though which drink fluid may selectively flow from the fluid container to the mouthpiece.

[**0045**] As discussed, base **70** is preferably configured to be removably coupled to the neck of the fluid container to seal the portal defined by the neck of the fluid container. In other words, a user may drink directly from the fluid container through opening **40** when the cap assembly is not secured to the neck by a suitable coupling structure. When cap assembly **14** is secured to the neck, then drink fluid may not be withdrawn from fluid container **12** other than as permitted by the cap assembly, such as via bite-actuated mouthpiece **72**. Base **70** forms a portion of coupling assembly **43**, with the base and the neck of the fluid container cooperating to secure the base upon the neck. In FIG. **5**, base **70** is shown including coupling structure **45** in the form of threads **46** that are configured to threadingly engage corresponding threads on the neck of a fluid container. As shown in FIG. **5**, base **70** also includes, or defines, an inlet **80** to the fluid conduit **74** through which drink fluid is selectively drawn from the fluid container and dispensed through bite-actuated mouthpiece **72**.

[**0046**] As discussed, cap assembly **14** defines a fluid conduit **74** that extends from the fluid container to the bite-actuated mouthpiece so that drink fluid from container **12** may be selectively dispensed through mouthpiece **72**. FIG. **5** graphically depicts that it is within the scope of the present disclosure that cap assembly **14** may include a mount **100** to which the bite-actuated mouthpiece is removably mounted, or secured, with the mount defining at least a portion of fluid conduit **74**, such as which may extend through a hollow passage **102** within the mount to a distal open end region **104** of the mount. When mount **100** includes a fluid passage through which drink fluid may at least selectively flow from the internal compartment of the fluid container to the mouthpiece, the mount may be referred to as a drink spout. In the illustrated example shown in FIG. **5**, mount **100** extends in a fixed orientation relative to base **70**, thereby defining the orientation of the mouthpiece **72** relative to the base (and fluid container) during use of the drink bottle. In FIG. **5**, the mount extends generally parallel to the central, or long, axis **106** of the cap assembly and corresponding drink bottle (i.e., straight away from the cap assembly). However, any suitable orientation may be used without departing from the scope of the present disclosure. This is graphically depicted in FIG. **6**, in which the mount is shown extending at an inclined angle relative to the long, or central, axis **106** of the cap assembly and corresponding drink bottle.

[**0047**] It is also within the scope of the present disclosure that mount **100** may be adjustably positionable relative to the base of the cap assembly, thereby permitting the orientation of the bite-actuated mouthpiece to be adjusted within a range of positions, or configurations, that are defined at least in part by the mount. This adjustable positioning of the mouthpiece, when provided for in a particular embodiment, may permit a user to adjust the orientation of the mouthpiece to a user-selected drinking orientation. An example of an adjustably positionable mount **100** is shown in dashed lines in FIG. **6**, in which the mount and attached mouthpiece are shown pivoted from the dispensing configuration shown in solid lines to a stowed configuration. In the stowed configuration, the mouthpiece is typically not positioned for being received into a user's mouth. As discussed in more detail herein, it is within the scope of the present disclosure that the cap assembly may include an optional valve or other fluid regulator that is adapted to prevent or otherwise restrict the flow of drink fluid to the mouthpiece when the mount is in a stowed configuration. In such an embodiment, when the mount is in the stowed configuration, drink fluid would be prevented from flowing from the fluid container through the mouthpiece regardless of the configuration of the mouthpiece.

[**0048**] Another illustrative example of a cap assembly **14** that includes a mount, or drink spout, **100** that is pivotal within a range of positions, or configurations, relative to the base of the cap assembly is shown in FIG. **7**. As shown, the cap assembly includes an adjustable joint **108**, which is somewhat schematically illustrated. As illustrative examples, the mouthpiece, and at least a portion of the mount, may be coupled to the base of the cap assembly by a joint (and/or valve) **108**, such as may take the form of a pivotal joint, a ball joint, or other suitable structure that provides for adjusting the angular and/or rotational orientation of the mount relative to the base of the cap assembly. When the cap assembly includes such a pivotal joint **108**, it is within the scope of the present disclosure that the joint may form a portion of the cap assembly's fluid conduit **74**, such as with the passage of the fluid conduit extending through the joint. However, this construction is not required to all embodiments. As a variation of this structure, the mount may include a hinged or other flexible region that permits selective adjustment of the orientation of the mount's distal open end region **104** relative to the inlet of the fluid conduit.

[**0049**] It is within the scope of the present disclosure that the mouthpiece is non-removably, or permanently, secured to the base, mount, or other portion of the cap assembly. However, in many embodiments it may be desirable for the

mouthpiece to be removably connected to the cap assembly, such as to permit the mouthpiece to be repeatedly removed, such as for cleaning or replacement, and thereafter recoupled to the mount. As non-exclusive, illustrative examples, the mouthpiece may be removably mounted onto mount **100** and/or with mount **100** being designed to be removed from base **70**.

[**0050**] Bite-actuated mouthpiece, or valve, **72** includes at least one opening through which drink fluid may flow when the mouthpiece is in its dispensing, or open configuration. An illustrative, non-exclusive example of a suitable construction for bite-actuated mouthpiece **72** is shown in FIGS. **10-15**. In the illustrated example, and perhaps best seen in FIGS. **10** and **14-15**, the mouthpiece includes a dispensing outlet, or opening, **86** that is defined by a slit **88** that extends through the dispensing face **90** of the mouthpiece. It is within the scope of the present disclosure that other configurations may be used, including two or more slits, intersecting or spaced-apart slits, etc. This range of optional configurations is schematically indicated in FIG. **11**, in which a pair of laterally spaced slits are shown in dashed lines at **88'**, and in which a second slit that intersects with slit **88** is shown in dash-dot lines at **88"**. The mouthpiece defines an internal chamber **110** into which drink fluid flows from the outlet, or end region, of the mount and to the opening formed by slit **88** when the mouthpiece is in a dispensing configuration. The sidewalls, or wall structure, **92** of the mouthpiece may be described as including one or more bite regions **112**, which refer to opposed regions upon which a user may bite or otherwise apply compressive forces to urge the mouthpiece from its closed configuration to a dispensing configuration.

[**0051**] As perhaps best seen in FIG. **10**, the illustrated example of a mouthpiece **72** has a non-symmetrical cross-sectional configuration between opposed regions of the mouthpiece's sidewalls **92**. By this it is meant that the illustrated mouthpiece has different dimensions transverse to the direction of fluid flow, depending upon whether the dimensions are measured transverse or parallel to the illustrated slit. It is within the scope of the present disclosure that other non-symmetrical or symmetrical configurations may be used. For example, mouthpiece **72** may have a circular cross-sectional configuration, amongst others.

[**0052**] Mouthpiece **72** is resilient and biased to its closed configuration, such as is shown in FIGS. **10-15**. In use, the mouthpiece is adapted to be configured to the dispensing configuration by a user placing the mouthpiece in the user's mouth and biting upon or otherwise compressing the appropriate portions of sidewalls **92** of the mouthpiece, such as bite regions **112**, to deform the mouthpiece to a position where the slit or other opening is no longer sealed and instead defines a fluid pathway through which drink fluid may flow. This is somewhat schematically depicted in FIG. **16** with another illustrative example of a suitable bite-actuated mouthpiece. As shown, the opposed lips, or sealing surfaces, **94** that define slit **88** are spread apart from each other to define opening **86**, through which drink fluid may be dispensed from the drink bottle. Mouthpiece **72** may be referred to as a self-sealing valve, or valve assembly, because the mouthpiece is constructed to automatically return to its closed, or sealed, configuration when the compressive forces, such as may be applied by a user's teeth or mouth, are no longer applied to maintain the mouthpiece in its dispensing configuration. Therefore, unless forces are being exerted to the mouthpiece to deform the mouthpiece to a dispensing configuration, the mouthpiece will be in its closed, or sealed, configuration.

[**0053**] The illustrated example also demonstrates that the region of the mouthpiece distal the dispensing face, which may be referred to as the base, or distal, portion of the mouthpiece and which is generally indicated at **113** in FIGS. **10** and **12-15** may have (but is not required to have) a contoured configuration that does not extend at a constant distance from the dispensing face. In the illustrative, non-exclusive example shown in FIGS. **12** and **13**, the base portion includes a pair of projecting regions **114** separated by a pair of concave regions **115**, although this construction is not required and other irregular base configurations may be utilized without departing from the scope of the present disclosure. Having a contoured or otherwise irregular configuration, when mounting on a dispensing spout or other mount that is complimentarily configured to receive and conform to such a configuration enables the mount to restrict relative rotation of the mouthpiece thereupon due to the engagement of the distal portion **113** of the mouthpiece with the mount, such as shown by referring back to FIGS. **1** and **2**. As discussed, the illustrated example is but a non-exclusive example of a suitable configuration, with it being within the scope of the present disclosure that the distal portion of the mouthpiece and/or the corresponding mount may have any suitable configuration for securing the mouthpiece upon the mount.

[**0054**] Additional illustrative, non-exclusive examples of suitable configurations for bite-actuated, self-sealing mouthpieces **72** for use with drink containers according to the present disclosure are shown in FIGS. **17-20**. In FIGS. **17-20**, the mouthpieces are shown positioned on a mount **100** that extends into a neck region **116** of the mouthpiece and terminates at an end region **104**. Also shown are optional stops, or internal projections, **118** that are adapted to engage the end region **104** of the mount to define the fully inserted position of the mount within the mouthpiece. The illustrative portions of mount **100** define portions of fluid conduit **74** which extends from the end region, or outlet, **104** of the mount and into the internal chamber **110** of the mouthpiece.

[**0055**] Additional illustrative examples of suitable bite-actuated mouthpieces, including external and internal constructions of which that may be selectively utilized (in whole or in part) with mouthpieces **72** according to the present disclosure are disclosed in U.S. Pat. Nos. 6,070,767 and 6,032,831, the complete disclosures of which are hereby incorporated by reference for all purposes. In the illustrated examples, mouthpiece **72** has a narrower head portion than the mouthpieces disclosed in the incorporated patents, but any of the illustrated configurations may be utilized. Similarly, the internal construction of the incorporated mouthpieces may be utilized with mouthpiece **72**, such as the internal configurations for the mouthpiece's face and/or sidewalls. For example, at least FIGS. **14** and **15** illustrate that mouthpieces **72** may, but are not required to, include internal discontinuities, such as internal corners or edges, that extend along the sidewalls away from the dispensing face and which may assist in the mouthpiece deforming to its open configuration and/or returning to a sealed configuration.

[0056] In the preceding discussion, mouthpiece **72** has been described as a bite-actuated mouthpiece. As also discussed, in some embodiments, the fluid container will be formed from a material that configures, or permits, the wall structure of the fluid container to be collapsed inwardly as a user squeezes the fluid container. This intentional reduction in the internal volume of the fluid container may urge drink fluid through the fluid conduit and expel the fluid through the bite-actuated mouthpiece. It is within the scope of the present disclosure that mouthpiece **72** may be configured to permit this additional method of dispensing drink fluid from the drink bottle.

[0057] A potential benefit of the bite-actuated mouthpiece being biased to its closed configuration is that a user may position the drink bottle (and mouthpiece) to a desired drinking orientation, and even a partially or completely inverted orientation, without drink fluid being dispensed from the mouthpiece. When the user desires to drink from the positioned drink bottle, the user may bite upon the mouthpiece (and/or optionally squeeze a fluid container that is designed to be collapsed during use) to commence the flow of drink fluid through the mouthpiece to the user.

[0058] As discussed, bite-actuated mouthpiece **72** is biased to a closed, or sealed, configuration in which the opening that is formed in the dispensing face of the mouthpiece is closed and prevents drink fluid from passing therethrough. Therefore, unless the mouthpiece is reconfigured from its closed configuration to a dispensing configuration, drink fluid is prevented from being dispensed through the cap assembly's fluid conduit. In some embodiments, it may be desirable for the cap assembly to further include a flow-restricting, or on/off, valve in addition to the bite-actuated mouthpiece. For example, because the mouthpiece is designed to be configured to its dispensing configuration when lateral external forces are imparted to the mouthpiece (such as when a user bites upon or otherwise compresses the sidewalls of the mouthpiece toward each other), it is possible that external forces may be inadvertently exerted upon the mouthpiece. Should this occur, drink fluid may be dispensed through the mouthpiece. However, the inclusion of an optional manual on/off valve, which selectively restricts whether drink fluid may flow to the mouthpiece from the fluid container, may prevent this unintentional dispensing of drink fluid regardless of the configuration of the mouthpiece. A graphical example of a drink bottle according to the present disclosure that includes an on/off, or shutoff, valve and a bite-actuated mouthpiece **72** is shown in FIG. **8**. In FIG. **8**, the on/off valve is indicated in dashed lines at **120** to graphically represent that the on/off valve, when present, may be located at any suitable position downstream (i.e., toward the internal compartment of the fluid container) of the mouthpiece's face, and typically proximate or upstream (i.e., toward the mouthpiece's dispensing face) from the inlet of the fluid conduit **74**.

[0059] The on/off valve is selectively configured between open and closed configurations independent of the configuration of the bite-actuated mouthpiece. When the on/off valve is in its closed configuration, it is adapted to obstruct at least a portion of the fluid conduit, and optionally to completely obstruct the fluid conduit, thereby preventing drink fluid from passing from the fluid container to the face of the bite-actuated mouthpiece. Therefore, when the on/off valve is in its closed configuration, drink fluid cannot be dispensed from the fluid container through the mouthpiece, regardless of the configuration of the bite-actuated mouthpiece. As such, the on/off valve may also be referred to as a shutoff valve. When the on/off valve is in its open configuration, the drink fluid is selectively dispensed from the fluid container through the mouthpiece depending upon the configuration of the bite-actuated mouthpiece.

[0060] Unlike bite-actuated mouthpiece **72**, the on/off valve will typically not be biased to return automatically to a particular configuration. Instead, the on/off valve may be configured to remain in a user-selected orientation until reconfigured to a different orientation by a user. In such an embodiment, the on/off valve may be referred to as being a static valve, in that it only restricts flow of drink fluid through the fluid conduit when positively configured to do so by a user. The on/off valve may utilize any suitable actuation mechanism to selectively configure the valve between its open and closed configurations.

[0061] As an illustrative, non-exclusive example, the joint **108** illustrated in FIG. **7** may be configured to provide an on/off valve **120** when pivoting of the mount relative to the cap assembly selectively causes the fluid conduit through the cap assembly to mouthpiece **72** to be obstructed. For example, at least a portion of the fluid conduit may be obstructed as the distal end of the mount is pivoted toward the cap assembly. In some embodiments, such as when the fluid conduit extends through the joint, the degree to which the corresponding portion of the fluid conduit is obstructed may vary depending upon the degree to which the mount is pivoted or otherwise moved toward the cap assembly. In such an embodiment, the fluid conduit may not be obstructed by the joint or other on/off valve in at least one position (and optionally a sub-range of positions) within the range of positions within which the mount may be oriented relative to the cap assembly, the portion of the fluid conduit may be partially obstructed during another sub-range of the range of positions, and the portion of the fluid conduit may be completely obstructed in at least one (and optionally a third sub-range of positions) within the range of positions. It is also within the scope of the present disclosure that a similar range and sub-ranges may be provided by other embodiments of on/off valve **120**. However, this construction is not required to all drink bottles according to the present disclosure.

[0062] An illustrative, non-exclusive example of a suitable configuration for an on/off, or shutoff, valve is shown in FIGS. **26** and **27**, in which the on/off valve is generally indicated at **120**. As shown, mount **100** is pivotally coupled to base **70** of the cap assembly to selectively restrict and permit drink fluid to flow from the fluid container to the fluid conduit. In at least FIGS. **26** and **27**, mount **100** may be described as providing a drink spout that is pivotally coupled to the base of the cap assembly. The drink spout is selectively pivoted between a stowed, or closed, configuration (such as shown in FIG. **26**) and a dispensing, or extended, configuration (such as shown in FIG. **27**), in which the drink spout is pivoted generally away from the base of the cap assembly relative to the closed configuration. In the closed configuration, the drink spout is pivoted toward or even against the base of the cap assembly relative to the dispensing configuration. In the illustrated example, the fluid conduit between the internal compartment of the drink container and the mouthpiece of the cap assembly is blocked by the

drink spout when the drink spout is in its closed configuration, thereby restricting (or preventing) drink fluid from being dispensed through the drink spout regardless of the configuration of the mouthpiece when the drink spout is in the closed configuration. In the dispensing configuration, pivoting of the drink spout away from the base aligns an aperture in the drink spout to establish a continuous fluid conduit from the internal compartment to the mouthpiece.

[**0063**] Another example of a suitable actuation mechanism for an on/off valve **120** that may be used with drink bottles **10** according to the present disclosure is a push-pull mechanism, in which the bite-actuated mouthpiece and typically at least a portion of the mount and/or fluid conduit is urged away from a baffle or other obstruction that selectively prevents drink fluid from passing through the mount or other portion of the fluid conduit to the internal chamber of the mouthpiece. For example the push-pull mechanism may, in its closed configuration, prevent drink fluid from entering the inlet of the fluid conduit until the mouthpiece and other corresponding structure is drawn away from the obstruction. As another example, the push-pull mechanism that provides an on/off valve may selectively restrict drink fluid from passing through an intermediate portion of the fluid conduit (such as within the mount), and/or from exiting the mount into the internal compartment of the mouthpiece. In a variant of this push-pull mechanism, the obstruction is selectively pushed or otherwise urged away from the inlet or other suitable portion of the fluid conduit to permit drink fluid to flow therethrough.

[**0064**] Yet another illustrative example of a suitable construction for a static on/off valve **120** is a rotatable mechanism, in which a portion of the fluid conduit upstream from the internal chamber of the mouthpiece (such as the inlet, outlet, or an intermediate portion of the mount) is selectively obstructed until the mouthpiece (and typically at least a portion of the mount and/or fluid conduit) is rotated to a position in which the obstruction no longer prevents drink fluid from passing through the fluid conduit. Yet another illustrative, non-exclusive example of a suitable actuation mechanism for a static on/off valve **120** utilizes a fluid conduit having a foldable, collapsible, resiliently deformable, and/or crimpable region and suitable structure for selectively folding, flattening, resiliently deforming, and/or crimping that region of the fluid conduit to block, obstruct, or otherwise restrict the flow of drink fluid therethrough. This region may define a portion of the fluid conduit through which drink fluid may selectively flow from the inlet to the mouthpiece. An illustrative, non-exclusive example of a suitable material for such a portion of the fluid conduit is silicone or another material that does not readily take a compression set and therefore may be repeatedly folded, flattened, crimped, and the like without leaking or otherwise being permanently deformed or failing.

[**0065**] The schematic example of an on/off, or shutoff, valve **120** that is depicted in FIG. **8** is intended to graphically represent these and any other suitable constructions for a static on/off valve that selectively prevents drink fluid from being dispensed from the drink bottle through the opening of the mouthpiece regardless of the configuration of the mouthpiece. Additional examples are presented in the provisional patent applications that are incorporated by reference herein.

[**0066**] Drink bottles **10** according to the present disclosure may, but are not required to, additionally or alternatively include an air return, or pressure relief, assembly that is adapted to selectively permit air from external the drink bottle to enter the drink bottle's internal compartment other than through the dispensing opening of the mouthpiece. When present, the air return assembly is preferably positioned sufficiently away from the dispensing face of the mouthpiece that the air return valve is not obstructed when a user is drawing drink fluid from the fluid container through the opening of the mouthpiece. Especially when the fluid container has a rigid construction that is not adapted to readily collapse as drink fluid is drawn therefrom, a vacuum will tend to be drawn within the fluid container as drink fluid is withdrawn therefrom through the mouthpiece. As this vacuum, or pressure-differential, increases, it will become more difficult for a user to draw additional drink fluid through the mouthpiece until this pressure differential is reduced.

[**0067**] A schematic example of a drink bottle **10** according to the present disclosure that includes an air return assembly is shown in FIG. **9**, with the air return assembly generally indicated at **160**. Air return assembly **160** is adapted to permit air from external the drink bottle to enter the internal compartment **20** of fluid container **12** without having to pass through the drink bottle's mouthpiece **72** (or least the dispensing face **90** or opening **86** of the mouthpiece). It is within the scope of the present disclosure that the air return assembly may be implemented on the cap assembly, such as on base **70** of the cap assembly. It is also within the scope of the present disclosure that the air return assembly, when present, may be implemented on the fluid container and/or that the drink bottle may be formed without an air return assembly that is separate from the bite-actuated mouthpiece. It is also within the scope of the present disclosure that an air return valve may be integrally formed with the bite-actuated mouthpiece or that it may be separately formed from the mouthpiece. When separately formed from the mouthpiece, the air return assembly may be positioned in a spaced-apart relationship to the mouthpiece on the cap assembly, on a dispensing mount (or nozzle) **100**, on the fluid container, etc.

[**0068**] Air return assembly **160** may define an air conduit **162** through which air may flow at least from external the drink bottle to the internal compartment of the drink container. In FIG. **9**, the conduit is schematically illustrated including an inlet **164**, through which air may enter the conduit from external the drink container, and an outlet **166**, through which air in the conduit may pass to the interior of the drink bottle, such as to the internal compartment of the drink container.

[**0069**] In embodiments of drink bottles **10** that include an air return assembly **160**, the air return assembly may, but is not required to, include at least one air return valve, such as is schematically illustrated in FIG. **9** at **168** and which is less schematically illustrated in the subsequently discussed FIGS. **25-29**. Air return valve **168** is adapted to selectively restrict the flow of air through the air conduit from external the drink bottle and/or to restrict the flow of drink fluid through the air conduit from internal the drink bottle. Air return valve **168** is adapted to be selectively configured between a closed, or sealed, configuration in which the flow of air into the internal compartment through the air return assembly from external the drink bottle is restricted, and an open, or actuated, configuration, in which the air return

valve is at least partially displaced from its sealed configuration and in which air may flow through the air return assembly, such as from external the drink bottle into the internal compartment of the fluid container. This flow of air may be through an air conduit, such as conduit **162**, or may be simply through an opening in the drink bottle that is selectively obstructed by the air return valve. Air return valve **168** preferably has a relatively low actuation pressure for permitting air to be drawn from external the drink bottle into the drink bottle's internal compartment, while also having a relatively high resistance to drink fluid being able to pass through the valve from within the internal compartment. In other words, the air return valve is preferably constructed to resist fluid flow through the valve from internal the compartment. Similar to bite-actuated mouthpiece **72**, the air return valve is preferably a resilient valve that is biased to a closed configuration in which the valve is sealed and thereby prevents air or other fluid from passing therethrough. As discussed, the air return valve may be designed to be configured to an actuated, or open, configuration responsive to more than a predetermined pressure differential existing between the drink bottle's internal compartment and the environment external the drink bottle.

[**0070**] Air return valve **168** may include any suitable structure for selectively permitting air to enter the internal compartment of the drink bottle, preferably while also restricting drink fluid from exiting the internal compartment through the air return valve. As an illustrative, non-exclusive example, the air return valve may be a pressure-differential valve that is adapted to selectively permit air to flow into the drink container's internal compartment while restricting the flow of fluid through the air conduit from the internal compartment to exterior of the drink bottle. An illustrative, non-exclusive example of a suitable construction for air return valve **168** is an umbrella, or diaphragm valve, although other suitable valves may be used, including other suitable self-sealing valves. Another illustrative example of a suitable structure is a "duck bill" configuration, in which the valve assembly projects internally into the internal compartment and includes lips that are adapted to spread apart from each other to define a passage through which air may be returned into the internal compartment of the drink bottle, but which are biased together to resist drink fluid passing from the internal compartment through the passage. Further examples include valves having one or more slits, including intersecting slits. When a self-sealing valve (i.e., a valve that is biased to a sealed configuration) is utilized, the seal may be provided by abutting surfaces of the valve itself and/or by the valve sealing against a portion of the drink bottle.

[**0071**] It is within the scope of the present disclosure that drink containers that include an air return assembly **160** may alternatively not include any form of physical valve that restricts the flow of fluid through the air conduit. In some embodiments, the air return assembly may include an air conduit that is obstructed on at least one of its ends (internal the fluid container or external the fluid container) when the drink bottle is not being used, such as when a pivotal dispensing nozzle is pivoted to a closed configuration. Air return assembly **160** is preferably positioned so that its air conduit is not obstructed by a user's mouth when the drink bottle is used to dispense drink fluid to a user.

[**0072**] FIG. **9** also graphically depicts that drink bottles **10** according to the present disclosure may, but are not required to, include an optional straw **180** that extends from the cap assembly into the fluid container, such as to (or at least proximate) the lower region of the fluid container. Straw **180** enables a user to draw drink fluid from the drink container via mouthpiece **72** without having to tip the drink bottle so that drink fluid may flow into the fluid conduit **74**. For example, as the size of the fluid container increases, users may be more likely to want to draw drink fluid from the drink bottle without having to lift and tilt the drink bottle to the generally horizontal or even inverted configuration that would be used if straw **180** was not present. Straw **180** may be removably (or permanently) coupled to a corresponding mount **182** on the cap assembly, such as at or proximate the inlet **80** of fluid conduit **74**. A benefit of a removable straw structure **180** is that a user may selectively attach or remove the straw structure from the cap assembly, such as depending upon the desired use of the drink bottle at a given time. As discussed, it is also within the scope of the present disclosure that the straw may be fixedly, or permanently, attached to the cap assembly. As used herein, "removably,""removably coupled," and "removably attached" refer to structures that are designed to be repeatedly connected and disconnected without destruction of the corresponding structures. Similarly, fixedly connected or permanently coupled structures refer to structures that are not designed to be separated without destruction of at least a portion of the structures and/or the mechanism that joins the structures.

[**0073**] FIG. **9** also illustrates that drink bottles **10** according to the present disclosure may, but are not required to, include (or be selectively used with) elongate, flexible drink tubes, or external straw structures, **190** that fluidly interconnect the bite-actuated mouthpiece with mount **100** or another suitable receiver on cap assembly **14**. It is within the scope of the present disclosure that any of the drink bottles disclosed, illustrated, and/or incorporated herein may be selectively utilized with an elongate drink tube **190**. A potential benefit of this optional construction is that a user may draw drink fluid from the drink bottle without having to hold the drink bottle. Although it is within the scope of the present disclosure that the drink tube may be integrated with or otherwise permanently secured to one or both of the cap assembly or the bite-actuated mouthpiece, it may be desirable for each of these components to be removably coupled to the drink tube. For example, this permits the drink bottle to be used with the mouthpiece connected directly to the cap assembly (such as to mount **100**) or to be connected to the cap assembly by drink tube **190**. In FIG. **9**, an optional mount **192** is shown interconnecting the drink tube with mount **100**, such as with the end region thereof), although it is within the scope of the present disclosure that the drink tube may be coupled directly to an end of the mount, such as by extending the corresponding end of the drink tube within or over an end of the mount. After attachment to the mount, the drink tube may optionally be described as forming an extension of the fluid conduit **74** of the drink bottle. When drink bottles according to the present disclosure include an elongate drink tube, such as tube **190**, it is also within the scope of the present disclosure that the downstream assembly defined by the drink tube and mouthpiece may optionally include one or more quick-connect assemblies and/or flow-regulating devices and accessories, such as disclosed in U.S. Pat. No. 6,908,015 and U.S. patent

applications Ser. Nos. 10/617,879 and 10/666,856, the complete disclosures of which are hereby incorporated by reference herein for all purposes.

[0074] The previously discussed FIGS. **7-9** schematically illustrate a variety of components and structures that may (but are not required to be) incorporated into drink bottles according to the present disclosure. It is within the scope of the present disclosure that these components and structures, when present, may have any suitable structure meeting the functional criteria set forth herein and may be implemented individually or in combination with others of these or other components and structures.

[0075] FIGS. **21-27** show a less schematic example of a suitable cap assembly **14** that may be used with drink bottles **10** according to the present disclosure. The example shown in FIGS. **21-27** includes non-exclusive examples of various ones of the previously discussed components and structures. However, it is with the scope of the present disclosure that other components and/or structures may be utilized in place of or in addition to the illustrated components and structures. Accordingly, the depicted example is not intended to require the selected examples and combination of components and structures. Instead, it is intended to provide an illustrative, non-exclusive example of a suitable construction for cap assemblies according to the present disclosure. The other components, structures, and variants thereof that are illustrated, described and/or incorporated herein may be selectively utilized with the illustrated cap assembly without departing from the scope of the present disclosure. Similarly, the illustrated cap assembly may be used with any of the drink bottles described, illustrated, and/or incorporated herein, as may the other cap assemblies and/or mouthpieces described, illustrated and/or incorporated herein.

[0076] In the example shown in FIGS. **21-27**, the cap assembly includes a base **70** from which a mount, or drink spout, **100** extends. The mount is pivotally coupled to the base of the cap assembly and is selectively pivoted within a range of positions relative to the base of the cap assembly. In FIGS. **21**, **23**, and **26**, the mount is shown in a stowed configuration, while in FIGS. **22**, **24-25** and **27**, the mount is shown in illustrative dispensing configurations within the range of positions. The dispensing configurations of the mount may also be described as deployed and/or ready-to-drink configurations. The cap assembly includes a bite-actuated mouthpiece **72** that is mounted on mount **100** and is in fluid communication therewith. The illustrative mouthpiece includes a dispensing face **90** having a self-sealing opening **86** through which drink fluid may be selectively dispensed when the mount and mouthpiece are both in dispensing configurations.

[0077] In the illustrative example shown in FIGS. **21-27**, the mount includes an optional flange, or lever arm, **122** that projects from the mount and provides a surface that may be grasped or otherwise suitably engaged by a user, such as by a user's finger or thumb, to draw the mouthpiece and its mount from the stowed configuration toward, or to, a ready-to-drink configuration. Flange **122** may optionally be utilized with any of the other pivotal (or otherwise selectively stowable) mounts that are described, illustrated and/or incorporated herein.

[0078] The illustrative example of a cap assembly **14** shown in FIGS. **21-27** also includes a handle **140** that extends from the base of the cap assembly. Handle **140** may take any other suitable form, may have a rigid or flexible construction, and may be (but is not required to be) used with any of the other cap assemblies that are disclosed, illustrated and/or incorporated herein. When present, handle **140** may, but is not required to, define a closed perimeter, or boundary, **142** through which a lanyard, karabineer, belt, strap, user's finger, or other structure may extend to hold and/or retain the drink bottle in a selected position. It is within the scope of the present disclosure that this closed boundary is perhaps best seen in FIG. **25**. The closed boundary may be defined entirely by the handle or that it may be defined by the handle and the base of the cap assembly. Regardless, the closed boundary refers to a closed perimeter around an opening through which an object may be inserted, such as to position or coupled to the drink container. Additionally or alternatively, when the drink bottle includes a tether than interconnects the cap assembly and the fluid container, the tether may also define (when the cap assembly is properly mounted on the fluid container) a (or another) closed boundary through which a strap or other securing or positioning structure may extend.

[0079] FIG. **25** also illustrates a non-exclusive example for a suitable pivotal mounting mechanism for mount **100**, with the mount including lateral projections **150** that are received into sockets **152** defined by portions of the base **70** and handle **140** of the cap assembly. The projections are rotatable within the sockets, and thereby function as rotatable supports, or axles, upon which the mount and any attached mouthpiece may be pivotally moved relative to the base of the cap assembly, such as between stowed and dispensing configurations and/or otherwise within the previously discussed range of positions. This illustrative mounting configuration is intended to provide a non-exclusive example of a suitable configuration, and it is within the scope of the present disclosure that other configurations may be utilized.

[0080] In the illustrated example, and as indicated in FIGS. **21-22** and **25**, the handle also provides guards **144** that are positioned to protect the bite-actuated mouthpiece from unintentional contact and/or exposure at least when the mouthpiece is in its stowed configuration. In the illustrated example, handle **140** provides a pair of lateral guards **146** that extend on opposing sides of the mouthpiece, as well as a dispensing face guard, or cover, **148** that is adapted to protect the dispensing face of the bite-actuated mouthpiece when the mouthpiece is in its stowed configuration. For example, guard **148** may provide a form of dust cover that protects the dispensing face, and thus the slit or other opening formed therein, from being contacted by dirt, grime, and other substances when the mouthpiece is in its stowed configuration. As handle **140** is itself optional and thereby not required to all embodiments of drink bottles according to the present disclosure, it follows that handle **140**, when present, may be formed with only one or more of the illustrated guards, with one or more additional guards, and/or without any guards.

[0081] In FIGS. **26** and **27**, the internal structure of the cap assembly shown in FIGS. **21-25** is shown in more detail. For example, the illustrated cap assembly includes a coupling structure **45** in the form of threads **46**. As discussed, any other suitable coupling structures may be utilized without departing from the scope of the present disclosure. FIGS. **26**

and **27** provide a graphical illustration of a pivotal mount **100** that defines a portion of fluid conduit **74** and therefore may be referred to as a drink spout through which drink fluid may selectively flow from the drink container, through an inlet **80** of the fluid conduit defined by the cap assembly, and thereafter through an outlet **104** of the mount into the internal chamber **110** of the bite-actuated mouthpiece **72**. When the mouthpiece is urged to a dispensing configuration, such as by a user biting upon the mouthpiece, the drink fluid may be dispensed through the self-sealing opening **86** in the mouthpiece.

[**0082**] The illustrated example of a cap assembly **14** includes a manual on/off valve, or shutoff valve, **120** that is defined at least in part by the mount. As shown in FIG. **26**, fluid conduit **74** is obstructed by a portion of the body **154** of the mount when the mount is in a stowed configuration. As shown with consideration of FIGS. **26** and **27**, the mount's body includes an inlet **156** that is selectively aligned in fluid communication with the inlet **80** of the fluid conduit. In FIG. **26**, the mount is in a stowed configuration and the fluid inlet to the mount is not aligned in fluid communication with the inlet of the fluid conduit. As such, drink fluid is prevented from flowing from the fluid container and through the fluid conduit to the mouthpiece. Therefore, drink fluid from the fluid container will not be dispensed through the fluid conduit and mouthpiece regardless of the configuration of the mouthpiece. When the mount is pivoted to a dispensing configuration, such as shown in FIG. **27**, drink fluid may flow through the entire fluid conduit. FIGS. **26** and **27** include an optional gasket, or sealing member, **158**. As illustrated, the gasket takes the form of a compressible o-ring, but any other suitable structure may be utilized when sealing member **158** is included in cap assembly **14**.

[**0083**] In FIGS. **26** and **27**, the inlet **80** of the fluid conduit is defined by an optional mount **182** for an internal straw that may be selectively attached to the mount. When attached, the inlet for the fluid conduit would be defined by the distal end of the straw. When mount **182** is not present, the inlet to the fluid conduit may be defined by a portion of the cap assembly beneath the mount, or optionally, by the fluid inlet to the mount itself.

[**0084**] FIGS. **26** and **27** also provide a graphical example of a cap assembly **14** that includes an air return assembly **160**. In the illustrative, non-exclusive example, the air return assembly includes an air return valve **168** that has an umbrella valve configuration, in which the valve assembly includes an internally deflectable flap or perimeter region **170** that is biased to seal against a region **172** of the underside (or other suitable portion) of the cap assembly that contains an aperture or other passage or conduit **162** through which air may selectively flow when the air return valve is in a open, or deflected configuration.

[**0085**] FIGS. **28** and **29** generally correspond to the cap assembly shown in FIGS. **26** and **27**. FIGS. **28** and **29** provide a graphical demonstration that cap assemblies **14** that include an on/off valve **120** may implement the shutoff mechanism with structure other than the structure shown in FIGS. **26** and **27**. For example, in FIGS. **28** and **29**, the on/off valve includes a flexible tube, or conduit **124** that in FIG. **28** fluidly interconnects the inlet **80** of the fluid conduit with the internal chamber **110** of the mouthpiece. However, when the mount is pivoted to a stowed configuration, such as shown in FIG. **29**, the body **154** of the mount engages the tube and collapses or otherwise compresses or crimps the tube to obstruct the fluid conduit, thereby preventing the flow of drink fluid from the fluid container, through the fluid conduit, and out of the mouthpiece, regardless of the configuration of the mouthpiece. As the mount is pivoted from the stowed configuration shown in FIG. **29** to a dispensing configuration, such as the illustrative configuration shown in FIG. **28**, the constrictive pressure applied by the body of the mount is correspondingly reduced, and a fluid flow path through the fluid conduit is reestablished.

INDUSTRIAL APPLICABILITY

[**0086**] The drink bottles and drink containers of the present disclosure are applicable to the hydration fields, and are specifically applicable to portable bottles and similar containers from which users may selectively drink potable drink fluid.

[**0087**] It is believed that the disclosure set forth above encompasses multiple distinct inventions with independent utility. While each of these inventions has been disclosed in its preferred form, the specific embodiments thereof as disclosed and illustrated herein are not to be considered in a limiting sense as numerous variations are possible. The subject matter of the inventions includes all novel and non-obvious combinations and subcombinations of the various elements, features, functions and/or properties disclosed herein. Similarly, where the claims recite "a" or "a first" element or the equivalent thereof, such claims should be understood to include incorporation of one or more such elements, neither requiring nor excluding two or more such elements.

[**0088**] It is believed that the following claims particularly point out certain combinations and subcombinations that are directed to one of the disclosed inventions and are novel and non-obvious. Inventions embodied in other combinations and subcombinations of features, functions, elements and/or properties may be claimed through amendment of the present claims or presentation of new claims in this or a related application. Such amended or new claims, whether they are directed to a different invention or directed to the same invention, whether different, broader, narrower, or equal in scope to the original claims, are also regarded as included within the subject matter of the inventions of the present disclosure.

We claim:

1. A drink container, comprising:

a rigid fluid container having a fluid container base adapted to support the fluid container in an upright configuration, wherein the fluid container further includes a neck with an opening and a wall structure extending between the neck and the fluid container base; wherein the fluid container defines an internal compartment sized to hold a volume of potable drink fluid;

a cap assembly removably coupled to the fluid container to cover the opening, the cap assembly comprising:

a cap assembly base removably coupled to the neck of the fluid container;

a drink spout extending in a fixed orientation relative to the cap assembly base and having an outlet, wherein the drink spout defines at least a portion of a fluid conduit for drink fluid to flow from the fluid container through the drink spout; and

a self-sealing bite-actuated mouthpiece fluidly coupled to the drink spout and including a sealable opening through which drink fluid may be selectively dispensed from the fluid container to a user, wherein the mouthpiece is selectively configured between a closed configuration, in which the mouthpiece is adapted to prevent drink fluid from being dispensed therethrough, and a dispensing configuration, in which the mouthpiece is adapted to permit drink fluid to be dispensed therethrough, wherein the mouthpiece is adapted to be configured from the closed configuration to the dispensing configuration responsive to compressive forces applied thereto, and further wherein the mouthpiece is biased to automatically return from the dispensing configuration to the closed configuration.

2. The drink container of claim 1, wherein the fluid container is adapted to hold 12-36 fluid ounces of drink fluid.

3. The drink container of claim 1, wherein the cap assembly is threadingly coupled to the neck of the fluid container, and further wherein the drink container is at least substantially formed from at least one of polycarbonate and polypropylene.

4. The drink container of claim 1, wherein the wall structure of the fluid container includes an upper region, a central region, and a lower region, and further wherein the upper region is tapered and has a smaller internal perimeter than at least one of the central region and the lower region.

5. The drink container of claim 1, wherein the mouthpiece includes opposed bite regions, and further wherein the mouthpiece is adapted to be configured from its closed configuration to its dispensing configuration responsive to compressive forces being applied to the bite regions to urge the bite regions toward each other.

6. The drink container of claim 1, wherein the sealable opening includes at least one elongate slit.

7. The drink container of claim 1, wherein the outlet of the drink spout extends into the mouthpiece.

8. The drink container of claim 1, wherein the mouthpiece defines an internal mouthpiece chamber into which drink fluid may flow from the outlet of the drink spout and from which drink fluid may flow to the opening of the mouthpiece.

9. The drink container of claim 1, wherein the mouthpiece includes a dispensing face through which the sealable opening extends, and further wherein the mouthpiece includes a mouthpiece base portion having a contoured configuration with respect to the dispensing face.

10. The drink container of claim 1, wherein the mouthpiece includes a dispensing face through which the sealable opening extends, and further wherein the mouthpiece includes a mouthpiece base portion with a pair of projecting regions separated by a pair of concave regions.

11. The drink container of claim 1, wherein the cap assembly further includes a handle that projects from the base of the cap assembly, and further wherein the handle defines a closed perimeter with the base.

12. The drink container of claim 1, wherein the drink container further includes a manual on/off valve that is adapted to selectively restrict the flow of drink fluid from the fluid container to the opening of the mouthpiece regardless of the configuration of the mouthpiece.

13. The drink container of claim 12, wherein the fluid conduit includes an inlet through which drink fluid may selectively flow from the fluid container and to the mouthpiece, and further wherein the on/off valve is adapted to selectively prevent drink fluid from flowing through the fluid conduit from the inlet to the mouthpiece.

14. The drink container of claim 13, wherein the drink spout forms at least a portion of the on/off valve.

15. The drink container of claim 1, wherein the cap assembly further includes an air return assembly adapted to selectively permit air from external the fluid container to enter the internal compartment of the fluid container.

16. The drink container of claim 15, wherein the air return assembly is spaced-apart from the opening of the mouthpiece.

17. The drink container of claim 15, wherein the air return assembly includes an air return valve.

18. The drink container of claim 15, wherein the air return assembly includes an air return passage through which air may selectively flow and an air return valve that is adapted to selectively obstruct the passage to prevent air from flowing therethrough.

19. The drink container of claim 18, wherein the air return valve is further adapted to prevent drink fluid from flowing from the internal compartment of the fluid container through the air return passage.

20. The drink container of claim 1, wherein the drink container further includes an elongate internal straw that extends from the cap assembly into the internal compartment of the fluid container.

21. The drink container of claim 20, wherein the base of the cap assembly includes a mount, and further wherein the internal straw is adapted to be removably coupled to the mount.

22. The drink container of claim 1, wherein the drink container further includes an elongate drink tube, and further wherein the elongate drink tube fluidly couples the mouthpiece to the drink spout.

23. The drink container of claim 22, wherein the drink tube is a flexible drink tube.

24. The drink container of claim 22, wherein the drink tube is removably coupled to the drink spout and the mouthpiece.

25. The drink container of claim 24, wherein the mouthpiece is adapted to be fluidly coupled directly to the drink spout upon removal of the drink tube from the mouthpiece and the drink spout and insertion of at least a portion of the drink spout into the mouthpiece.

26. A drink container, comprising:

a fluid container having a fluid container base adapted to support the fluid container in an upright configuration, wherein the fluid container further includes a neck with an opening and a wall structure extending between the neck and the fluid container base; wherein the fluid container defines an internal compartment sized to hold a volume of potable drink fluid, wherein the fluid container is adapted to hold at least 12-36 fluid ounces of drink fluid;

a cap assembly coupled to the fluid container to cover the opening, the cap assembly comprising:

a cap assembly base threadingly coupled to the neck of the fluid container;

a drink spout extending in at least a defined orientation relative to the cap assembly base and having an outlet, wherein the drink spout defines at least a portion of a fluid conduit for drink fluid to flow from the fluid container through the drink spout;

a handle that projects from the base of the cap assembly; and

a self-sealing bite-actuated mouthpiece fluidly coupled to the drink spout and including a sealable opening through which drink fluid may be selectively dispensed from the fluid container to a user, wherein the mouthpiece is selectively configured between a closed configuration, in which the mouthpiece is adapted to prevent drink fluid from being dispensed therethrough, and a dispensing configuration, in which the mouthpiece is adapted to permit drink fluid to be dispensed therethrough, wherein the mouthpiece is adapted to be configured from the closed configuration to the dispensing configuration responsive to compressive forces applied thereto, and further wherein the mouthpiece is biased to automatically return from the dispensing configuration to the closed configuration, wherein the mouthpiece includes opposed bite regions, and further wherein the mouthpiece is adapted to be configured from its closed configuration to its dispensing configuration responsive to compressive forces being applied to the bite regions to urge the bite regions toward each other; wherein the sealable opening includes at least one elongate slit; wherein the outlet of the drink spout extends into the mouthpiece; wherein the mouthpiece includes a dispensing face through which the sealable opening extends.

27. The drink container of claim 26, wherein the fluid container is a self-supporting container having a container base adapted to support the fluid container in an upright orientation on a level surface, wherein the fluid container is at least substantially formed from at least one of polycarbonate and polypropylene, wherein the wall structure of the fluid container includes an upper region, a central region, and a lower region, and further wherein the upper region is tapered and has a smaller internal perimeter than at least one of the central region and the lower region.

28. The drink container of claim 26, wherein the at least a defined orientation relative to the cap assembly base is a single fixed orientation relative to the cap assembly base.

29. The drink container of claim 26, wherein the at least a defined orientation relative to the cap assembly base includes a range of orientations relative to the cap assembly base.

30. The drink container of claim 26, wherein the at least a defined orientation relative to the cap assembly base is a range of pivotal orientations relative to the cap assembly base.

31. The drink container of claim 26, wherein the mouthpiece defines an internal mouthpiece chamber into which drink fluid may flow from the outlet of the drink spout and from which drink fluid may flow to the opening of the mouthpiece.

32. The drink container of claim 26, wherein the mouthpiece includes a mouthpiece base portion with a pair of projecting regions separated by a pair of concave regions.

* * * * *