(19) Korea Intellectual Property Office (KR)
(12) Utility Model Registration Gazette (Y1)

(51) Int. Cl.[7]
B65D 77/28

(45) Publication Date July 22, 2002
(11) Registration No. 20-0282506
(24) Registration Date July 5, 2002

(21) Application No. 20-2002-0012272
(22) Application Date April 23, 2002

(73) Right Holder PARK, Joo Hong
1-102, Sangil Woosung Town, 174 (38/1), Sangil-dong, Gangdong-gu, Seoul
(72) Inventor PARK, Joo Hong
1-102, Sangil Woosung Town, 174 (38/1), Sangil-dong, Gangdong-gu, Seoul
(74) Agent HAN, Yong Joon

Examiner: SUH, Shin Taek
Request for Technical Evaluation: No

(54) Portable water bottle with a straw

Abstract

The present invention relates to a portable water bottle with a straw for easy drinking of water by automatically protruding a straw built into the water bottle when a cover formed on the lid is opened by pressing an operation button formed on the lid of the water bottle with one touch, and by automatically inserting the straw when the opened cover is closed, making it easy to carry and store.

The invention consists of: an operating chamber 10 that is formed to be upwardly opened in the lid 110 of the water bottle 100 and has in its center an upwardly and downwardly connecting discharge hole 11; an operating button 30 installed on the front surface of the operating chamber 10 and elastically installed by a spring 31 at the rear, moves forward and backward, and has a hook 32 and a stopper 33 formed on the upper surface; a cover 20 that is axially coupled to a rotary shaft 21 in the operating chamber 10 and is opened and closed using this as a support point, and that is integrally formed on the lower surface with a protrusion 22 and a bracket 23 for engaging and disengaging the hook 32 of the operating button 30; and a straw 40 that is axially coupled to the bracket 23 by a hinge shaft 24 and rotates with this as a support point, and that is connected to the bendable discharge hole 11 by a connecting hose 41 having a certain elasticity.

Representative drawing

FIG. 2

Indexing Terms

Trove Brands Ex. 1006
IPR Petition - USP 10,165,879

Water bottle, Portable water bottle, Water container, Container, Container for liquid storage, Water bottle with a straw

Specification

Brief Description of Drawings

FIG. 1 is a perspective view showing an overall configuration according to the present invention.

FIG. 2 is an in-use state diagram in which the straw protrudes from FIG. 1.

FIG. 3 is an exploded perspective view showing the main part of the lid in FIG. 2.

FIG. 4 is a cross-sectional view of FIG. 2.

FIG. 5 is a state diagram in which the cover is closed, and a straw is stored.

FIG. 6 is an in-use state diagram in which the straw protrudes before the cover is opened.

FIG. 7 is an in-use state diagram showing the process of closing the cover.

<Description of symbols for main parts of the drawings

100: Water bottle 101: Inlet

102: Loop 110: Lid

10: Operating chamber 11: Discharge hole

12: Guide hose 20: Cover

21: Rotary shaft 22: Protrusion

23: Bracket 24: Hinge shaft

30: Operating button 31: Spring

32: Hook 33: Stopper

40: Straw 41: Connecting hose

42: Sliding protrusion

Detailed description of the invention

Purpose of the invention

Technology to which the invention belongs and the prior art in the field

Trove Brands Ex. 1006
IPR Petition - USP 10,165,879

The present invention relates to a portable water bottle with a straw, and more in detail to a portable water bottle with a straw which, when an operating button formed on a lid of the water bottle is pressed in a one-touch manner, a cover formed on the lid is opened and a straw built into the water bottle is automatically protruded to facilitate drinking water, and when the opened cover is closed, the straw is automatically inserted to facilitate carrying and storage.

In general, various water bottles for carrying and storing water or beverages have been proposed and are widely used, and it has been proposed that such water bottles have a straw that allows water to be safely drunk without spilling outwardly.

The use of water bottles with straws is gradually increasing because they have many advantages such as being easy to carry and store, and adults, as well as infants and children, being able to easily carry them while traveling, hiking, exercising, or in various workplaces, and being able to easily drink the contents without the need for a separate cup.

An example of a water bottle with a straw that is known so far is the utility model registration No. 181029 (application No. 97-16228).

In this case, a hemispherical protrusion is formed on the upper part of a lid for opening and closing a water bottle, and at the same time, an insertion groove is formed along the curved surface of the protrusion, a through-hole is formed on the upper part of the insertion groove to which a soft straw is fastened, and a guide hose is installed on the lower surface of the through-hole to extend into the water bottle.

Furthermore, a cover is installed on the protrusion, which is opened and closed using a hinge shaft as a supporting point, and is configured to open and close the insertion groove formed on the protrusion of the lid.

Therefore, when the cover is opened to one side, the straw compressed by the cover is vertically extruded by its own elasticity, so that the user can easily and conveniently drink the water in the water bottle without holding the straw by hand and in contrast, when the cover is closed to its original position when carrying and storing the water bottle, the cover compresses the straw and inserts it into the insertion groove.

At this time, as the straw compressed as described above is formed with soft material, it seals the through-hole formed in the lid, thereby preventing the water in the water bottle from leaking out.

However, in such a prior art configuration, the straw is configured to be extruded by the opening and closing operation of the cover formed on the lid, so that the elasticity of the straw deteriorates during long-term use, making it difficult to achieve the expected effect.

In other words, not only did the elasticity of the straw deteriorate, which prevented the straw from protruding vertically when used, causing inconvenience in use, but also, since the soft straw was configured to close the water outlet passage when folded, the straw was bent each time, causing intensive damage to the bending area, resulting in water leakage.

In addition to these problems, there was also a problem that the cover that is fastened to the lid is simply configured to open and close with the hinge shaft as a supporting point, so it was not smooth to open and close, such as opening easily while carrying.

Technical problem solved by the invention

The present invention has been made in consideration of the various prior art problems described above, and its object is to provide a portable water bottle with a straw that is not only easy to manufacture due to its simple structure by simply pressing the operating button formed on the lid in a one-touch manner so that the cover is opened and the straw is released, but also highly hygienic because it is easy to drink water without holding a straw by hand, and that also improves usability and structure by having a straw embedded in it by simply closing the cover in a one touch manner.

In order to achieve these objectives, the present invention consists of a water bottle for storing a certain amount of water and a lid for opening and closing the water bottle and an inlet of the water bottle, wherein on the lid an operating chamber is formed having a discharge hole in the center from which the contents are discharged, and at the same time, the operating chamber comprises a cover member which is opened and closed by a hinge shaft as

Trove Brands Ex. 1006
IPR Petition - USP 10,165,879

a supporting point, and on the lower surface of the cover member a straw connected to the discharge hole by a soft connecting hose and movable by the hinge shaft is formed, wherein the cover member is characterized in that it is configured to be locked and unlocked by an operating button elastically installed by a spring in the front surface of the operating chamber of the lid, so that when the cover member is opened by the pressing operation of the operating button, the straw is brought out to facilitate drinking water, and on the other hand, when the cover member is closed, the straw is embedded by the locking of the operating button.

Composition and operation of the invention

Hereinafter, the composition and operation of the present invention will be described in detail with reference to the accompanying drawings.

In FIG. 1 and FIG. 2 of the accompanying drawings, which illustrate the overall appearance of the present invention, the symbol 100 represents a water bottle capable of holding a suitable amount of water, and the symbol 110 represents a lid operable for opening and closing by being screwed onto an inlet 101 of the water bottle 100.

The water bottle 100 has an inlet 101 formed in the upper part so that the lid 110 can be opened to refill water, and a loop (102) is formed on the outer circumference of the upper part to which a belt or the like is fastened for easily carrying the water bottle 100.

The lid 110 is screwed to the inlet 101 of the water bottle 100 to open and close, and an operating chamber 10 that opens upwardly is formed on the upper one side of the lid 110, and at the same time, a discharge hole 11 that is connected upward and downward is formed at a predetermined position thereof, and a separate cover 20 is screwed into the operating chamber 10 to be opened and closed within the operating chamber 10.

At this time, a separate guide hose 12 is fastened to the lower discharge hole 11 of the lid 110 in the form of being stored in the water bottle 100 to provide a function of guiding the discharge of the water in the water bottle 100 to the upper side.

The operating chamber 10 is opened and closed by a cover 20 while providing sufficient storage space for the straws to be mentioned later to be stored therein, and a locking means is provided on the front surface for locking and unlocking the cover 20 when it is opened and closed.

The locking means comprises an operating button 30 fastened at the front surface of the operating chamber 10, and this operating button 30 is elastically installed by a spring 31 and is configured to be moved forward and backward, and a hook 32 is formed at a predetermined position on the upper part for locking and unlocking the cover 20, and at the same time, on the upper part at the rear end with a stopper 33 protruding to limit the operating range.

In other words, the operating button 30 is elastically installed by the spring 31 at the front end of the operating chamber 10 and is always moved forward by the elastic force thereof to maintain the operating standby state.

Furthermore, the cover 20 is axially coupled in the operating chamber 10 by a rotary shaft 21 and is opened and closed using the shaft as a supporting point, and a protrusion 22 is formed at the lower part of the front surface which is engaged with a hook 32 of the aforementioned operating button 30, and a bracket 23 is integrally formed at the lower center and axially coupled with a separate straw 40 using a hinge shaft 24.

The straw 40 is axially coupled to the bracket 23 of the cover 20 by the hinge shaft 24, which is freely rotatable using the shaft as a supporting point, and is connected to the discharge hole 11 formed in the center of the lid 110 by a connecting hose 41 of a certain elastic and flexible soft material.

Since the connecting hose 41 is formed of a flexible soft material and has a certain elasticity, it always tries to unfold vertically, and when the lid 20 is opened, its elastic force causes the straw 40 to protrude, and when the lid 20 is closed, it accommodates this by bending.

In addition, the connecting hose 41 at both ends is connected to the discharge hole 11 of the cover 20 and the lower surface of the straw 40, so that the water in the water bottle 100 is guided to the straw 40 side through the guide hose 12 by the suction force through the straw 40.

Trove Brands Ex. 1006
IPR Petition - USP 10,165,879

Furthermore, the undescribed symbol 42 in the drawings indicates a sliding protrusion for smooth guidance of the straw 40 when it is introduced into the operating chamber 10.

Therefore, the present invention configured in this way, can be conveniently carried by having drinkable water or various beverages in the water bottle 100, and when stored and carried, it is stored and carried with the cover 20 closed, as shown in FIG. 1 and FIG. 5 of the accompanying drawings.

In such a state, when the user wishes to drink the contents of the water bottle 100, the operating button 30 formed on the front surface of the lid 110, as shown in FIG. 4 and FIG. 6 of the accompanying drawings, is pressed, and the operating button 30 is reciprocated by compressing the rear spring 31.

As a result, the hook 32 formed on the front side of the operating button 30 is disengaged from the protrusion 22 of the cover 20, and at this moment, the cover 20 is unfolded by the elastic force of the connecting hose 41 and is opened with the rotary shaft 21 as a supporting point.

As described above, the moment the cover 20 is opened, the straw 40, which is axially coupled to the bracket 23 of the lower part by the hinge shaft 24, is also unfolded by the elastic force of the connecting hose 41, so that the straw 40 maintains an angle that is most convenient for the user to suck into the mouth.

Thus, when the straw 40 is sucked into the mouth, the contents of the water bottle 100 are directed through the guide hose 12 and the connecting hose 41, and out the straw 40, and the contents can be safely drunken.

On the contrary, when the cover 20 is closed, a protrusion 22 formed on the lower surface of the cover 20 is coupled with the hook 32 of the operating button 30 and inserted and fastened into the operating chamber 10.

In the process of closing the cover 20 using the rotation shaft 31 as the supporting point, as shown in FIG. 7 of the accompanying drawings, the straw 40 is firstly slidingly operated by contacting a sliding protrusion 42 formed on its front surface with a certain inclination with the upper hook 32 of the operating button 30, and at the same time, it is pivoted using the hinge shaft 24 as the supporting point and is securely accommodated into the operating chamber 10.

At this time, the connecting hose 41 is double bent as shown in FIG. 5 of the drawings to completely close the discharge passage of the connecting hose 41.

Thus, when the cover 20 is inserted and fastened into the operating chamber 10 formed on the upper part of the lid 110, the straw 40 is not only stored and safely protected in the operating chamber 10, but also awaits the next operation, and the contents of the water bottle 10 are completely prevented from leaking out to the outside by the double bending of the connecting hose 41.

Meanwhile, the present invention can be carried in a separate case, or a separate belt can be fastened to a loop 102 formed on the outer circumference of the water bottle 100 to facilitate portability.

Effect of the invention

As described in detail above, the present invention not only has the advantage of promoting convenience of use but also has the advantage of being highly hygienic since the contents can be conveniently and easily drunk without holding the straw by hand by forming a cover member that is opened and closed by an operating button formed on the lid part of the water bottle, and at the same time, configuring the straw to be ejected according to the opening and closing operation of the cover member.

In other words, the straw is automatically protruded by pressing the operation button, which makes it easy to drink the water in the water bottle, and on the other hand, the straw is safely stored inside only by the operation of closing the cover member, which is the advantage of being very convenient and hygienic.

In particular, the present invention not only has the advantage of being easy to manufacture due to its simple configuration, but also has the advantage of effectively storing and carrying various beverages as well as drinking water.

Trove Brands Ex. 1006
IPR Petition - USP 10,165,879

(57) Claims

Claim 1

A portable water bottle of which a lid at an inlet is provided with a straw, characterized in that it consists of:

an operating chamber 10 formed to be opened upward in a lid 110 of the water bottle 100 and having a discharge hole 11 in the center connected upward and downward;

an operating button 30 installed on the front surface of the operating chamber 10 and elastically installed by a spring 31 at the rear, moving forward and backward, and having a hook 32 and a stopper 33 formed on the upper surface;

a cover 20 axially coupled to a rotary shaft 21 in the operating chamber 10 and is opened and closed using this as a supporting point, and integrally formed on the bottom surface with a protrusion 22 and a bracket 23 for engaging and disengaging the hook 32 of the operating button 30; and

a straw 40 axially coupled to the bracket 23 by a hinge shaft 24 and rotates with this as a supporting point and connected to the discharge hole 11 by a bendable connecting hose 41 having a certain elasticity.

Drawings

FIG. 1

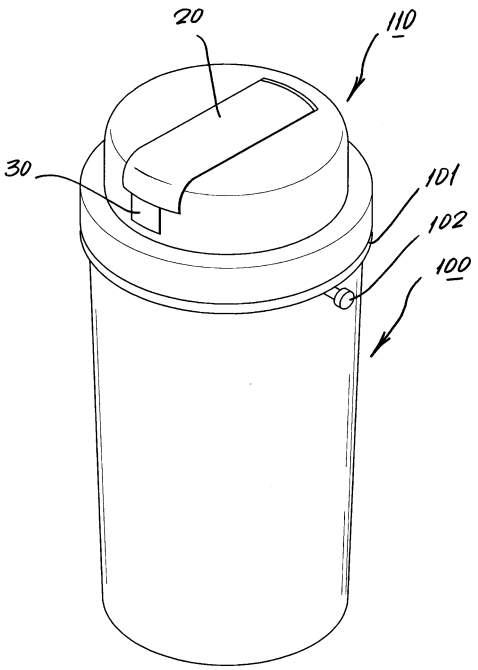

Trove Brands Ex. 1006
IPR Petition - USP 10,165,879

FIG. 2

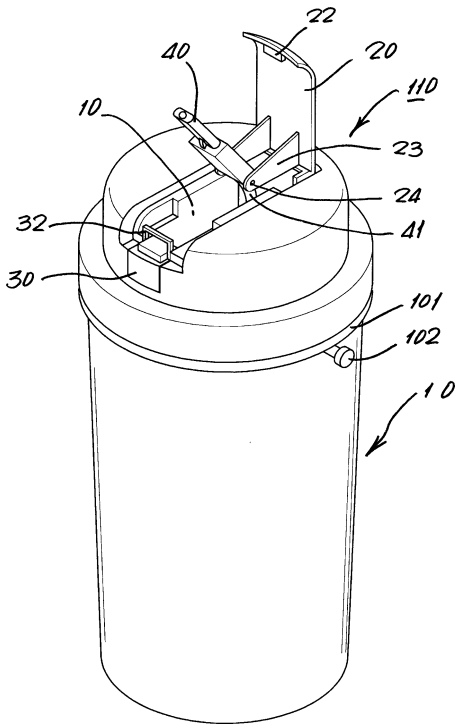

FIG. 3

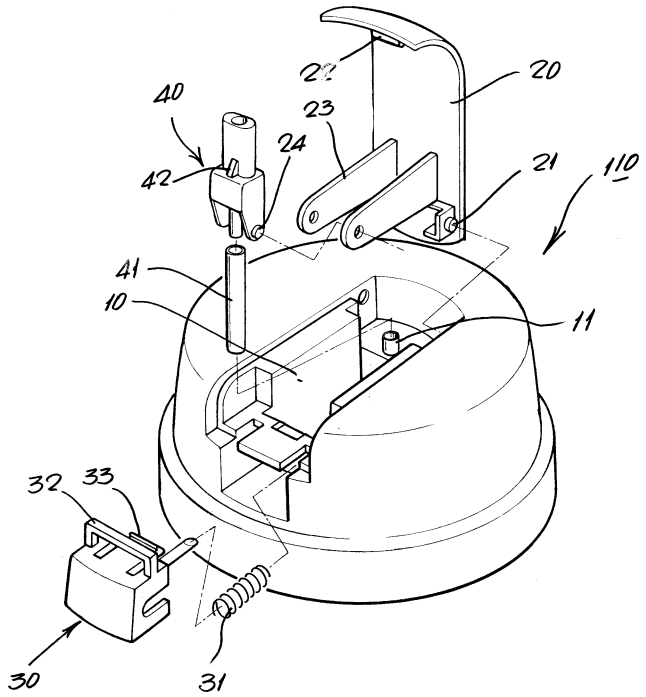

FIG. 4

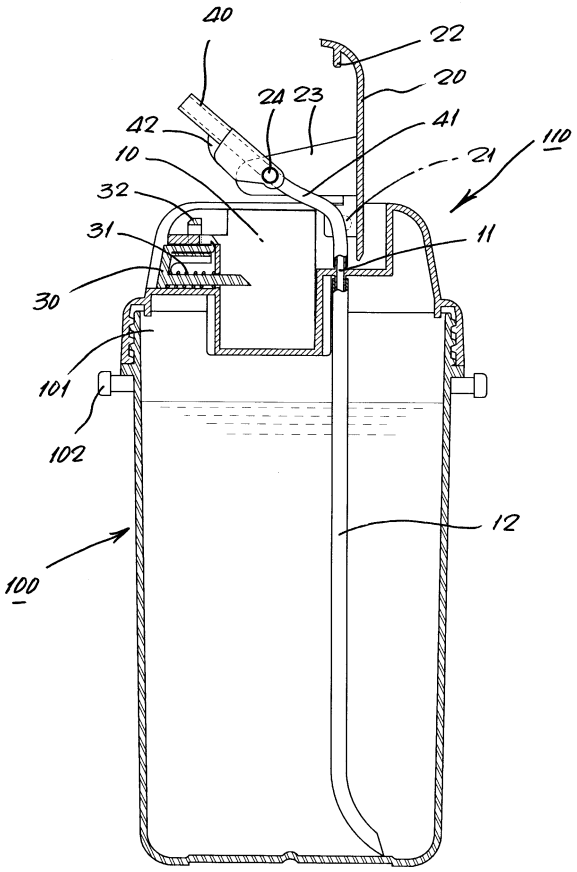

FIG. 5

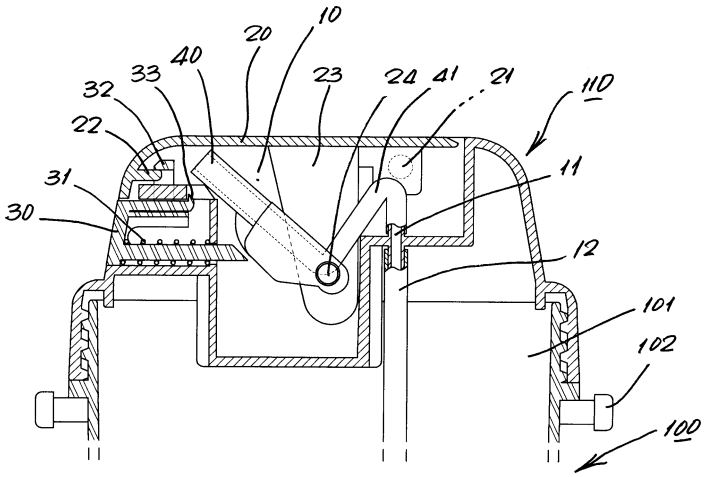
10
20
40
33
32
22
23
24
41
21
110
11
31
30
12
101
102
100

FIG. 6

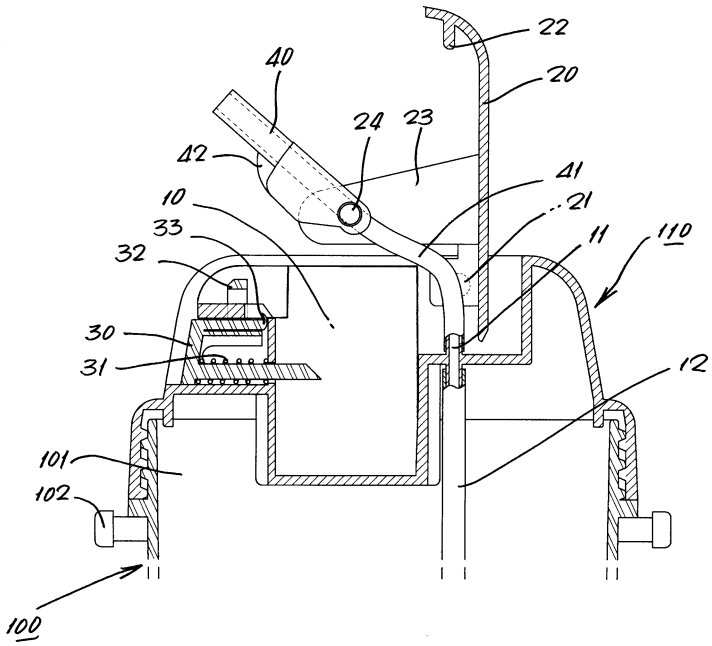
22
20
40
24
23
42
41
21
10
33
11
110
32
30
31
12
101
102
100
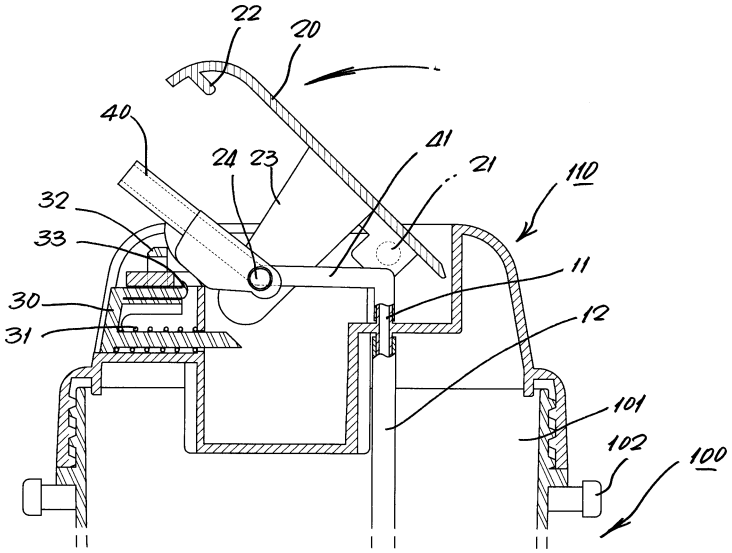
FIG. 7