US006081205A

United States Patent [19]

Williams

[11] **Patent Number: 6,081,205**

[45] **Date of Patent: Jun. 27, 2000**

[54] **ELECTRONIC PARKING METER AND ELECTRIC AUTOMOBILE RECHARGING STATION**

[76] Inventor: **Douglas J. Williams**, 25940 Coloretti Ct., Valencia, Calif. 91355

[21] Appl. No.: **08/320,382**

[22] Filed: **Oct. 11, 1994**

Related U.S. Application Data

[63] Continuation-in-part of application No. 07/885,338, May 19, 1992, abandoned.

[51] **Int. Cl.**[7] **B60Q 1/48**

[52] **U.S. Cl.** **340/932.2**; 235/381; 235/384

[58] **Field of Search** 235/381, 384; 340/932.2

[56] **References Cited**

U.S. PATENT DOCUMENTS

3,900,092	8/1975	Page	235/384 X
4,050,063	9/1977	Schull	235/382
4,163,215	7/1979	Iida	235/382
4,532,418	7/1985	Meese et al.	235/381
4,861,971	8/1989	Chan	235/384
4,866,661	9/1989	de Prins	235/382
4,993,627	2/1991	Phelan et al.	235/382
5,166,680	11/1992	Ganot	235/384
5,231,272	7/1993	Mardon	235/382
5,260,551	11/1993	Wiik	235/382
5,407,049	4/1995	Jacobs	235/384 X

Primary Examiner—Harold I. Pitts

Attorney, Agent, or Firm—Kelly Bauersfeld Lowry & Kelley, LLP

[57] **ABSTRACT**

An electric vehicle recharging parking meter includes a parking meter, a processor, a display interconnected to the processor for giving visual information to a user, and an input device interconnected to the processor. The input device enables the user to select the parking time and/or the recharging time for the electric vehicle. The processor is responsive to the user selection of recharge time, parking time, and recharge power requirements entered on the input device. A payment receptor for receiving payment for the parking and recharge time selected by the user is interconnected to the processor for indicating receipt of payment for parking time and recharge electricity. The processor enables a switch to close so that power will be supplied to the vehicle from a power source. A connector is attached to a post or stand on this the meter may be mounted whereby the electric vehicle can be interconnected to the power source. A power controller, operable in response to signals from the processor, is interconnected between the power source and the connector.

17 Claims, 5 Drawing Sheets

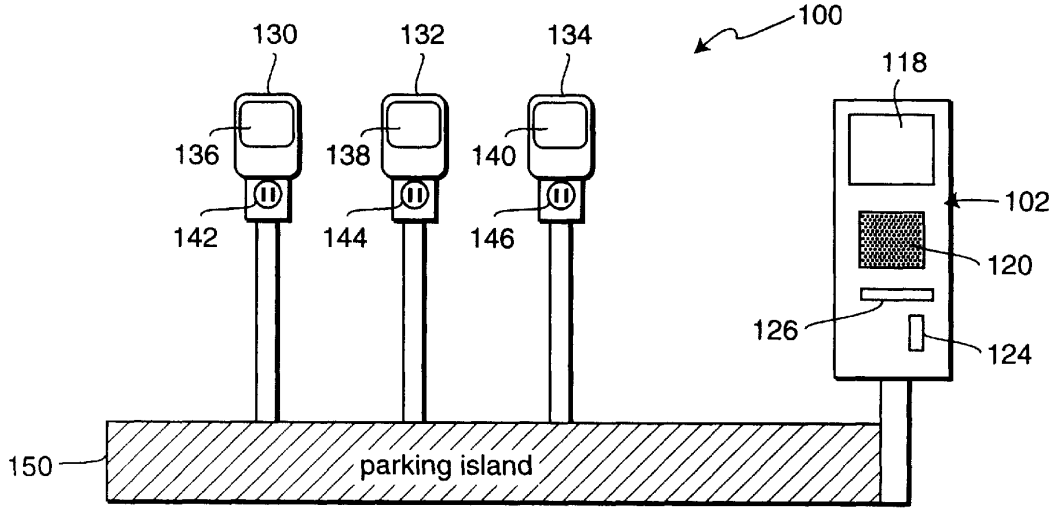

FIG. 1

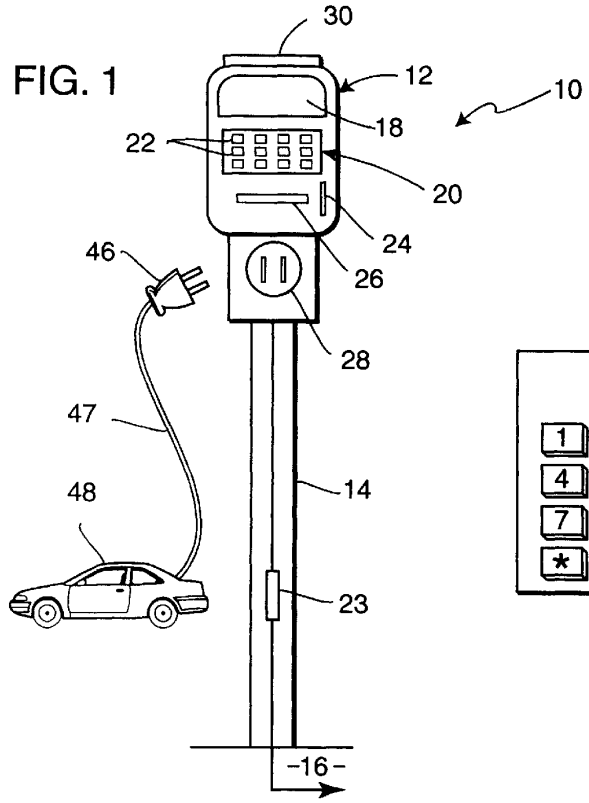

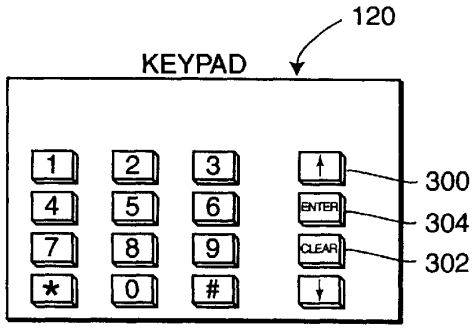

FIG. 5

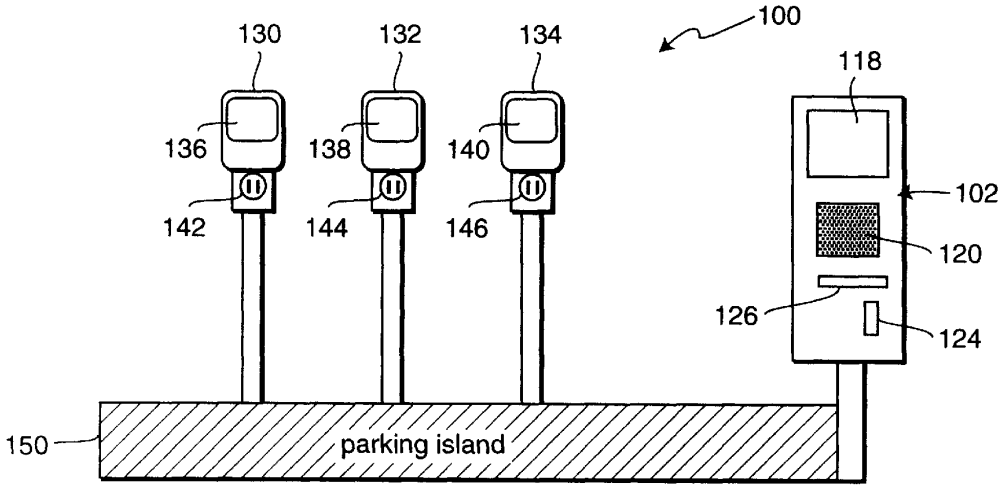

FIG. 3

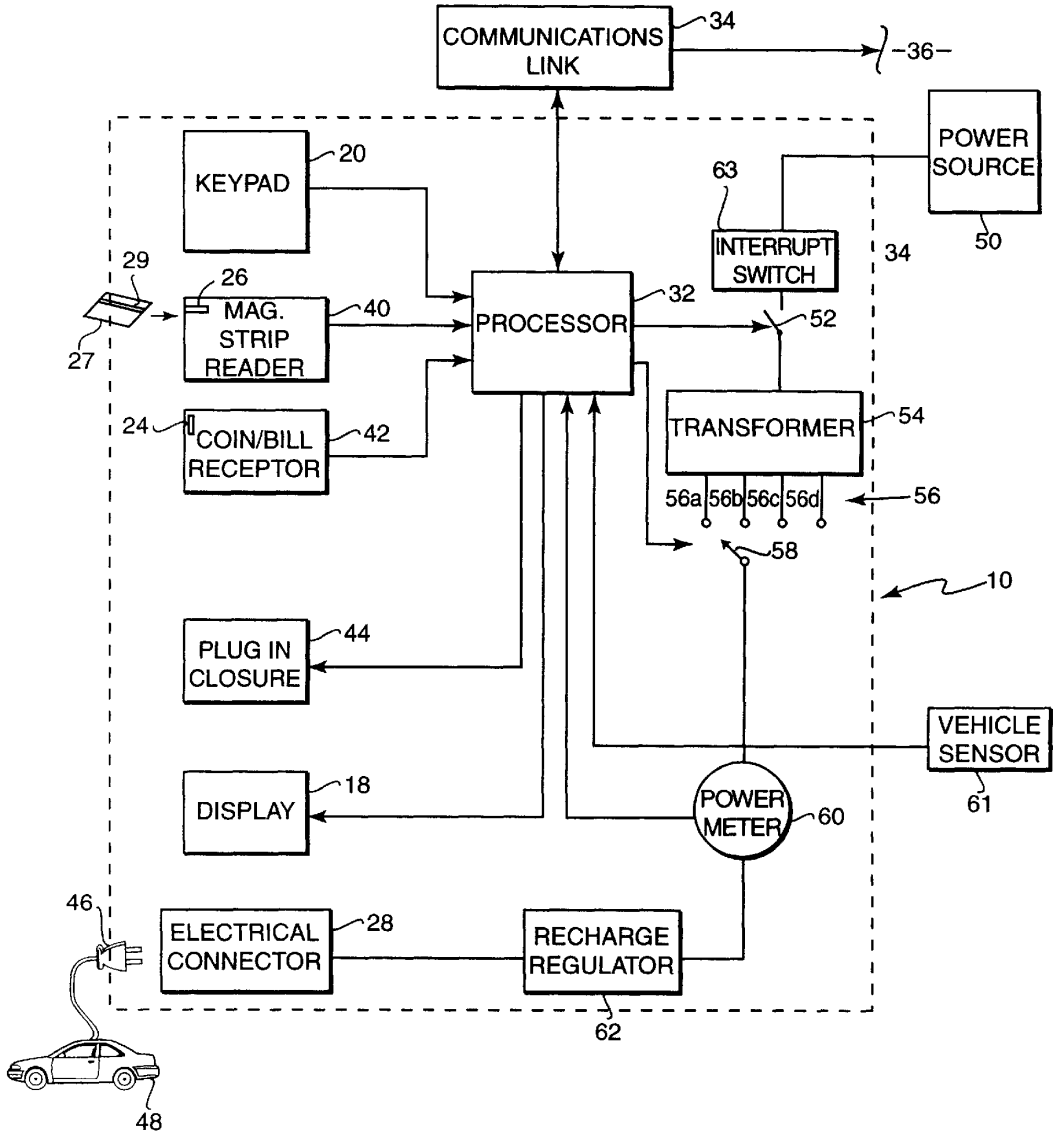
COMMUNICATIONS LINK
34
36
POWER SOURCE
50
KEYPAD
20
63
INTERRUPT SWITCH
34
29
26
MAG. STRIP READER
40
PROCESSOR
32
52
27
24
COIN/BILL RECEPTOR
42
TRANSFORMER
54
56a
56b
56c
56d
56
58
10
PLUG IN CLOSURE
44
VEHICLE SENSOR
61
DISPLAY
18
POWER METER
60
46
ELECTRICAL CONNECTOR
28
RECHARGE REGULATOR
62
48

FIG. 2

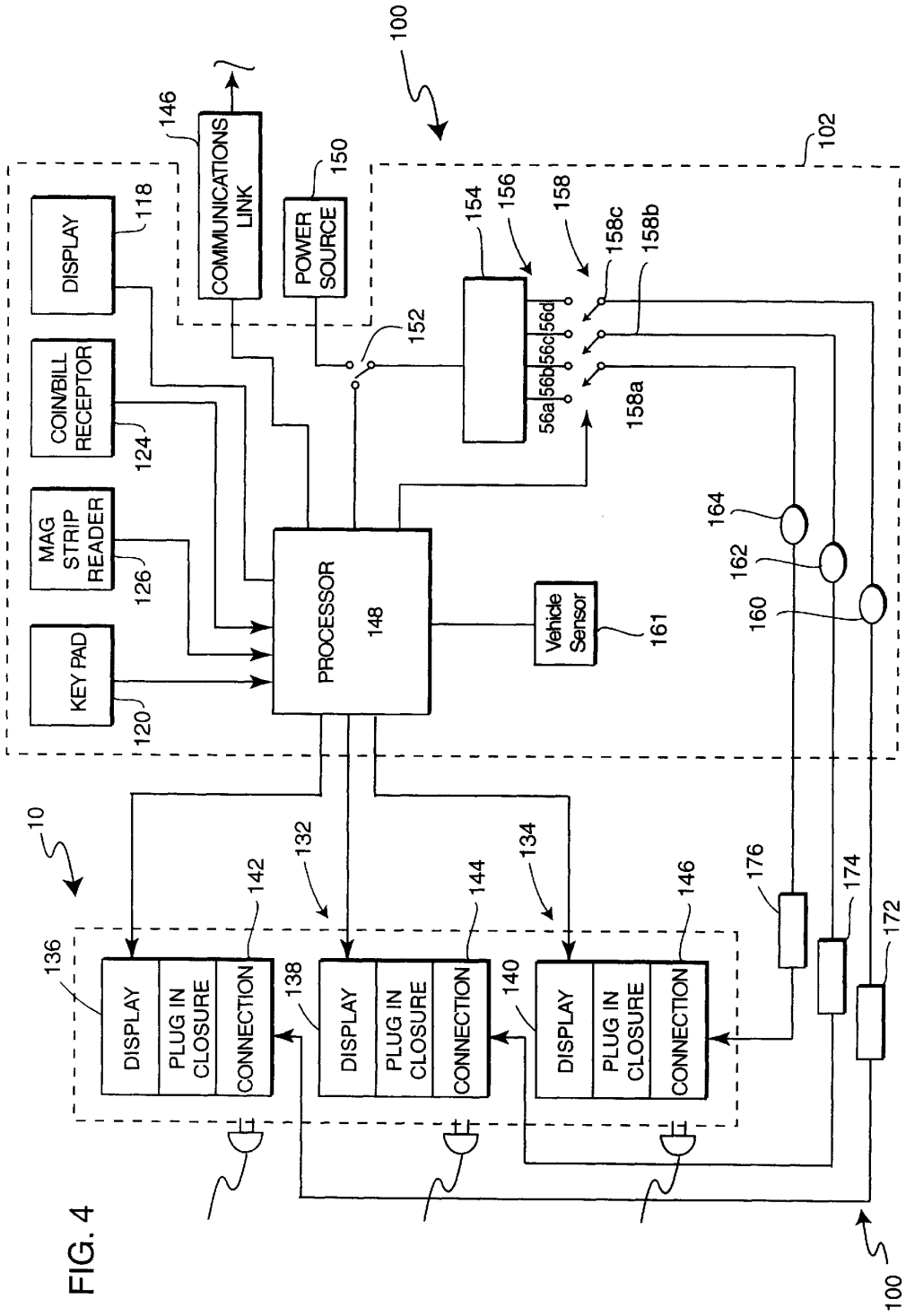
100
102
DISPLAY
118
COIN/BILL RECEPTOR
124
MAG STRIP READER
126
KEY PAD
120
COMMUNICATIONS LINK
146
POWER SOURCE
150
152
154
156
158
158c
158b
158a
56a
56b
56c
56d
PROCESSOR
148
Vehicle Sensor
161
160
162
164
10
136
DISPLAY
PLUG IN CLOSURE
CONNECTION
142
138
132
144
140
134
146
176
174
172
100

FIG. 4

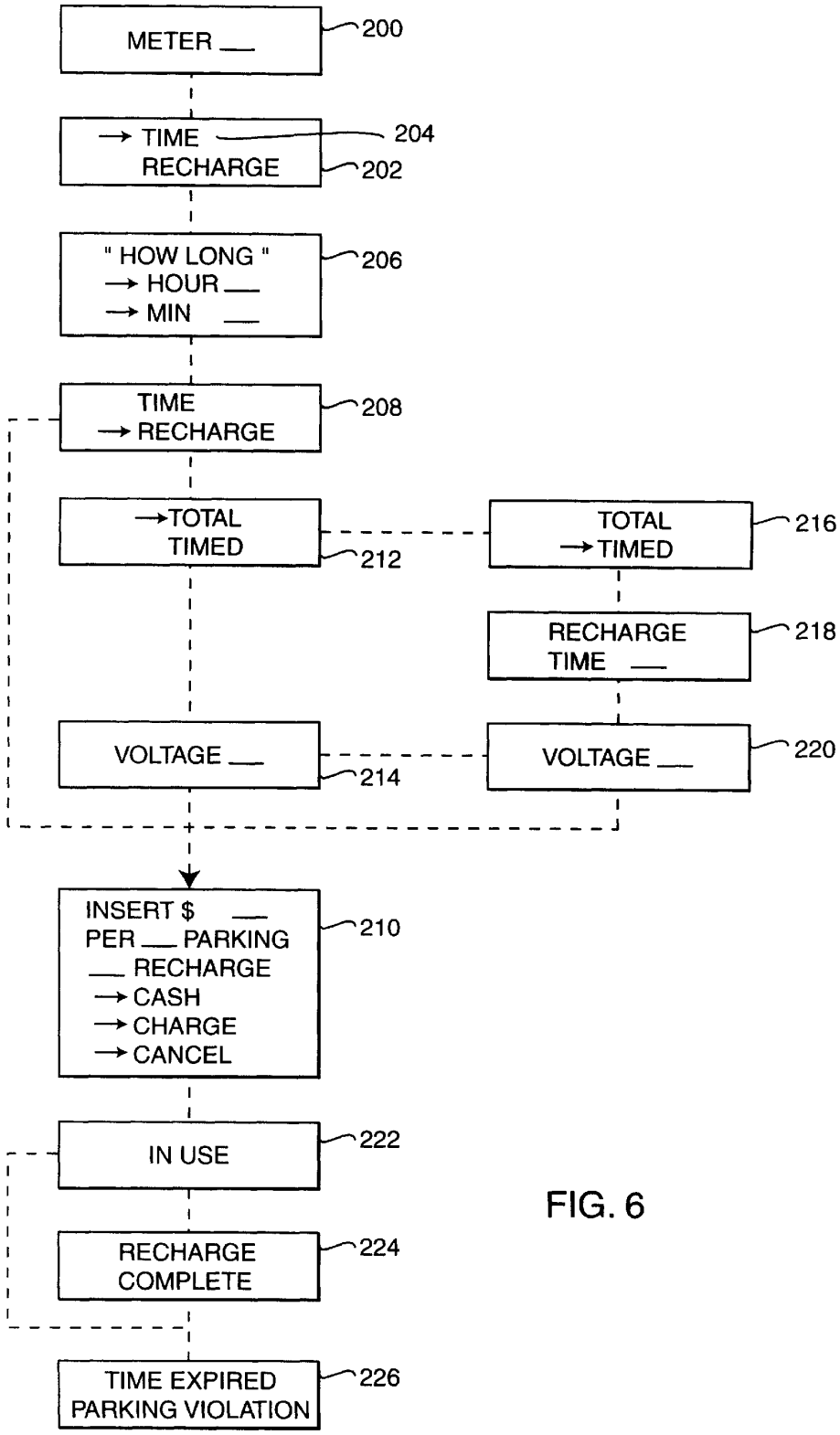
METER __
200
→ TIME
RECHARGE
204
202
" HOW LONG "
→ HOUR __
→ MIN __
206
TIME
→ RECHARGE
208
→TOTAL
TIMED
212
TOTAL
→TIMED
216
RECHARGE
TIME __
218
VOLTAGE __
214
VOLTAGE __
220
INSERT $ __
PER __ PARKING
__ RECHARGE
→ CASH
→ CHARGE
→ CANCEL
210
IN USE
222
RECHARGE
COMPLETE
224
TIME EXPIRED
PARKING VIOLATION
226

FIG. 6

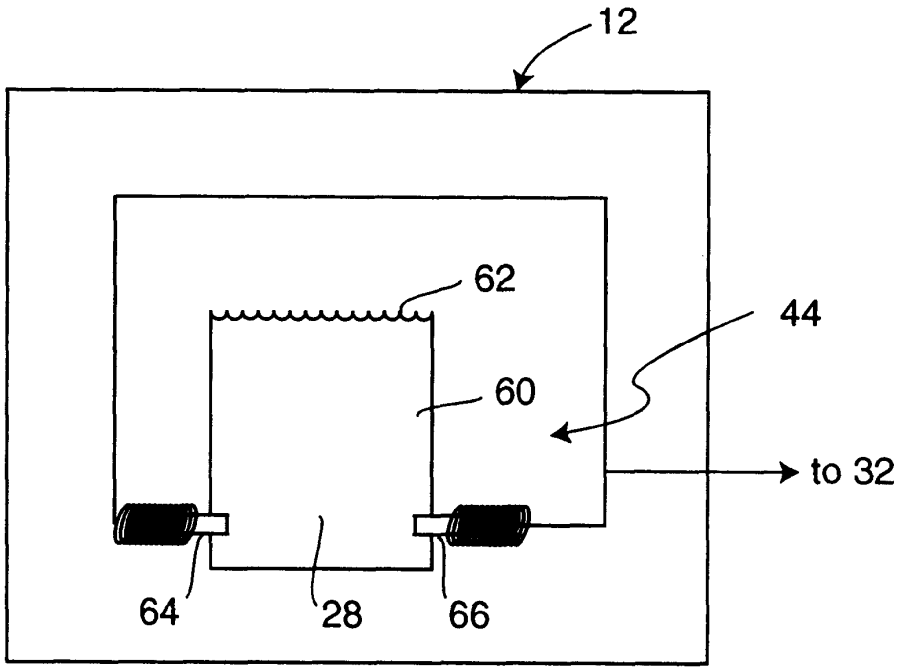

FIG. 7

ELECTRONIC PARKING METER AND ELECTRIC AUTOMOBILE RECHARGING STATION

This is a continuation of application Ser. No. 07/885,338 filed May 19, 1992, which was abandoned upon the filing hereof.

BACKGROUND OF THE INVENTION

The present invention relates to electronic parking meters and in particular to parking meters which can also be used as an electric car battery recharging station capable of providing various power levels depending on the requirements of the electric car batteries to be recharged.

Automobile battery charging has generally been accomplished using small portable charging devices. Such devices include small portable chargers commonly seen in automobile parts stores and gas stations, as well as generators and alternators driven by internal combustion engines. With the advent of electric automobiles, the requirements for such chargers has changed drastically. The number and size of batteries required for electric cars renders charging by standard methods unrealistic because of the amount of time required and the unavailability of convenient recharging stations. The result has been a new generation of chargers which have different power requirements and capacities.

These new chargers are sometimes mounted in the electric automobile itself. When an owner of the electric automobile needs to recharge the batteries, he drives the car into his garage and plugs the onboard charger into the household electric current. Generally, such chargers take several hours to recharge electric automobile batteries with the time required related directly to the current and voltage available to the batteries. Since it is necessary to match current requirements and charging voltage to the vehicle batteries for the most efficient charging mode, chargers generally have one or more step-up or step-down transformers included in their circuitry. If one desired to increase charging speed, it would necessitate larger voltages and currents, with resultant larger transformers and related circuitry. Since electric automobiles are sensitive to weight, and since larger transformers are generally quite heavy, it is unlikely such increased capacity chargers will be placed in the electric vehicle.

Currently, power available to recharge vehicles is restricted to the owner's home or possibly the owner's office. Since electric automobiles using current technology have to be recharged every 75–200 miles of operation, a problem exists which severely limits the realistic use of electric automobiles.

Public availability of recharging facilities and power sources simply does not exist.

SUMMARY OF THE INVENTION

The present invention is an electric vehicle recharging parking meter which includes a parking meter, a processor, a display interconnected to the processor for giving visual information to a user, and an input device interconnected to the processor. The input device enables the user to select the parking time and/or the recharging time for the electric vehicle. The processor is responsive to the user selection of recharge time, parking time, and recharge power requirements entered on the input device by the user. A payment receptor for receiving payment for the parking and recharge time selected by the user is interconnected to the processor for indicating receipt of payment for parking time and

recharge electricity. The processor enables a switch to close so that power will be supplied to the vehicle from a power source. A connector is attached to a post or stand on which the meter may be mounted whereby the electric vehicle can be interconnected to the power source. A power controller is interconnected between the power source and the connector and is coupled to be controlled in response to signals from the processor. The power controller selectively provides power to the connector in response to commands from the processor.

The parking meter may include a support post on which a housing is mounted, with the display, input device, payment receptor and connector being mounted in the support post housing.

The power controller may include a transformer coupled to the power source for converting the power from the power source to power having a voltage compatible with the electrical vehicle and a voltage selector switch which operates to interconnect the proper voltage to the connector in response to commands from the processor.

The payment receptor can be a coin device as on vending machines or may be a credit card magnetic strip reader like those used in restaurants. In such a case, a communications link will be coupled between the magnetic strip reader and an approval center so that the credit card information read by the magnetic strip reader can be approved by the approval center and charged to the account of the user.

Suitable safety devices can also be incorporated into the meter. For example, a ground fault interrupt switch can be interconnected between the power source and the remainder of the system to cut off power to the parking meter system in the event of an accident or damage to the meter system. Alternatively, the system may include a mercury type position switch in the power circuit. The mercury switch is mounted in the post of the meter and would disconnect the power supply power if a vehicle ran into the support post bending it to a non-vertical position.

In another embodiment, the invention can be a system of individual meters interconnected to a central unit. The processor, display, input device and payment receptor are a part of the central unit with the plurality of parking meters interconnected to the central unit for being controlled by the central unit. Each individual parking meter then includes the connector for interconnecting the power source to the electric vehicle and a separate display for providing visual information to the user. A power controller is interconnected between the power source and the connector of each of the plurality of parking meters and is operable in response to signals from the processor for selectively providing power to the plurality of connectors.

The present invention can also be used without the power recharge feature and as such may be used solely as a parking meter or parking meter system.

BRIEF DESCRIPTION OF THE DRAWINGS

A complete understanding of the present invention and of the above and other objects and advantages thereof may be gained from a consideration of the following description of the preferred embodiment taken in conjunction with the accompanying drawings in which:

FIG. **1** is an illustration of a parking meter in accordance with the invention.

FIG. **2** is a block diagram of a parking meter system which utilizes the parking meter of FIG. **1**.

FIG. **3** is an alternative embodiment of the parking meter system wherein a plurality of individual meters are controlled by a central unit.

FIG. **4** is a block diagram of the parking meter system depicted in FIG. **3**.

FIG. **5** is a simplified illustration of a keypad which could be used in conjunction with the parking meter shown in FIG. **1** or the central unit shown in FIG. **3**.

FIG. **6** is a simplified block diagram illustrating the display messages provided by the processor to facilitate use of the parking meter system.

FIG. **7** is a simplified diagram of an access device covering the connector of each parking meter to prevent access to the connector absent meeting certain predefined criteria.

DETAILED DESCRIPTION

Turning initially to FIG. **1**, a parking meter **10** in accordance with the invention includes a housing **12** positioned on top of a post **14** which is mounted in a conventional manner on the ground **16** adjacent a parking space at a street curb or in a parking lot. The parking meter **10** includes a display **18** which displays information about the meter status and provides instructions to a user as to the operation of a parking meter **10**. The parking meter **10** also includes a keypad **20** which has a plurality of keys **22** which may be depressed in response to information on the display **18** to enable user control of the parking meter. A money receptor slot **24** into which a user can insert payment for parking time and the electrical power to be used to recharge an electric car is also mounted in the housing **12**. The money receptor **24** may be either a coin or token slot or a paper bill receptor of a type commonly available to receive bills and give change.

The parking meter **10** may also include a credit card receptor slot **26** which is part of a magnetic strip reader or other card reader whereby the user can pay for either parking time or electricity to recharge an electric car by simply inserting a credit card into the slot **26**. The parking meter also has a connector **28** into which a plug **46** and electric power cord **47** from an electric vehicle **48** can be inserted to transfer power from the meter **10** to recharge the batteries of the electric vehicle **48**.

In one embodiment, the parking meter **10** may also include a solar cell panel **30** which may be interconnected to power the electronics in the parking meter including the display **18**, if the display is electronic, the keypad **20**, if interconnected as part of an electronic circuit, or any other electronics which may be a part of the parking meter operation.

Turning to FIG. **2**, one embodiment of the parking meter system **10** includes the keypad **20** which provides electronic signals to a processor **32** to cause the processor **32** to generate control signals to various other components of the parking meter **10**. A magnetic strip reader **40** is also provided with the credit card receptor slot **26** to receive credit cards **27** and read, for example, identifying information from a magnetic strip **29**. Magnetic strip readers which may be utilized are well known and are conventionally used in restaurants to read and transmit identifying information from the magnetic card and the amounts to be charged inputted via the keypad **20** via a suitable communications link, such as link **34**, to a central clearing computer such as central computer **36**. The central computer **36** can also provide information to the processor in response to transmission of credit card information.

Of course, the processor **32** could also accumulate the credit card identity and information as to the amount to be charged in a memory. That information would then read out or be transferred via a connector to a portable memory carried by a meter maid in response to the insertion of a specially coded credit card into the mag strip reader or some other memory and collected device. Alternatively, the processor **32** could be programmed to store prepaid time and then charge any use charges against that prepaid time and permit operation of the meter based on the prepaid time in a manner much like that used to pay for photocopies in libraries and the like.

A parking meter in accordance with the invention also includes a money receptor **42** which includes a coin, bill or, token receptor slot **24**. Similar coin, bill, or token receptors **42** are found in numerous devices such as vending machines wherein the amount of money inserted is sensed and that sensed quantity transmitted to the processor **32** which then sends appropriate signals to various switches to turn on or turn off electric power or to the display to indicate parking time and subsequently parking time termination. The processor **32** is also coupled to a plug-in closure apparatus **44** to be described hereafter which provides a physical cover over the connector **28** to prevent insertion of the plug **46** from the car **48** unless a credit card has been inserted in the credit card slot **26** of the magnetic strip reader or money has been inserted in the money receptor **42**.

The processor **32** is also interconnected to the display **18** which may be an LCD display or any other suitable display to instruct the user on what information is required and how to insert that information via the keypad **20** in a manner to be described hereafter.

Power to recharge the vehicle **48** is provided through a power source **50** which may be connected to power lines, power storage device such as a battery, or other power source such as solar cells, wind generators or any other suitable power-generating apparatus. The power from power source **50** may be interconnected to a transformer **54** which transforms the power from the power source **50** into power at a desired voltage, frequency or current to match the requirements of the electric vehicle **48** as may be defined by the user through keypad **20**. The power from power source **50** is coupled to the transformer **54** through a switch **52** which is actuated in response to a signal from the processor **32**. For example, the processor **32** could be programmed to close switch **52** allowing power from the power source **50** to charge a vehicle **48** only if a credit card **27** had been inserted into the reader **40** or the required money for a vehicle recharge had been deposited in the receptor **42**.

The transformer **54** has a plurality of output leads **56** each of which provides electricity at a different voltage. A switch **58** is then interconnected to select one of the voltage leads **56** in response to a signal from the processor **32**. For example, the processor **32** may be programmed to provide information to the display **18** instructing the user to select a particular voltage (or frequency or current) level using the keypad **20**. Once the voltage select information from the keypad **20** was received by the processor **32**, the processor would generate a signal which would actuate the switch **58** to select the appropriate lead **56***a*, **56***b*, **56***c* or **56***d* corresponding to the voltage (or frequency or current) level selected.

The parking meter **10** may also include a power meter or sensor **60** which accumulates the kilowattage of electrical power passing from the transformer **54** to the electrical connector **28**. The power meter **60** is interconnected to the processor **32** to provide power usage information to the processor **32** which can be programmed to deactivate switch **52** or to provide information to the display **58** when the power consumption has reached a particular quantity. For

example, a user could select a particular number of kilowatts of electricity to be used to recharge the vehicle **48** by following instructions displayed on the display **18** and inserting the kilowattage of electricity to be used on keypad **20**. That value would then be received by the processor **32** and continuously compared with the actual power usage supplied from the power meter **60** until a match occurred at which point the processor would generate a signal opening the switch **52** and terminating any further electrical usage to charge the batteries of the vehicle **48**.

In another embodiment, a recharge regulator **62** could be interposed between the power meter **60** and the electrical connector **28**. The recharge regulator **62** would terminate the flow of electricity through the electrical connector **28** when the batteries of the electrical vehicle **48** were fully charged. The processor **32** could then read the amount of power utilized to recharge the vehicle from the power meter **60** after which a computation of power cost could be made and automatically charged to the credit card account via communications link **34**. Alternatively, the processor **32** could indicate the amount of money to be deposited on display **18** at which point the user would deposit the appropriate amount of money in the receptor **42** or in the reader **40**.

The processor **32** can be any of a number of well-known digital processor which can be programmed to provide signals to switches **52** and **58** and the display **18** in response to data received from the keypad **20**, the reader **40**, the receptor **42** and the power meter **60**. The transformer **54** is likewise a conventional transformer well known in the art which would be selected to provide the desired electricity to the electrical connector **28** to recharge the electric vehicle **48**. Likewise, the power meter **60** would be any conventional power meter such as those used to measure the power used in homes with the recharge regulator also being a conventional device used, for example, in conventional recharging mechanisms used to recharge golf carts and the like.

The system **10** may also include a vehicle presence sensor **61** in the parking space adjacent the meter. This sensor may be a sensor of the type imbedded in roadways adjacent intersections and used to trigger the change of the intersection light.

The parking meter **10** may include a plug-in closure device **44** which may, for example, be a device such as that illustrated in FIG. **7** wherein the access to the connector **28** of the housing **12** is limited by a cover **70** hinged by a hinge **72** to the housing **12** at a location where it will pivot over the connector **28** and prevent access unless the cover **70** is pivoted upward. A pair of solenoid latches **74** and **76** are mounted to the housing **12** and are positioned to engage suitable slots orifices or other latching mechanisms in the cover **70**. The solenoids **74** and **76** are then interconnected to the processor **32**. Consequently, when the appropriate amount of money has been inserted in the receptor **42** or a credit card has been inserted in the reader **40**, the processor **32** will generate a signal which will cause the solenoid latches **74** and **76** to be actuated releasing those solenoid latches from engagement with the cover **70** and permitting the cover to be pivoted about hinge **72** to allow the plug **46** to be inserted in the connector **28**.

Various safety devices may also be incorporated into the system. For example, one or more interrupt switches such as a ground fault interrupt switch **63** (FIG. **2**) may be incorporated in the power circuitry. Thus, if a parking meter is damaged or a short circuit occurs, the switch **63** will automatically disconnect the power source from the parking meter system or a portion of the parking meter system. If the processor and other related components are also powered by the power source then the switch **63** could be positioned to disconnect all power including processor power or could be positioned to disconnect just the power to the connector. Referring to FIG. **1** again, the interrupt switch could also be a conventional mercury switch **23** mounted in the post **14** or at any other suitable location. Thus, if the post **14** is hit by a vehicle and moves out of a vertical position, the switch **23** will disconnect the power from the power source to the connector **28**.

Referring to FIG. **3**, a multiple meter recharge system **100** is illustrated including a central unit **102** which includes a display **118**, a keypad **120**, a credit card receptor slot **126** and a money receptor slot **124**. The central unit **102** is interconnected to each of a plurality of meters **130**, **132** and **134** which have displays **136**, **138** and **140** and connectors **142**, **144** and **146** respectively. The plurality of meters are mounted on a parking or recharge island **150** and are electrically interconnected to the central unit **102**.

In operation, a user of one of the meters, such as meter **130**, will provide the required information for that particular meter by inserting the information through the central unit **102**.

Referring to FIG. **4**, a block diagram of the parking meter system **100** includes the central unit **102** interconnected to the individual parking meters **130**, **132** and **134**, although any number of parking meters may be utilized. Also, as described in connection with FIGS. **1**, **2** and **7**, each of the connectors **142**, **144** and **146** may include an access control cover to prevent interconnecting a plug from an electrical car into the connector.

The operation of the system of FIG. **4** is similar to that described in connection with FIG. **2** except that the information controlling the dispensing of electrical power, selection of parking time and payment of money for the power and/or parking time is controlled from the central unit **102** rather than from the individual parking meters. As such, the central unit has a keypad **120**, a magnetic strip or other card reader **126**, a coin/bill receptor **124** and a display **118**. The processor **148** provides signals to the display **118** to instruct the user on how to input data such as selecting the particular parking meter to be used, the amount of electrical wattage to be dispensed, the amount of parking time required and the voltage or other electrical parameters which must be set so that the particular electrical requirements of the vehicle will be matched to the charging electricity from the power source **150**. The processor **146** receives data as to payment for parking time or electricity from either the receptor **124** or the mag strip reader **126**. Other instructions are received from the keypad **120** which is actuated in response to inquiries provided on the display **118** in response to the processor **148**.

As described in connection with FIG. **2**, the processor **148** may be interconnected to a communications link **146** to provide credit card approval or any other remote communications required or useful in controlling the operation of the meter system illustrated in FIG. **4**. As in FIG. **2**, a power source **150** is interconnected to each of the connectors **142**, **144** and **146** of each of the remote parking meters **130**, **132**, and **134** through a switch **152**, a transformer **154**, a power select switch **158**, a plurality of power meters **160**, **162** and **164**, one for each parking meter **146**, **144** and **142**, and a plurality of recharge regulators, **172**, **174** and **176**, one for each parking meter **146**, **144**, and **142**. The processor **148** provides commands to switches **152** and **158** to respectively turn on or turn off the power and to select the required

voltage (current or frequency) from the transformer **154** for a selected meter to which that power is to be supplied.

For example, the processor **148** may be programmed to close the switch **152** and thereby connect the power source **150** to one or more of the connectors **142**, **144** and **146** in response to payment for power and parking time via the magnetic strip reader **126** or the coin/bill receptor **124**. When the processor **148** senses the payment has been received, the processor **148** generates a signal to close the switch **152** to couple the power source **150** to the transformer **154**.

The selection of the particular voltage (current or frequency) occurs by the user inserting the required power parameters via the keypad **120**. The processor **148** then generates a signal which selects one of the lead **156***a,* **156***b,* **156***c,* or **156***d* which provides the selected power parameters. In conjunction with this voltage selection, it is also necessary for the processor **148** to know which meter the selected power is to be provided to. Accordingly, before the processor can interconnect a particular voltage to a particular meter, the user must input a selection as to the meter via keypad **120**. Therefore, the processor **148** will first select the particular switch **158***a,* **158***b* or **158***c* depending on which meter is selected by the user via keypad **120**. The processor will then move the selected switch **158***a,* **158***b* or **158***c* to the desired voltage terminal **156***a,* **156***b,* **156***c,* or **156***d* according to the voltage selection by the user via keypad **120**. Switch **158***a* is then connected to connector **146** via power meter **164** and recharge regulator **176**; switch **158***b* is interconnected to connector **144** via power meter **162** and recharge regulator **174**; and switch **158***c* is interconnected via power meter **160** and recharge regulator **172** to connector **142**. Each of the power meters **160**, **162** and **164** provides information as to the quantity of power used to the processor **148** in the same manner described in connection with FIG. **2**.

Referring to FIGS. **4**, **5** and **6**, an illustration of how the processor may be programmed to operate to dispense both parking time and power usage will now be described. In FIG. **6**, each block illustrates a different message to be displayed on display **118** in response to commands from processor **148**. Initially, the displays **136**, **138** and **140** on the meters may show a "violation" message indicating that any vehicle parked in that space is in violation and subject to being ticketed as occurs with conventional parking meters.

When a user enters a parking space adjacent the appropriate parking meter, the user will exit his car noting the identifying number of the meter adjacent the parking space and will go to the central unit **102**. The display **118** (FIG. **3**) might initially request the user to insert the meter number by depressing the appropriate keys on the keypad illustrated in FIG. **5** and then pressing the "enter" button. If the user makes an error at any time in the selection process, the user can simply press the clear button which will cause the display **118** to again request the meter number as illustrated by block **200** in FIG. **6**. Once the user has selected the particular meter via keypad **120**, the processor **148** might next display a "time" or "recharge" option indicating either parking time or recharge time. The user, using the cursor control buttons **300** and **302** on the keypad **120** (FIG. **5**), will move the pointer **204** to either indicate "time" or "recharge." If the pointer is moved to "time" and the operator presses the "enter" button on keypad **120**, the processor **148** will cause the display **118** to display a message requesting the hours and minutes of parking time (block **206**) after which the user will first insert a number indicating the number of hours of parking time desired and then the number of minutes desired via keypad **120**. Once this information has been provided and is displayed on display **118**, the user will again press the "enter" button **304**. The processor **128** will next again display the "time" and "recharging" options (block **208**). The user then has the option of selecting the "recharge" or "no recharge" options. If the user selects the "no recharge" option, the processor immediately displays a request for the user to insert a particular amount of money based upon the parking time (block **210**). If the user selects a "recharge" option in block **208**, the processor will display (block **212**) a request for the user to select either a total recharge or a particular amount of time for recharging. If the user selects a total recharge then the processor requests the user to insert the voltage (or other power parameters) in block **214**. When the user inserts the amount of the voltage through keypad **120**, the processor **148** again causes the display **118** to request insertion of either a specific amount of money or request that a charge card be inserted if the amount is indefinite and cannot be determined until after recharging has been completed. If the user in response to the request in block **212** selects a timed recharge as illustrated in block **216**, again using the cursor control buttons **300** and **302** and the enter button **304** on the keypad **120**, the processor causes the display **118** to request the user to insert the recharge time (block **218**). The user inserts that selected time via the keypad and then again presses the enter button **304** after which the processor causes the display **118** to request the user to insert the voltage (block **220**).

At this juncture, the user has inserted all of the information required for the processor to compute the cost of both parking and recharge. Alternatively, if a total recharge is requested and a recharge cost cannot be determined in advance, the processor could be programmed to require that payment be made by charge card with the amount charged to the card determined after recharging has been completed. Again, whenever a charge card is used, the keypad **120** can be used to permit the user to insert a PIN number with the communications link **146** then being similar to those presently used in gas stations to dispense gasoline or at automatic teller machines used by banks.

Turning again to FIG. **6**, the processor will display in block **210** the amount of money required and may inform the user of the amount of parking time selected and the amount of recharge time selected. The same display can provide cursor selection using cursor keys **300** and **302** to allow the user to pay either by cash via the receptor **124**, or by charge card using the mag strip reader and the keypad **120** if a PIN number is to be required. The user will then make the appropriate selection and insert payment into the receptor **120** or the reader **126** at which point the display on the particular meter selected will indicate that it is in use or will optionally indicate the amount of time remaining or the amount of recharge time remaining in block **222**. Either the same or separate display provided by the processor **148** may also indicate when the recharge has been completed (block **224**). When the time has expired the display can indicate a parking violation **226**. Optionally, if the maximum amount for parking is to be paid indicating unlimited time, then the processor will not display a parking violation as depicted in block **226**.

Yet another option is to provide unlimited parking but to determine the amount to be charged for that parking by incorporating a sensor such as the vehicle sensor **61** in FIG. **2** or the vehicle sensor **161** in FIG. **4** which registers and charges a credit card for example with the total fees for parking and recharging when the car is removed from the parking spot in front of the meter. Sensors of a type which

could be used for vehicle sensors **61** and **161** in FIGS. **2** and **4**, respectively, include pressure or magnetic sensors imbedded in the asphalt adjacent the meter similar to those imbedded in roadways and used to trip traffic lights.

While specific embodiments of the present invention have been described it will be appreciated that many other options are possible. In particular, the processor **148** may be programmed in any desired way to sequence through a series of instructions and information requests. Also it will be appreciated that while the sequence of FIG. **6** has been described in connection with the system depicted in FIG. **4**, a similar sequence could be implemented for the processor **32** in FIG. **2**. The only difference being that the identity of the meter requested in block **200** would be unnecessary. Also the mag strip reader could be a reader which obtains information from any medium including optical readers, audio tone detectors and the like.

The embodiment of the invention set for above are described as being of electronic type. However, the processor within the invention may be implemented as a mechanical device with the various function being performed mechanically. In such an embodiment, the mechanical "processor" can include a clock, various mechanical switches actuated in response to the insertion of money or depression by a user to select voltage recharge levels. Also, the input device could be configured so that insertion of a coin or token in one of several slots would define the amount of parking time and charge voltage depending on the particular slot used and the value of the token or coin inserted.

What is claimed is:

1. An electric vehicle recharging parking meter comprising:

a processor;

a display interconnected to the processor for giving visual information to a user;

an input device interconnected to the processor for enabling the user to select a recharging time for the electric vehicle and a parking time, the processor being responsive to the user selection entered on the input device to select the time for parking and the time for recharging the vehicle;

a payment receptor for receiving payment for the parking and recharge time selected by the user, the payment receptor interconnected to the processor for indicating receipt of payment for parking time and recharge electricity;

a power source;

a connector for interconnecting the power source to the electric vehicle;

a power controller interconnected between the power source and the connector and coupled to the processor, the power controller selectively providing power to the connector in response to commands from the processor, the power controller further comprising a sower meter for measuring the amount of electricity flowing therethrough;

a vehicle presence sensor positioned in a vehicle parking space associated with the parking meter and interconnected to the processor for sensing when a vehicle is removed from the parking space associated with the meter, the vehicle presence sensor comprising means for resetting the meter when the vehicle is removed from the parking space, thereby to reset the unused recharge time to a condition prior to the user selection of the recharge time entered on the input device; and

an interrupt switch, interconnected between the power supply and the connector for disconnecting the power from the connector.

2. The electric vehicle recharging parking meter of claim **1** further comprising a support post, the display, input device, payment receptor and connector being mounted on the support post.

3. The electric vehicle recharging parking meter of claim **1** wherein the power source comprises solar panel means for generating electrical power from the sun and means for storing the power generated by the solar panel means.

4. The electric vehicle recharging parking meter of claim **1** wherein the power source comprises a wind generator for generating electrical power from the wind and means for storing the power generated by the wind generator.

5. The electric vehicle recharging parking meter of claim **1** wherein the power controller further comprises:

a transformer coupled to the power source for converting the power from the power source to power having a voltage compatible with the electrical vehicle; and

a voltage selector coupled to the transformer and operable in response to commands from the processor for selecting the voltage compatible with the electrical vehicle.

6. The electrical vehicle recharging parking meter of claim **1** wherein the interrupt switch is a ground fault interrupt switch.

7. The electric vehicle recharging parking meter of claim **2** further comprising an interrupt switch sensitive to movement, the interrupt switch being interconnected between the power supply and the connector for disconnecting the power from the connector in response to movement of the parking meter.

8. The electric vehicle recharging parking meter of claim **1** wherein the input device is a keypad.

9. The electric vehicle recharging parking meter of claim **1** wherein the payment receptor comprises a cash receptor, the cash receptor coupled to the processor for communicating the amount of cash inserted by the user in the cash receptor.

10. The electric vehicle recharging parking meter of claim **1** wherein the payment receptor comprises a card reader.

11. The electric vehicle recharging parking meter of claim **10** further comprising a communications link coupled between the card reader and an approval center for communicating the card information read by the card reader to the approval center and receiving approval for the card usage from the approval center.

12. The electric vehicle recharging parking meter of claim **1** wherein the power controller further comprises a recharge regulator interconnected between the power source and the connector for terminating the recharge of the electrical vehicle when the batteries of the vehicle are fully charged.

13. The electric vehicle recharging parking meter of claim **1** wherein the connector further comprises:

a housing for the connector;

a cover hinged to the housing adjacent to the connector for pivoting between a closed access position covering the connector and an opened access position;

a solenoid actuated latch apparatus connected to the housing and comprising at least one bolt for moving into engagement with the cover when the cover is in the closed access position for preventing movement of the cover from the closed access position and at least one solenoid interconnected to the bolt for enabling movement of the bolt, the solenoid coupled to the processor whereby the cover is enabled to pivot between the

closed access position and the opened access position in response to command from the processor.

14. A parking meter system comprising:

a central unit comprising:

a processor;

a display interconnected to the processor for giving visual information to a user;

an input device interconnected to the processor for enabling the user to select a recharging time for the electric vehicle and a parking time, the processor being responsive to the user selection entered on the input device to select the time for parking and the time for recharging the vehicle;

a payment receptor for receiving payment for the parking and recharge time selected by the user, the payment receptor interconnected to the processor for indicating receipt of payment for parking time and recharge electricity;

a power source; and

a plurality of parking meters each interconnected to the central unit for being controlled by the central unit, each parking meter comprising:

a connector for interconnecting the power source to the electric vehicle;

a display interconnected to the processor for providing visual information to the user;

a power controller interconnected between the power source and the connector of each of the plurality of parking meters and operable in response to signals from the processor for selectively providing power to the plurality of connectors in response to the processor, the power controller further comprising a plurality of power meters, one associated with each parking meter for measuring the amount of electricity flowing therethrough to the associated parking meter;

a vehicle presence sensor positioned in a vehicle parking space associated with each parking meter and interconnected to the processor for sensing when a vehicle is removed from a parking space associated with a meter, the vehicle presence sensor comprising means for resetting the meter when the vehicle is removed from the parking space, thereby to reset the unused recharge time to a condition prior to the user selection of the recharge time entered on the input device.

15. The parking meter system of claim **14** wherein the power controller comprises:

a transformer coupled to the power source for converting the power from the power source to a plurality of voltages; and

a selector coupled to the transformer and operable in response to commands from the processor for selecting a parking meter to which power is to be supplied and further selecting one of the plurality of voltages and interconnecting that selected voltage to the selected parking meter.

16. The parking meter system of claim **14** wherein the payment receptor comprises a magnetic strip reader for reading credit card information, the meter system further comprising a communications link coupled between the magnetic strip reader and an approval center for communicating the credit card information read by the magnetic strip reader to the approval center and receiving approval for the credit card usage from the approval center.

17. The parking meter system of claim **14** wherein the power controller further comprises a plurality of recharge regulators, one associated with each parking meter and interconnected between the power source and the connector for the associated parking meter for terminating the recharge of the electrical vehicle interconnected to the associated meter when the batteries of the vehicle are fully charged.

* * * * *